KLS ELECTRONIC CO; LTD

KLS

1-Connectors & Connector Components-Разъемы, соединители и их узлы

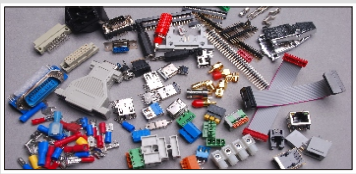

1-1 Wire to Board connectors
1-2 Board to Board connectors
1-3 Input/Output (Box to Box)
1-4 Socket & Card connectors
1-5 Power connectors
1-6 Audio & Video connectors
1-7 RF & Coax
1-8 Terminal Blocks & Strips
1-9 Terminals & Splices

More . . .

2-Wiring accessories & PCB parts & tubes-Кабельные аксессуары& PCB аксессуары



2-1 Wiring Ducts
2-2 Cable Markers
2-3 Cable Ties
2-4 Wrapping Bands
2-5 Cable Clamps
2-6 Bushings, Conducts
2-7 Cable clips
2-8 PCB Parts
2-9 LED spacers

More . . .

3-Buttons,Switches-Компоненты коммутации: выключатели, переключатели, кнопки

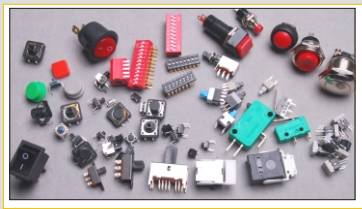

3-1 DIP switch
3-2 Tactile switch
3-3 Hook switch
3-4 Magnetic reed switches
3-5 Snap Action switches/Micro switches
3-6 Navigation joystick switches
3-7 Pushbutton switches
3-8 Rocker switches
3-9 Rotary switches
3-10 Slide switches

More . . .

4-Circuit Protection,Batteries & Accessory-Средства защиты цепей компоРент

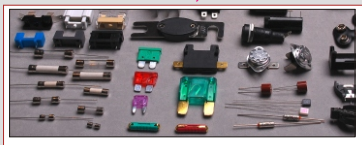

4-1 Circuit breakers
4-2 Glass & Ceramic fuse & Others
4-3 Fuseholders and Clips
4-4 Thermal Cutoffs, Cutouts
4-5 Gas Discharge Tube Arrestors (GDT)
4-6 PTC Resttable fuses

More . . .

5-Passive Components-Пассивные компоненты



5-1 Varistors
5-2 PTC thermistors
5-3 NTC thermistors
5-4 Resistors permanent
5-5 Potentiometers, Variable Resistors
5-6 Crystals and Oscillators
5-7 Capacitor
5-8 Inductors, Chokes & Coils
5-9 Transformer & Accessory

More . . .

6-Acoustic Components & Accessories -Акустика компоненты



6-1 Electromagnetic Buzzer/Passive
6-2 Electromagnetic Buzzer/Active
6-3 Piezoelectric/ceramic Buzzer/Passive
6-4 Piezoelectric/ceramic Buzzer/Active
6-5 Piezo Elements
6-6 SMD buzzer
6-7 Speakers
6-8 Receiver & Microphones
6-9 Tweeter driver
6-10 Hole & Handle & Horn & other accessory
6-11 Decoder Module

More . . .

7-Optoelectronics -ОПТОЭЛЕКТРОННЫЕ ПРИБОРЫ

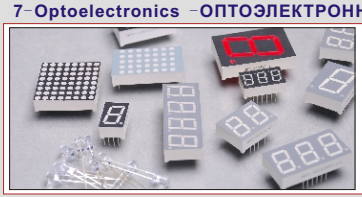

7-1 LED Character and Numeric
7-2 Dot Matrix
7-3 LED light bar
7-4 LED lamp
7-5 Infrared Product
7-6 LED Cluster
7-7 Indicator Switch
7-8 LCD Displays And Modules

More . . .

KLS CATALOG

2012. 1 VERSION

8 9 10 . . . . . .

KLS ELECTRONIC CO; LTD. WWW. CNKLS. COM Email: sales@cnkls. com
Tel: 0086 574 86824882 Fax: 0086 574 86824882

KLS

1-Connectors & Connector Components-Разъемы, соединители и их узлы

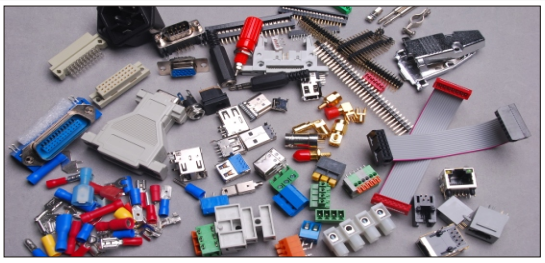

1-1 Wire to Board connectors
1-2 Board to Board connectors
1-3 Input/Output (Box to Box)
1-4 Socket & Card connectors
1-5 Power connectors
1-6 Audio & Video connectors
1-7 RF & Coax
1-8 Terminal Blocks & Strips
1-9 Terminals & Splices

More . . .

KLS

1-Connectors & Connector Components-Разъемы, соединители и их узлы

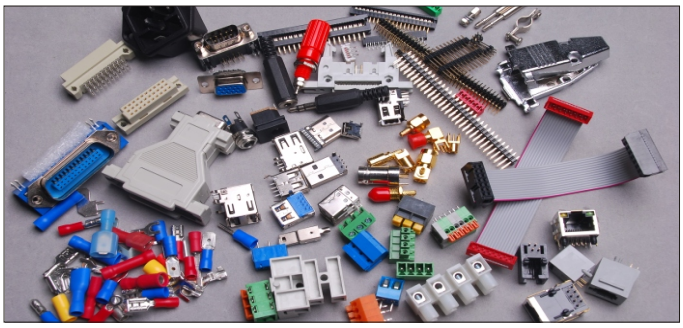

1-1 **Wire to Board connectors**
1-2 Board to Board connectors
1-3 Input/Output (Box to Box)
1-4 Socket & Card connectors
1-5 Power connectors
1-6 Audio & Video connectors
1-7 RF & Coax
1-8 Terminal Blocks & Strips
1-9 Terminals & Splices

More . . .



KLS ELECTRONIC CO; LTD. WWW.CNKLS.COM Email:sales@cnkls.com
Tel:0086 574 86824882 Fax:0086 574 86824882

KLS electronic
www.cnkls.com

I

PCB Connector Series

KLS1-XL1-1.25 Pitch=1.25mm TYPE

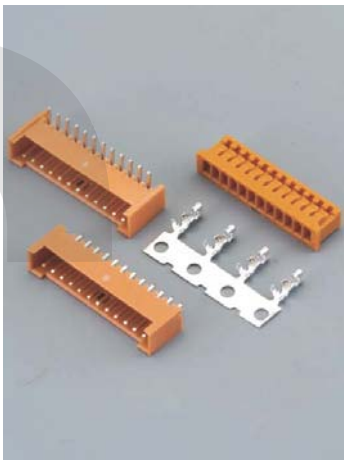

Electrical Specification:

Rated Voltage: 50/250V AC.DC
Rated Current: 0.7A 2A
Contact Resistance: 0.02 Ohm max
Insulation Resistance: 1000M Ohm min
Withstand voltage: 800V AC/MIN
Temperature range for usage : -25°C~+85°C
P.C board thickness : 0.8~1.6mm

Material:

Housing: PA66 (PA66) UL94V-2
Contacts: Brass or Phosphor Bronze
Plating: Tin 50u" over 100u" nickel
Wire range : AWG#32~#22
Straight and Right Male pin Material: brass / tin-plated

Housing

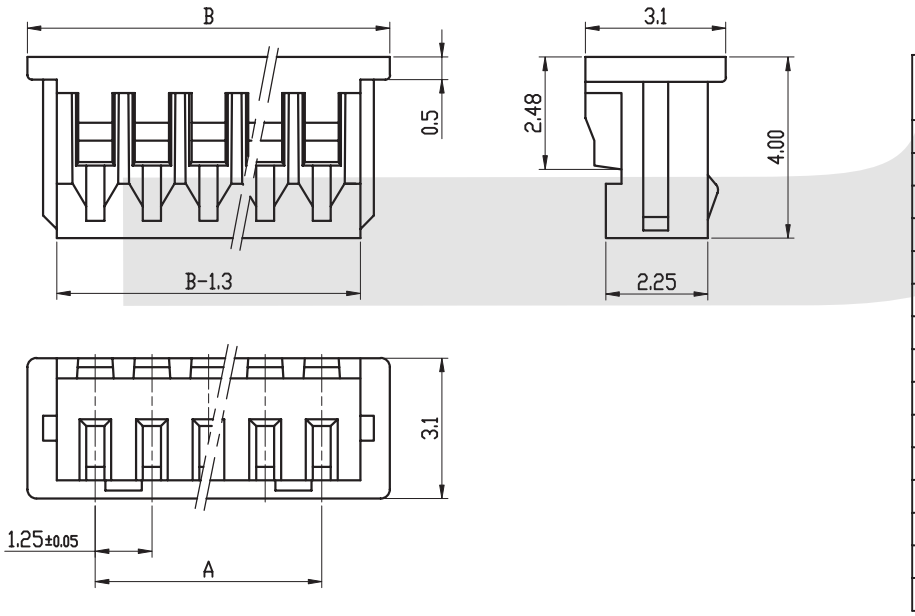

Poles	Dimensions mm	
	A	B
02	1.25	4.25
03	2.50	5.50
04	3.75	6.75
05	5.00	8.00
06	6.25	9.25
07	7.50	10.50
08	8.75	11.75
09	10.00	13.00
10	11.25	14.25
11	12.50	15.50
12	13.75	16.75
13	15.00	18.00
14	16.25	19.25
15	17.50	20.50
16	18.75	21.75

ORDER INFORMATION

Product NO.: KLS1-XL1-1.25-02-H

Series No.
Pitch: 1.25=1.25mm
PIN Number: 02 ~ 16Pin
Type: H=Housing
T=Terminal
S=Straight Male pin
R=Right Male pin

I

PCB Connector Series

KLS1-XL1-1.25 Pitch=1.25mm TYPE

Electrical Specification:

Rated Voltage: 50/250V AC.DC
Rated Current: 0.7A 2A
Contact Resistance: 0.02 Ohm max
Insulation Resistance: 1000M Ohm min
Withstand voltage: 800V AC/MIN
Temperature range for usage : -25°C~+85°C
P.C board thickness : 0.8~1.6mm

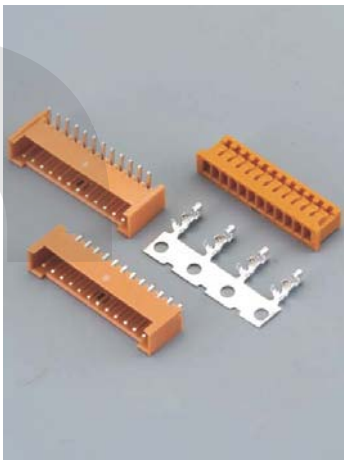

Material:

Terminal Material: Phosphor bronze Tin-plated
Wire Range: AWG # 32 ~ # 28
Plating: Tin 50u" over 100u" nickel

Terminal

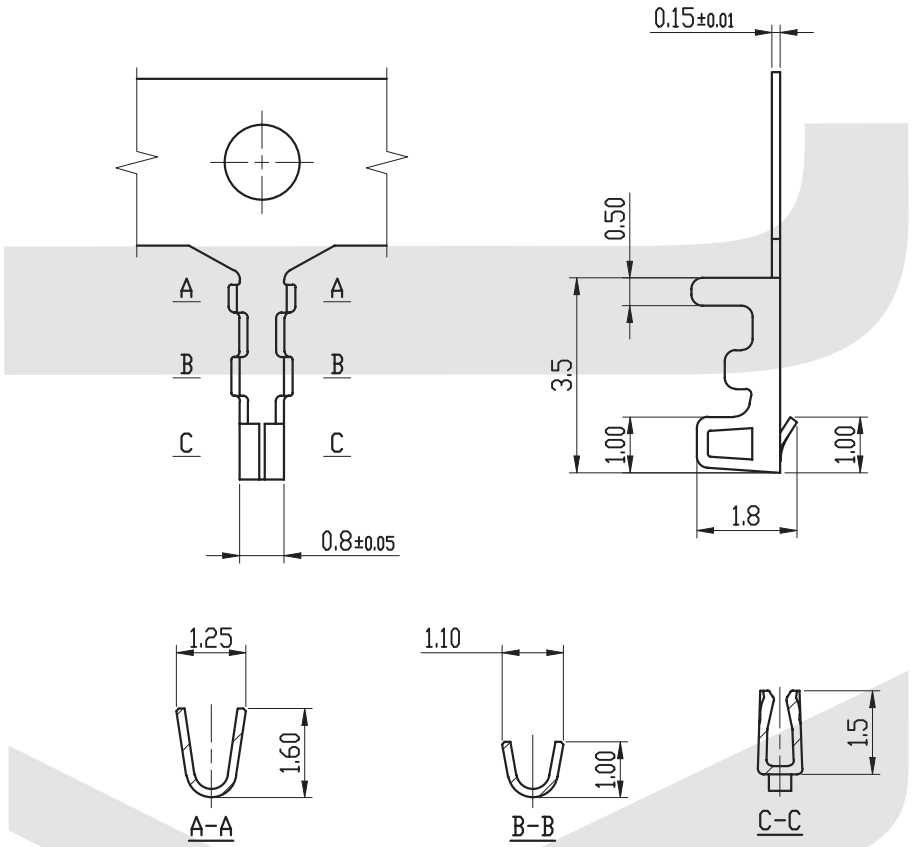

ORDER INFORMATION

Product NO.: KLS1-XL1-1.25-T

Series No.
Pitch: 1.25=1.25mm

Type: H=Housing
T=Terminal
S=Straight Male pin
R=Right Male pin

KLS electronic
www.cnkls.com

I

PCB Connector Series

KLS1-XL1-1.25 Pitch=1.25mm TYPE

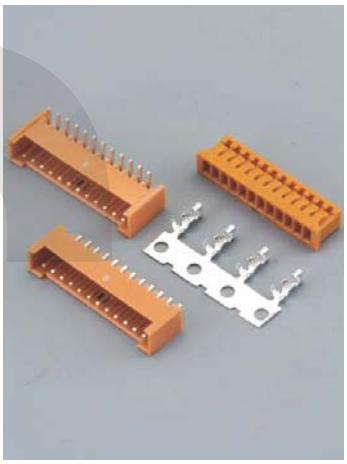

Electrical Specification:

Rated Voltage: 50/250V AC.DC
Rated Current: 0.7A 2A
Contact Resistance: 0.02 Ohm max
Insulation Resistance: 1000M Ohm min
Withstand voltage: 800V AC/MIN
Temperature range for usage : -25ºC~+85ºC
P.C board thickness : 0.8~1.6mm

Material:

Housing: PA66 (PA66) UL94V-2
Contacts: Brass or Phosphor Bronze
Plating: Tin 50u" over 100u" nickel
Wire range : AWG#32~#22
Straight and Right Male pin Material: brass / tin-plated

Straight Male Pin

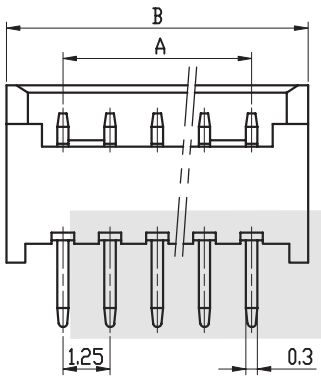

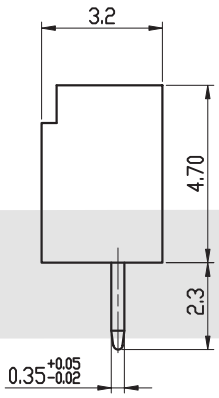

Poles	Dimensions mm	
	A	B
02	1.25	4.25
03	2.50	5.50
04	3.75	6.75
05	5.00	8.00
06	6.25	9.25
07	7.50	10.50
08	8.75	11.75
09	10.00	13.00
10	11.25	14.25
11	12.50	15.50
12	13.75	16.75
13	15.00	18.00
14	16.25	19.25
15	17.50	20.50
16	18.75	21.75

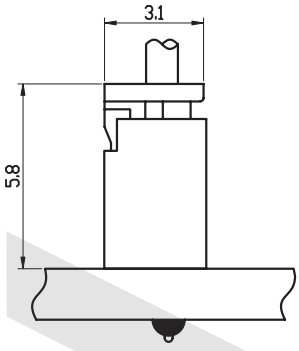

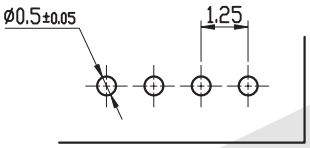

P. C. B LAYOUT

ORDER INFORMATION

Product NO.: KLS1-XL1-1.25-02-S

Series No.
Pitch: 1.25=1.25mm
PIN Number: 02 ~ 16Pin
Type: H=Housing
T=Terminal
S=Straight Male pin
R=Right Male pin

PCB Connector Series

KLS1-XL1-1.25 Pitch=1.25mm TYPE

Electrical Specification:

Rated Voltage: 50/250V AC.DC
Rated Current: 0.7A 2A
Contact Resistance: 0.02 Ohm max
Insulation Resistance: 1000M Ohm min
Withstand voltage: 800V AC/MIN
Temperature range for usage : -25ºC~+85ºC
P.C board thickness : 0.8~1.6mm

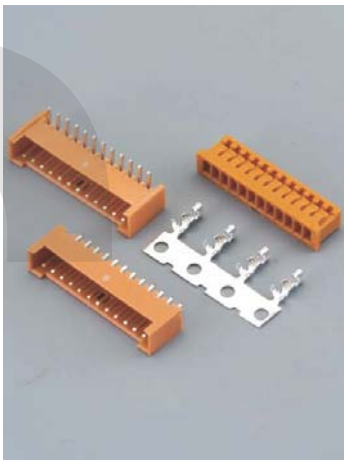

Material:

Housing: PA66 (PA66) UL94V-2
Contacts: Brass or Phosphor Bronze
Plating: Tin 50u" over 100u" nickel
Wire range : AWG#32~#22
Straight and Right Male pin Material: brass / tin-plated

Right Male Pin

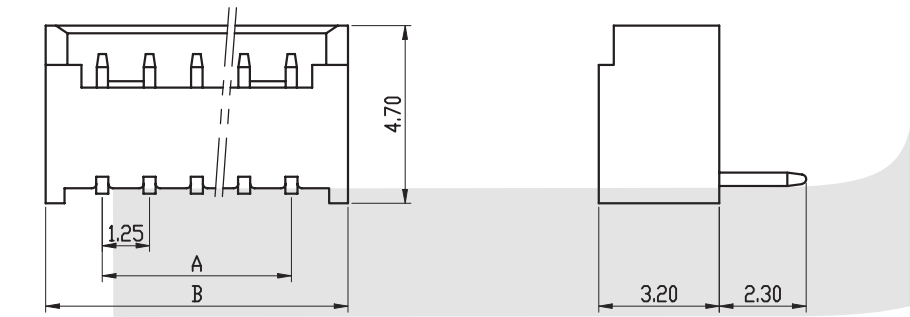

Poles	Dimensions mm	
	A	B
02	1.25	4.25
03	2.50	5.50
04	3.75	6.75
05	5.00	8.00
06	6.25	9.25
07	7.50	10.50
08	8.75	11.75
09	10.00	13.00
10	11.25	14.25
11	12.50	15.50
12	13.75	16.75
13	15.00	18.00
14	16.25	19.25
15	17.50	20.50
16	18.75	21.75

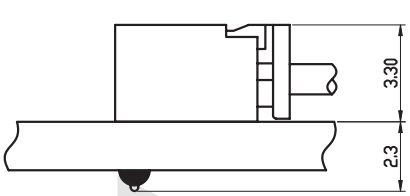

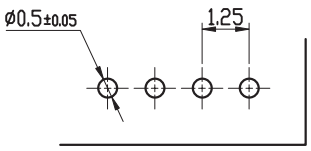

P. C. B LAYOUT

ORDER INFORMATION

Product NO.: KLS1-XL1-1.25-02-R

Series No.
Pitch: 1.25=1.25mm
PIN Number: 02 ~ 16Pin
Type: H=Housing
T=Terminal
S=Straight Male pin
R=Right Male pin

PCB Connector Series

KLS1-XL1-1.50 Pitch=1.50mm TYPE

Electrical Specification:
Rated Voltage: 50/250V AC.DC
Rated Current: 0.7A 2A
Contact Resistance: 0.02 Ohm max
Insulation Resistance: 1000M Ohm min
Withstand voltage: 800V AC/MIN
Temperature range for usage : -25ºC~+85ºC
P.C board thickness : 0.8~1.6mm

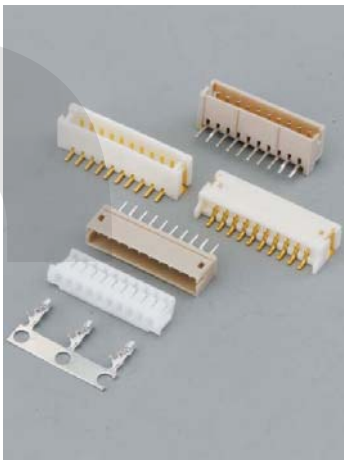

Material:
Housing: PA66 (PA66) UL94V-2
Contacts: Brass or Phosphor Bronze
Plating: Tin 50u" over 100u" nickel
Wire range : AWG#32~#22

Housing

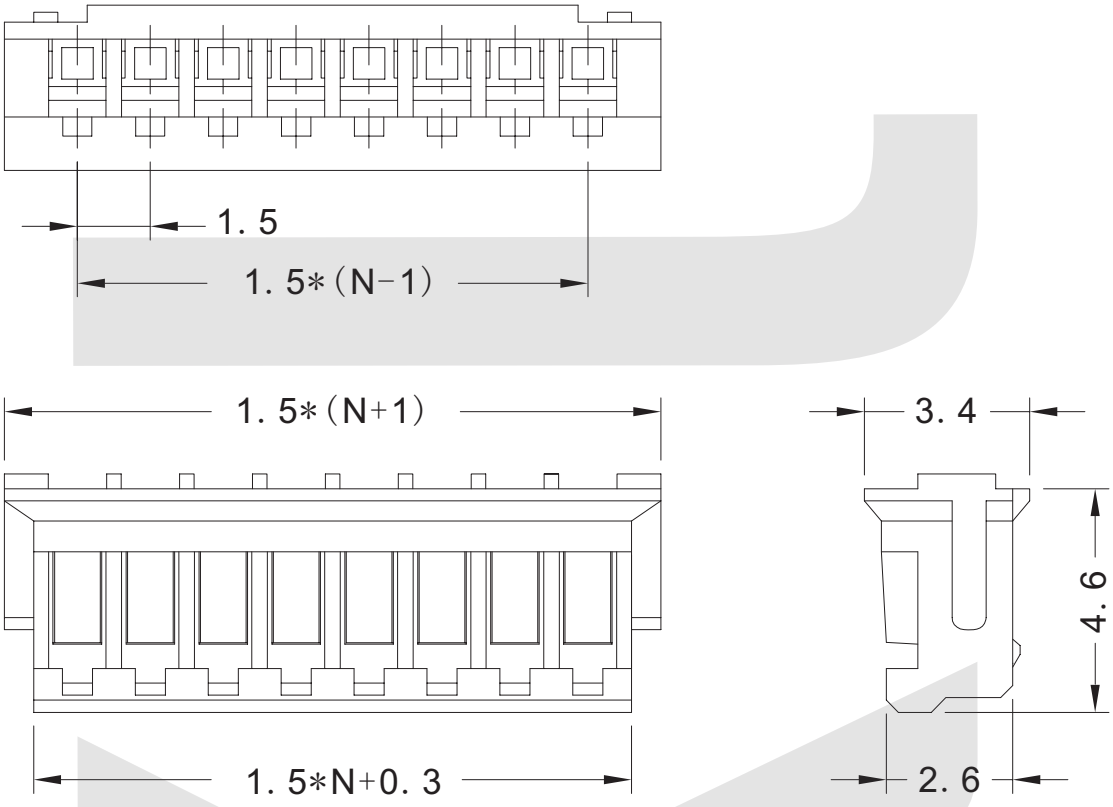

ORDER INFORMATION

Product NO.: KLS1-XL1-1.50-02-H

Series No.
Pitch: 1.50=1.50mm
PIN Number: 02 ~ 20Pin
Type:H=Housing T=Terminal
S=Straight Male pin
R=Right Male pin
VM=Vertical SMT
RM=Horizontal SMT

PCB Connector Series

KLS1-XL1-1.50 Pitch=1.50mm TYPE

Electrical Specification:
Rated Voltage: 50/250V AC.DC
Rated Current: 0.7A 2A
Contact Resistance: 0.02 Ohm max
Insulation Resistance: 1000M Ohm min
Withstand voltage: 800V AC/MIN
Temperature range for usage : -25°C~+85°C
P.C board thickness : 0.8~1.6mm

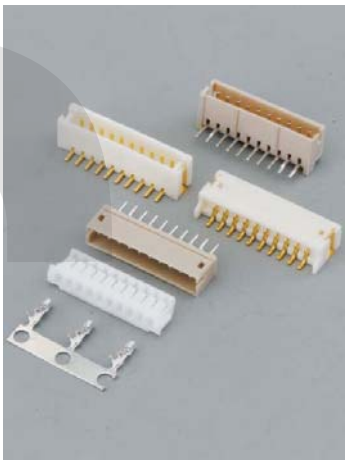

Material:
Housing: PA66 (PA66) UL94V-2
Contacts: Brass or Phosphor Bronze
Plating: Tin 50u" over 100u" nickel
Wire range : AWG#32~#22

Terminal

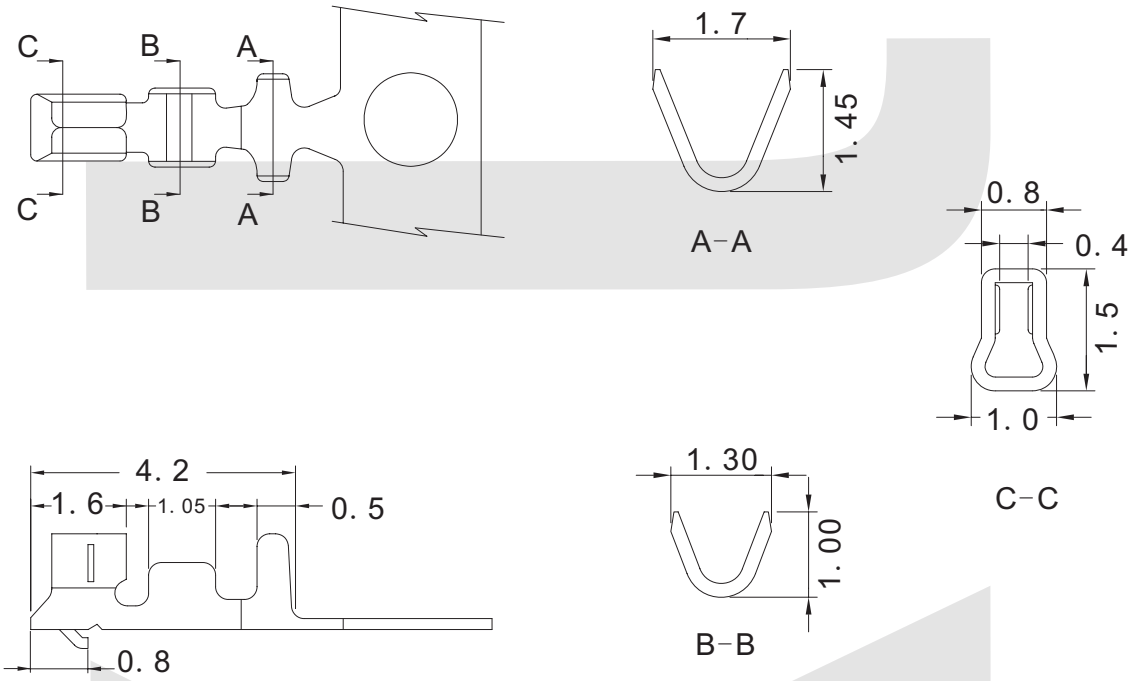

ORDER INFORMATION

Product NO.: KLS1-XL1-1.50-T

Series No.
Pitch: 1.50=1.50mm

Type:H=Housing T=Terminal
S=Straight Male pin
R=Right Male pin
VM=Vertical SMT
RM=Horizontal SMT

PCB Connector Series

KLS1-XL1-1.50 Pitch=1.50mm TYPE

Electrical Specification:
Rated Voltage: 50/250V AC.DC
Rated Current: 0.7A 2A
Contact Resistance: 0.02 Ohm max
Insulation Resistance: 1000M Ohm min
Withstand voltage: 800V AC/MIN
Temperature range for usage : -25°C~+85°C
P.C board thickness : 0.8~1.6mm

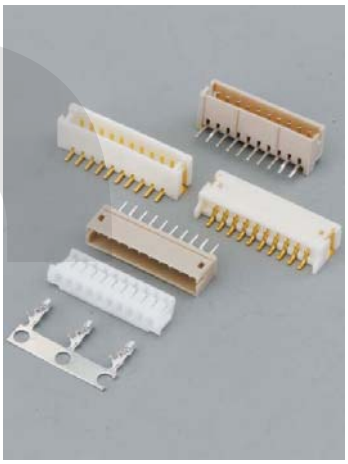

Material:
Housing: PA66 (PA66) UL94V-2
Contacts: Brass or Phosphor Bronze
Plating: Tin 50u" over 100u" nickel
Wire range : AWG#32~#22

Straight Male Pin

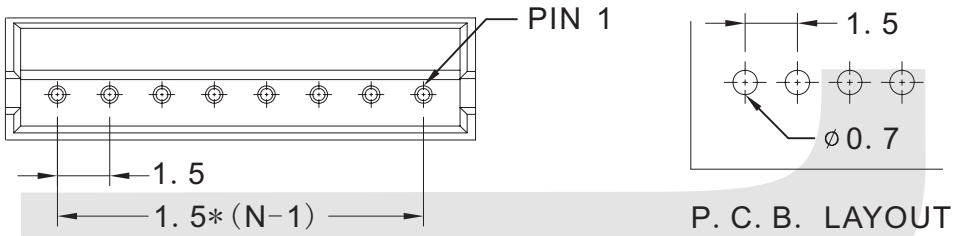

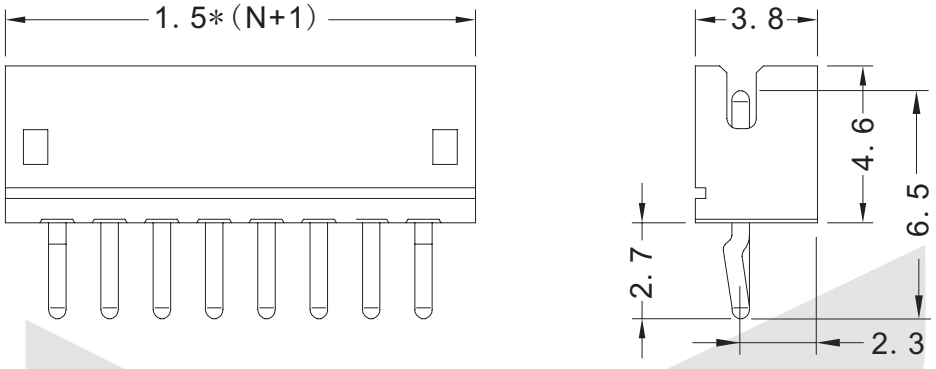

ORDER INFORMATION

Product NO.: KLS1-XL1-1.50-02-S

Series No.
Pitch: 1.50=1.50mm
PIN Number: 02 ~ 20Pin
Type:H=Housing T=Terminal
S=Straight Male pin
R=Right Male pin
VM=Vertical SMT
RM=Horizontal SMT

PCB Connector Series

KLS1-XL1-1.50 Pitch=1.50mm TYPE

Electrical Specification:
Rated Voltage: 50/250V AC.DC
Rated Current: 0.7A 2A
Contact Resistance: 0.02 Ohm max
Insulation Resistance: 1000M Ohm min
Withstand voltage: 800V AC/MIN
Temperature range for usage : -25°C~+85°C
P.C board thickness : 0.8~1.6mm

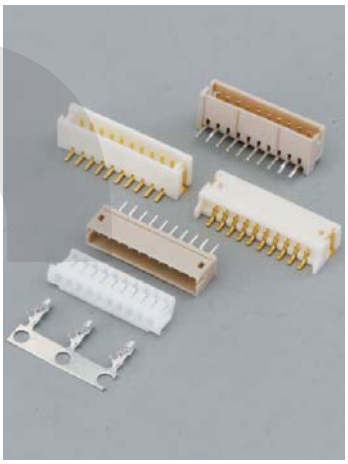

Material:
Housing: PA66 (PA66) UL94V-2
Contacts: Brass or Phosphor Bronze
Plating: Tin 50u" over 100u" nickel
Wire range : AWG#32~#22

Right Male Pin

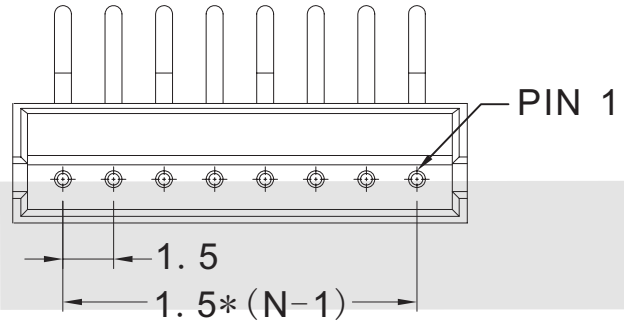

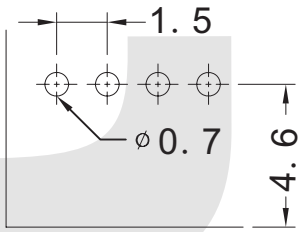

P.C.B. LAYOUT

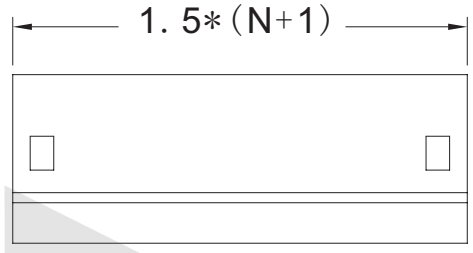

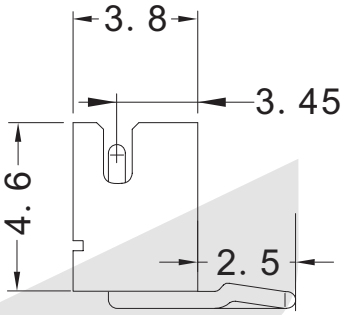

ORDER INFORMATION

Product NO.: KLS1-XL1-1.50-02-R

Series No.
Pitch: 1.50=1.50mm
PIN Number: 02 ~ 20Pin
Type:H=Housing T=Terminal
S=Straight Male pin
R=Right Male pin
VM=Vertical SMT
RM=Horizontal SMT

PCB Connector Series

KLS1-XL1-1.50 Pitch=1.50mm TYPE

Electrical Specification:
Rated Voltage: 50/250V AC.DC
Rated Current: 0.7A 2A
Contact Resistance: 0.02 Ohm max
Insulation Resistance: 1000M Ohm min
Withstand voltage: 800V AC/MIN
Temperature range for usage : -25°C~+85°C
P.C board thickness : 0.8~1.6mm

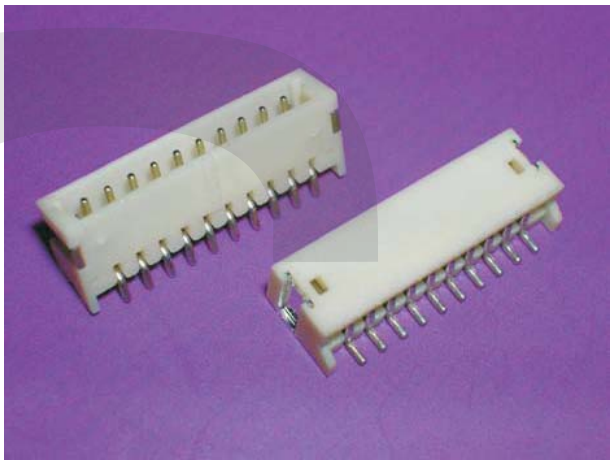

Material:
Housing: PA66 (PA66) UL94V-2
Contacts: Brass or Phosphor Bronze
Plating: Tin 50u" over 100u" nickel
Wire range : AWG#32~#22

Horizontal SMT

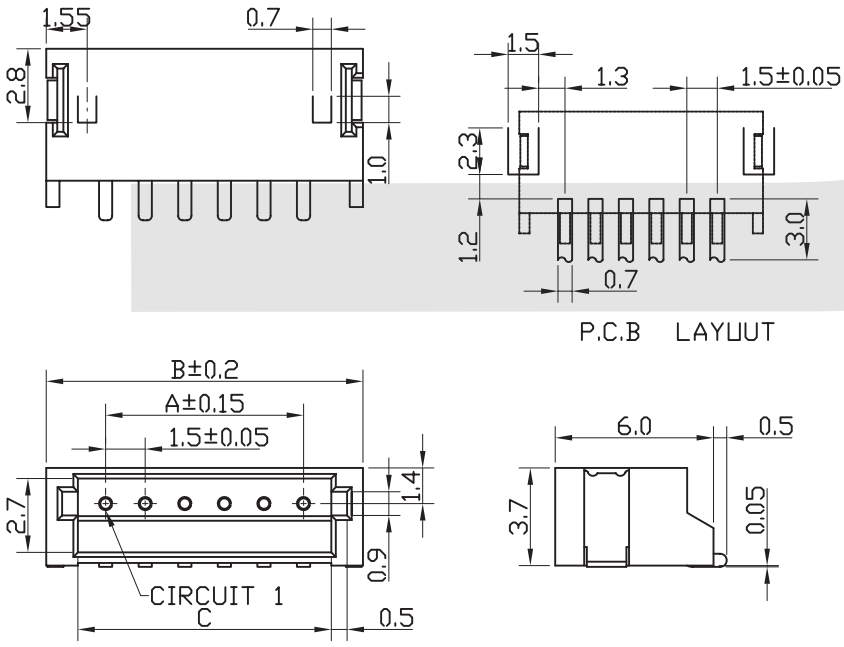

Dimensional

Poles	DIM: (mm)		
	A	B	C
02	1.50	6.00	3.60
03	3.00	7.50	5.10
04	4.50	9.00	6.60
05	6.00	10.50	8.10
06	7.50	12.00	9.60
07	9.00	13.50	11.10
08	10.50	15.00	12.60
09	12.00	16.50	14.10
10	13.50	18.00	15.60
11	15.00	19.50	17.10
12	16.50	21.00	18.60
13	18.00	22.50	20.10

ORDER INFORMATION

Product NO.: KLS1-XL1-1.50-02-RM

Series No.
Pitch: 1.50=1.50mm
PIN Number: 02 ~ 13Pin
Type:H=Housing T=Terminal
S=Straight Male pin
R=Right Male pin
VM=Vertical SMT
RM=Horizontal SMT

I

PCB Connector Series

KLS1-XL1-1.50 Pitch=1.50mm TYPE

Electrical Specification:
Rated Voltage: 50/250V AC.DC
Rated Current: 0.7A 2A
Contact Resistance: 0.02 Ohm max
Insulation Resistance: 1000M Ohm min
Withstand voltage: 800V AC/MIN
Temperature range for usage : -25°C~+85°C
P.C board thickness : 0.8~1.6mm

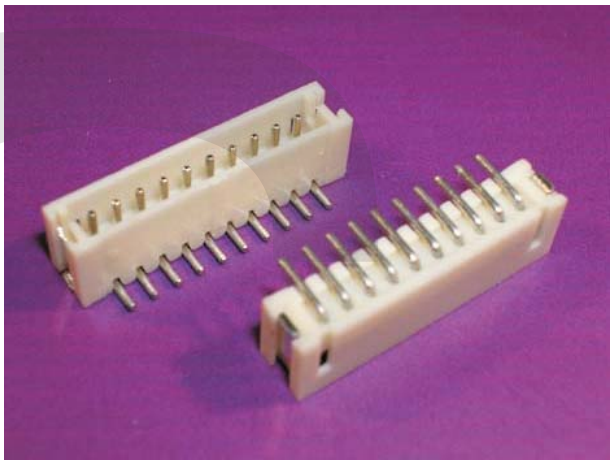

Material:
Housing: PA66 (PA66) UL94V-2
Contacts: Brass or Phosphor Bronze
Plating: Tin 50u" over 100u" nickel
Wire range : AWG#32~#22

Vertical SMT

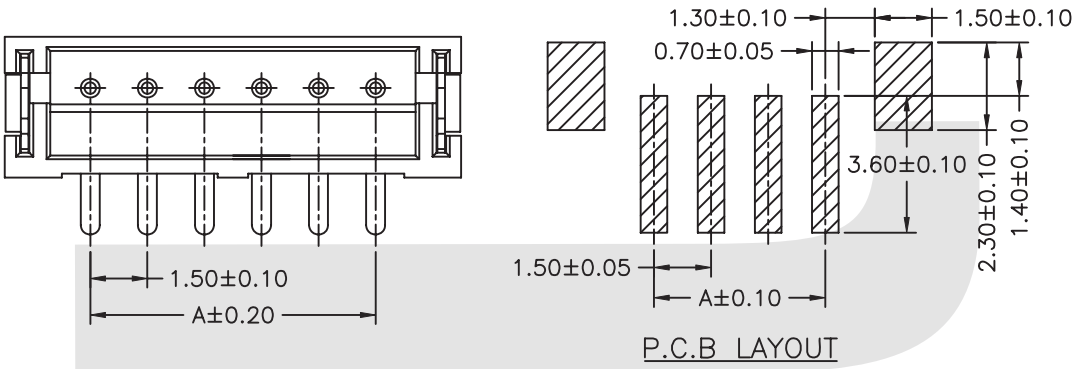

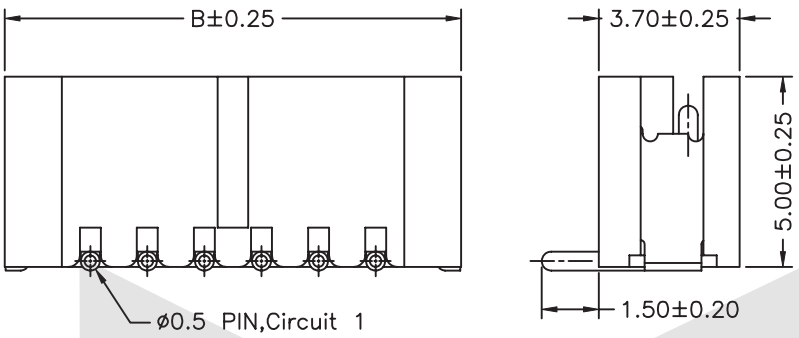

Poles	Dimensions	
	A	B
02	1.50	6.00
03	3.00	7.50
04	4.50	9.00
05	6.00	10.50
06	7.50	12.00
07	9.00	13.50
08	10.50	15.00
09	12.00	16.50
10	13.50	18.00
11	15.00	19.50
12	16.50	21.00
13	18.00	22.50

ORDER INFORMATION

Product NO.: KLS1-XL1-1.50-02-VM

Series No.
Pitch: 1.50=1.50mm
PIN Number: 02 ~ 13Pin
Type:H=Housing T=Terminal
S=Straight Male pin
R=Right Male pin
VM=Vertical SMT
RM=Horizontal SMT

PCB Connector Series

KLS1-540B Pitch=2.0mm TYPE



Electrical Specification:
Current Rating: 2 AMP
Insulator Resistance: 1000M Ohm min. at DC 500V
Contact Resistance: 20m Ohm max. at DC 100mA
Withstand voltage: 1000V AC/min
Operating Temperature: -55°C~+105°C

Material:
Housing: Nylon 66 UL94V-0
Contacts: Phosphor Bronze
Plating: Tin 50u" over 100u" nickel

Housing 540B

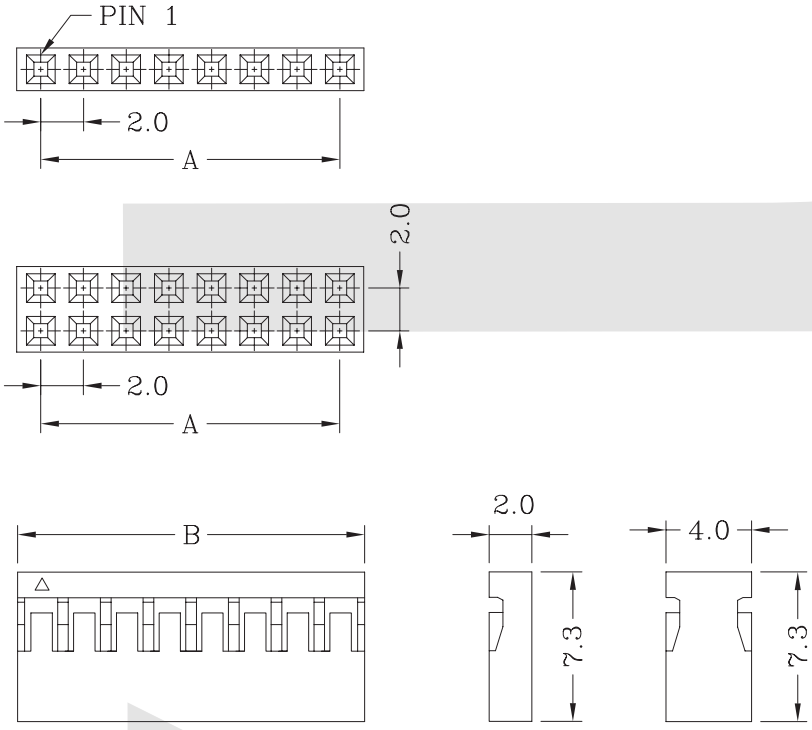

Part No	Dimensions		Part No	Dimensions	
	A	B		A	B
1x2P	2.00	4.25	2x2P	2.00	4.25
1x3P	4.00	6.25	2x3P	4.00	6.25
1x4P	6.00	8.25	2x4P	6.00	8.25
1x5P	8.00	10.25	2x5P	8.00	10.25
1x6P	10.00	12.25	2x6P	10.00	12.25
1x7P	12.00	14.25	2x7P	12.00	14.25
1x8P	14.00	16.25	2x8P	14.00	16.25
1x9P	16.00	18.25	2x9P	16.00	18.25
1x10P	18.00	20.25	2x10P	18.00	20.25
1x11P	20.00	22.25	2x11P	20.00	22.25
1x12P	22.00	24.25	2x12P	22.00	24.25
1x13P	24.00	26.25	2x13P	24.00	26.25
1x14P	26.00	28.25	2x14P	26.00	28.25
1x15P	28.00	30.25	2x15P	28.00	30.25
1x16P	30.00	32.25	2x16P	30.00	32.25
1x17P	32.00	34.25	2x17P	32.00	34.25
1x18P	34.00	36.25	2x18P	34.00	36.25
1x19P	36.00	38.25	2x19P	36.00	38.25
1x20P	38.00	40.25	2x20P	38.00	40.25
1x21P	40.00	42.25	2x21P	40.00	42.25
1x22P	42.00	44.25	2x22P	42.00	44.25
1x23P	44.00	46.25	2x23P	44.00	46.25
1x24P	46.00	48.25	2x24P	46.00	48.25
1x25P	48.00	50.25	2x25P	48.00	50.25
1x26P	50.00	52.25			
1x27P	52.00	54.25			
1x28P	54.00	56.25			
1x29P	56.00	58.25			
1x30P	58.00	60.25			
1x31P	60.00	62.25			
1x32P	62.00	64.25			
1x33P	64.00	66.25			
1x34P	66.00	68.25			
1x35P	68.00	70.25			
1x36P	70.00	72.25			
1x37P	72.00	74.25			
1x38P	74.00	76.25			
1x39P	76.00	78.25			
1x40P	78.00	80.25			

ORDER INFORMATION

Product NO.: KLS1-540 B-1X02-H

Series No.
Pitch: A=2.54mm
B=2.00mm
Pins: 1-Single layer
2-Double layer
PIN Number:02 ~ 25Pin
Type: H-Housing T-Terminal

I

PCB Connector Series

KLS1-540B Pitch=2.0mm TYPE



Electrical Specification:
Current Rating: 2 AMP
Insulator Resistance: 1000M Ohm min. at DC 500V
Contact Resistance: 20m Ohm max. at DC 100mA
Withstand voltage: 1000V AC/min
Operating Temperature: -55°C~+105°C

Material:
Housing: Nylon 66 UL94V-0
Contacts: Phosphor Bronze
Plating: Tin 50u" over 100u" nickel

Terminal 540B

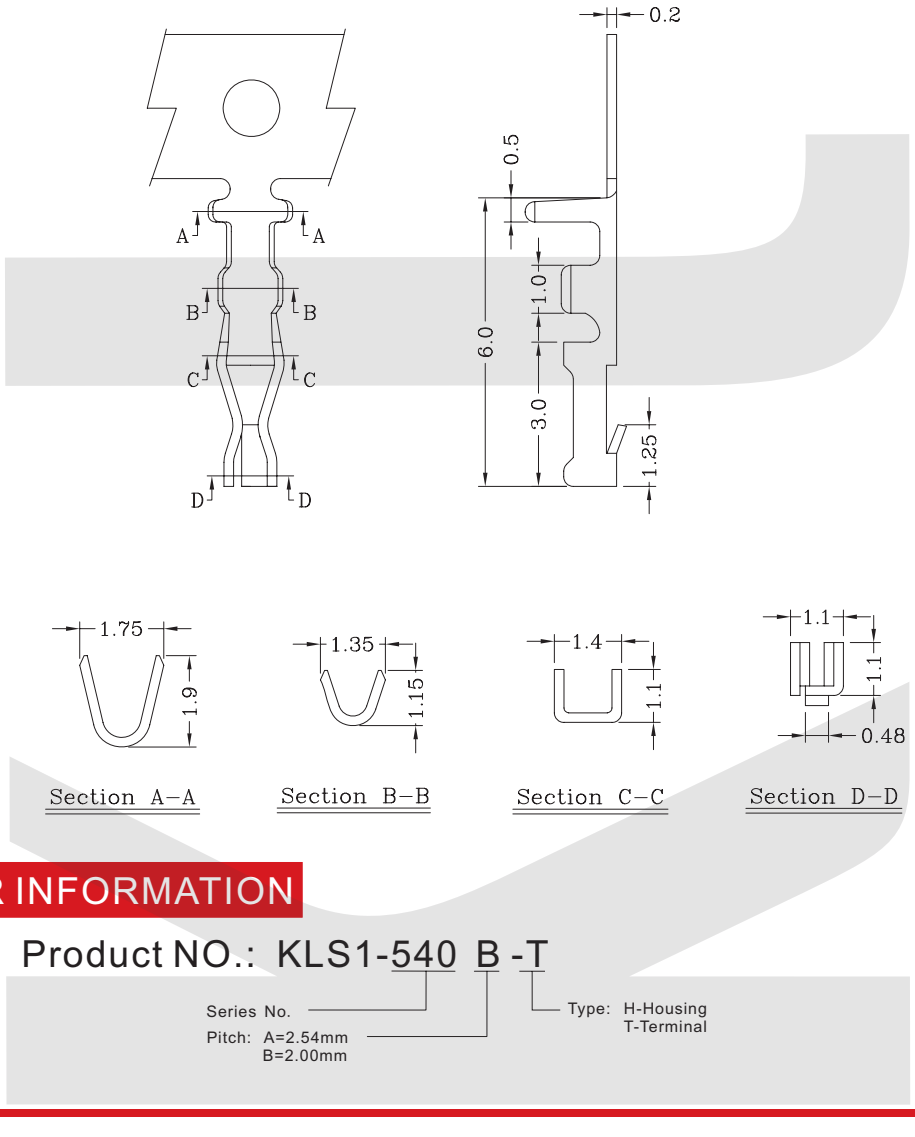

ORDER INFORMATION

Product NO.: KLS1-540 B -T

Series No.
Pitch: A=2.54mm
B=2.00mm
Type: H-Housing
T-Terminal

PCB Connector Series

KLS1-XL1-2.00 Pitch=2.00mm TYPE

Electrical Specification:

Rated Voltage: 50/250V AC.DC
Rated Current: 2A
Contact Resistance: 0.02 Ohm max
Insulation Resistance: 1000M Ohm min
Withstand voltage: 800V AC/MIN
Temperature range for usage : -40°C~+105°C
P.C board thickness : 0.8~1.6mm



Material:

Housing: PA66 UL94V-2
Contacts: Phosphor Bronze
Plating: Tin 50u" over 100u" nickel
Wire range : AWG#32~#22

Housing

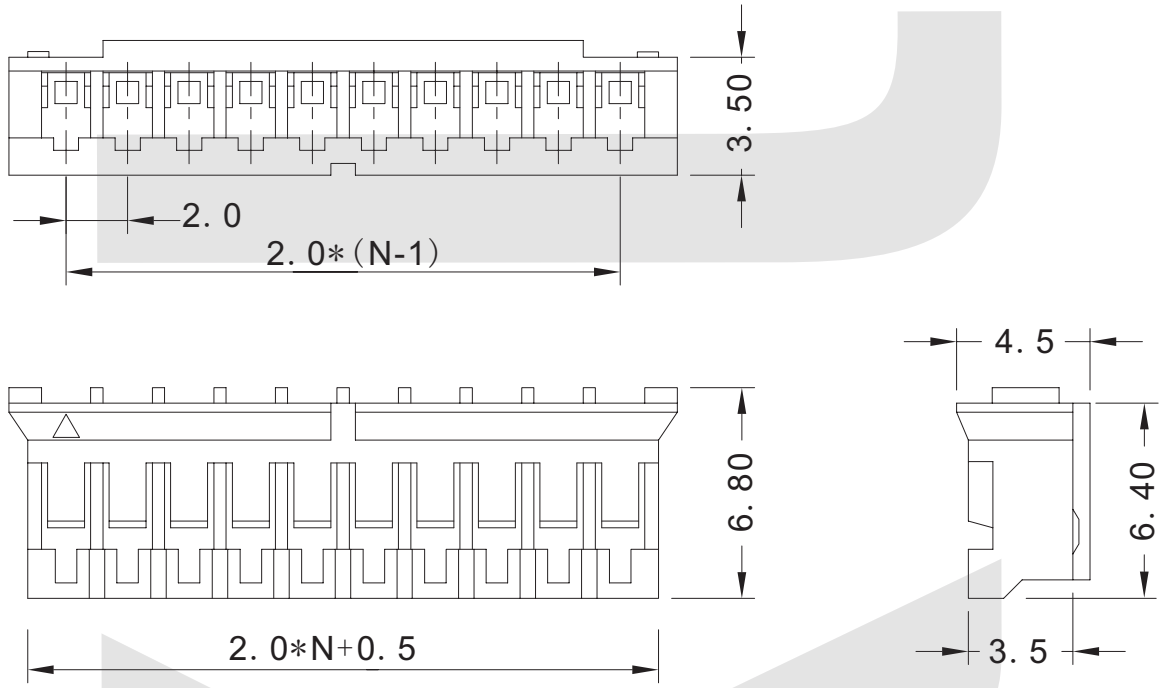

ORDER INFORMATION

Product NO.: KLS1-XL1-2.00-02-H

Series No.
Pitch: 2.00=2.00mm
PIN Number: 2~30pin

Type: H=Housing
S=Straight Male pin
VM = Vertical SMT

T=Terminal
R=Right Male pin
RM = Horizontal SMT

I

PCB Connector Series

KLS1-XL1-2.00 Pitch=2.00mm TYPE

Electrical Specification:

Rated Voltage: 50/250V AC.DC
Rated Current: 2A
Contact Resistance: 0.02 Ohm max
Insulation Resistance: 1000M Ohm min
Withstand voltage: 800V AC/MIN
Temperature range for usage : -40°C~+105°C
P.C board thickness : 0.8~1.6mm



Material:

Contacts: Phosphor Bronze
Plating: Tin 50u" over 100u" nickel
Wire range : AWG#32~#22

Terminal

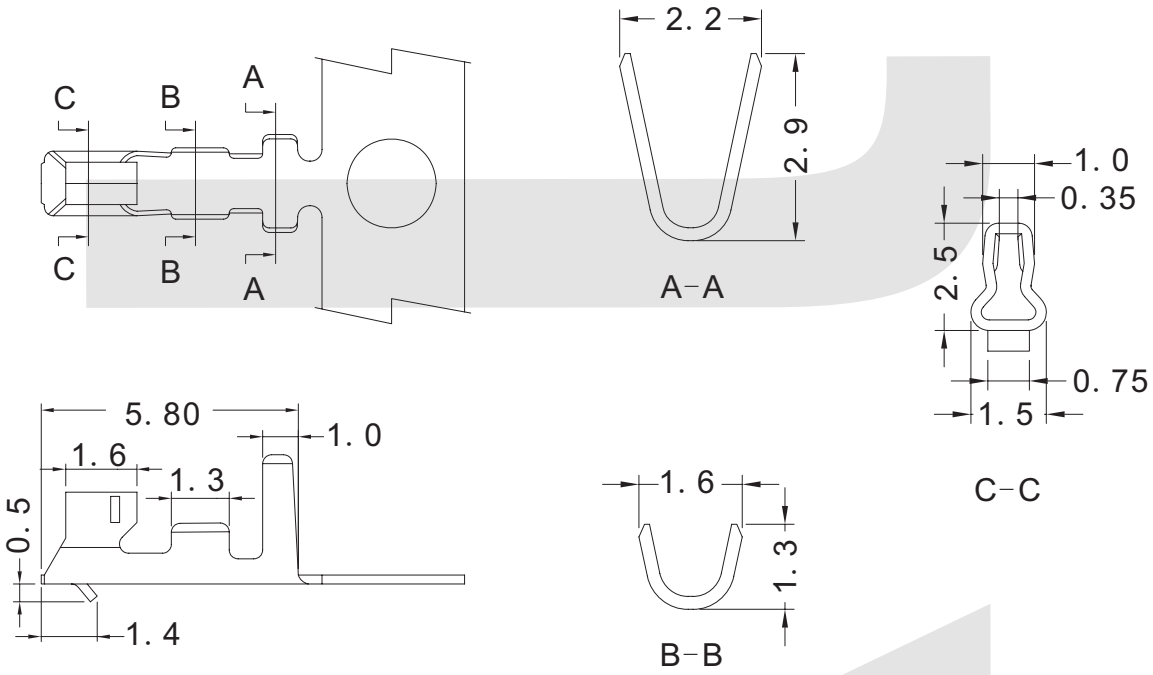

ORDER INFORMATION

Product NO.: KLS1-XL1-2.00-T

Series No.
Pitch: 2.00=2.00mm

Type: H=Housing
S=Straight Male pin
VM = Vertical SMT

T=Terminal
R=Right Male pin
RM = Horizontal SMT

I

PCB Connector Series

KLS1-XL1-2.00 Pitch=2.00mm TYPE

Electrical Specification:

Rated Voltage: 50/250V AC.DC
Rated Current: 2A
Contact Resistance: 0.02 Ohm max
Insulation Resistance: 1000M Ohm min
Withstand voltage: 800V AC/MIN
Temperature range for usage : -40°C~+105°C
P.C board thickness : 0.8~1.6mm



Material:

Housing: PA66 UL94V-2
Contacts: Brass
Plating: Tin 50u" over 100u" nickel

Straight Male Pin

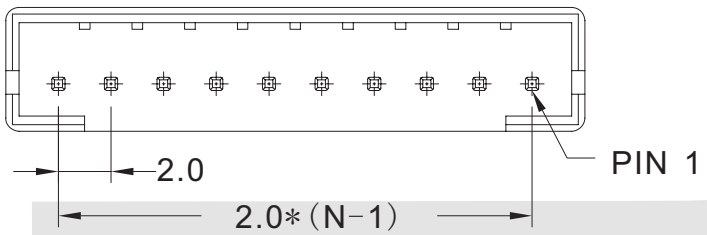

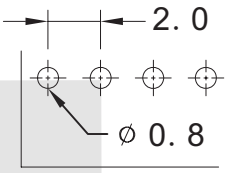

PCB LAYOUT

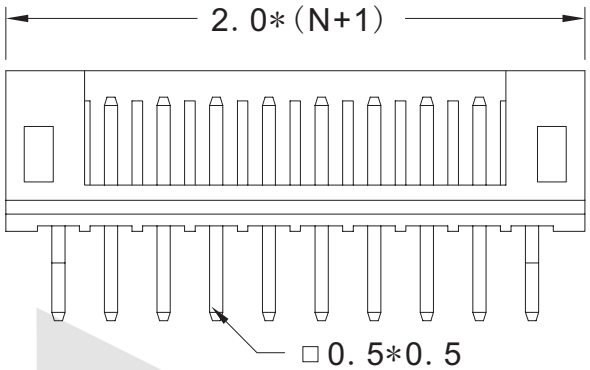

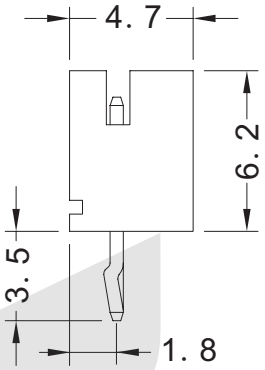

ORDER INFORMATION

Product NO.: KLS1-XL1-2.00-02-S

Series No.
Pitch: 2.00=2.00mm
PIN Number: 2~30pin

Type: H=Housing
S=Straight Male pin
VM = Vertical SMT

T=Terminal
R=Right Male pin
RM = Horizontal SMT

I

PCB Connector Series

KLS1-XL1-2.00 Pitch=2.00mm TYPE

Electrical Specification:

Rated Voltage: 50/250V AC.DC
Rated Current: 2A
Contact Resistance: 0.02 Ohm max
Insulation Resistance: 1000M Ohm min
Withstand voltage: 800V AC/MIN
Temperature range for usage : -40°C~+105°C
P.C board thickness : 0.8~1.6mm



Material:

Housing: PA66 UL94V-2
Contacts: Brass
Plating: Tin 50u" over 100u" nickel

Right Male Pin

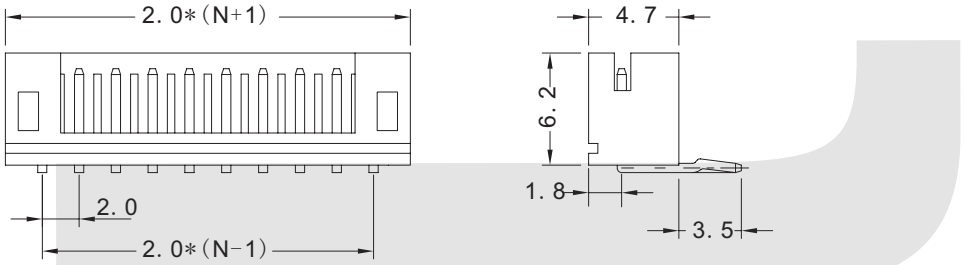

R1 type

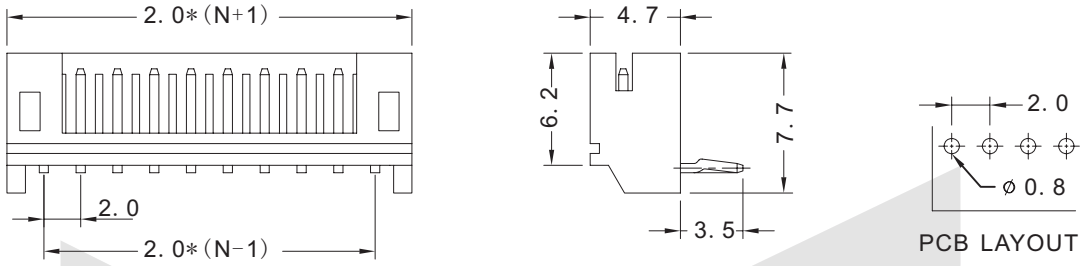

R type

PCB LAYOUT

ORDER INFORMATION

Product NO.: KLS1-XL1-2.00-02-R

Series No.
Pitch: 2.00=2.00mm
PIN Number: 2~30pin

Type: H=Housing
S=Straight Male pin
VM = Vertical SMT

T=Terminal
R=Right Male pin
RM = Horizontal SMT

I

PCB Connector Series

KLS1-XL1-2.00 Pitch=2.00mm TYPE

Electrical Specification:

Rated Voltage: 50/250V AC.DC
Rated Current: 2A
Contact Resistance: 0.02 Ohm max
Insulation Resistance: 1000M Ohm min
Withstand voltage: 800V AC/MIN
Temperature range for usage : -40°C~+105°C
P.C board thickness : 0.8~1.6mm



Material:

Housing: PA66 UL94V-2
Contacts: Brass
Plating: Tin 50u" over 100u" nickel

Vertical SMT

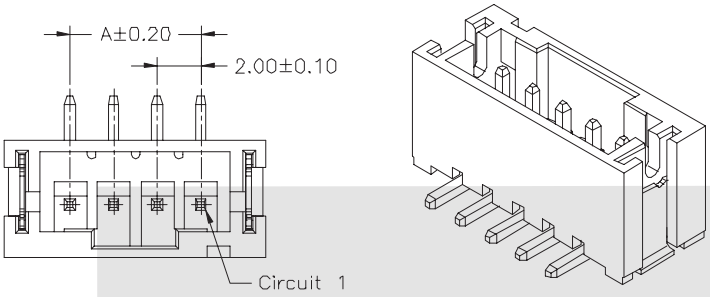

PART NO.	Dimensions	
	A	B
02	2.00	8.00
03	4.00	10.00
04	6.00	12.00
05	8.00	14.00
06	10.00	16.00
07	12.00	18.00
08	14.00	20.00
09	16.00	22.00
10	18.00	24.00
11	20.00	26.00
12	22.00	28.00
13	24.00	30.00
14	26.00	32.00
15	28.00	34.00
16	30.00	36.00

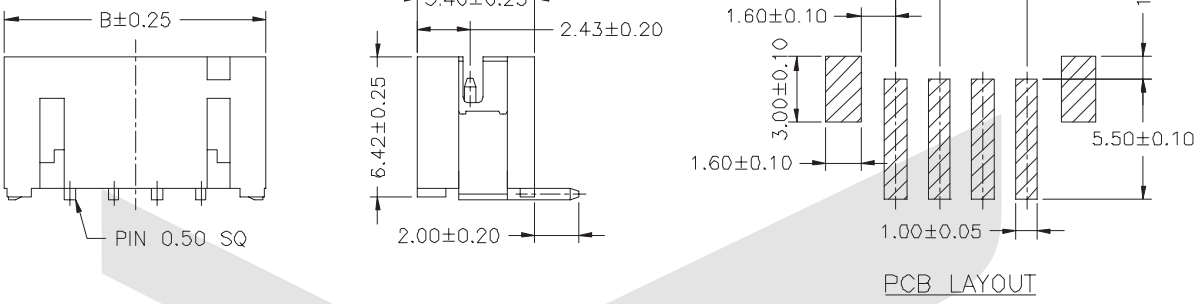

ORDER INFORMATION

Product NO.: KLS1-XL1-2.00-02-VM

Series No.
Pitch: 2.00=2.00mm
PIN Number: 2~16pin

Type: H=Housing
S=Straight Male pin
VM = Vertical SMT

T=Terminal
R=Right Male pin
RM = Horizontal SMT

PCB Connector Series

KLS1-XL1-2.00 Pitch=2.00mm TYPE

Electrical Specification:

Rated Voltage: 50/250V AC.DC
Rated Current: 2A
Contact Resistance: 0.02 Ohm max
Insulation Resistance: 1000M Ohm min
Withstand voltage: 800V AC/MIN
Temperature range for usage : -40°C~+105°C
P.C board thickness : 0.8~1.6mm



Material:

Housing: PA66 UL94V-2
Contacts: Brass
Plating: Tin 50u" over 100u" nickel

Horizontal SMT

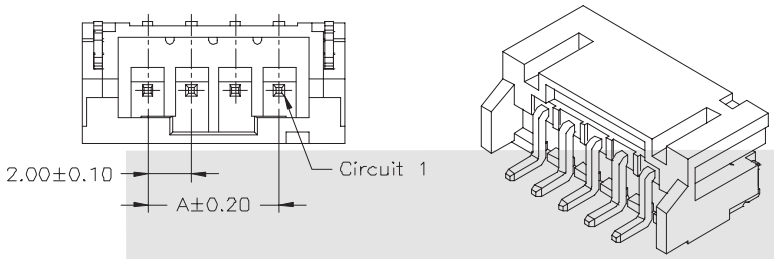

PART NO.	Dimensions	
	A	B
02	2.00	8.00
03	4.00	10.00
04	6.00	12.00
05	8.00	14.00
06	10.00	16.00
07	12.00	18.00
08	14.00	20.00
09	16.00	22.00
10	18.00	24.00
11	20.00	26.00
12	22.00	28.00
13	24.00	30.00
14	26.00	32.00
15	28.00	34.00
16	30.00	36.00

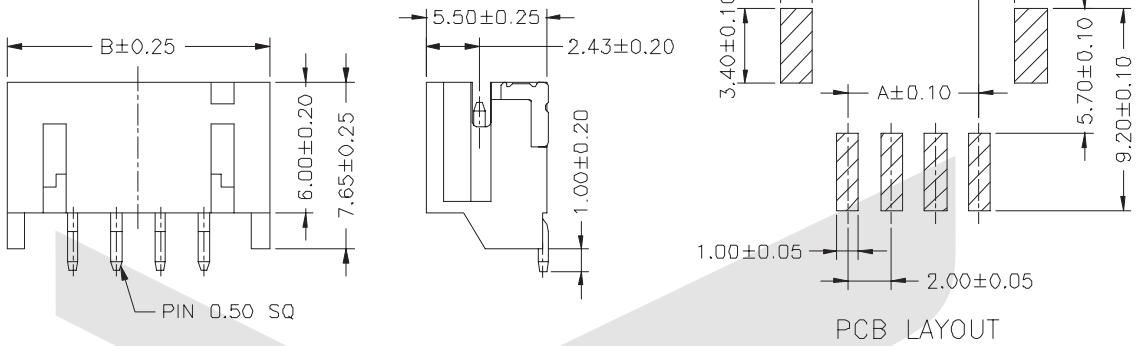

ORDER INFORMATION

Product NO.: KLS1-XL1-2.00-02-RM

Series No.
Pitch: 2.00=2.00mm
PIN Number: 2~16pin

Type: H=Housing
S=Straight Male pin
VM = Vertical SMT

T=Terminal
R=Right Male pin
RM = Horizontal SMT

PCB Connector Series

KLS1-XA1-2.00 Pitch=2.00mm TYPE

Electrical Specification:

Rated Voltage: 250V AC.DC
Rated Current: 3A
Contact Resistance: 0.02 Ohm max
Insulation Resistance: 1000M Ohm min
Withstand voltage: 1000V AC/MIN
Temperature range for usage : -40°C~+105°C
P.C board thickness : 0.8~1.6mm



Material:

Housing: PA66 UL94V-2
Contacts: Phosphor Bronze
Plating: Tin 50u" over 100u" nickel
Wire range : AWG#30~#22

Housing

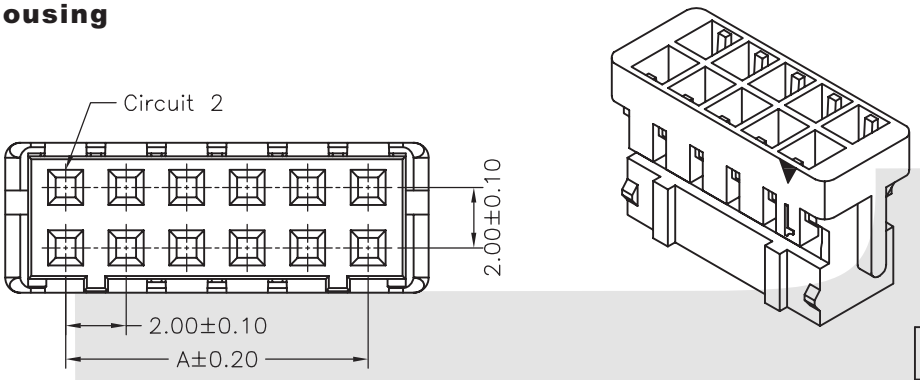

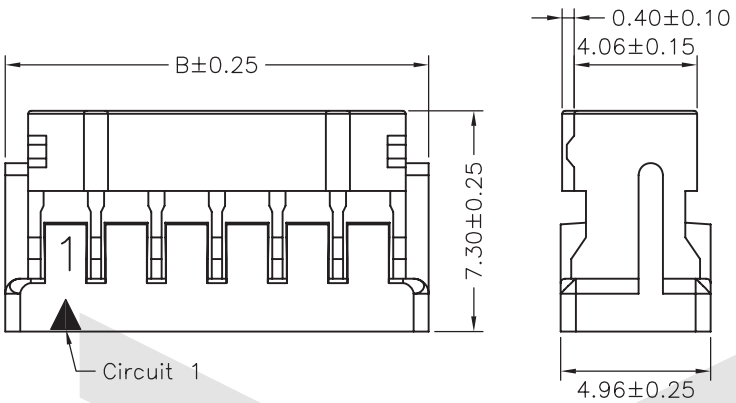

PART NO.	Dimensions	
	A	B
04	2.00	6.00
06	4.00	8.00
08	6.00	10.00
10	8.00	12.00
12	10.00	14.00
14	12.00	16.00
16	14.00	18.00
18	16.00	20.00
20	18.00	22.00
22	20.00	24.00
24	22.00	26.00
26	24.00	28.00
28	26.00	30.00
30	28.00	32.00
32	30.00	34.00
34	32.00	36.00
36	34.00	38.00
38	36.00	40.00
40	38.00	42.00

ORDER INFORMATION

Product NO.: KLS1-XA1-2.00-XX-H

Series No.
Pitch: 2.00=2.00mm
PIN Number: 4 ~ 40Pin
Type: H=Housing
S=Straight Male pin
T=Terminal
R=Right Male pin

I

PCB Connector Series

KLS1-XA1-2.00 Pitch=2.00mm TYPE



Electrical Specification:

Rated Voltage: 250V AC.DC
Rated Current: 3A
Contact Resistance: 0.02 Ohm max
Insulation Resistance: 1000M Ohm min
Withstand voltage: 1000V AC/MIN
Temperature range for usage : -40°C~+105°C
P.C board thickness : 0.8~1.6mm

Material:

Contacts: Phosphor Bronze
Plating: Tin 50u" over 100u" nickel
Wire range : AWG#30~#22

Terminal

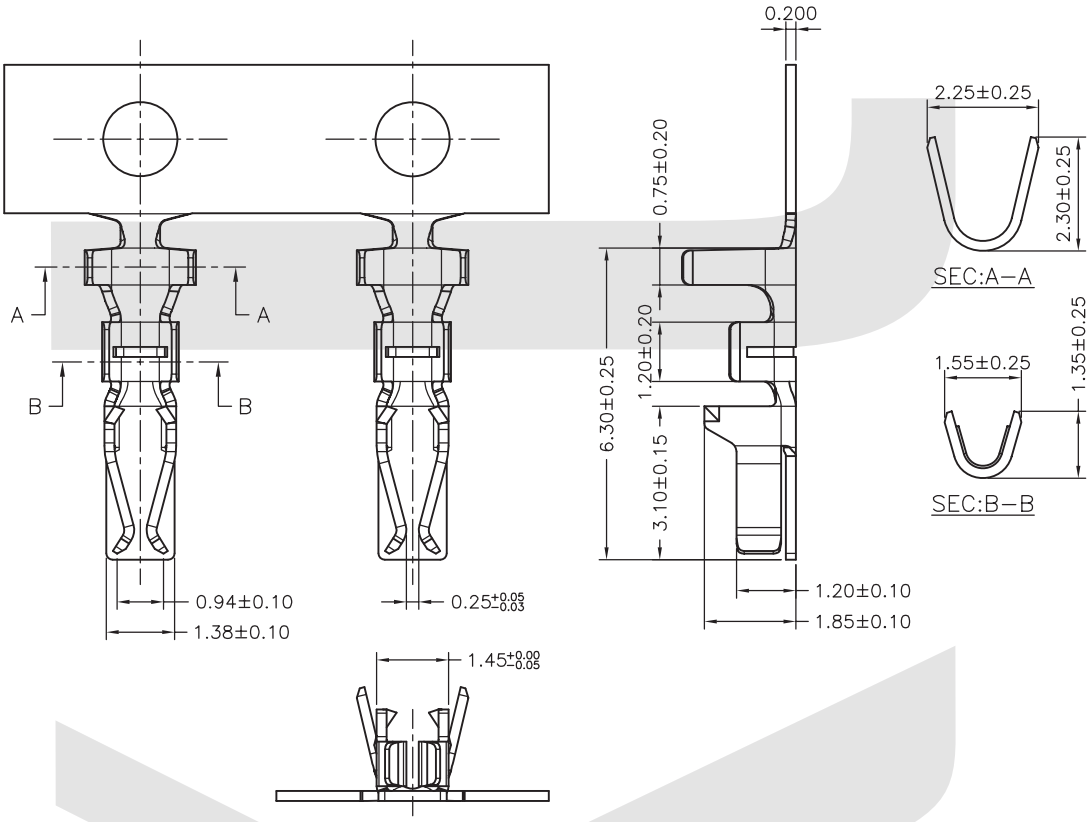

ORDER INFORMATION

Product NO.: KLS1-XA1-2.00-T

Type: H=Housing T=Terminal
S=Straight Male pin R=Right Male pin

Series No.
Pitch: 2.00=2.00mm

PCB Connector Series

KLS1-XA1-2.00 Pitch=2.00mm TYPE

Electrical Specification:

Rated Voltage: 250V AC.DC
Rated Current: 3A
Contact Resistance: 0.02 Ohm max
Insulation Resistance: 1000M Ohm min
Withstand voltage: 1000V AC/MIN
Temperature range for usage : -40°C~+105°C
P.C board thickness : 0.8~1.6mm



Material:

Housing: PA66 UL94V-2
Contacts: Brass
Plating: Tin 50u" over 100u" nickel
Wire range : AWG#30~#22

Straight Male pin

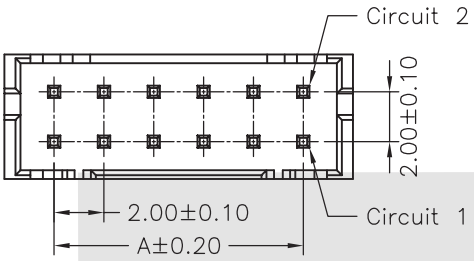

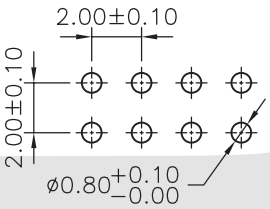

P.C.B LAYOUT

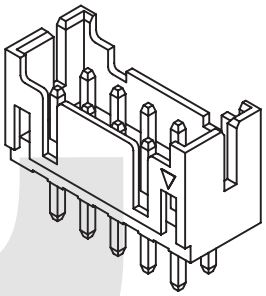

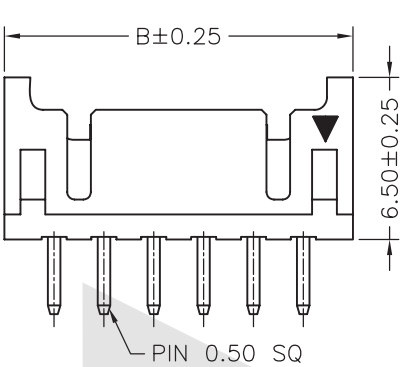

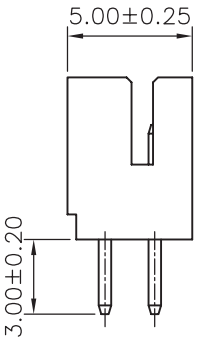

PART NO.	Dimensions	
	A	B
04	2.00	6.00
06	4.00	8.00
08	6.00	10.00
10	8.00	12.00
12	10.00	14.00
14	12.00	16.00
16	14.00	18.00
18	16.00	20.00
20	18.00	22.00
22	20.00	24.00
24	22.00	26.00
26	24.00	28.00
28	26.00	30.00
30	28.00	32.00
32	30.00	34.00
34	32.00	36.00
36	34.00	38.00
38	36.00	40.00
40	38.00	42.00

ORDER INFORMATION

Product NO.: KLS1-XA1-2.00-XX-S

Series No.
Pitch: 2.00=2.00mm
PIN Number: 2 ~ 20Pin
Type: H=Housing
S=Straight Male pin
T=Terminal
R=Right Male pin

KLS electronic
www.cnkls.com

PCB Connector Series

KLS1-XA1-2.00 Pitch=2.00mm TYPE



Electrical Specification:

Rated Voltage: 250V AC.DC
Rated Current: 3A
Contact Resistance: 0.02 Ohm max
Insulation Resistance: 1000M Ohm min
Withstand voltage: 1000V AC/MIN
Temperature range for usage : -40°C~+105°C
P.C board thickness : 0.8~1.6mm

Material:

Housing: PA66 UL94V-2
Contacts: Brass
Plating: Tin 50u" over 100u" nickel
Wire range : AWG#30~#22

Right Male pin

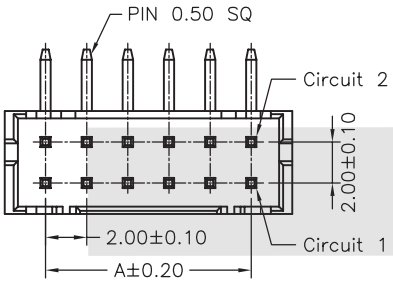

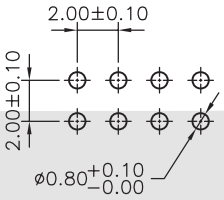

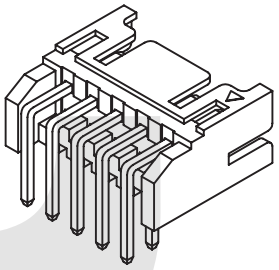

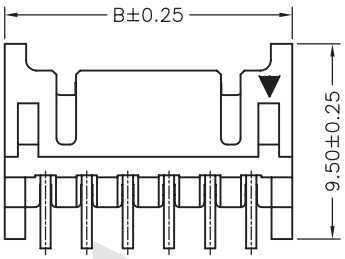

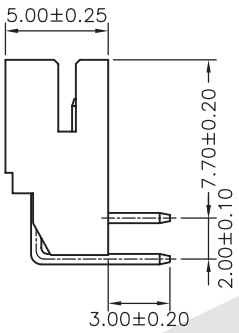

PART NO.	Dimensions	
	A	B
04	2.00	6.00
06	4.00	8.00
08	6.00	10.00
10	8.00	12.00
12	10.00	14.00
14	12.00	16.00
16	14.00	18.00
18	16.00	20.00
20	18.00	22.00
22	20.00	24.00
24	22.00	26.00
26	24.00	28.00
28	26.00	30.00
30	28.00	32.00
32	30.00	34.00
34	32.00	36.00
36	34.00	38.00
38	36.00	40.00
40	38.00	42.00

ORDER INFORMATION

Product NO.: KLS1-XA1-2.00-XX-R

Series No.
Pitch: 2.00=2.00mm
PIN Number: 2 ~ 20Pin
Type: H=Housing
S=Straight Male pin
T=Terminal
R=Right Male pin

PCB Connector Series

I

KLS1-XA1-2.00 Pitch=2.00mm TYPE



Electrical Specification:

Rated Voltage: 250V AC.DC
Rated Current: 3A
Contact Resistance: 0.02 Ohm max
Insulation Resistance: 1000M Ohm min
Withstand voltage: 1000V AC/MIN
Temperature range for usage : -40°C~+105°C
P.C board thickness : 0.8~1.6mm

Material:

Housing: PA66 UL94V-2
Contacts: Brass
Plating: Tin 50u" over 100u" nickel
Wire range : AWG#30~#22

SMT

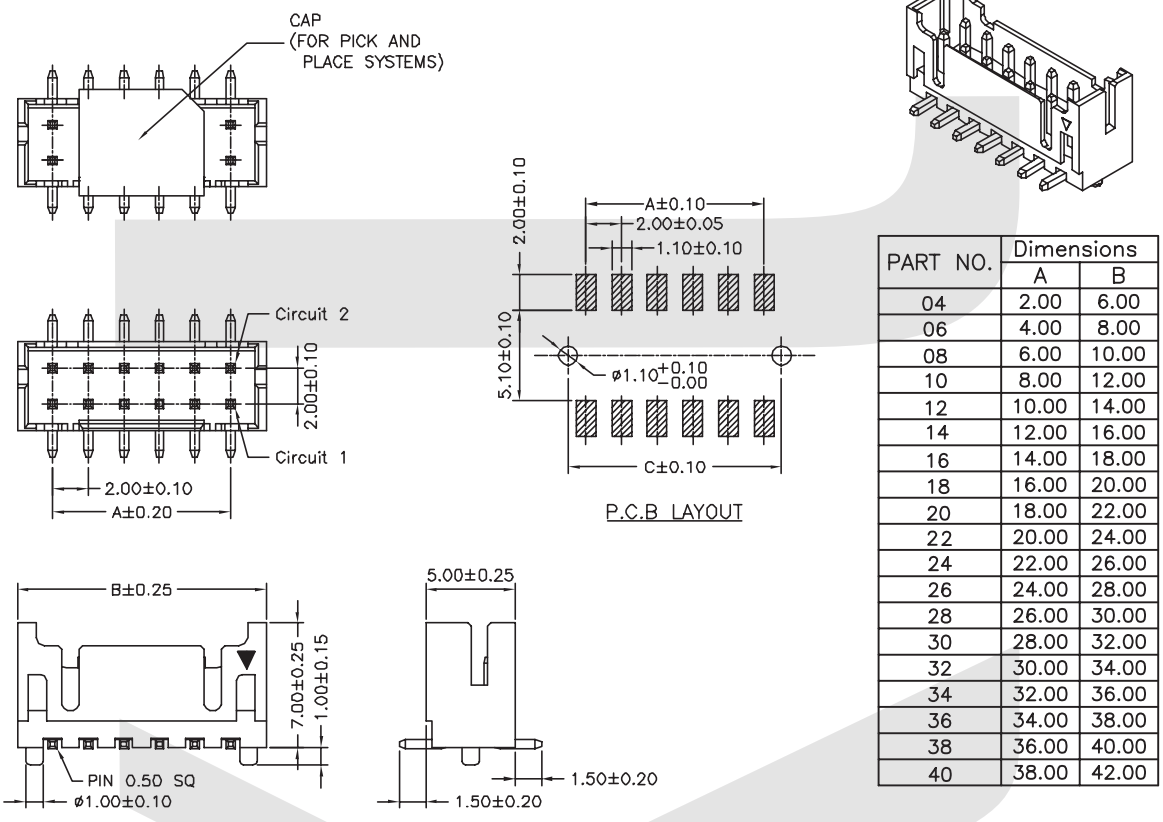

PART NO.	Dimensions	
	A	B
04	2.00	6.00
06	4.00	8.00
08	6.00	10.00
10	8.00	12.00
12	10.00	14.00
14	12.00	16.00
16	14.00	18.00
18	16.00	20.00
20	18.00	22.00
22	20.00	24.00
24	22.00	26.00
26	24.00	28.00
28	26.00	30.00
30	28.00	32.00
32	30.00	34.00
34	32.00	36.00
36	34.00	38.00
38	36.00	40.00
40	38.00	42.00

ORDER INFORMATION

Product NO.: KLS1-XA1-2.00-XX-M

Series No.
Pitch: 2.00=2.00mm
Type: M=SMT
PIN Number: 2 ~ 20Pin

PCB Connector Series

KLS1-2.50 Pitch=2.50mm TYPE

Electrical Specification:

Rated Voltage: 250V AC.DC
Rated Current: 3A
Contact Resistance: 0.02 Ohm max
Insulation Resistance: 1000M Ohm min
Withstand voltage: 1000V AC/MIN
Temperature range for usage : -25°C~+85°C
P.C board thickness : 0.8~1.6mm



Material:

Housing: PA66 (PA66) UL94V-2
Contacts: Brass or Phosphor Bronze
Plating: Tin 50u" over 100u" nickel
Wire range : AWG#30~#22
Color : White

Housing

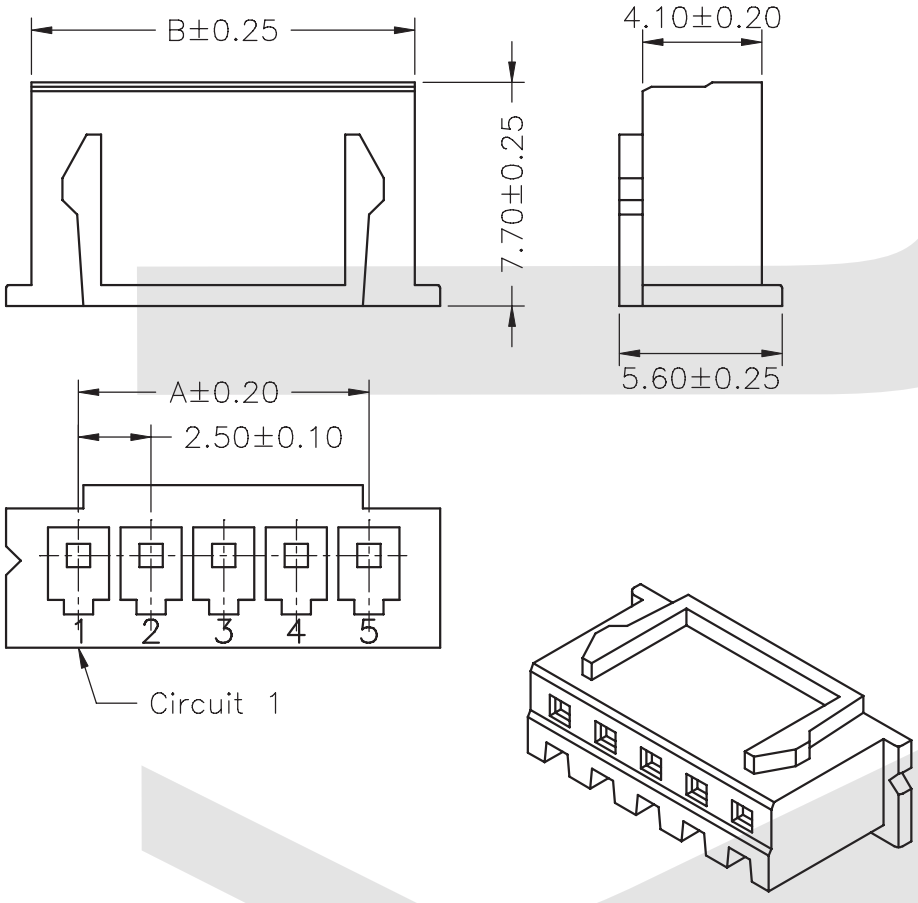

PART NO.	Dimensions	
	A	B
02	2.50	5.70
03	5.00	8.20
04	7.50	10.70
05	10.00	13.20
06	12.50	15.70
07	15.00	18.20
08	17.50	20.70
09	20.00	23.20
10	22.50	25.70
11	25.00	28.20
12	27.50	30.70
13	30.00	33.20
14	32.50	35.70
15	35.00	38.20
16	37.50	40.70
17	40.00	43.20
18	42.50	45.70
19	45.00	48.20
20	47.50	50.70

ORDER INFORMATION

Product NO.: KLS1-2.50-XX-H

Type: H=Housing T=Terminal
S=Straight Male pin R1=Right Male pin
R=High Right With Ears Male pin

Pitch: 2.50=2.50mm

PIN Number:2~ 20pin

KLS electronic
www.cnkls.com

I

PCB Connector Series

KLS1-2.50 Pitch=2.50mm TYPE



Electrical Specification:

Rated Voltage: 250V AC.DC
Rated Current: 3A
Contact Resistance: 0.02 Ohm max
Insulation Resistance: 1000M Ohm min
Withstand voltage: 1000V AC/MIN
Temperature range for usage : -25°C~+85°C
P.C board thickness : 0.8~1.6mm

Material:

Housing: PA66 (PA66) UL94V-2
Contacts: Brass or Phosphor Bronze
Plating: Tin 50u" over 100u" nickel
Wire range : AWG#30~#22
Color : White

Terminal

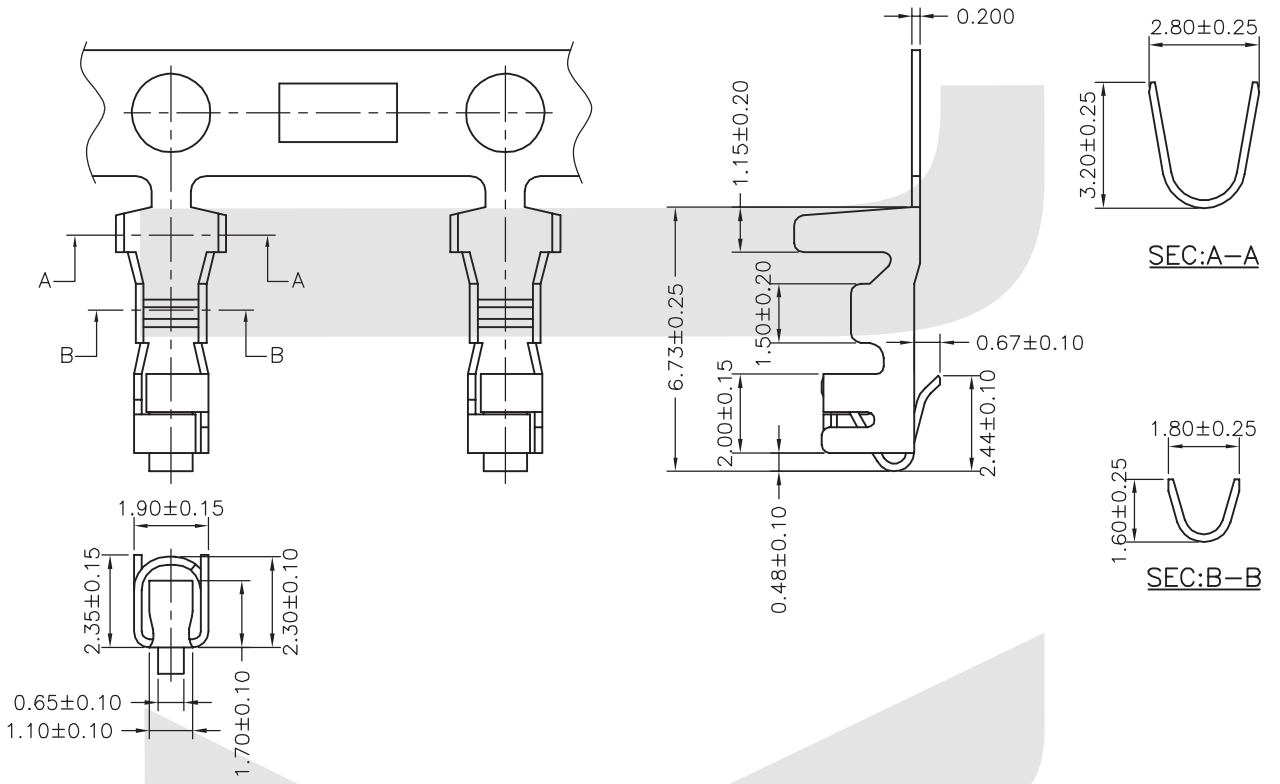

ORDER INFORMATION

Product NO.: KLS1-2.50-T

Type: H=Housing T=Terminal
S=Straight Male pin R1=Right Male pin
R=High Right With Ears Male pin

Pitch: 2.50=2.50mm

PCB Connector Series

KLS1-2.50 Pitch=2.50mm TYPE



Electrical Specification:

Rated Voltage: 250V AC.DC
Rated Current: 3A
Contact Resistance: 0.02 Ohm max
Insulation Resistance: 1000M Ohm min
Withstand voltage: 1000V AC/MIN
Temperature range for usage : -25°C~+85°C
P.C board thickness : 0.8~1.6mm

Material:

Housing: PA66 (PA66) UL94V-2
Contacts: Brass or Phosphor Bronze
Plating: Tin 50u" over 100u" nickel
Wire range : AWG#30~#22
Color : White

Straight Male pin

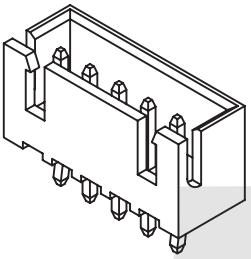

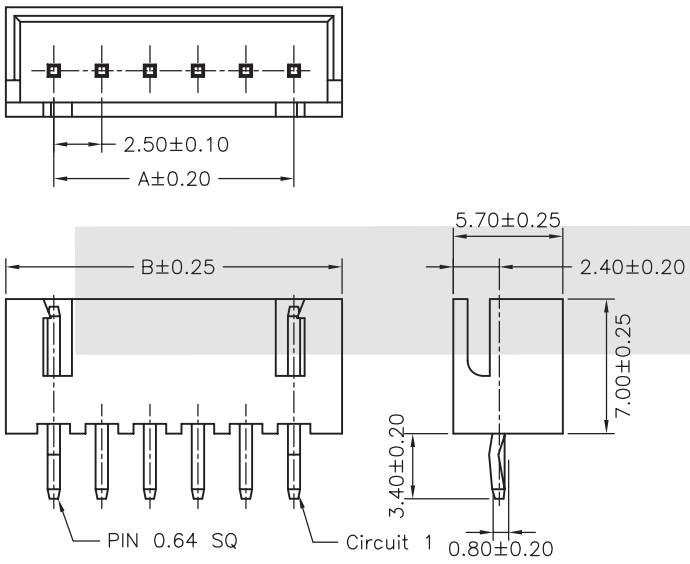

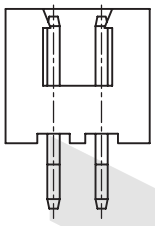

02P

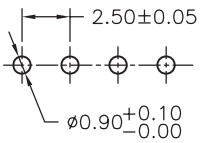

P.C.B LAYOUT

PART NO.	Dimensions	
	A	B
02	2.50	7.50
03	5.00	10.00
04	7.50	12.50
05	10.00	15.00
06	12.50	17.50
07	15.00	20.00
08	17.50	22.50
09	20.00	25.00
10	22.50	27.50
11	25.00	30.00
12	27.50	32.50
13	30.00	35.00
14	32.50	37.50
15	35.00	40.00
16	37.50	42.50
17	40.00	45.00
18	42.50	47.50
19	45.00	50.00
20	47.50	52.50

ORDER INFORMATION

Product NO.: KLS1-2.50-XX-S

Type: H=Housing T=Terminal
S=Straight Male pin R1=Right Male pin
R=High Right With Ears Male pin

Pitch: 2.50=2.50mm

PIN Number:2~ 20pin

PCB Connector Series

KLS1-2.50 Pitch=2.50mm TYPE

Electrical Specification:

Rated Voltage: 250V AC.DC
Rated Current: 3A
Contact Resistance: 0.02 Ohm max
Insulation Resistance: 1000M Ohm min
Withstand voltage: 1000V AC/MIN
Temperature range for usage : -25°C~+85°C
P.C board thickness : 0.8~1.6mm



Material:

Housing: PA66 (PA66) UL94V-2
Contacts: Brass or Phosphor Bronze
Plating: Tin 50u" over 100u" nickel
Wire range : AWG#30~#22
Color : White

Right Male pin

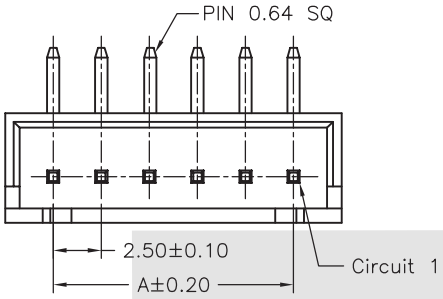

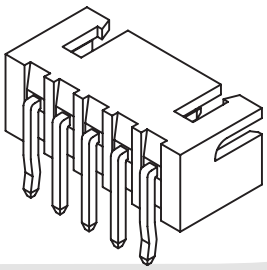

PART NO.	Dimensions	
	A	B
02	2.50	7.50
03	5.00	10.00
04	7.50	12.50
05	10.00	15.00
06	12.50	17.50
07	15.00	20.00
08	17.50	22.50
09	20.00	25.00
10	22.50	27.50
11	25.00	30.00
12	27.50	32.50
13	30.00	35.00
14	32.50	37.50
15	35.00	40.00
16	37.50	42.50
17	40.00	45.00
18	42.50	47.50
19	45.00	50.00
20	47.50	52.50

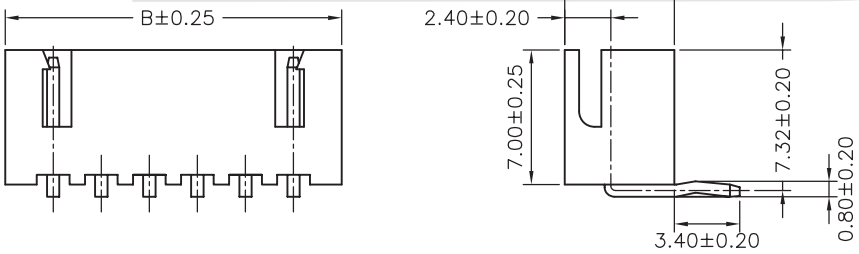

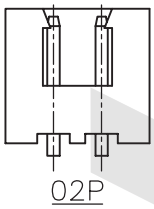

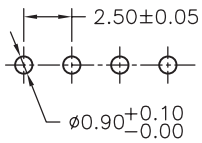

P.C.B LAYOUT

ORDER INFORMATION

Product NO.: KLS1-2.50-XX-R1

Type: H=Housing T=Terminal
S=Straight Male pin R1=Right Male pin
R=High Right With Ears Male pin
Pitch: 2.50=2.50mm
PIN Number:2~ 20pin

PCB Connector Series

KLS1-2.50 Pitch=2.50mm TYPE

Electrical Specification:

Rated Voltage: 250V AC.DC
Rated Current: 3A
Contact Resistance: 0.02 Ohm max
Insulation Resistance: 1000M Ohm min
Withstand voltage: 1000V AC/MIN
Temperature range for usage : -25°C~+85°C
P.C board thickness : 0.8~1.6mm



Material:

Housing: PA66 (PA66) UL94V-2
Contacts: Brass or Phosphor Bronze
Plating: Tin 50u" over 100u" nickel
Wire range : AWG#30~#22
Color : White

High Right Male pin

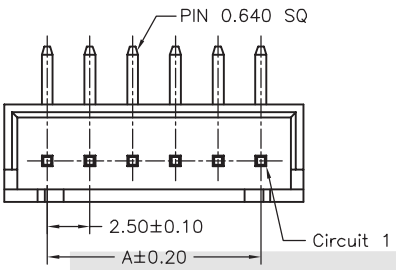

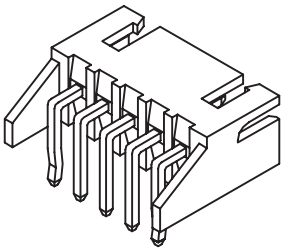

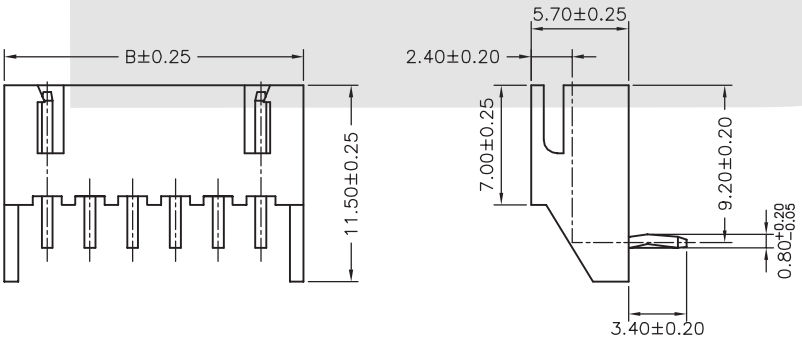

PART NO.	Dimensions	
	A	B
02	2.50	7.50
03	5.00	10.00
04	7.50	12.50
05	10.00	15.00
06	12.50	17.50
07	15.00	20.00
08	17.50	22.50
09	20.00	25.00
10	22.50	27.50
11	25.00	30.00
12	27.50	32.50
13	30.00	35.00
14	32.50	37.50
15	35.00	40.00
16	37.50	42.50
17	40.00	45.00
18	42.50	47.50
19	45.00	50.00
20	47.50	52.50

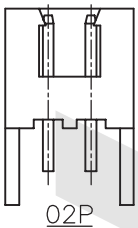

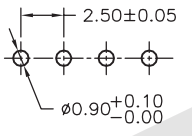

ORDER INFORMATION

Product NO.: KLS1-2.50-XX-R

Type: H=Housing T=Terminal
S=Straight Male pin R1=Right Male pin
R=High Right With Ears Male pin
PIN Number:2~ 20pin
Pitch: 2.50=2.50mm

PCB Connector Series

KLS1-XA1-2.50 Pitch=2.50mm TYPE

Electrical Specification:

Rated Voltage: 250V AC.DC
Rated Current: 3A
Contact Resistance: 0.02 Ohm max
Insulation Resistance: 1000M Ohm min
Withstand voltage: 1000V AC/MIN
Temperature range for usage : -40°C~+105°C
P.C board thickness : 0.8~1.6mm

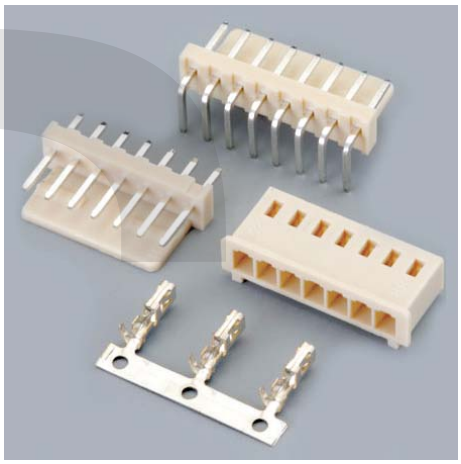

Material:

Housing: PA66 UL94V-2
Contacts: Phosphor Bronze
Plating: Tin 50u" over 100u" nickel
Wire range : AWG#30~#22

Housing

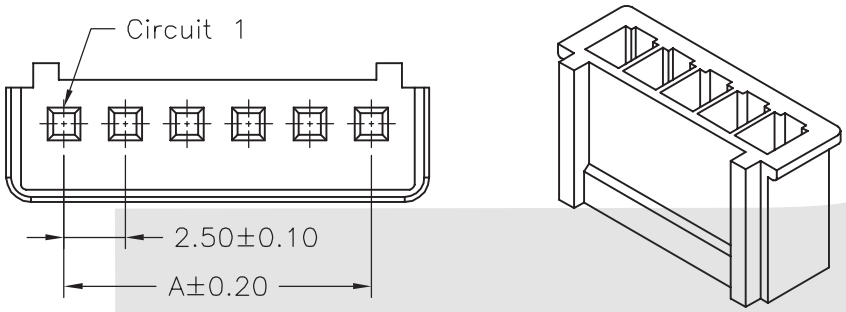

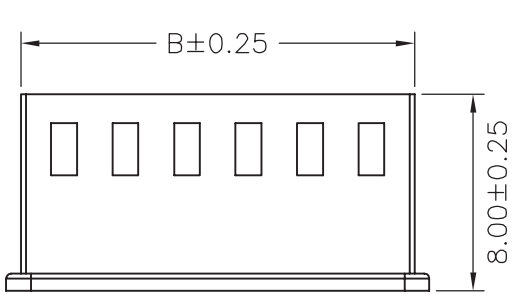

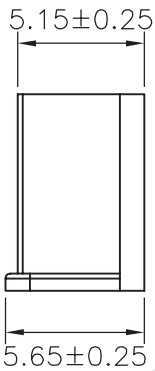

PART NO.	Dimensions	
	A	B
02	2.50	6.00
03	5.00	8.50
04	7.50	11.00
05	10.00	13.50
06	12.50	16.00
07	15.00	18.50
08	17.50	21.00
09	20.00	23.50
10	22.50	26.00
11	25.00	28.50
12	27.50	31.00
13	30.00	33.50
14	32.50	36.00
15	35.00	38.50
16	37.50	41.00
17	40.00	43.50
18	42.50	46.00
19	45.00	48.50
20	47.50	51.00

ORDER INFORMATION

Product NO.: KLS1-XA1-2.50-XX-H

Series No.
Pitch: 2.50=2.50mm
PIN Number: 2 ~ 20Pin
Type: H=Housing
S=Straight Male pin
T=Terminal
R=Right Male pin

PCB Connector Series

KLS1-XA1-2.50 Pitch=2.50mm TYPE

Electrical Specification:

Rated Voltage: 250V AC.DC
Rated Current: 3A
Contact Resistance: 0.02 Ohm max
Insulation Resistance: 1000M Ohm min
Withstand voltage: 1000V AC/MIN
Temperature range for usage : -40°C~+105°C
P.C board thickness : 0.8~1.6mm

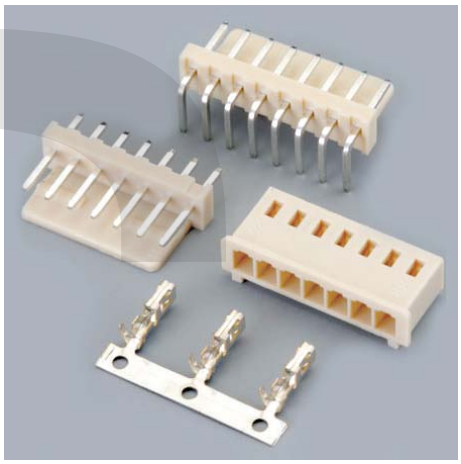

Material:

Contacts: Phosphor Bronze
Plating: Tin 50u" over 100u" nickel
Wire range : AWG#30~#22

Terminal

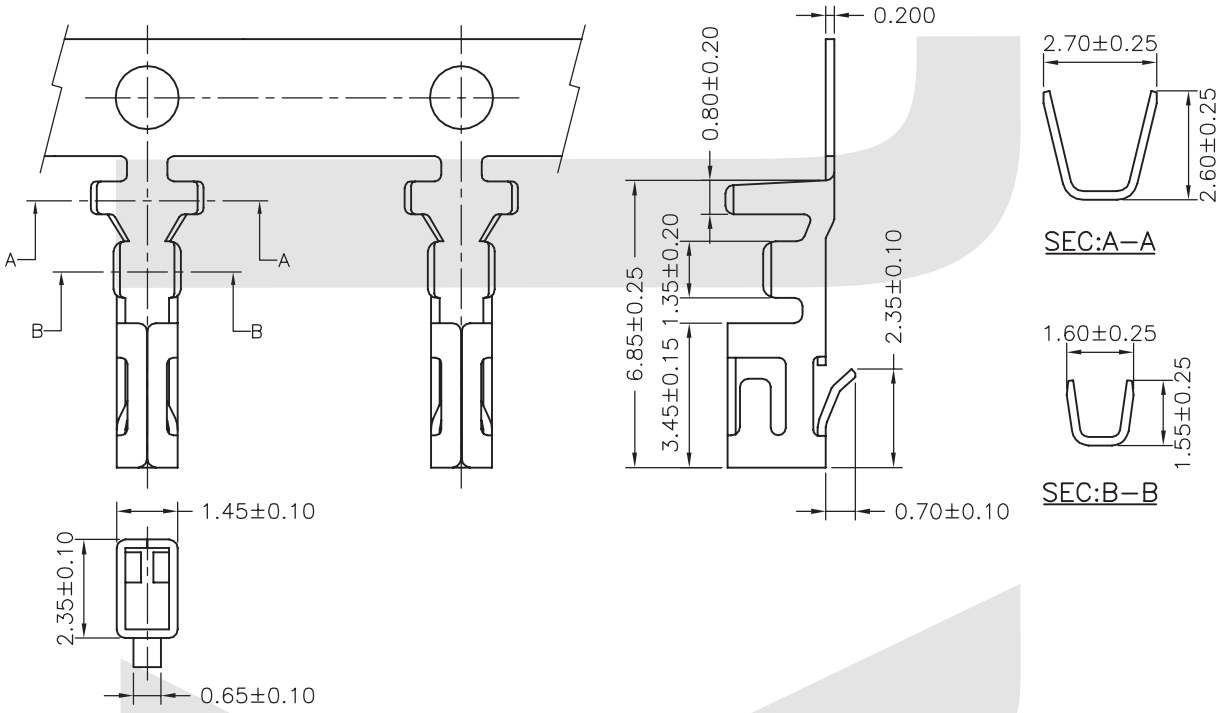

ORDER INFORMATION

Product NO.: KLS1-XA1-2.50-T

Type: H=Housing T=Terminal
S=Straight Male pin R=Right Male pin

Series No.
Pitch: 2.50=2.50mm

PCB Connector Series

KLS1-XA1-2.50 Pitch=2.50mm TYPE

Electrical Specification:

Rated Voltage: 250V AC.DC
Rated Current: 3A
Contact Resistance: 0.02 Ohm max
Insulation Resistance: 1000M Ohm min
Withstand voltage: 1000V AC/MIN
Temperature range for usage : -40°C~+105°C
P.C board thickness : 0.8~1.6mm

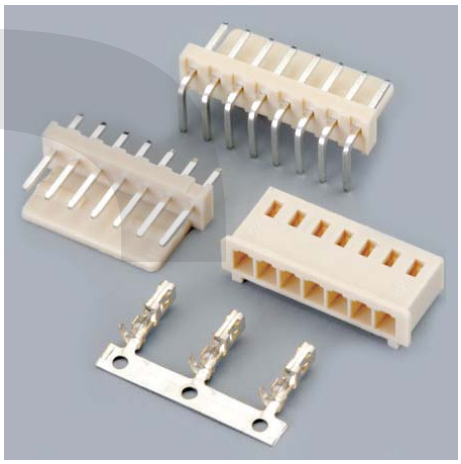

Material:

Housing: PA66 UL94V-2
Contacts: Brass
Plating: Tin 50u" over 100u" nickel
Wire range : AWG#30~#22

Straight Male pin

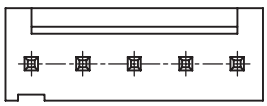

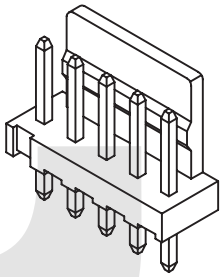

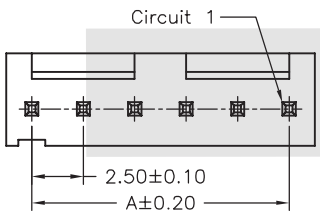

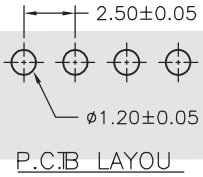

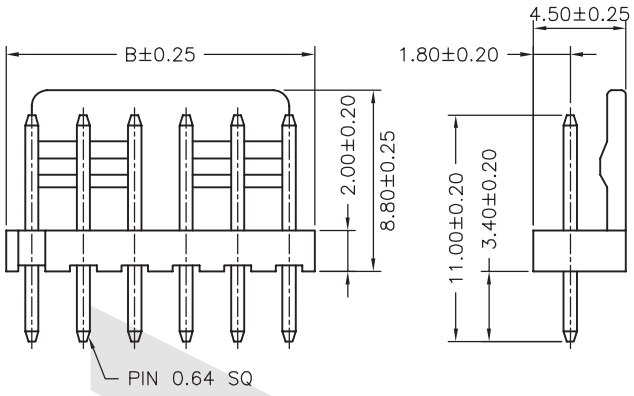

PART NO.	Dimensions	
	A	B
02	2.50	5.00
03	5.00	7.50
04	7.50	10.00
05	10.00	12.50
06	12.50	15.00
07	15.00	17.50
08	17.50	20.00
09	20.00	22.50
10	22.50	25.00
11	25.00	27.50
12	27.50	30.00
13	30.00	32.50
14	32.50	35.00
15	35.00	37.50
16	37.50	40.00
17	40.00	42.50
18	42.50	45.00
19	45.00	47.50
20	47.50	50.00

ORDER INFORMATION

Product NO.: KLS1-XA1-2.50-XX-S

Series No.
Pitch: 2.50=2.50mm
Type: H=Housing
S=Straight Male pin
T=Terminal
R=Right Male pin
PIN Number: 2 ~ 20Pin

PCB Connector Series

KLS1-XA1-2.50 Pitch=2.50mm TYPE

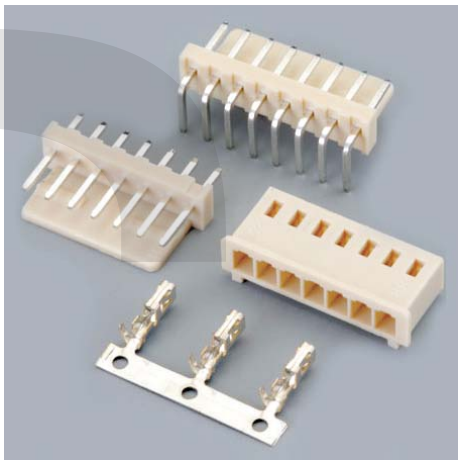

Electrical Specification:

Rated Voltage: 250V AC.DC
Rated Current: 3A
Contact Resistance: 0.02 Ohm max
Insulation Resistance: 1000M Ohm min
Withstand voltage: 1000V AC/MIN
Temperature range for usage : -40ºC~+105ºC
P.C board thickness : 0.8~1.6mm

Material:

Housing: PA66 UL94V-2
Contacts: Brass
Plating: Tin 50u" over 100u" nickel
Wire range : AWG#30~#22

Right Male pin

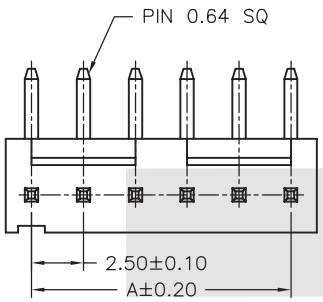

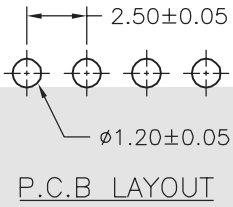

P.C.B LAYOUT

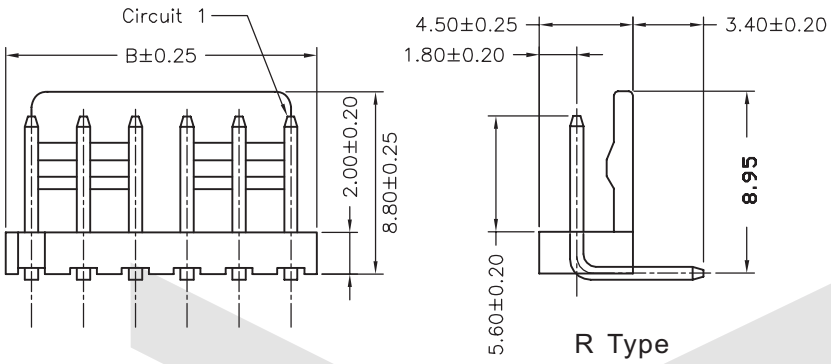

R Type

PART NO.	Dimensions	
	A	B
02	2.50	5.00
03	5.00	7.50
04	7.50	10.00
05	10.00	12.50
06	12.50	15.00
07	15.00	17.50
08	17.50	20.00
09	20.00	22.50
10	22.50	25.00
11	25.00	27.50
12	27.50	30.00
13	30.00	32.50
14	32.50	35.00
15	35.00	37.50
16	37.50	40.00
17	40.00	42.50
18	42.50	45.00
19	45.00	47.50
20	47.50	50.00

ORDER INFORMATION

Product NO.: KLS1-XA1-2.50-XX-R

Series No.
Pitch: 2.50=2.50mm
Type: H=Housing S=Straight Male pin T=Terminal R=Right Male pin
PIN Number: 2 ~ 20Pin

PCB Connector Series

KLS1-XL4-2.50mm Pitch=2.50mm TYPE

Electrical Specification:

Rated Voltage: 250V AV.DC
Rated Current: 3A
Contact Resistance: 0.02Ω max
Insulation Resistance: 1000MΩ min
Withstand voltage: 1000V AC/min
Temperature range for usage : -25ºC~+85ºC
P.C board thickness : 0.8~1.6mm

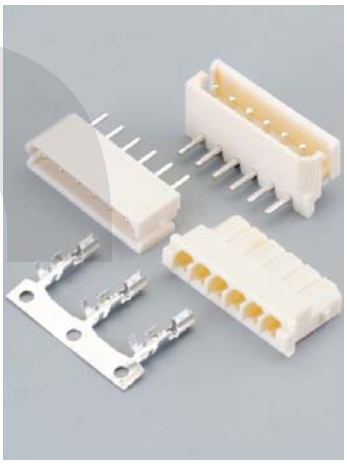

Material:

Housing: PA66 (PA66) UL94V-0
Contacts: Phosphor Bronze
Plating: Tin 50u" over 100u" nickel
Wire range : AWG#30~#22

Housing

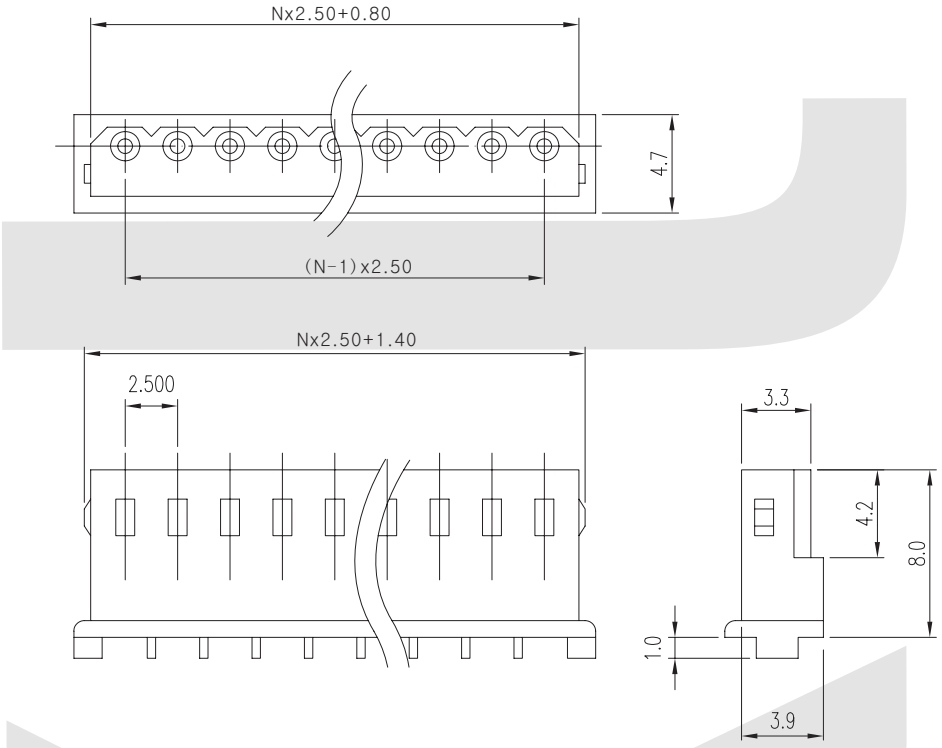

ORDER INFORMATION

Product NO.: KLS1-XL4-2.50-XX-H

Series No.
Pitch 2.50=2.50mm
Type: H=Housing
S=Straight Male pin
T=Terminal
R=Right Male pin
PIN Number:2~20pin

KLS electronic
www.cnkls.com

PCB Connector Series

KLS1-XL4-2.50mm Pitch=2.50mm TYPE

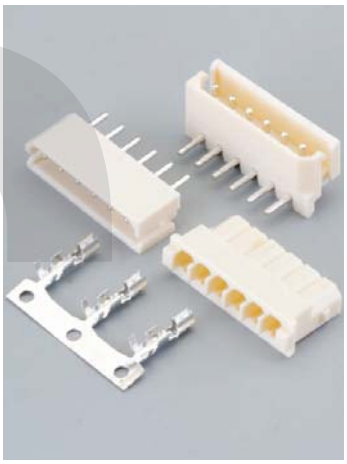

Electrical Specification:

Rated Voltage: 250V AV.DC
Rated Current: 3A
Contact Resistance: 0.02Ω max
Insulation Resistance: 1000MΩ min
Withstand voltage: 1000V AC/min
Temperature range for usage : -25°C~+85°C
P.C board thickness : 0.8~1.6mm

Material:

Contacts: Phosphor Bronze
Plating: Tin 50u" over 100u" nickel
Wire range : AWG#30~#22

Terminal

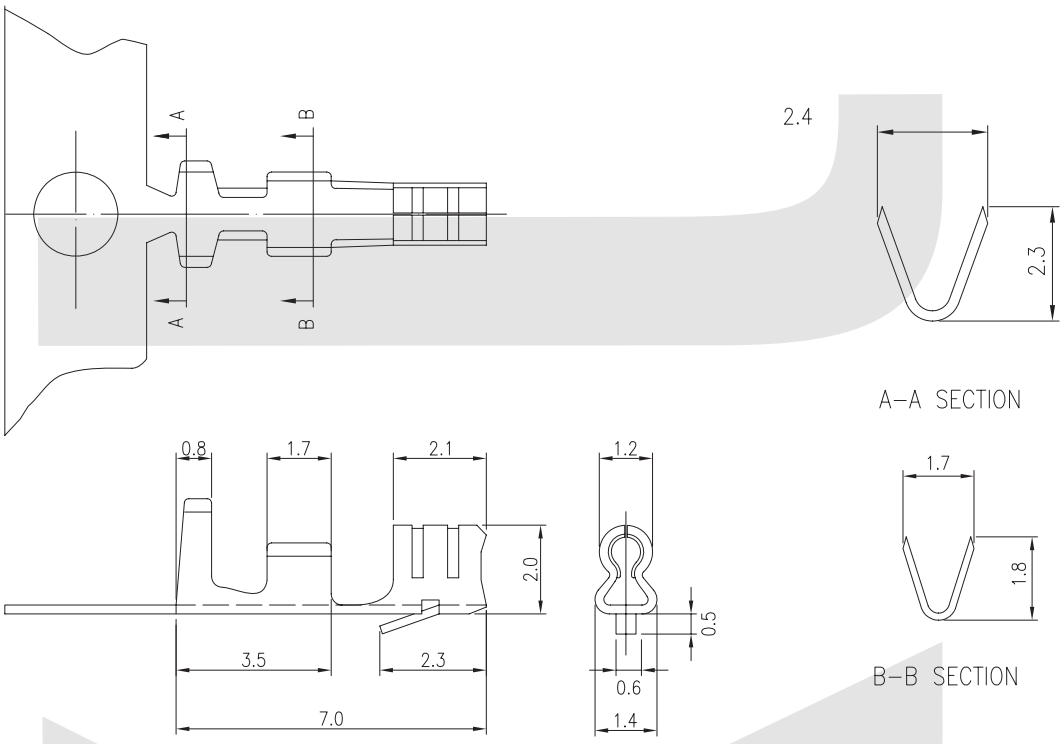

ORDER INFORMATION

Product NO.: KLS1-XL4-2.50-T

Series No.
Pitch 2.50=2.50mm
Type: T=Terminal

PCB Connector Series

KLS1-XL4-2.50mm Pitch=2.50mm TYPE

Electrical Specification:

Rated Voltage: 250V AV.DC
Rated Current: 3A
Contact Resistance: 0.02Ω max
Insulation Resistance: 1000MΩ min
Withstand voltage: 1000V AC/min
Temperature range for usage : -25ºC~+85ºC
P.C board thickness : 0.8~1.6mm

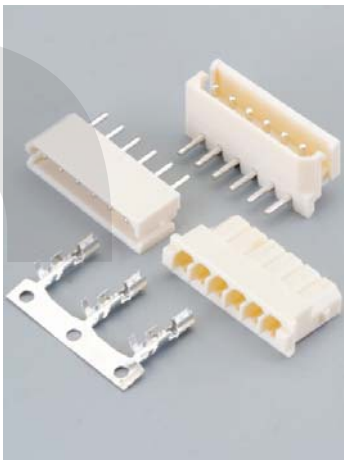

Material:

Housing: PA66 (PA66) UL94V-0
Contacts: Brass
Plating: Tin 50u" over 100u" nickel

Straight Male pin

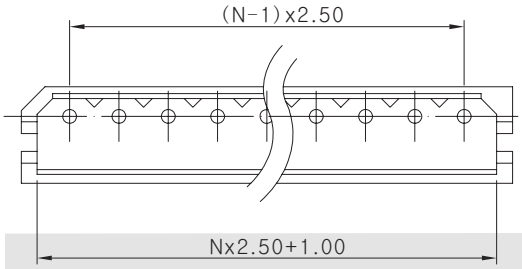

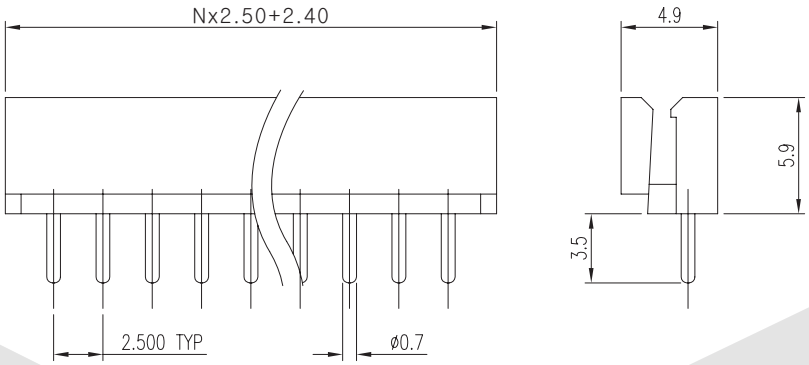

ORDER INFORMATION

Product NO.: KLS1-XL4-2.50-XX-S

Series No.
Pitch 2.50=2.50mm
Type: H=Housing
S=Straight Male pin
T=Terminal
R=Right Male pin
PIN Number:2~20pin

PCB Connector Series

KLS1-XL4-2.50mm Pitch=2.50mm TYPE

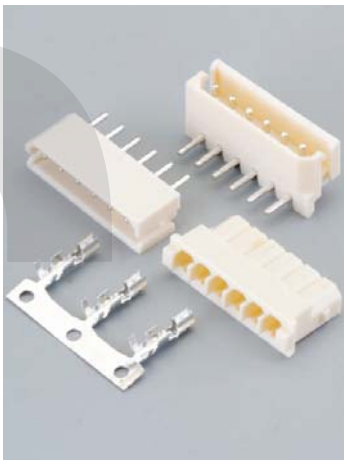

Electrical Specification:

Rated Voltage: 250V AV.DC
Rated Current: 3A
Contact Resistance: 0.02Ω max
Insulation Resistance: 1000MΩ min
Withstand voltage: 1000V AC/min
Temperature range for usage : -25ºC~+85ºC
P.C board thickness : 0.8~1.6mm

Material:

Housing: PA66 (PA66) UL94V-0
Contacts: Brass
Plating: Tin 50u" over 100u" nickel

Right Male pin

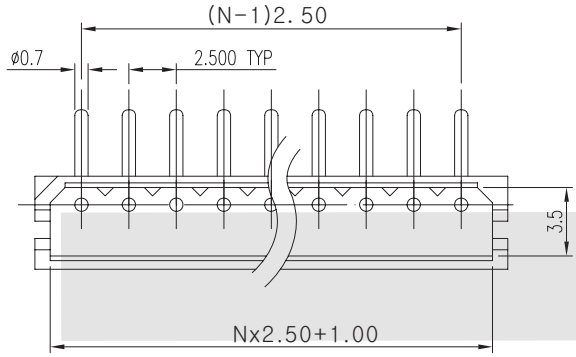

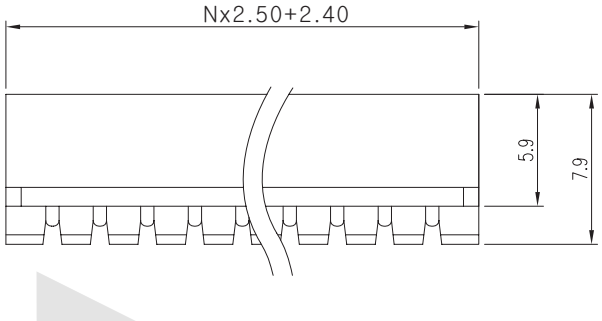

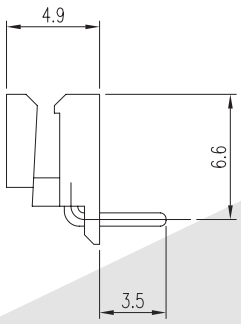

ORDER INFORMATION

Product NO.: KLS1-XL4-2.50-XX-R

Series No.
Pitch 2.50=2.50mm
Type: H=Housing
S=Straight Male pin
T=Terminal
R=Right Male pin
PIN Number:2~20pin

PCB Connector Series

KLS1-XL5-2.50mm Pitch=2.50mm TYPE

Electrical Specification:

Rated Voltage: 250V AV.DC
Rated Current: 3A
Contact Resistance: 0.02Ω max
Insulation Resistance: 1000MΩ min
Withstand voltage: 800V AC/min
Temperature range for usage : -40°C~+105°C
P.C board thickness : 0.8~1.6mm



Material:

Housing: PA66 (PA66) UL94V-0
Contacts: Phosphor Bronze
Plating: Tin 50u" over 100u" nickel
Wire range : AWG#30~#22

Housing

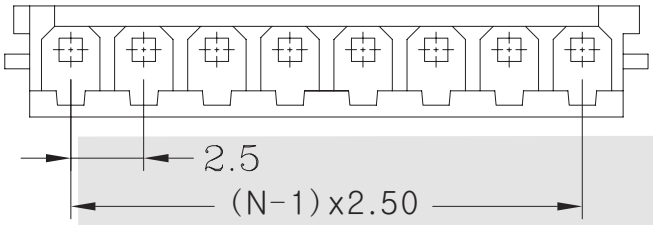

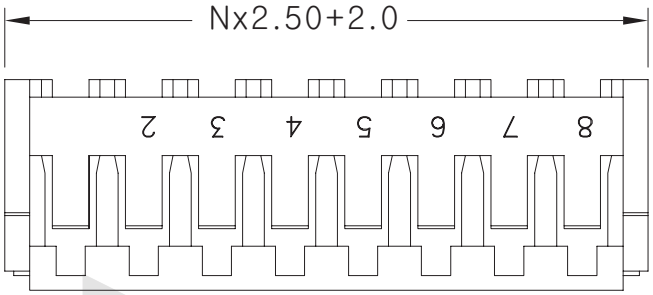

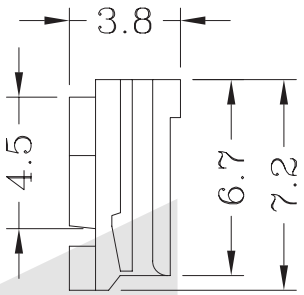

ORDER INFORMATION

Product NO.: KLS1-XL5-2.50-XX-H

Series No.
Pitch 2.50=2.50mm
Type: H=Housing
S=Straight Male pin
T=Terminal
R=Right Male pin
PIN Number: 2 ~ 20Pin

PCB Connector Series

KLS1-XL5-2.50mm Pitch=2.50mm TYPE

Electrical Specification:

Rated Voltage: 250V AV.DC
Rated Current: 3A
Contact Resistance: 0.02Ω max
Insulation Resistance: 1000MΩ min
Withstand voltage: 800V AC/min
Temperature range for usage : -40°C~+105°C
P.C board thickness : 0.8~1.6mm



Material:

Housing: PA66 (PA66) UL94V-0
Contacts: Phosphor Bronze
Plating: Tin 50u" over 100u" nickel
Wire range : AWG#30~#22

Terminal

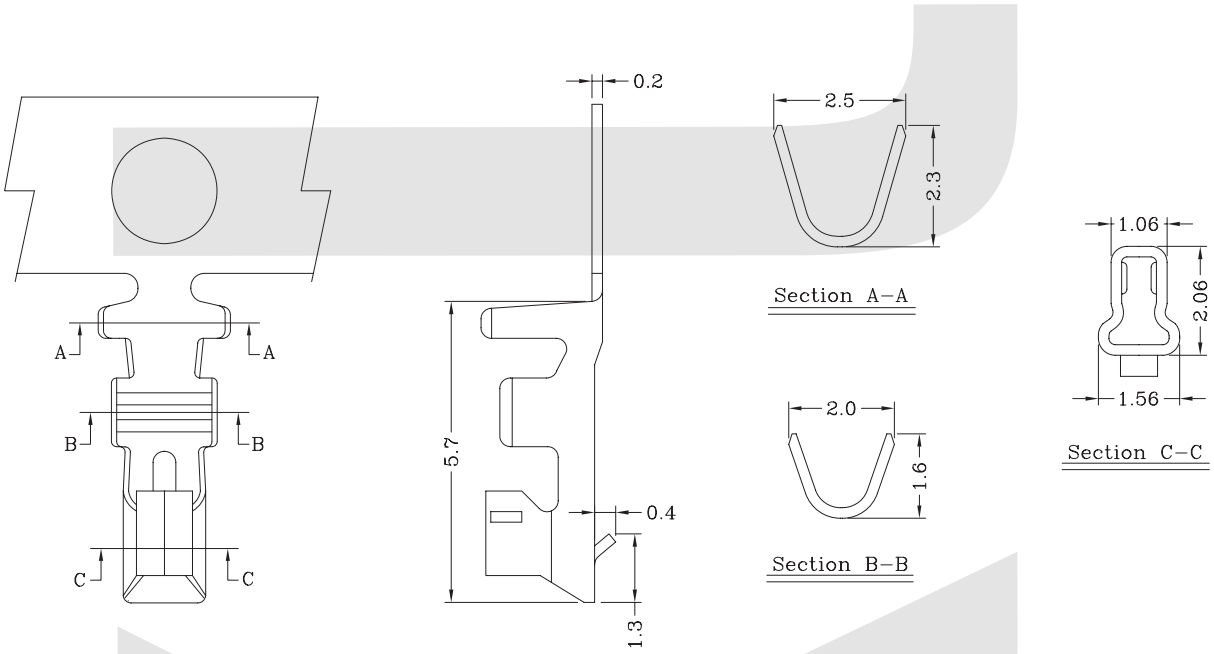

ORDER INFORMATION

Product NO.: KLS1-XL5-2.50-T

Series No.
Pitch 2.50=2.50mm
Type: H=Housing T=Terminal
S=Straight Male pin R=Right Male pin

PCB Connector Series

KLS1-XL5-2.50mm Pitch=2.50mm TYPE



Electrical Specification:

Rated Voltage: 250V AV.DC
Rated Current: 3A
Contact Resistance: 0.02Ω max
Insulation Resistance: 1000MΩ min
Withstand voltage: 800V AC/min
Temperature range for usage : -40°C~+105°C
P.C board thickness : 0.8~1.6mm

Material:

Housing: PA66 (PA66) UL94V-0
Contacts: Brass
Plating: Tin 50u" over 100u" nickel

Straight Male pin

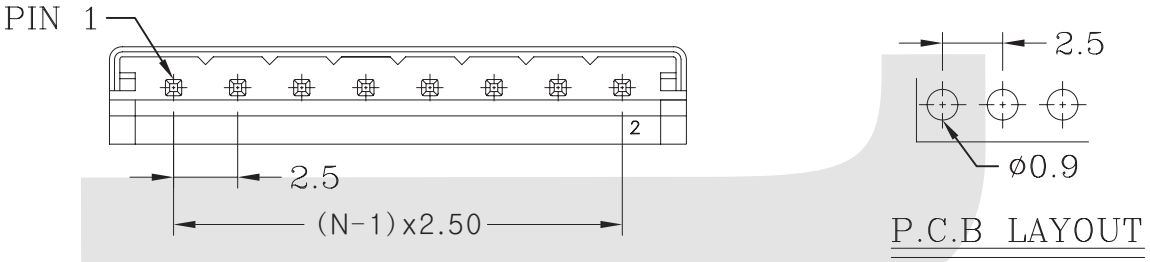

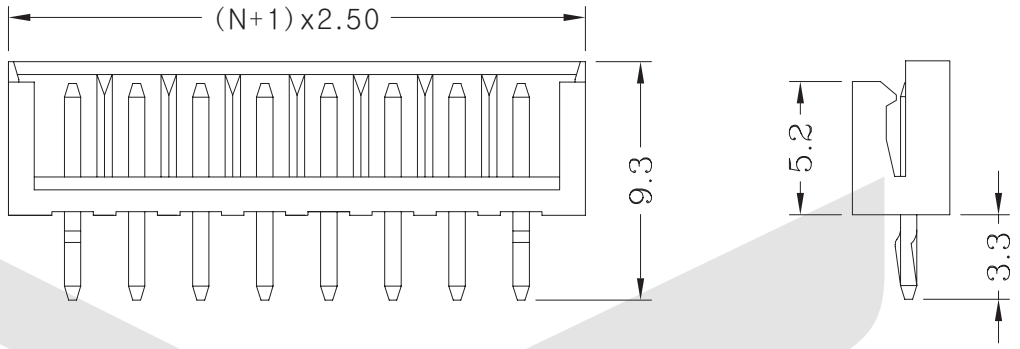

ORDER INFORMATION

Product NO.: KLS1-XL5-2.50-XX-S

Series No.
Pitch 2.50=2.50mm
Type: H=Housing
S=Straight Male pin
T=Terminal
R=Right Male pin
PIN Number: 2 ~ 20Pin

PCB Connector Series

KLS1-XL5-2.50mm Pitch=2.50mm TYPE

Electrical Specification:

Rated Voltage: 250V AV.DC
Rated Current: 3A
Contact Resistance: 0.02Ω max
Insulation Resistance: 1000MΩ min
Withstand voltage: 800V AC/min
Temperature range for usage : -40°C~+105°C
P.C board thickness : 0.8~1.6mm



Material:

Housing: PA66 (PA66) UL94V-0
Contacts: Phosphor Bronze
Plating: Tin 50u" over 100u" nickel
Wire range : AWG#30~#22

Right Male pin

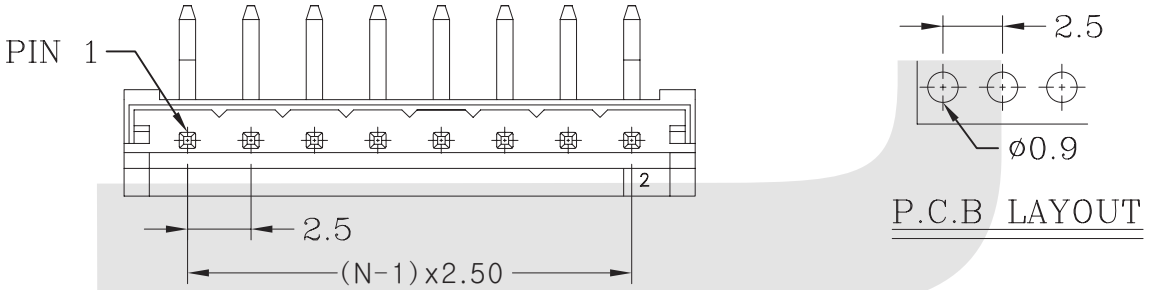

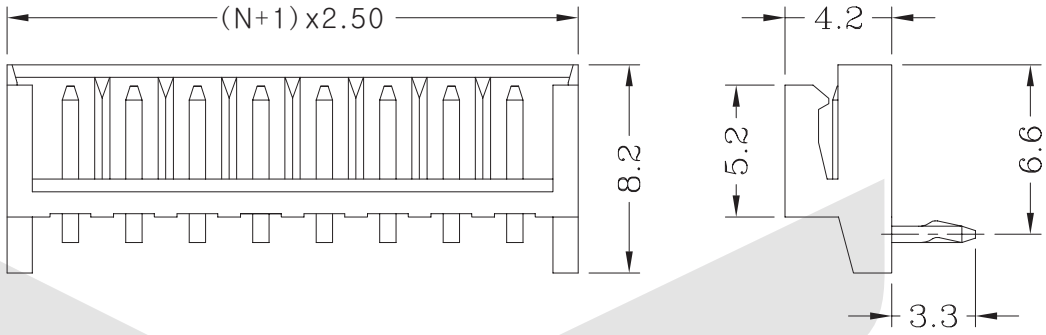

ORDER INFORMATION

Product NO.: KLS1-XL5-2.50-XX-R

Series No.
Pitch 2.50=2.50mm
Type: H=Housing
S=Straight Male pin
T=Terminal
R=Right Male pin
PIN Number: 2 ~ 20Pin

PCB Connector Series

KLS1-XM1-2.50 Pitch=2.50mm TYPE

Electrical Specification:

Rated Voltage: 250V AC.DC
Rated Current: 3A
Contact Resistance: 0.02Ω max
Insulation Resistance: 1000MΩ min
Withstand voltage: 1000V AC/MIN
Temperature range for usage : -40°C~+105°C
P.C board thickness : 0.8~1.6mm



Material:

Housing: PA66 (PA66) UL94V-2
Contacts: Phosphor Bronze
Plating: Tin 50u" over 100u" nickel
Wire range : AWG#30~#22

Female Housing

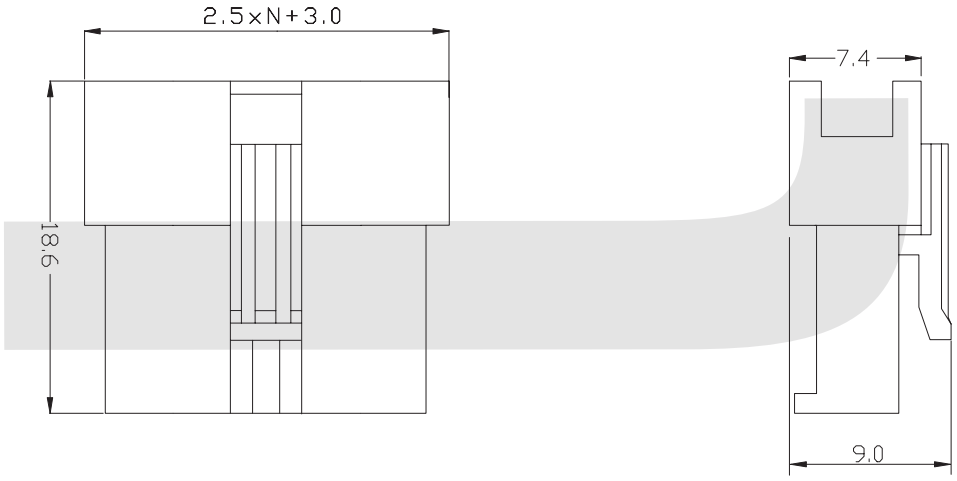

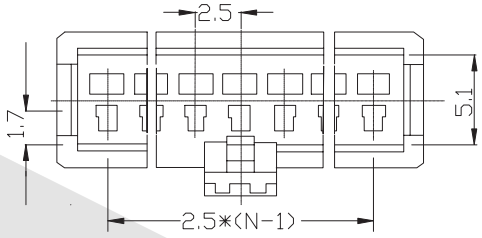

ORDER INFORMATION

Product NO.: KLS1-XM1-2.50 -XX-FH

Series No.
Pitch: 2.50=2.50mm
Pin Number: 2~18Pin
Type:
MH=Male Housing
FH=Female Housing
FT=Female Terminal
MT=Male Terminal

PCB Connector Series

KLS1-XM1-2.50 Pitch=2.50mm TYPE

Electrical Specification:

Rated Voltage: 250V AC.DC
Rated Current: 3A
Contact Resistance: 0.02Ω max
Insulation Resistance: 1000MΩ min
Withstand voltage: 1000V AC/MIN
Temperature range for usage : -40°C~+105°C
P.C board thickness : 0.8~1.6mm



Material:

Housing: PA66 (PA66) UL94V-2
Contacts: Phosphor Bronze
Plating: Tin 50u" over 100u" nickel
Wire range : AWG#30~#22

Male Terminal

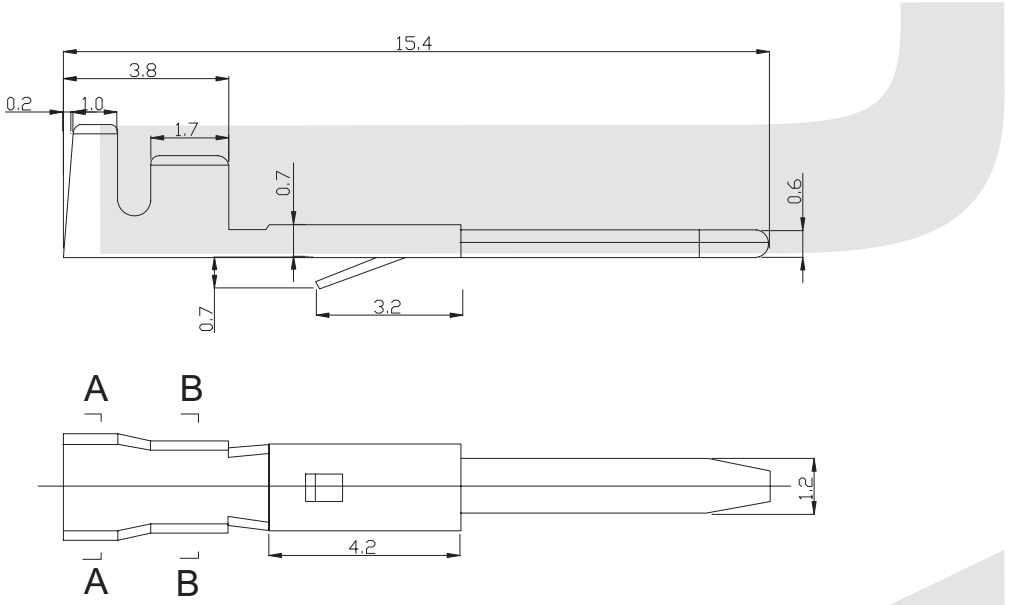

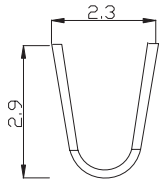

A–A

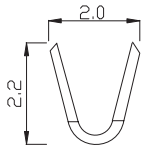

B–B

ORDER INFORMATION

Product NO.: KLS1-XM1-2.50 -MT

Series No.
Pitch: 2.50=2.50mm

Type:
MH=Male Housing
FH=Female Housing
FT=Female Terminal
MT=Male Terminal

I

PCB Connector Series

KLS1-XM1-2.50 Pitch=2.50mm TYPE



Electrical Specification:

Rated Voltage: 250V AC.DC
Rated Current: 3A
Contact Resistance: 0.02Ω max
Insulation Resistance: 1000MΩ min
Withstand voltage: 1000V AC/MIN
Temperature range for usage : -40°C~+105°C
P.C board thickness : 0.8~1.6mm

Material:

Housing: PA66 (PA66) UL94V-2
Contacts: Phosphor Bronze
Plating: Tin 50u" over 100u" nickel
Wire range : AWG#30~#22

Male Housing

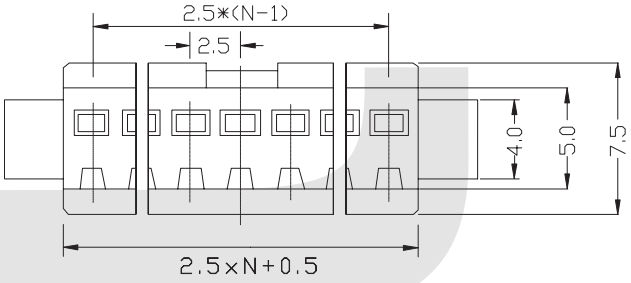

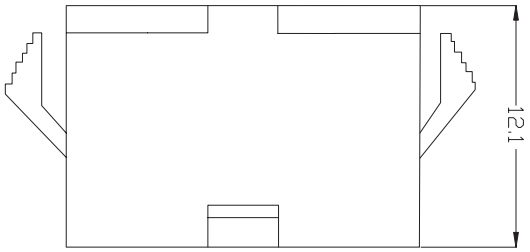

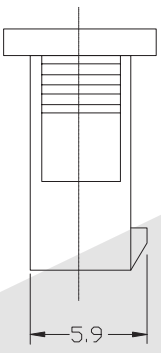

ORDER INFORMATION

Product NO.: KLS1-XM1-2.50 -XX-MH

Series No.
Pitch: 2.50=2.50mm

Type:
MH=Male Housing
FH=Female Housing

Pin Number: 2~18Pin

FT=Female Terminal
MT=Male Terminal

PCB Connector Series

KLS1-XM1-2.50 Pitch=2.50mm TYPE

Electrical Specification:

Rated Voltage: 250V AC.DC
Rated Current: 3A
Contact Resistance: 0.02Ω max
Insulation Resistance: 1000MΩ min
Withstand voltage: 1000V AC/MIN
Temperature range for usage : -40°C~+105°C
P.C board thickness : 0.8~1.6mm



Material:

Housing: PA66 (PA66) UL94V-2
Contacts: Phosphor Bronze
Plating: Tin 50u" over 100u" nickel
Wire range : AWG#30~#22

Female Terminal

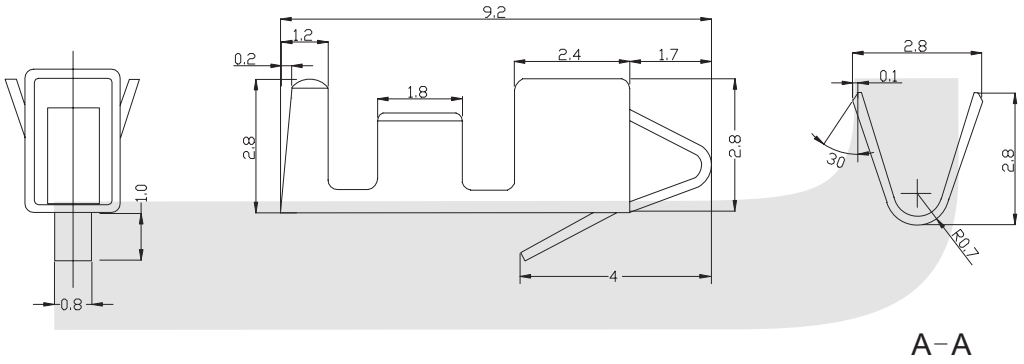

A–A

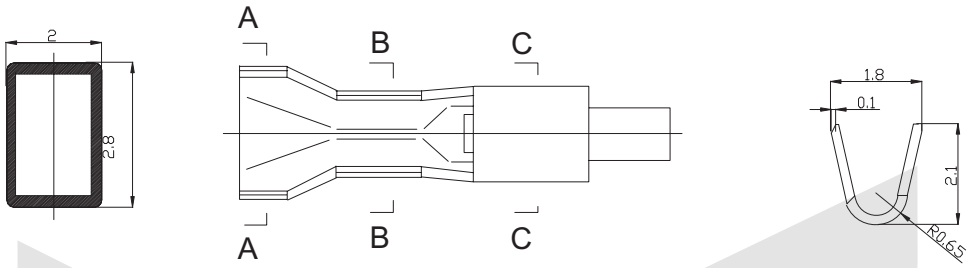

C–C B–B

ORDER INFORMATION

Product NO.: KLS1-XM1-2.50 - FT

Series No.
Pitch: 2.50=2.50mm

Type:
MH=Male Housing
FH=Female Housing
FT=Female Terminal
MT=Male Terminal

PCB Connector Series

KLS1-2.54 Pitch=2.54mm TYPE

Electrical Specification:

Rated Voltage: 250V AC.DC
Rated Current: 3A
Contact Resistance: 0.02 Ohm max
Insulation Resistance: 1000M Ohm min
Withstand voltage: 1000V AC/MIN
Temperature range for usage : -25°C~+85°C
P.C board thickness : 0.8~1.6mm



Material:

Housing: PA66 (PA66) UL94V-2
Contacts: Brass or Phosphor Bronze
Plating: Tin 50u" over 100u" nickel
Wire range : AWG#30~#22

Housing

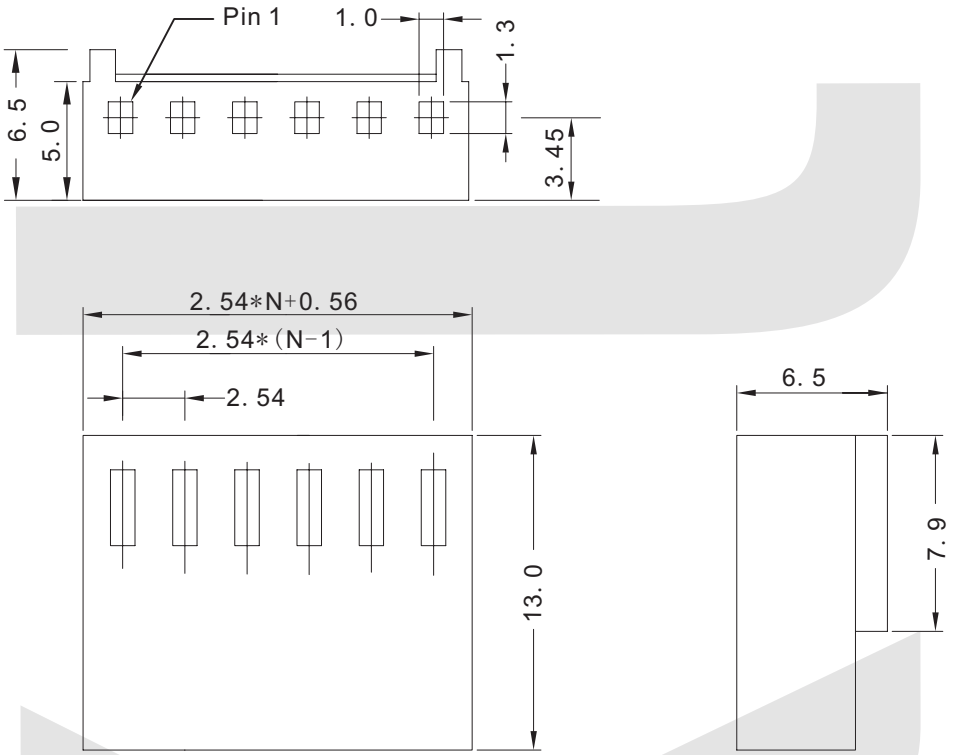

ORDER INFORMATION

Product NO.: KLS1-2.54-XX-H

Pitch: 2.54=2.54mm
PIN Number: 02 ~ 20Pin
Type: H=Housing
S=Straight Male pin
T=Terminal
R=High Right Male pin
R1=Low Right Male pin

KLS electronic
www.cnkls.com

I

PCB Connector Series

KLS1-2.54 Pitch=2.54mm TYPE



Electrical Specification:

Rated Voltage: 250V AC.DC
Rated Current: 3A
Contact Resistance: 0.02 Ohm max
Insulation Resistance: 1000M Ohm min
Withstand voltage: 1000V AC/MIN
Temperature range for usage : -25°C~+85°C
P.C board thickness : 0.8~1.6mm

Material:

Housing: PA66 (PA66) UL94V-2
Contacts: Brass or Phosphor Bronze
Plating: Tin 50u" over 100u" nickel
Wire range : AWG#30~#22

Terminal

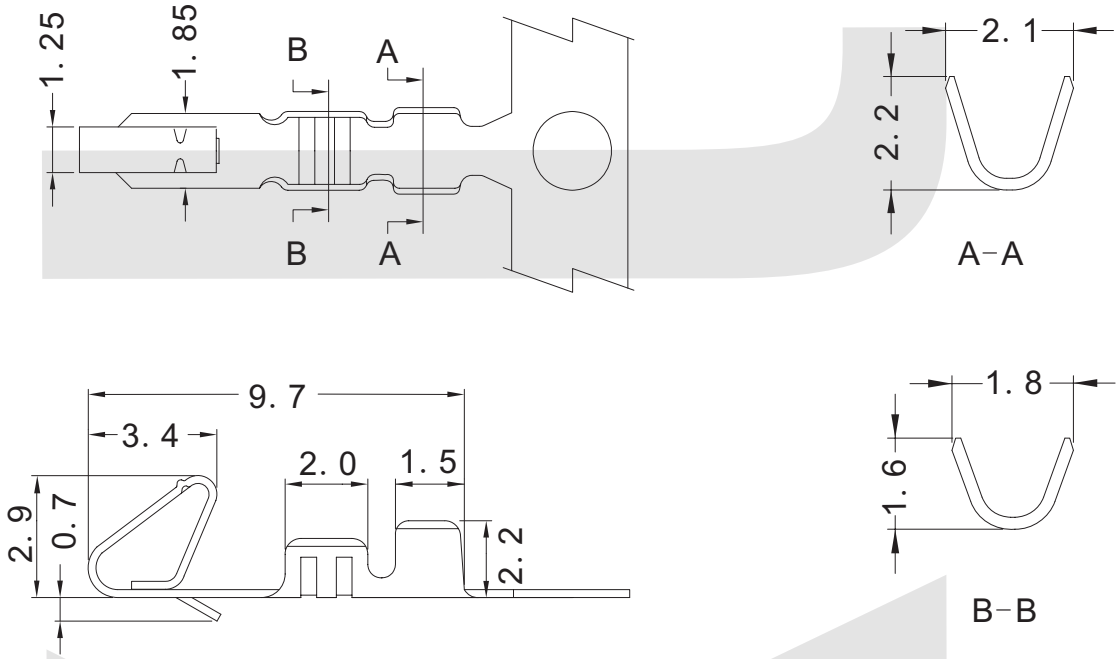

ORDER INFORMATION

Product NO.: KLS1-2.54-T

Type: H=Housing
S=Straight Male pin
T=Terminal
R=High Right Male pin
R1=Low Right Male pin

Pitch: 2.54=2.54mm

KLS electronic
www.cnkls.com

PCB Connector Series

KLS1-2.54 Pitch=2.54mm TYPE



Electrical Specification:

Rated Voltage: 250V AC.DC
Rated Current: 3A
Contact Resistance: 0.02 Ohm max
Insulation Resistance: 1000M Ohm min
Withstand voltage: 1000V AC/MIN
Temperature range for usage : -25°C~+85°C
P.C board thickness : 0.8~1.6mm

Material:

Housing: PA66 (PA66) UL94V-2
Contacts: Brass or Phosphor Bronze
Plating: Tin 50u" over 100u" nickel
Wire range : AWG#30~#22

Straight

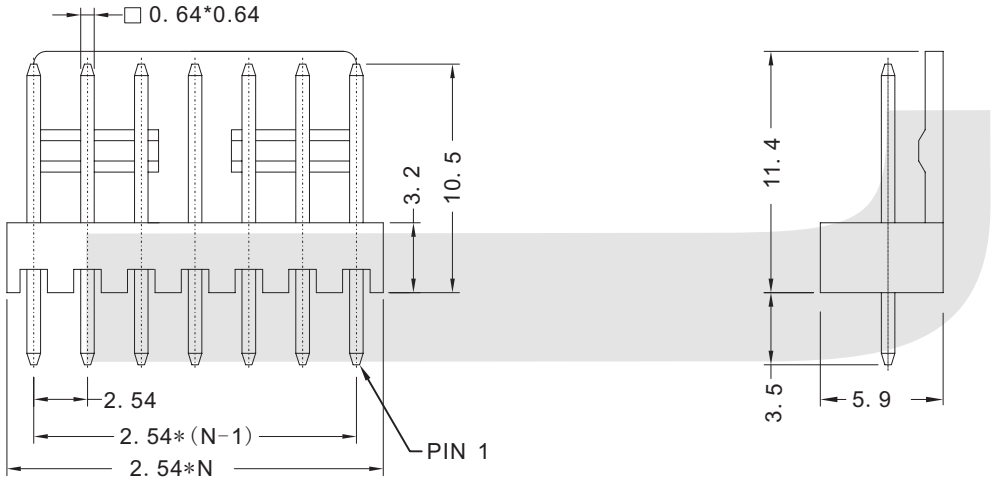

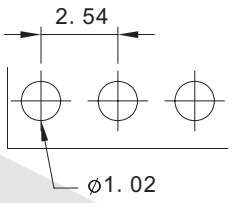

P. C. B. LAYOUT

ORDER INFORMATION

Product NO.: KLS1-2.54-XX-S

Pitch: 2.54=2.54mm
PIN Number: 02 ~ 20Pin
Type: H=Housing
S=Straight Male pin
T=Terminal
R=High Right Male pin
R1=Low Right Male pin

KLS electronic
www.cnkls.com

I

PCB Connector Series

KLS1-2.54 Pitch=2.54mm TYPE



Electrical Specification:

Rated Voltage: 250V AC.DC
Rated Current: 3A
Contact Resistance: 0.02 Ohm max
Insulation Resistance: 1000M Ohm min
Withstand voltage: 1000V AC/MIN
Temperature range for usage : -25°C~+85°C
P.C board thickness : 0.8~1.6mm

Material:

Housing: PA66 (PA66) UL94V-2
Contacts: Brass or Phosphor Bronze
Plating: Tin 50u" over 100u" nickel
Wire range : AWG#30~#22

Right angle

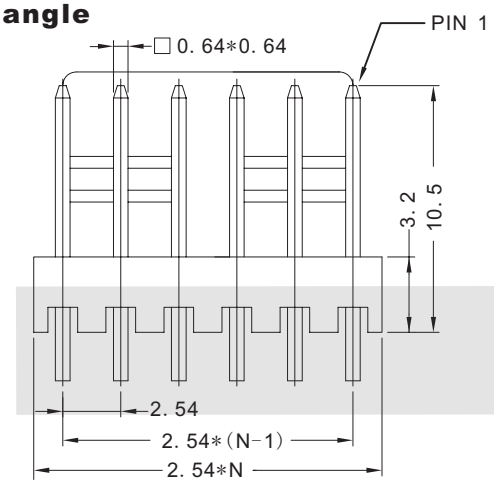

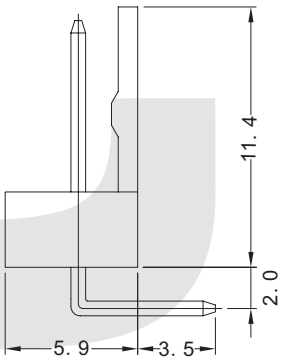

R Type

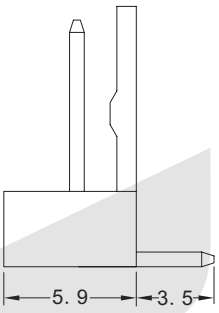

R1 Type

ORDER INFORMATION

Product NO.: KLS1-2.54-XX-R

Pitch: 2.54=2.54mm
PIN Number: 02 ~ 20Pin
Type: H=Housing
S=Straight Male pin
T=Terminal
R=High Right Male pin
R1=Low Right Male pin

PCB Connector Series

KLS1-XL2-2.54mm Pitch=2.54mm TYPE

Electrical Specification:

Rated Voltage: 250V AV.DC
Rated Current: 3A
Contact Resistance: 0.02Ω max
Insulation Resistance: 1000MΩ min
Withstand voltage: 1000V AC/min
Temperature range for usage : -40°C~+105°C
P.C board thickness : 0.8~1.6mm



Material:

Housing: PA66 (PA66) UL94V-0
Contacts: Phosphor Bronze
Plating: Tin 50u" over 100u" nickel
Wire range : AWG#30~#22

Housing

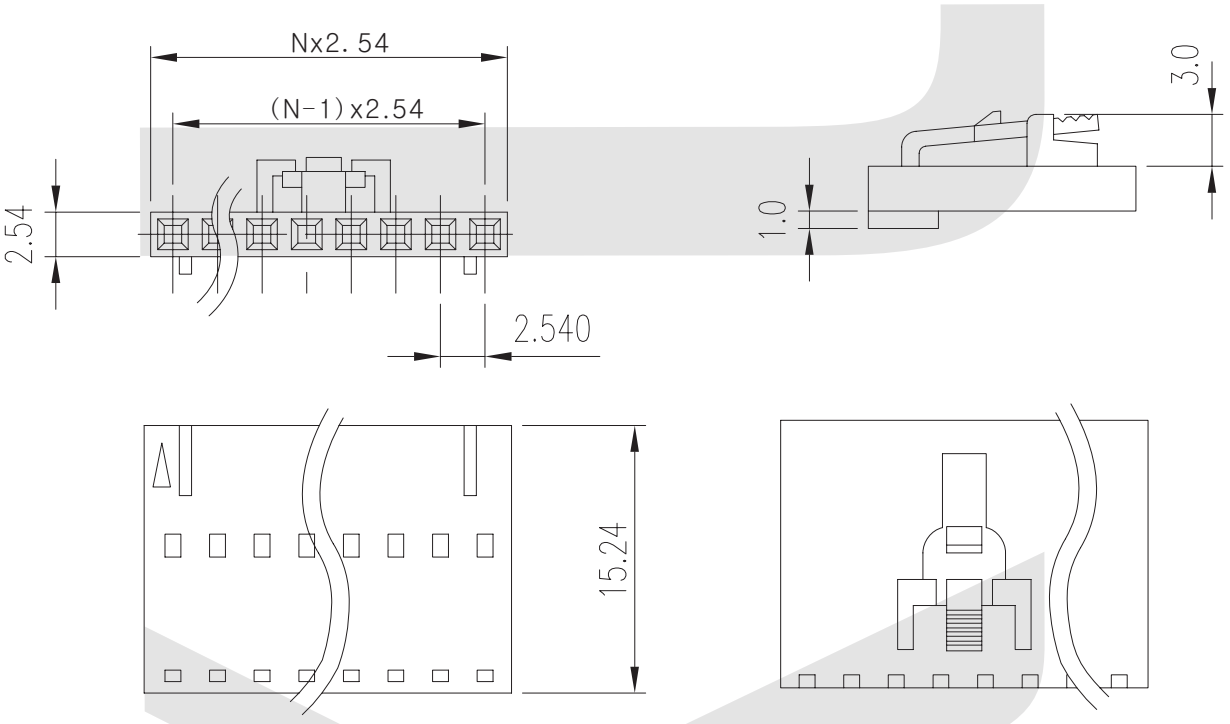

ORDER INFORMATION

Product NO.: KLS1-XL2-2.54-XX-H

Series No.
Pitch 2.54=2.54mm
Type: H=Housing
S=Straight Male pin
T=Terminal
R=Right Male pin
PIN Number: 2 ~12pin

PCB Connector Series

KLS1-XL2-2.54mm Pitch=2.54mm TYPE

Electrical Specification:

Rated Voltage: 250V AV.DC
Rated Current: 3A
Contact Resistance: 0.02Ω max
Insulation Resistance: 1000MΩ min
Withstand voltage: 1000V AC/min
Temperature range for usage : -40°C~+105°C
P.C board thickness : 0.8~1.6mm



Material:

Contacts: Phosphor Bronze
Plating: Tin 50u" over 100u" nickel
Wire range : AWG#30~#22

Terminal

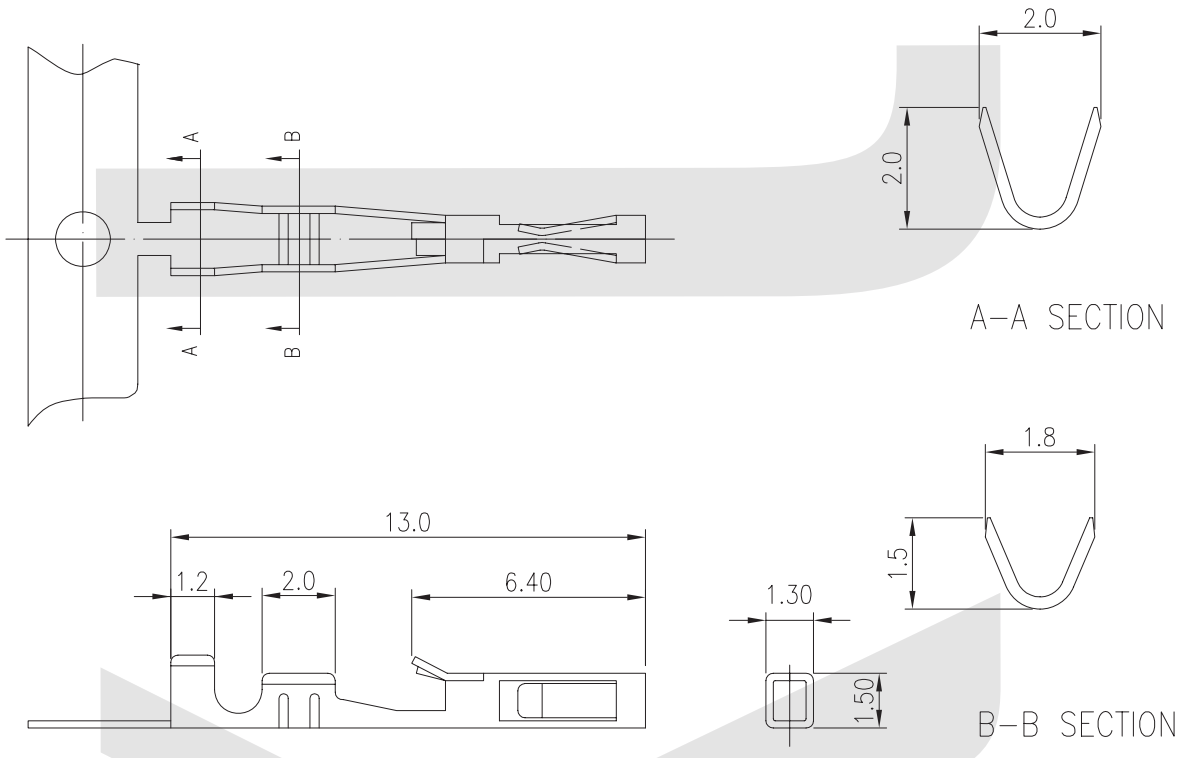

ORDER INFORMATION

Product NO.: KLS1-XL2-2.54-T

Series No.
Pitch 2.54=2.54mm

Type: H=Housing T=Terminal
S=Straight Male pin R=Right Male pin

PCB Connector Series

KLS1-XL2-2.54mm Pitch=2.54mm TYPE

Electrical Specification:

Rated Voltage: 250V AV.DC
Rated Current: 3A
Contact Resistance: 0.02Ω max
Insulation Resistance: 1000MΩ min
Withstand voltage: 1000V AC/min
Temperature range for usage : -40°C~+105°C
P.C board thickness : 0.8~1.6mm



Material:

Housing: PA66 (PA66) UL94V-0
Contacts: Brass
Plating: Tin 50u" over 100u" nickel

Straight Male pin

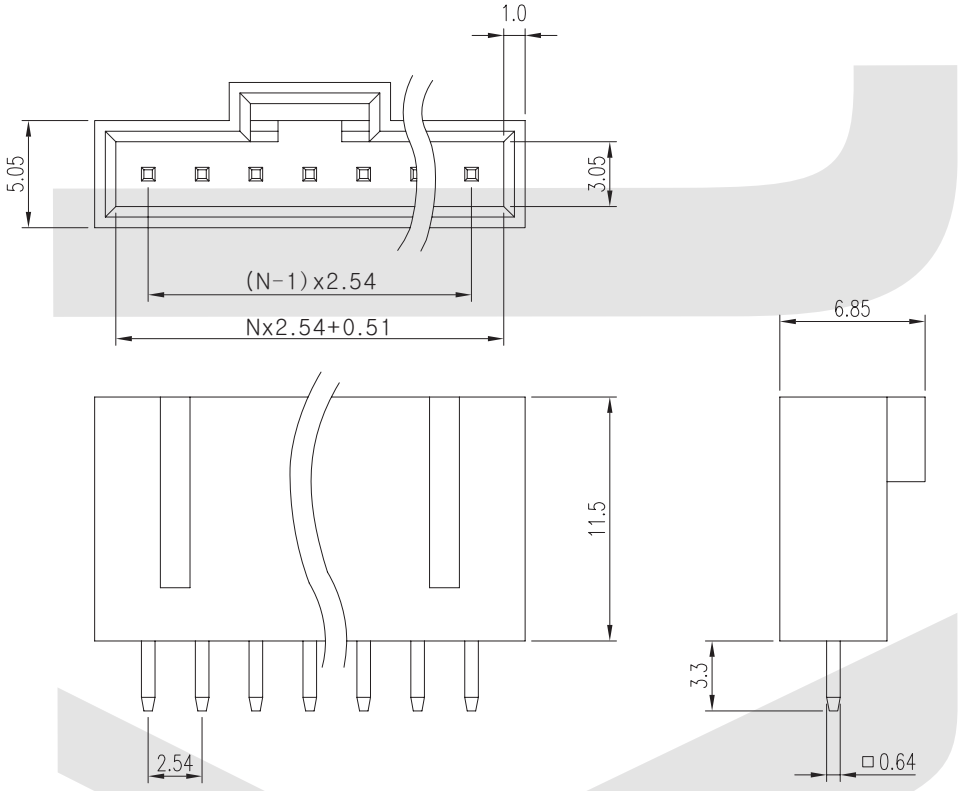

ORDER INFORMATION

Product NO.: KLS1-XL2-2.54-XX-S

Series No.
Pitch 2.54=2.54mm
Type: H=Housing
S=Straight Male pin
T=Terminal
R=Right Male pin
PIN Number: 2 ~12pin

PCB Connector Series

KLS1-XL2-2.54mm Pitch=2.54mm TYPE



Electrical Specification:

Rated Voltage: 250V AV.DC
Rated Current: 3A
Contact Resistance: 0.02Ω max
Insulation Resistance: 1000MΩ min
Withstand voltage: 1000V AC/min
Temperature range for usage : -40°C~+105°C
P.C board thickness : 0.8~1.6mm

Material:

Housing: PA66 (PA66) UL94V-0
Contacts: Brass
Plating: Tin 50u" over 100u" nickel
Wire range : AWG#30~#22

Right Male pin

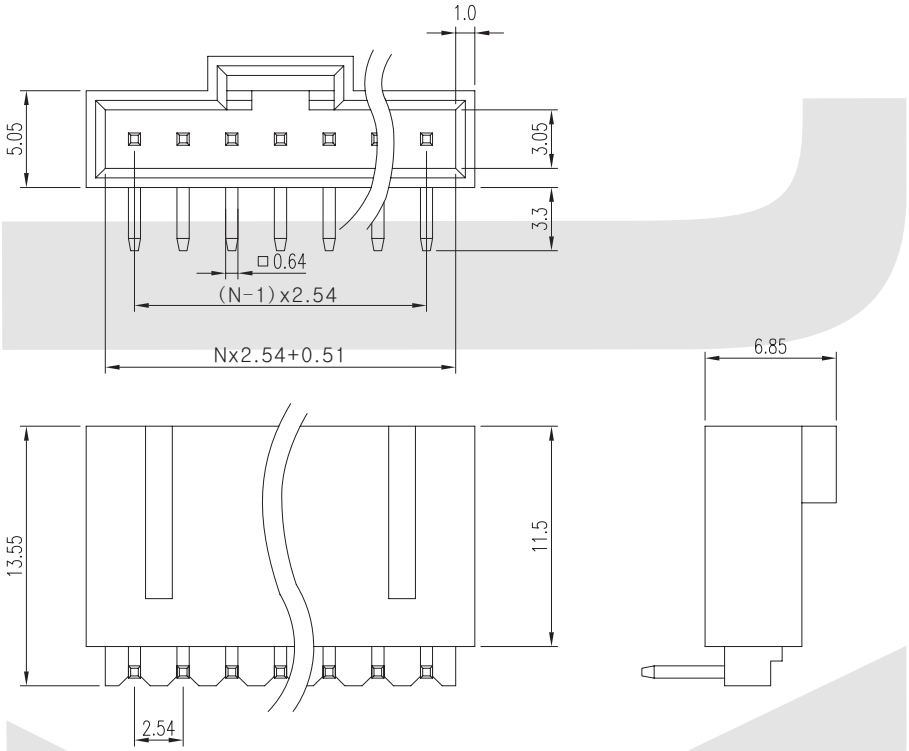

ORDER INFORMATION

Product NO.: KLS1-XL2-2.54-XX-R

Series No.
Pitch 2.54=2.54mm
Type: H=Housing
S=Straight Male pin
T=Terminal
R=Right Male pin
PIN Number: 2 ~12pin

I

PCB Connector Series

KLS1-XL2-2.54mm Pitch=2.54mm TYPE

Electrical Specification:

Rated Voltage: 250V AV.DC
Rated Current: 3A
Contact Resistance: 0.02Ω max
Insulation Resistance: 1000MΩ min
Withstand voltage: 1000V AC/min
Temperature range for usage : -40°C~+105°C
P.C board thickness : 0.8~1.6mm

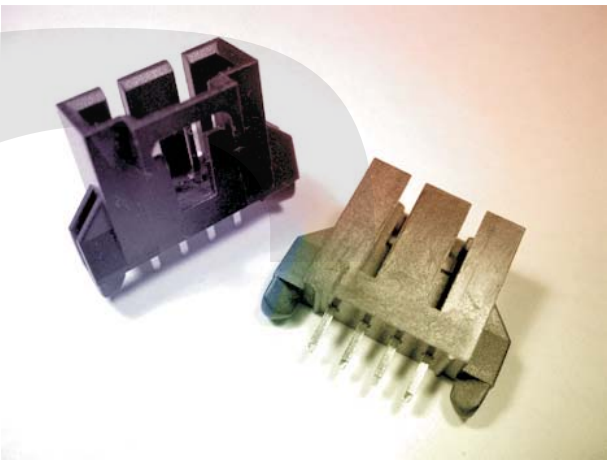

Material:

Housing: PA66 (PA66) UL94V-0
Contacts: Brass
Plating: Tin 50u" over 100u" nickel
Wire range : AWG#30~#22

Straight Male pin With Post.

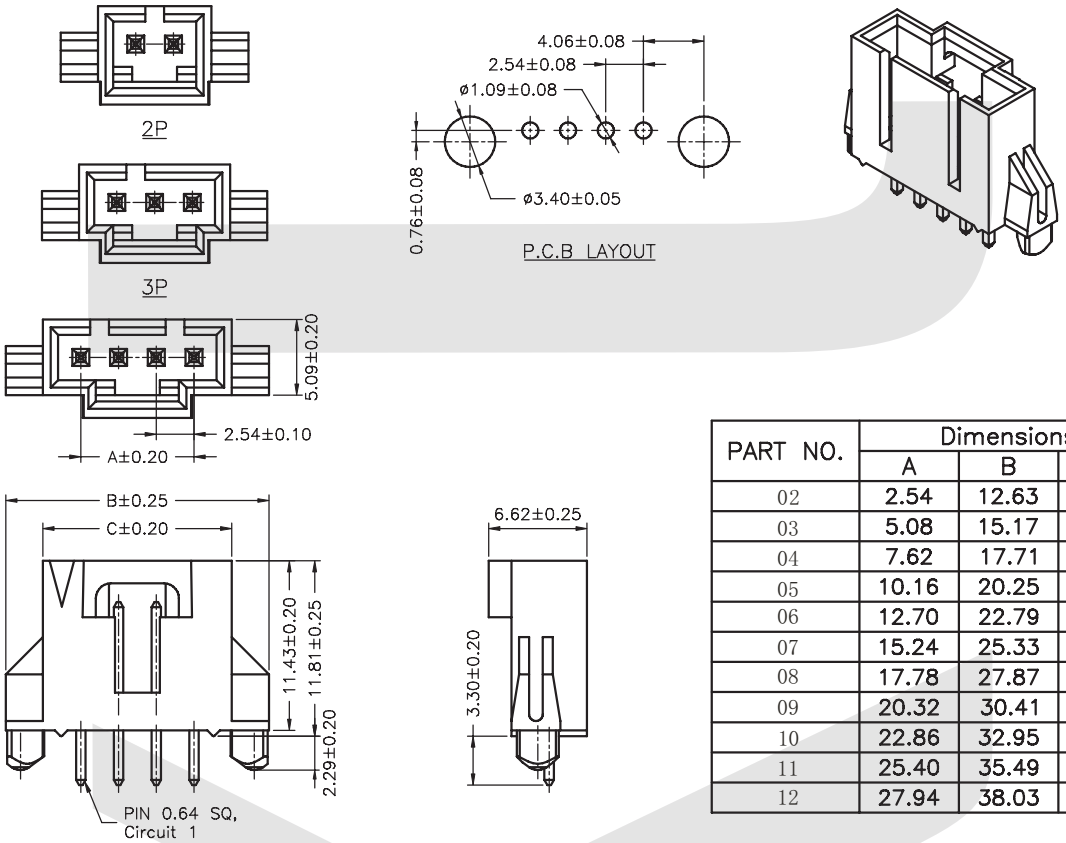

PART NO.	Dimensions		
	A	B	C
02	2.54	12.63	7.63
03	5.08	15.17	10.17
04	7.62	17.71	12.71
05	10.16	20.25	15.25
06	12.70	22.79	17.79
07	15.24	25.33	20.33
08	17.78	27.87	22.87
09	20.32	30.41	25.41
10	22.86	32.95	27.95
11	25.40	35.49	30.49
12	27.94	38.03	33.03

ORDER INFORMATION

Product NO.: KLS1-XL2-2.54-XX-SW

Series No.
Pitch 2.54=2.54mm
PIN Number: 2 ~12pin
SW=Straight Male pin With Post.

PCB Connector Series

KLS1-MT-2.54 Pitch=2.54mm TYPE

Electrical Specification:

Rated Voltage: 250V AC.DC
Rated Current: 3A
Contact Resistance: 20mΩ max
Insulation Resistance: 1000MΩ min
Withstand voltage: 1500V AC/MIN
Temperature range for usage : -40°C~+105°C

Material:

Housing: PA66 UL94V-2
Contacts: Phosphor bronze
Plating: Tin 50u" over 100u" nickel

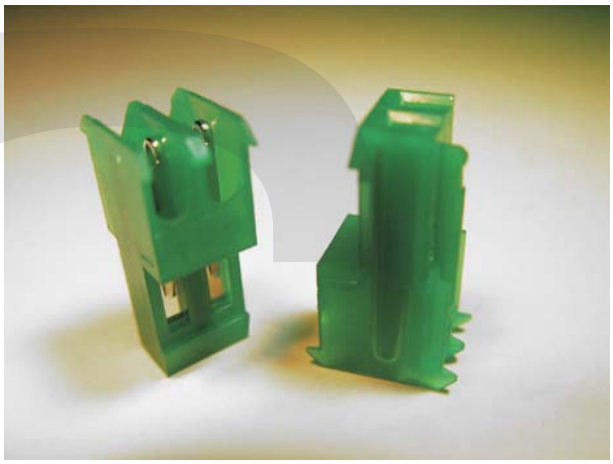

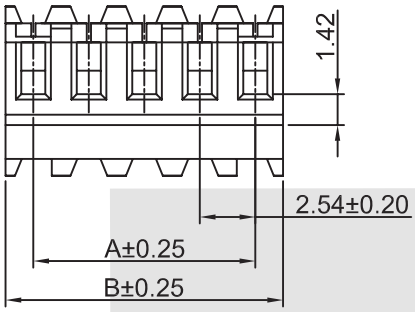

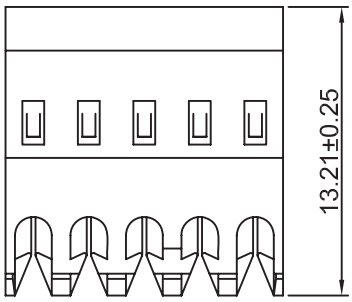

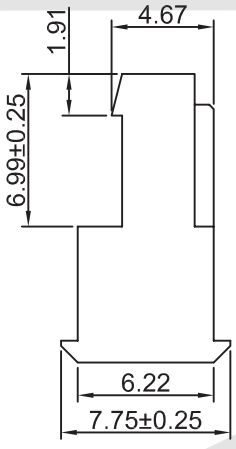

PART NO.	Dimensions	
	A	B
02	2.54	5.08
03	5.08	7.62
04	7.62	10.16
05	10.16	12.70
06	12.70	15.24
07	15.24	17.78
08	17.78	20.32
09	20.32	22.86
10	22.86	25.40
11	25.40	27.94
12	27.94	30.48
13	30.48	33.02
14	33.02	35.56
15	35.56	38.10
16	38.10	40.64
17	40.64	43.18
18	43.18	45.72
19	45.72	48.26
20	48.26	50.80
21	50.80	53.34
22	53.34	55.88
23	55.88	58.42
24	58.42	60.96

ORDER INFORMATION

Product NO.: KLS1-MT-2.54-XX-R

Series No.
Pitch: 2.54=2.54mm
PIN Number: 2 ~ 24Pin
O -Orange=18 AWG
Y -Yellow=20 AWG
BL-Blue=26 AWG
R -Red=22 AWG
W -White=24 AWG
BK-Black=18 ~ 26 AWG

PCB Connector Series

KLS1-MA-2.54 Pitch=2.54mm TYPE

Electrical Specification:

Rated Voltage: 250V AC.DC
Rated Current: 3A
Contact Resistance: 20mΩ max
Insulation Resistance: 1000MΩ min
Withstand voltage: 1500V AC/MIN
Temperature range for usage : -40°C~+105°C

Material:

Housing: PA66 UL94V-2
Contacts: Phosphor bronze
Plating: Tin 50u" over 100u" nickel

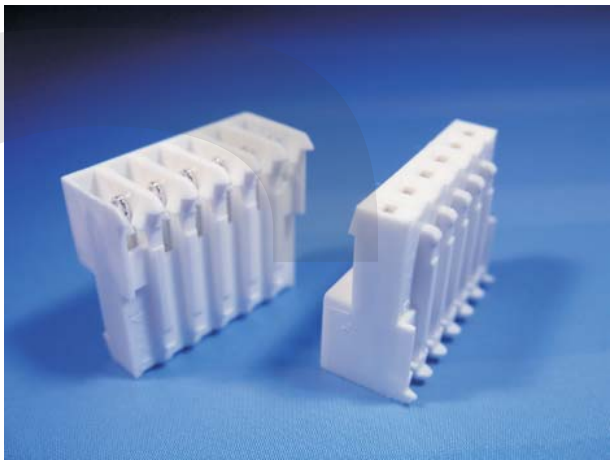

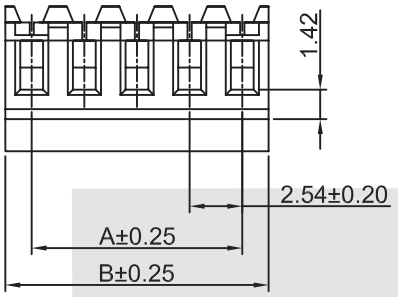

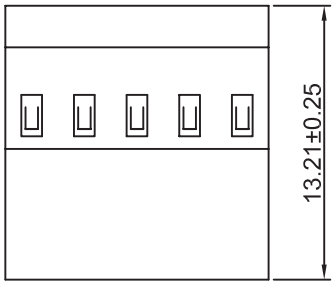

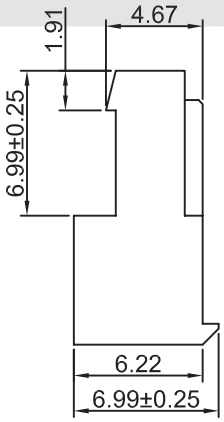

PART NO.	Dimensions	
	A	B
02	2.54	5.08
03	5.08	7.62
04	7.62	10.16
05	10.16	12.70
06	12.70	15.24
07	15.24	17.78
08	17.78	20.32
09	20.32	22.86
10	22.86	25.40
11	25.40	27.94
12	27.94	30.48
13	30.48	33.02
14	33.02	35.56
15	35.56	38.10
16	38.10	40.64
17	40.64	43.18
18	43.18	45.72
19	45.72	48.26
20	48.26	50.80
21	50.80	53.34
22	53.34	55.88
23	55.88	58.42
24	58.42	60.96

ORDER INFORMATION

Product NO.: KLS1-MA-2.54-XX-R

Series No.
Pitch: 2.54=2.54mm
PIN Number: 2 ~ 24Pin
O -Orange=18 AWG
Y -Yellow=20 AWG
BL-Blue=26 AWG
R -Red=22 AWG
W -White=24 AWG
BK-Black=18 ~ 26 AWG

PCB Connector Series

KLS1-MR-2.54 Pitch=2.54mm TYPE

Electrical Specification:

Rated Voltage: 250V AC.DC
Rated Current: 3A
Contact Resistance: 20mΩ max
Insulation Resistance: 1000MΩ min
Withstand voltage: 1500V AC/MIN
Temperature range for usage : -40°C~+105°C

Material:

Housing: PA66 UL94V-2
Contacts: Phosphor bronze
Plating: Tin 50u" over 100u" nickel

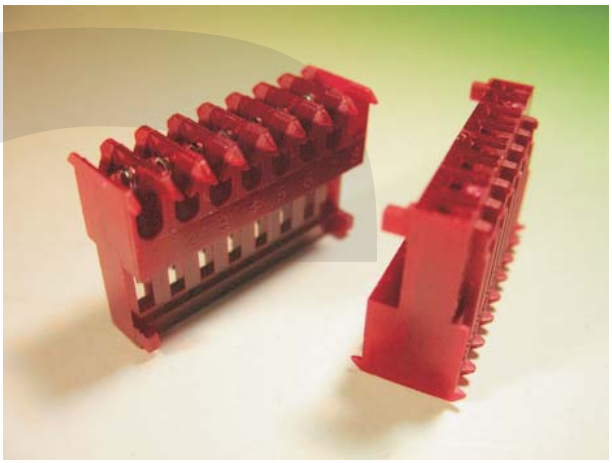

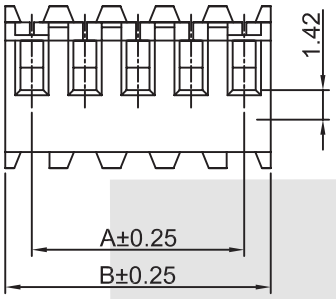

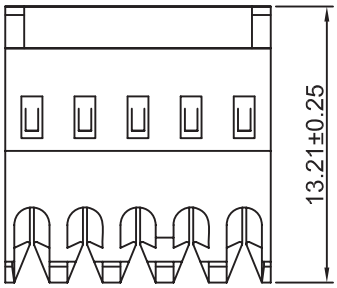

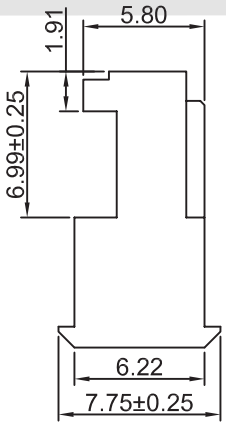

PART NO.	Dimensions	
	A	B
02	2.54	5.08
03	5.08	7.62
04	7.62	10.16
05	10.16	12.70
06	12.70	15.24
07	15.24	17.78
08	17.78	20.32
09	20.32	22.86
10	22.86	25.40
11	25.40	27.94
12	27.94	30.48
13	30.48	33.02
14	33.02	35.56
15	35.56	38.10
16	38.10	40.64
17	40.64	43.18
18	43.18	45.72
19	45.72	48.26
20	48.26	50.80
21	50.80	53.34
22	53.34	55.88
23	55.88	58.42
24	58.42	60.96

ORDER INFORMATION

Product NO.: KLS1-MR-2.54-XX-R

Series No.
Pitch: 2.54=2.54mm
PIN Number: 2 ~ 24Pin
O -Orange=18 AWG
Y -Yellow=20 AWG
BL-Blue=26 AWG
R -Red=22 AWG
W -White=24 AWG
BK-Black=18 ~ 26 AWG

PCB Connector Series

KLS1-MB-2.54 Pitch=2.54mm TYPE

Electrical Specification:

Rated Voltage: 250V AC.DC
Rated Current: 3A
Contact Resistance: 20mΩ max
Insulation Resistance: 1000MΩ min
Withstand voltage: 1500V AC/MIN
Temperature range for usage : -40°C~+105°C

Material:

Housing: PA66 UL94V-2
Contacts: Phosphor bronze
Plating: Tin 50u" over 100u" nickel

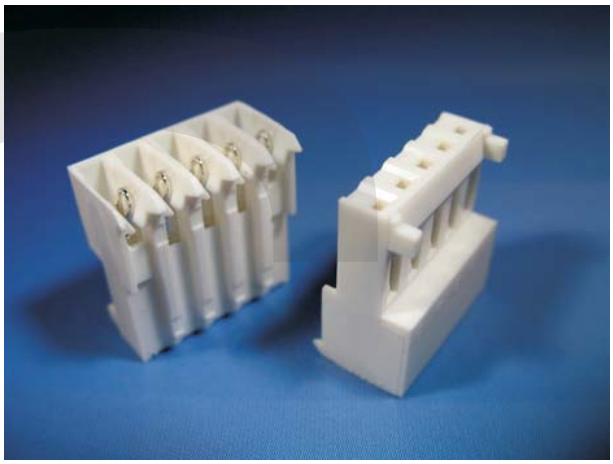

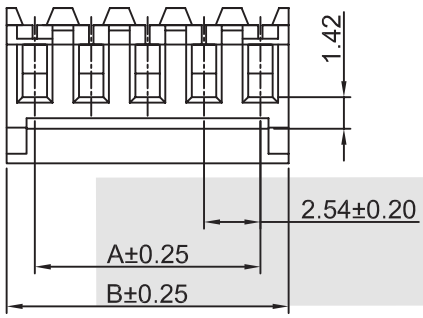

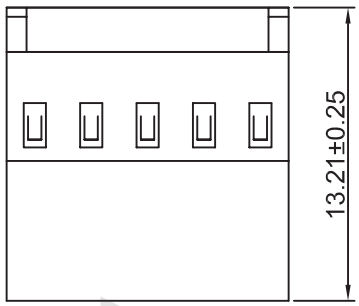

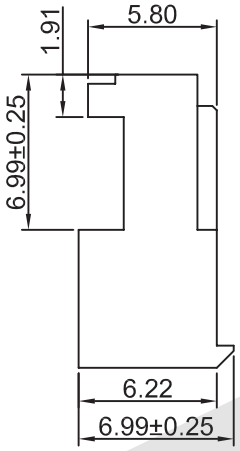

PART NO.	Dimensions	
	A	B
02	2.54	5.08
03	5.08	7.62
04	7.62	10.16
05	10.16	12.70
06	12.70	15.24
07	15.24	17.78
08	17.78	20.32
09	20.32	22.86
10	22.86	25.40
11	25.40	27.94
12	27.94	30.48
13	30.48	33.02
14	33.02	35.56
15	35.56	38.10
16	38.10	40.64
17	40.64	43.18
18	43.18	45.72
19	45.72	48.26
20	48.26	50.80
21	50.80	53.34
22	53.34	55.88
23	55.88	58.42
24	58.42	60.96

ORDER INFORMATION

Product NO.: KLS1-MB-2.54-XX-R

Series No.
Pitch: 2.54=2.54mm
PIN Number: 2 ~ 24Pin
O -Orange=18 AWG
Y -Yellow=20 AWG
BL-Blue=26 AWG
R -Red=22 AWG
W -White=24 AWG
BK-Black=18 ~ 26 AWG

PCB Connector Series

KLS1-3.68 Pitch=3.68mm TYPE

Electrical Specification:

Voltage rating: 300V. AC / DC
Current rating: 12A
Contact resistance: 0.01Ω max
Insulator resistance: 1000MΩ min
Withstand voltage: 1500V AC / MIN
Temperature range for usage : -40°C~+105°C



Material:

Contacts: Phosphor Bronze
Plating: Tin 50u" over 100u" nickel
Wire range : AWG#24~#20

Male Terminal

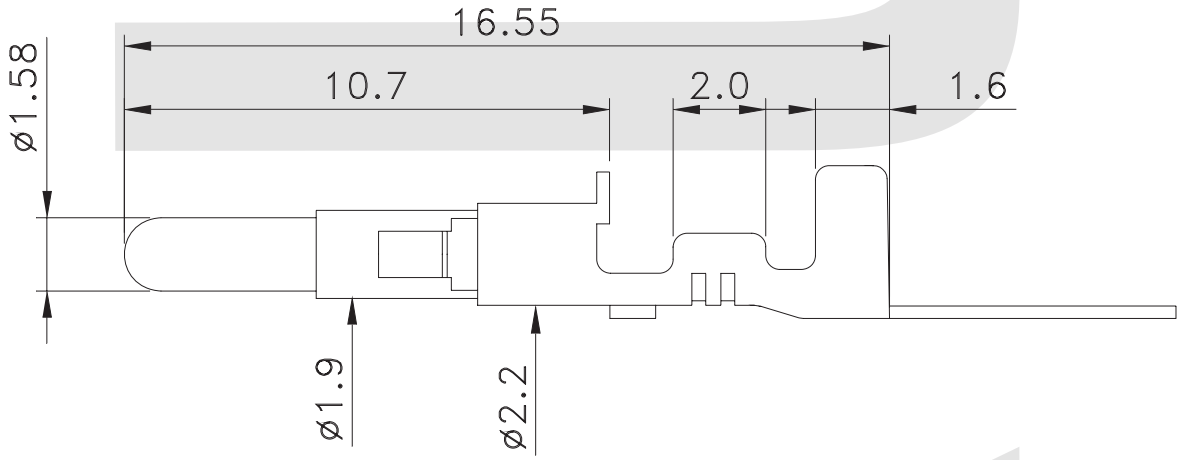

ORDER INFORMATION

Product NO.: KLS1-3.68-MT

Pitch: 3.68=3.68mm

Type: FH=Female Housing MT=Male Termina
MH=Male Housing FT=Female Terminall

PCB Connector Series

KLS1-3.68 Pitch=3.68mm TYPE

Electrical Specification:

Voltage rating: 300V. AC / DC
Current rating: 12A
Contact resistance: 0.01Ω max
Insulator resistance: 1000MΩ min
Withstand voltage: 1500V AC / MIN
Temperature range for usage : -40°C~+105°C



Material:

Contacts: Phosphor Bronze
Plating: Tin 50u" over 100u" nickel
Wire range : AWG#24~#20

Female Terminal

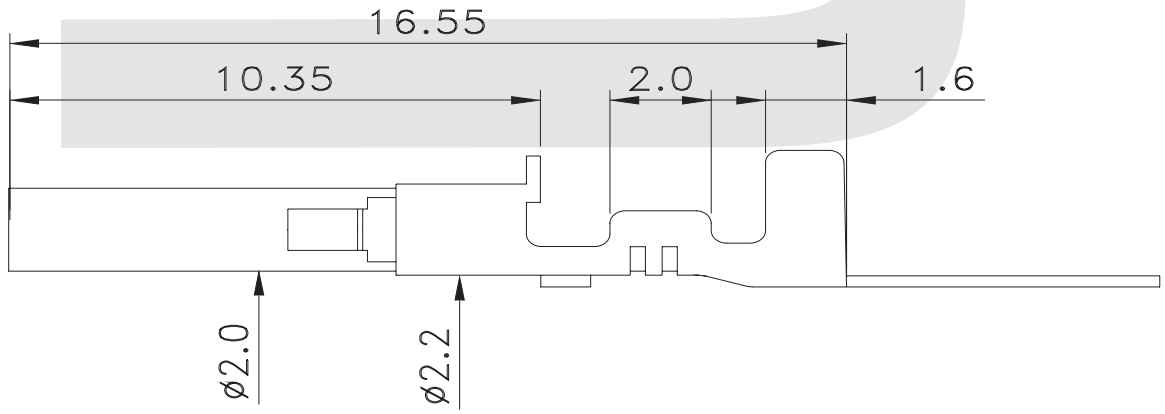

ORDER INFORMATION

Product NO.: KLS1-3.68-FT

Pitch: 3.68=3.68mm

Type: FH=Female Housing MT=Male Termina
MH=Male Housing FT=Female Terminall

PCB Connector Series

KLS1-3.68 Pitch=3.68mm TYPE

Electrical Specification:

Voltage rating: 300V. AC / DC
Current rating: 12A
Contact resistance: 0.01Ω max
Insulator resistance: 1000MΩ min
Withstand voltage: 1500V AC / MIN
Temperature range for usage : -40°C~+105°C

Material:

Housing: PA66 (PA66) UL94V-2
Wire range : AWG#24~#20



Male Housing

Female Housing

1X2

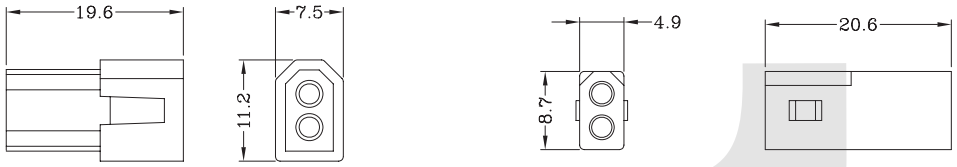

1X3

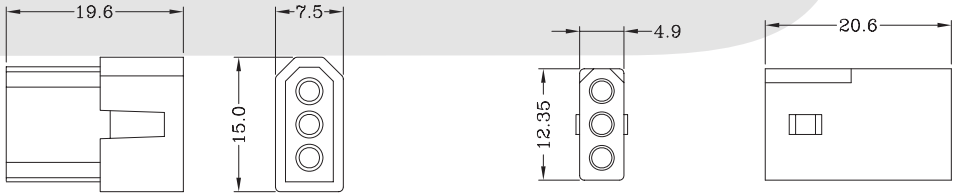

1X4

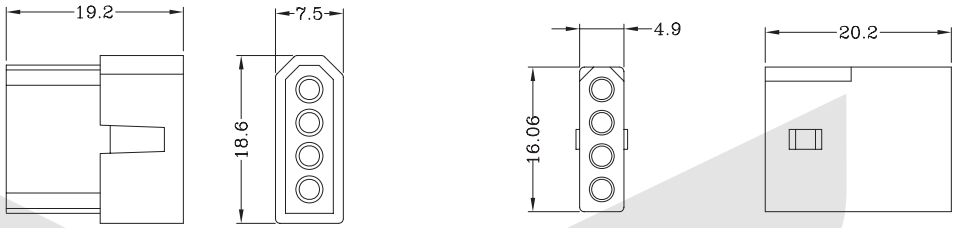

ORDER INFORMATION

Product NO.: KLS1-3.68-1X2-FH

Type: FH=Female Housing MT=Male Termina
MH=Male Housing FT=Female Terminall

Pitch: 3.68=3.68mm

No. of Pins: 1-Single layer 2-Double layer
3-Sthree Double layer
Poles:1X2 1X3 1X4 2X2 2X3 3X3 3X4 3X5

PCB Connector Series

KLS1-3.68 Pitch=3.68mm TYPE

Male Housing | Female Housing

1X5

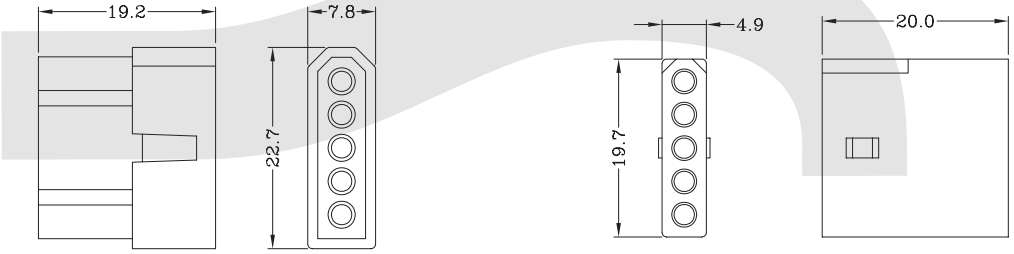

2X2

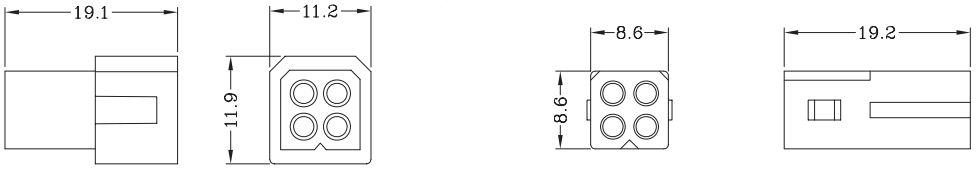

2X3

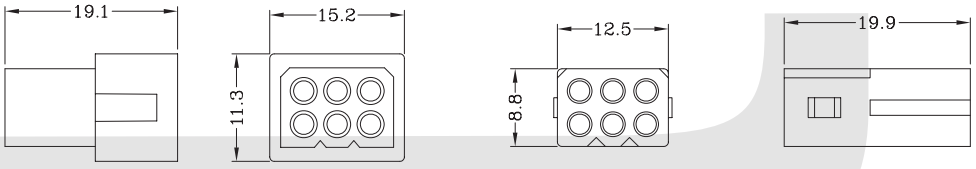

3X3

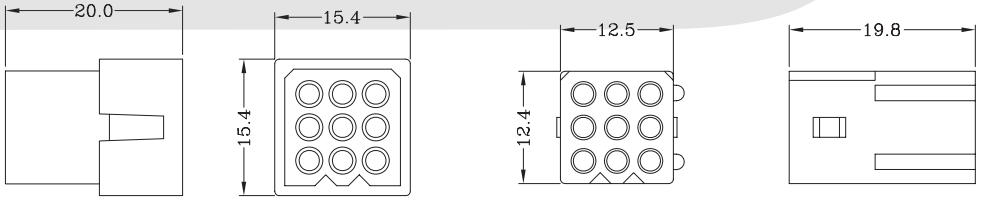

3X4

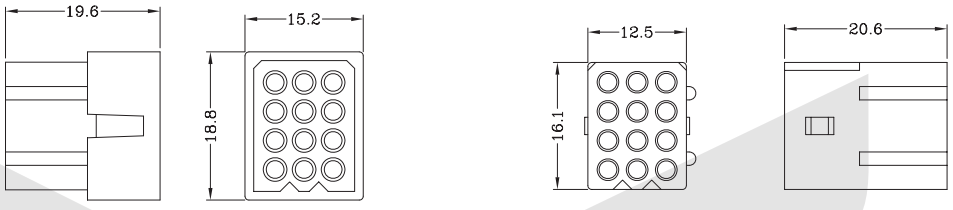

3X5

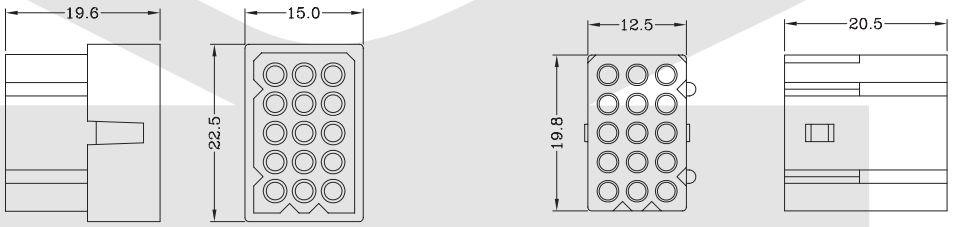

PCB Connector Series

KLS1-396 Pitch=3.96mm TYPE



Electrical Specification:

Rated Voltage: 50/250V AC.DC
Rated Current: 5A
Contact Resistance: 0.02 Ohm max
Insulation Resistance: 1000M Ohm min
Withstand voltage: 1500V AC/MIN
Temperature range for usage : -25°C~+85°C
P.C board thickness : 1.6mm

Material:

Housing: PA66 (PA66) UL94V-2
Contacts: Brass or Phosphor Bronze
Plating: Tin 50u" over 100u" nickel
Wire range : AWG#24#18

Housing

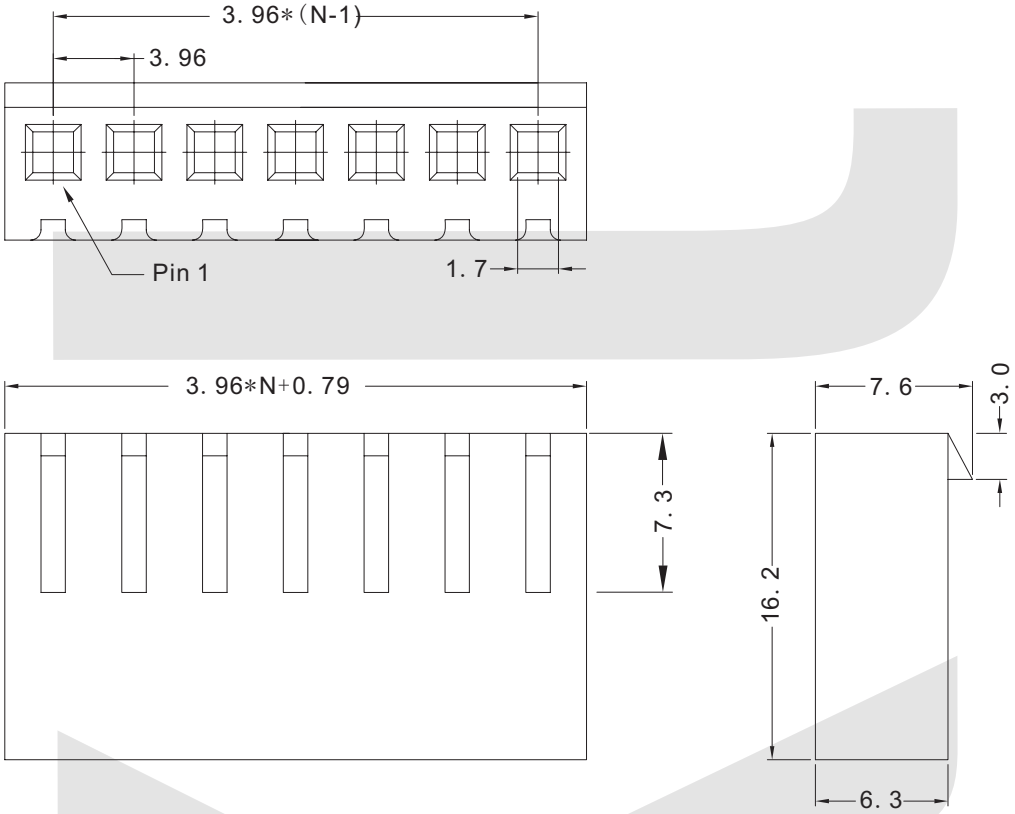

ORDER INFORMATION

Product NO.: KLS1-3.96-XX-H

Pitch: 3.96=3.96mm
PIN Number: 02 ~ 16Pin
Type: H=Housing S=Straight Male pin T=Terminal R=Right Male pin

PCB Connector Series

KLS1-396 Pitch=3.96mm TYPE



Electrical Specification:

Rated Voltage: 50/250V AC.DC
Rated Current: 5A
Contact Resistance: 0.02 Ohm max
Insulation Resistance: 1000M Ohm min
Withstand voltage: 1500V AC/MIN
Temperature range for usage : -25°C~+85°C
P.C board thickness : 1.6mm

Material:

Housing: PA66 (PA66) UL94V-2
Contacts: Brass or Phosphor Bronze
Plating: Tin 50u" over 100u" nickel
Wire range : AWG#24#18

Terminal

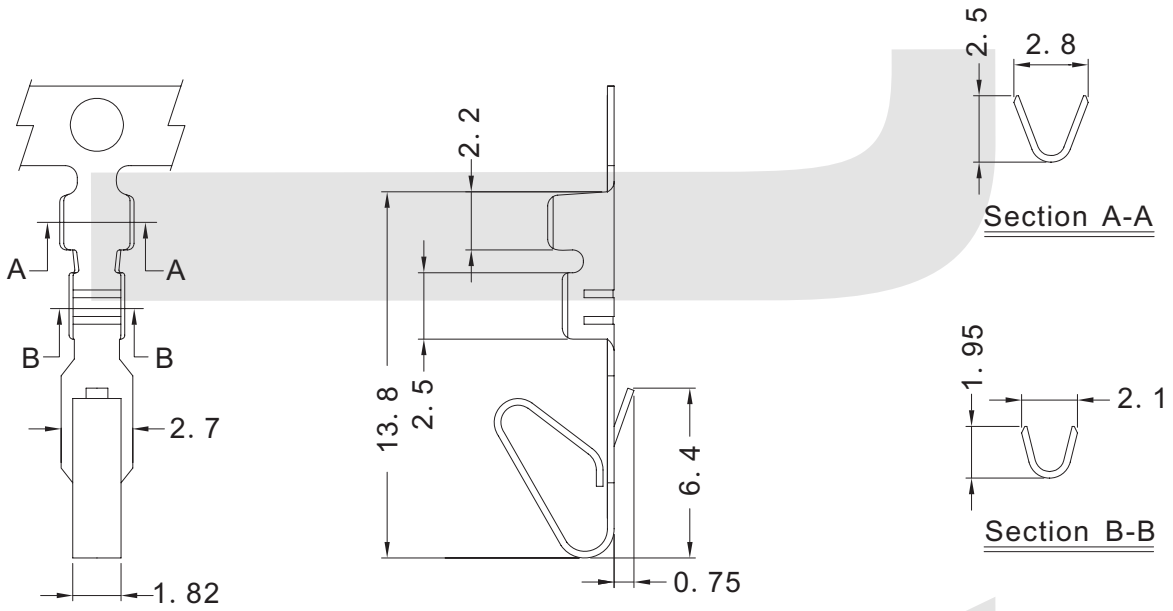

ORDER INFORMATION

Product NO.: KLS1-3.96-T

Pitch: 3.96=3.96mm

Type: H=Housing T=Terminal
S=Straight Male pin R=Right Male pin

PCB Connector Series

KLS1-396 Pitch=3.96mm TYPE



Electrical Specification:

Rated Voltage: 50/250V AC.DC
Rated Current: 5A
Contact Resistance: 0.02 Ohm max
Insulation Resistance: 1000M Ohm min
Withstand voltage: 1500V AC/MIN
Temperature range for usage : -25ºC~+85ºC
P.C board thickness : 1.6mm

Material:

Housing: PA66 (PA66) UL94V-2
Contacts: Brass or Phosphor Bronze
Plating: Tin 50u" over 100u" nickel
Wire range : AWG#24#18

Straight

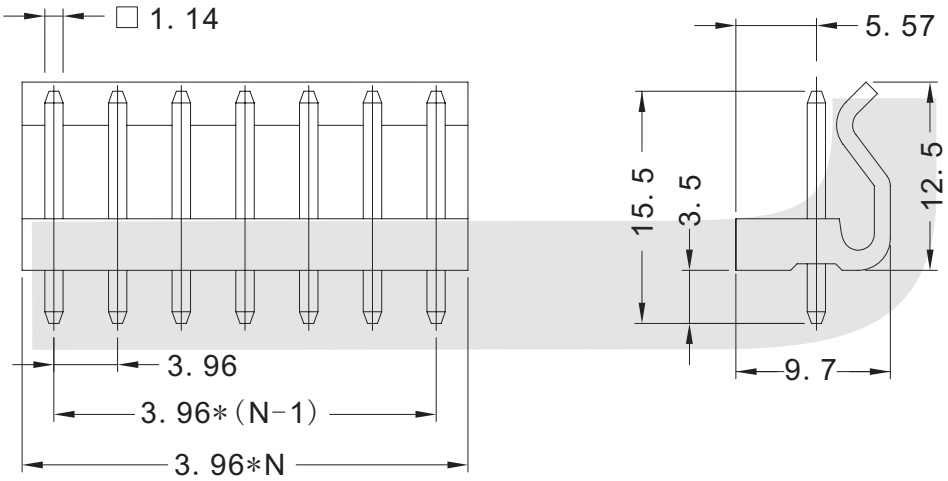

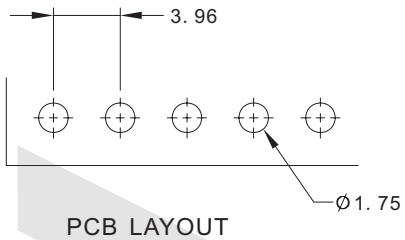

PCB LAYOUT

ORDER INFORMATION

Product NO.: KLS1-3.96-XX-H

Pitch: 3.96=3.96mm
PIN Number: 02 ~ 16Pin
Type: H=Housing
S=Straight Male pin
T=Terminal
R=Right Male pin

PCB Connector Series

KLS1-396 Pitch=3.96mm TYPE



Electrical Specification:

Rated Voltage: 50/250V AC.DC
Rated Current: 5A
Contact Resistance: 0.02 Ohm max
Insulation Resistance: 1000M Ohm min
Withstand voltage: 1500V AC/MIN
Temperature range for usage : -25°C~+85°C
P.C board thickness : 1.6mm

Material:

Housing: PA66 (PA66) UL94V-2
Contacts: Brass or Phosphor Bronze
Plating: Tin 50u" over 100u" nickel
Wire range : AWG#24#18

Right angle

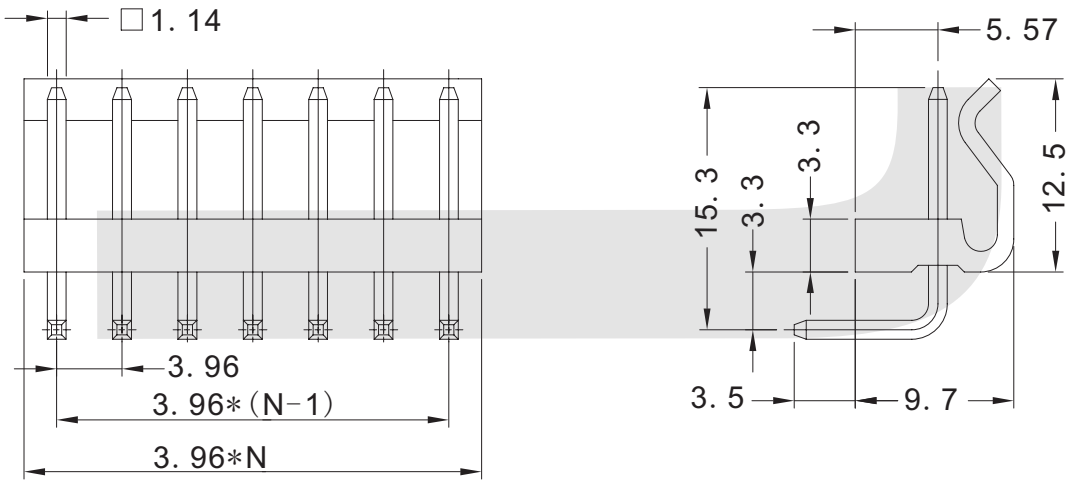

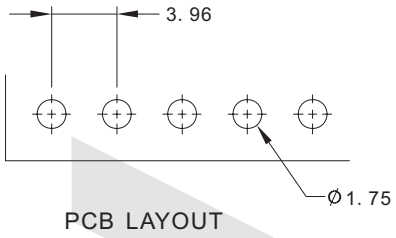

PCB LAYOUT

ORDER INFORMATION

Product NO.: KLS1-3.96-XX-H

Pitch: 3.96=3.96mm
PIN Number: 02 ~ 16Pin
Type: H=Housing
S=Straight Male pin
T=Terminal
R=Right Male pin

PCB Connector Series

KLS1-3.96A Pitch=3.96mm TYPE



Electrical Specification:

Rated Voltage: 50/250V AC.DC
Rated Current: 7A
Contact Resistance: 0.02 Ohm max
Insulation Resistance: 1000M Ohm min
Withstand voltage: 1500V AC/MIN
Temperature range for usage : -25°C~+85°C
P.C board thickness : 1.6mm

Material:

Housing: PA66 (PA66) UL94V-2
Contacts: Brass or Phosphor Bronze
Plating: Tin 50u" over 100u" nickel
Wire range : AWG#24#18

Housing

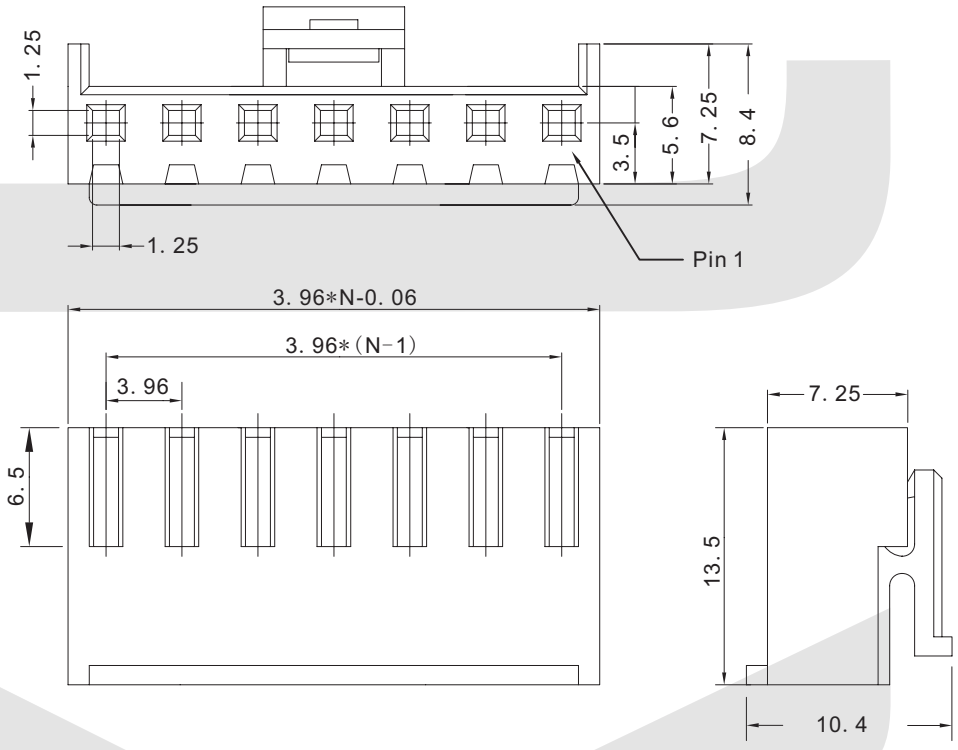

ORDER INFORMATION

Product NO.: KLS1-3.96A-XX-H

Type: H=Housing T=Terminal
S=Straight Male pin R=Right Male pin

Pitch: 396A=3.96mm

PIN Number: 02 ~ 13Pin

PCB Connector Series

KLS1-3.96A Pitch=3.96mm TYPE



Electrical Specification:

Rated Voltage: 50/250V AC.DC
Rated Current: 7A
Contact Resistance: 0.02 Ohm max
Insulation Resistance: 1000M Ohm min
Withstand voltage: 1500V AC/MIN
Temperature range for usage : -25°C~+85°C
P.C board thickness : 1.6mm

Material:

Housing: PA66 (PA66) UL94V-2
Contacts: Brass or Phosphor Bronze
Plating: Tin 50u" over 100u" nickel
Wire range : AWG#24#18

Terminal

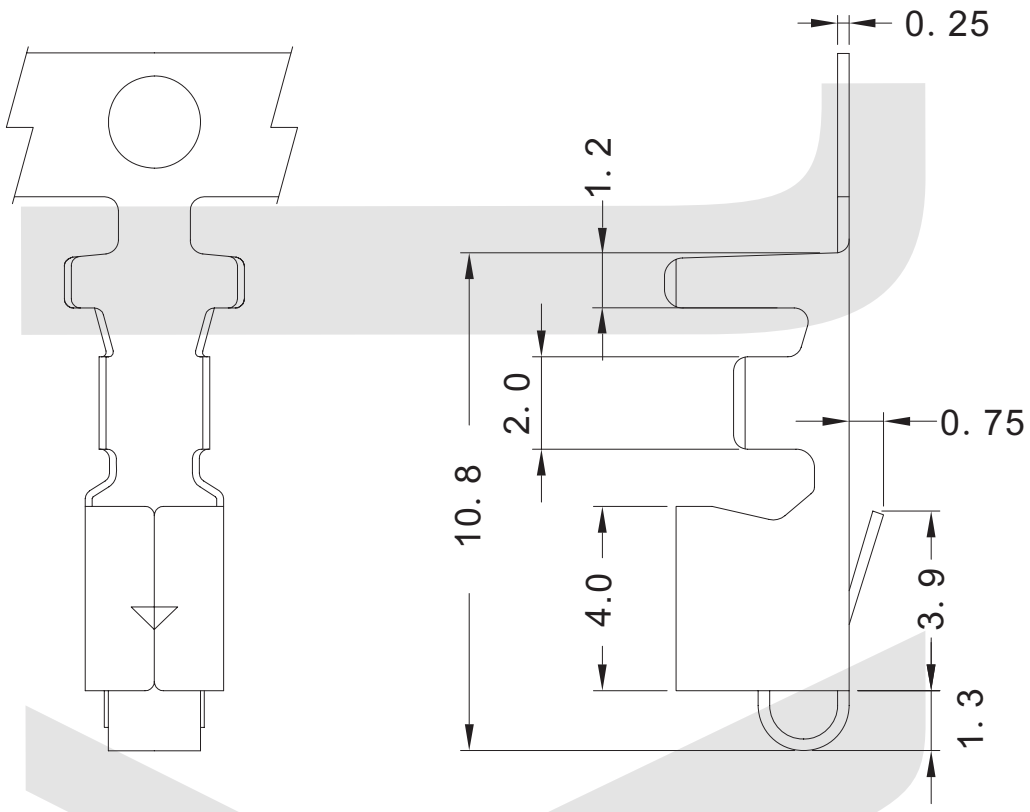

ORDER INFORMATION

Product NO.: KLS1-3.96A-T

Type: H=Housing T=Terminal
S=Straight Male pin R=Right Male pin

Pitch: 396A=3.96mm

PCB Connector Series

KLS1-3.96A Pitch=3.96mm TYPE



Electrical Specification:

Rated Voltage: 50/250V AC.DC
Rated Current: 7A
Contact Resistance: 0.02 Ohm max
Insulation Resistance: 1000M Ohm min
Withstand voltage: 1500V AC/MIN
Temperature range for usage : -25ºC~+85ºC
P.C board thickness : 1.6mm

Material:

Housing: PA66 (PA66) UL94V-2
Contacts: Brass or Phosphor Bronze
Plating: Tin 50u" over 100u" nickel
Wire range : AWG#24#18

Straight

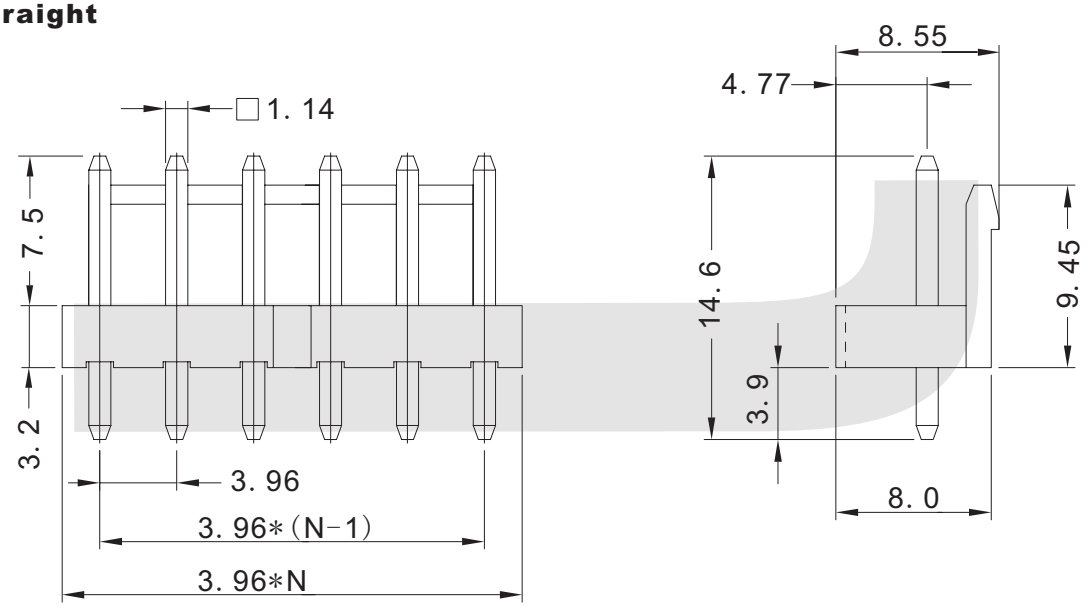

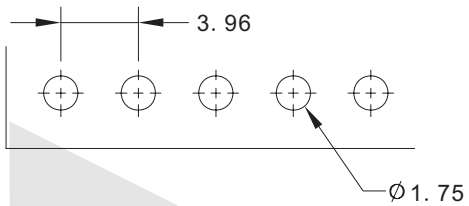

PCB LAYOUT

ORDER INFORMATION

Product NO.: KLS1-3.96A-XX-S

Type: H=Housing T=Terminal
S=Straight Male pin R=Right Male pin

Pitch: 396A=3.96mm

PIN Number: 02 ~ 13Pin

PCB Connector Series

KLS1-3.96A Pitch=3.96mm TYPE



Electrical Specification:

Rated Voltage: 50/250V AC.DC
Rated Current: 7A
Contact Resistance: 0.02 Ohm max
Insulation Resistance: 1000M Ohm min
Withstand voltage: 1500V AC/MIN
Temperature range for usage : -25ºC~+85ºC
P.C board thickness : 1.6mm

Material:

Housing: PA66 (PA66) UL94V-2
Contacts: Brass or Phosphor Bronze
Plating: Tin 50u" over 100u" nickel
Wire range : AWG#24#18

Right angle

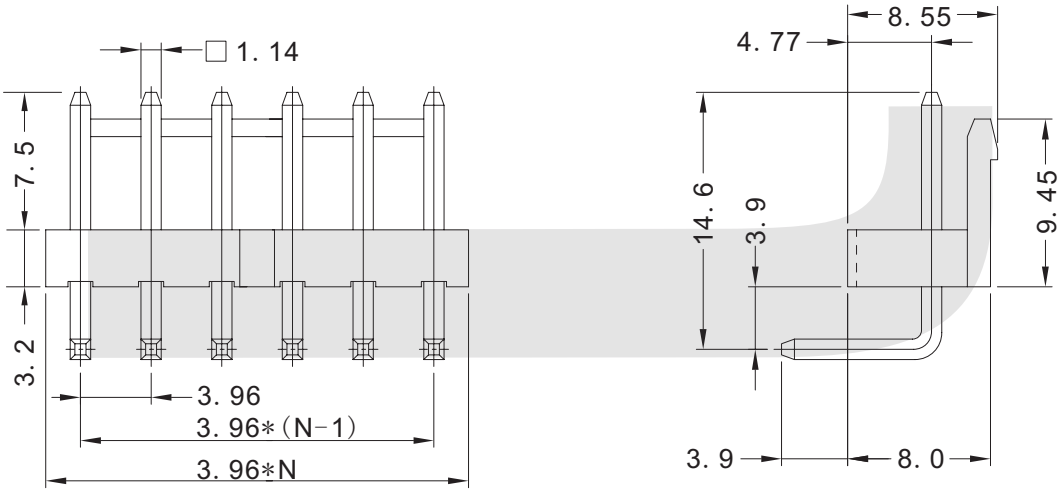

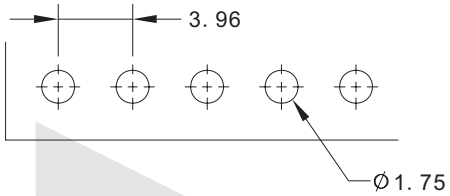

PCB LAYOUT

ORDER INFORMATION

Product NO.: KLS1-3.96A-XX-R

Type: H=Housing T=Terminal
S=Straight Male pin R=Right Male pin

Pitch: 396A=3.96mm

PIN Number: 02 ~ 13Pin

PCB Connector Series

KLS1-MT-3.96 Pitch=3.96mm TYPE

Electrical Specification:

Rated Voltage: 250V AC.DC
Rated Current: 7A
Contact Resistance: 10mΩ max
Insulation Resistance: 1000MΩ min
Withstand voltage: 1500V AC/MIN
Temperature range for usage : -40°C~+105°C

Material:

Housing: PA66 UL94V-2
Contacts: Phosphor bronze
Plating: Tin 50u" over 100u" nickel

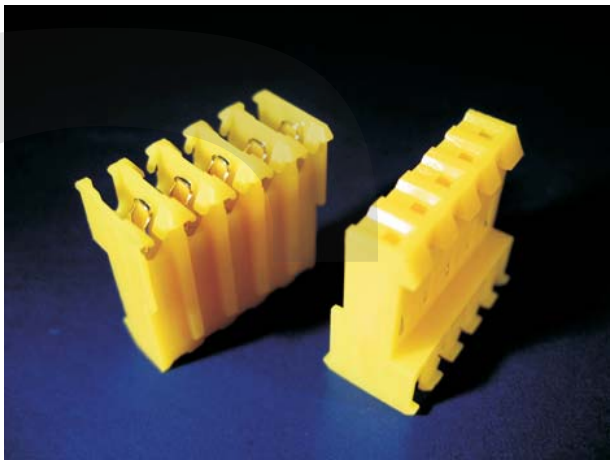

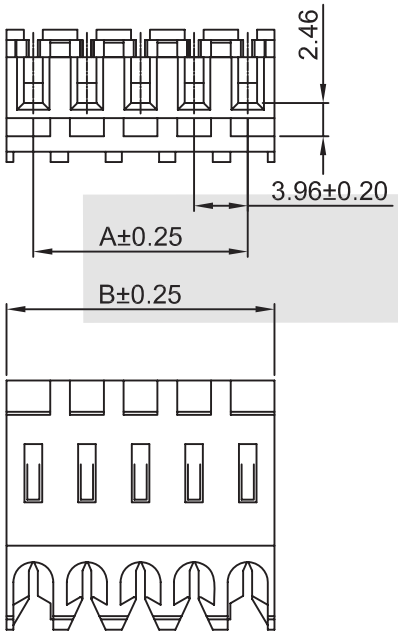

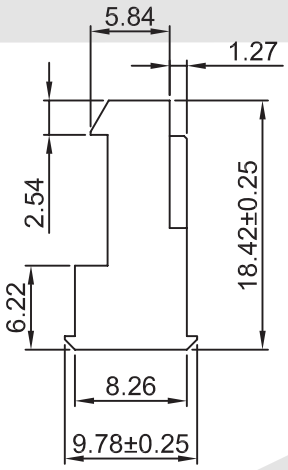

PART NO.	Dimensions	
	A	B
02	3.96	7.92
03	7.92	11.88
04	11.88	15.84
05	15.84	19.80
06	19.80	23.76
07	23.76	27.72
08	27.72	31.68
09	31.68	35.64
10	35.64	39.60
11	39.60	43.56
12	43.56	47.52
13	47.52	51.48
14	51.48	55.44
15	55.44	59.40
16	59.40	63.36
17	63.36	67.32
18	67.32	71.28
19	71.28	75.24
20	75.24	79.20
21	79.20	83.16
22	83.16	87.12
23	87.12	91.08
24	91.08	95.04

ORDER INFORMATION

Product NO.: KLS1-MT-3.96-XX-R

Series No.
Pitch: 3.96=3.96mm
PIN Number: 2 ~ 24Pin
O -Orange=18 AWG
Y -Yellow=20 AWG
BL-Blue=26 AWG
R -Red=22 AWG
W -White=24 AWG
BK-Black=18 ~ 26 AWG

PCB Connector Series

KLS1-MA-3.96 Pitch=3.96mm TYPE

Electrical Specification:

Rated Voltage: 250V AC.DC
Rated Current: 7A
Contact Resistance: 10mΩ max
Insulation Resistance: 1000MΩ min
Withstand voltage: 1500V AC/MIN
Temperature range for usage : -40°C~+105°C

Material:

Housing: PA66 UL94V-2
Contacts: Phosphor bronze
Plating: Tin 50u" over 100u" nickel

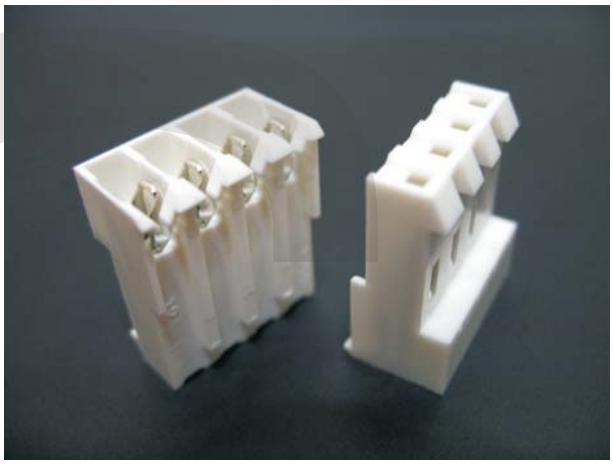

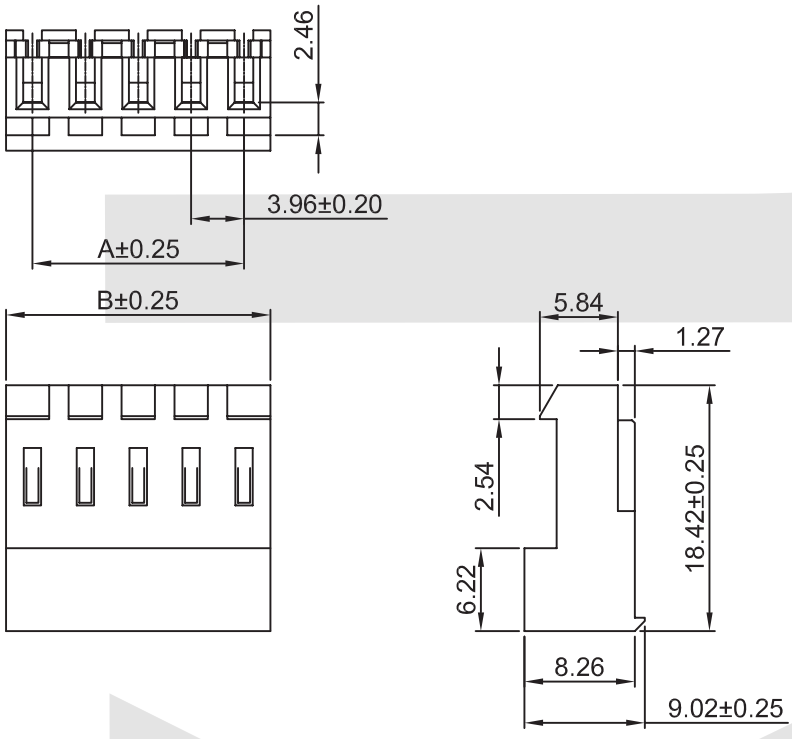

PART NO.	Dimensions	
	A	B
02	3.96	7.92
03	7.92	11.88
04	11.88	15.84
05	15.84	19.80
06	19.80	23.76
07	23.76	27.72
08	27.72	31.68
09	31.68	35.64
10	35.64	39.60
11	39.60	43.56
12	43.56	47.52
13	47.52	51.48
14	51.48	55.44
15	55.44	59.40
16	59.40	63.36
17	63.36	67.32
18	67.32	71.28
19	71.28	75.24
20	75.24	79.20
21	79.20	83.16
22	83.16	87.12
23	87.12	91.08
24	91.08	95.04

ORDER INFORMATION

Product NO.: KLS1-MA-3.96-XX-R

Series No.
Pitch: 3.96=3.96mm
PIN Number: 2 ~ 24Pin
O -Orange=18 AWG
Y -Yellow=20 AWG
BL-Blue=26 AWG
R -Red=22 AWG
W -White=24 AWG
BK-Black=18 ~ 26 AWG

PCB Connector Series

KLS1-XM1-450 Pitch=4.50mm TYPE

Electrical Specification:

Rated Voltage: 300V AC.DC
Rated Current: 10A
Contact Resistance: 0.015Ω max
Insulation Resistance: 1000MΩ min
Withstand voltage: 1500V AC/MIN
Temperature range for usage : -40°C~+105°C



Material:

Contacts: Phosphor Bronze
Plating: Tin 50u" over 100u" nickel
Wire range : AWG#24~#20

Male Terminal

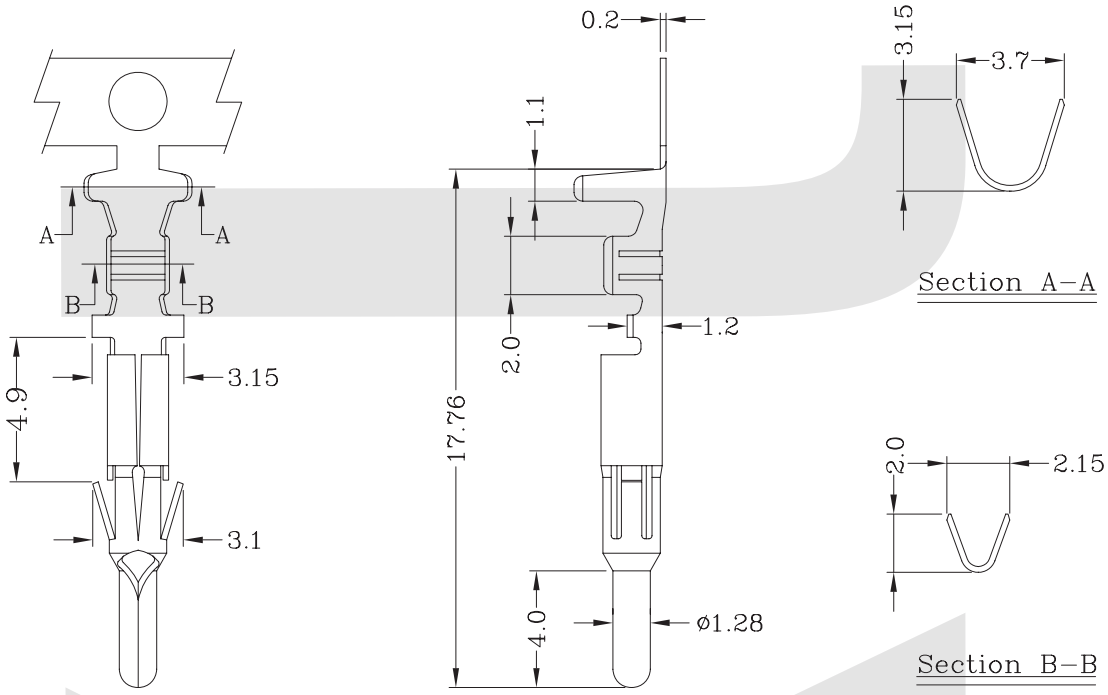

ORDER INFORMATION

Product NO.: KLS1-XM1-4.50-MT

Series No.
Pitch: 4.50=4.50mm
Type: FH=Female Housing
MH=Male Housing
MT=Male Termina
FT=Female Terminall

PCB Connector Series

KLS1-XM1-450 Pitch=4.50mm TYPE

Electrical Specification:

Rated Voltage: 300V AC.DC
Rated Current: 10A
Contact Resistance: 0.015Ω max
Insulation Resistance: 1000MΩ min
Withstand voltage: 1500V AC/MIN
Temperature range for usage : -40°C~+105°C



Material:

Contacts: Phosphor Bronze
Plating: Tin 50u" over 100u" nickel
Wire range : AWG#24~#20

Female Terminal

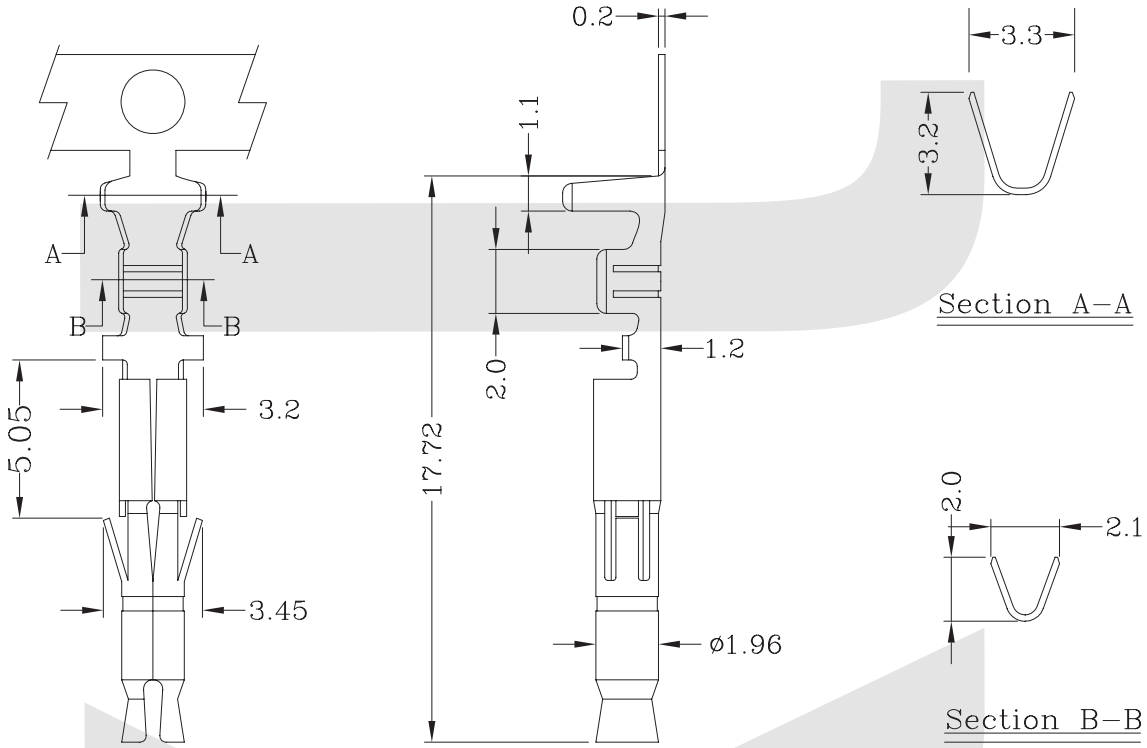

ORDER INFORMATION

Product NO.: KLS1-XM1-4.50-FT

Type: FH=Female Housing MT=Male Termina
MH=Male Housing FT=Female Terminall

Series No.

Pitch: 4.50=4.50mm

PCB Connector Series

KLS1-XM1-450 Pitch=4.50mm TYPE

Electrical Specification:

Rated Voltage: 300V AC.DC
Rated Current: 10A
Contact Resistance: 0.015Ω max
Insulation Resistance: 1000MΩ min
Withstand voltage: 1500V AC/MIN
Temperature range for usage : -40°C~+105°C



Material:

Housing: PA66 (PA66) UL94V-2
Wire range : AWG#24~#20

Female Housing	Male Housing
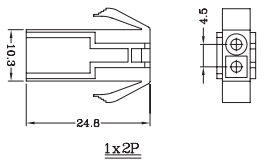 1x2P	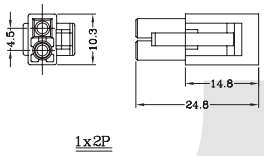 1x2P
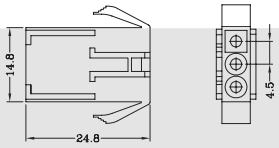 1x3P	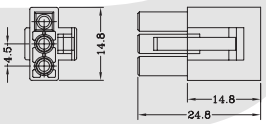 1x3P
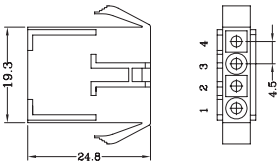 1x4P	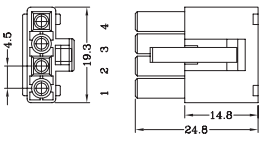 1x4P
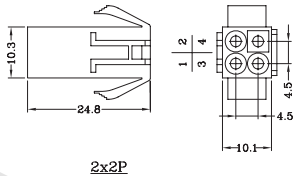 2x2P	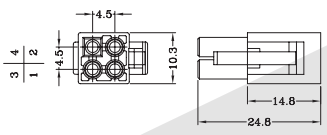 2x2P

ORDER INFORMATION

Product NO.: KLS1-XM1-4.50-1X2-FH

Series No.
Pitch: 4.50=4.50mm
Type: FH=Female Housing MT=Male Termina
MH=Male Housing FT=Female Terminall
No. of Pins: 1-Single layer 2-Double layer
3-Sthree Double layer
Poles:1X2 1X3 1X4 2X2 2X3 3X3 3X4 3X5

PCB Connector Series

I

KLS1-XM1-450 Pitch=4.50mm TYPE

Electrical Specification:

Rated Voltage: 300V AC.DC
Rated Current: 10A
Contact Resistance: 0.015Ω max
Insulation Resistance: 1000MΩ min
Withstand voltage: 1500V AC/MIN
Temperature range for usage : -40°C~+105°C



Material:

Housing: PA66 (PA66) UL94V-2
Wire range : AWG#24~#20

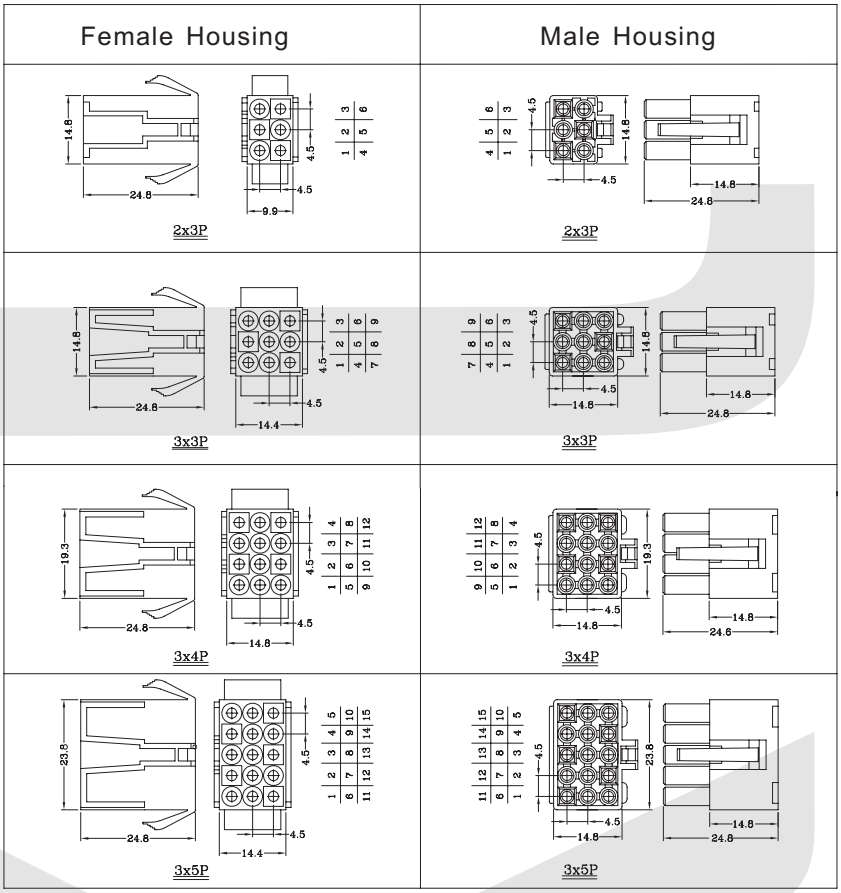

ORDER INFORMATION

Product NO.: KLS1-XM1-4.50-1X2-FH

Series No.
Pitch: 4.50=4.50mm
Type: FH=Female Housing MT=Male Termina
MH=Male Housing FT=Female Terminall
No. of Pins: 1-Single layer 2-Double layer
3-Sthree Double layer
Poles:1X2 1X3 1X4 2X2 2X3 3X3 3X4 3X5

PCB Connector Series

KLS1-5.03 Pitch=5.03mm TYPE

Electrical Specification:

Voltage rating: 300V. AC / DC
Current rating: 12A
Contact resistance: 0.01Ω max
Insulator resistance: 1000MΩ min
Withstand voltage: 1500V AC / MIN
Temperature range for usage : -40°C~+105°C



Material:

Contacts: Phosphor Bronze
Plating: Tin 50u" over 100u" nickel
Wire range : AWG#24~#20

Male Terminal

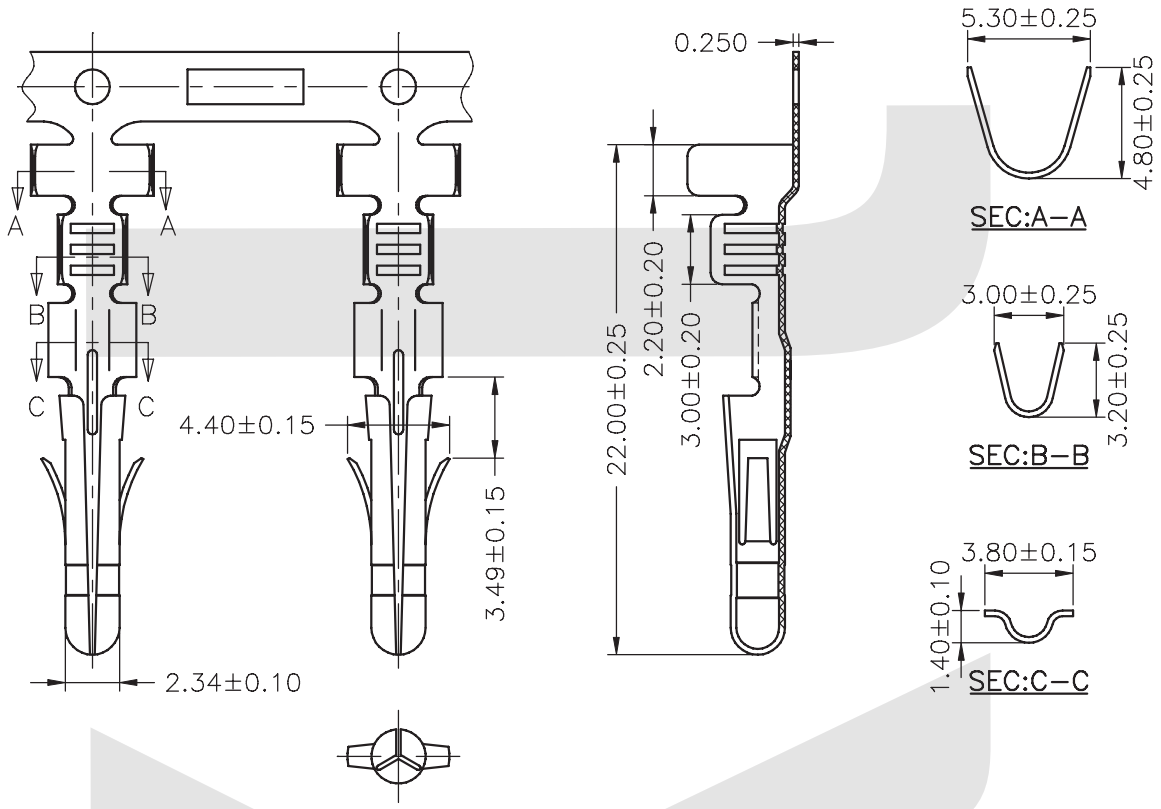

ORDER INFORMATION

Product NO.: KLS1-5.03-MT

Pitch: 5.03=5.03mm

Type: FH=Female Housing MT=Male Termina
MH=Male Housing FT=Female Terminall

KLS electronic
www.cnkls.com

I

PCB Connector Series

KLS1-5.03 Pitch=5.03mm TYPE

Electrical Specification:

Voltage rating: 300V. AC / DC
Current rating: 12A
Contact resistance: 0.01Ω max
Insulator resistance: 1000MΩ min
Withstand voltage: 1500V AC / MIN
Temperature range for usage : -40°C~+105°C



Material:

Contacts: Phosphor Bronze
Plating: Tin 50u" over 100u" nickel
Wire range : AWG#24~#20

Female Terminal

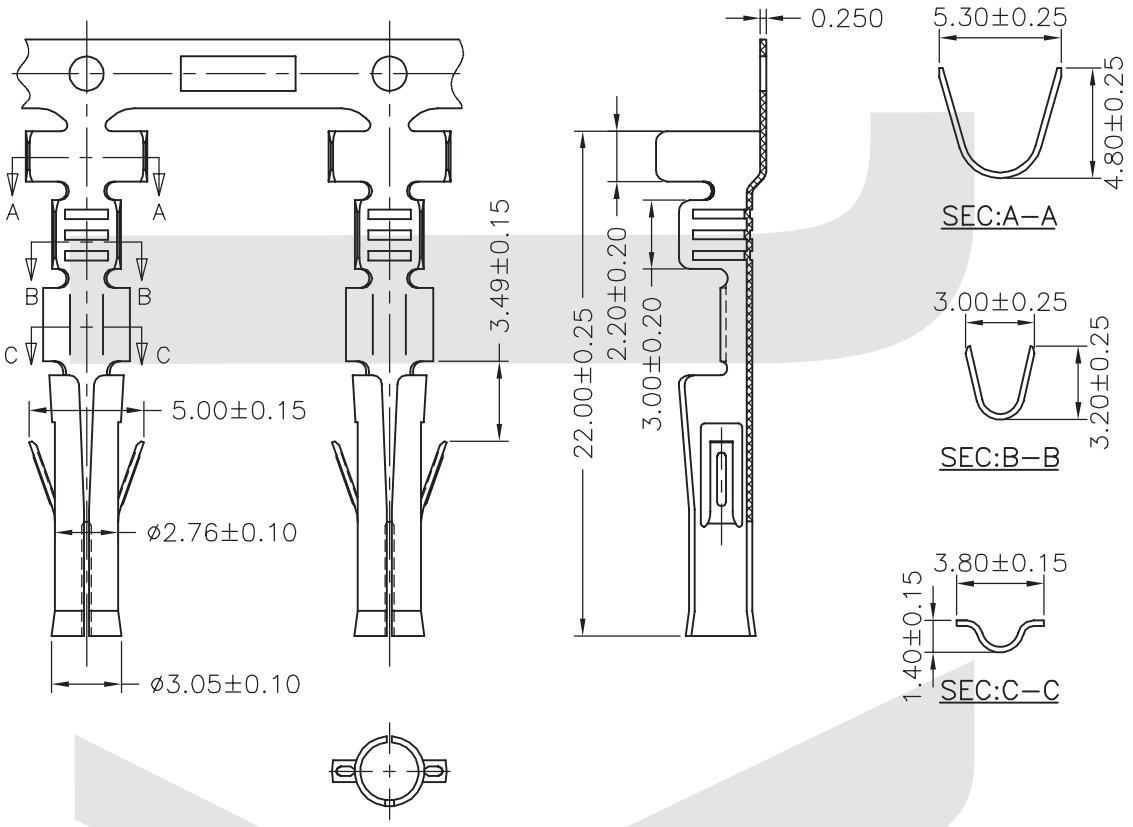

ORDER INFORMATION

Product NO.: KLS1-5.03-FT

Pitch: 5.03=5.03mm

Type: FH=Female Housing MT=Male Termina
MH=Male Housing FT=Female Terminall

PCB Connector Series

KLS1-5.03 Pitch=5.03mm TYPE

Electrical Specification:

Voltage rating: 300V. AC / DC
Current rating: 12A
Contact resistance: 0.01Ω max
Insulator resistance: 1000MΩ min
Withstand voltage: 1500V AC / MIN
Temperature range for usage : -40°C~+105°C



Material:

Housing: PA66 (PA66) UL94V-2
Wire range : AWG#24~#20

Male Housing

MH
MHA (WITHOUT MOUNTING EAR)

Female Housing

FH
FHA (WITHOUT MOUNTING EAR)

1X2

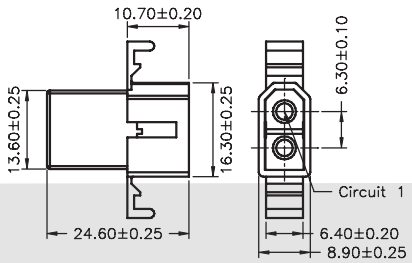

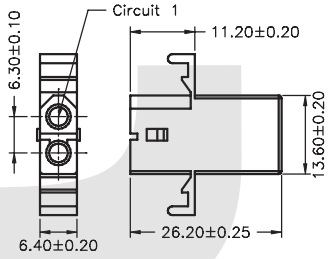

1X3

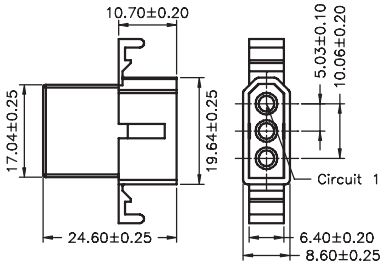

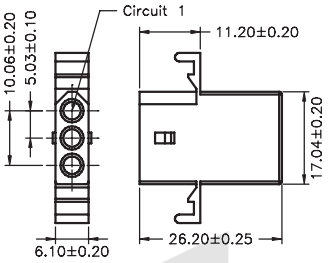

ORDER INFORMATION

Product NO.: KLS1-5.03-1X2-FH

Pitch: 5.03=5.03mm

Type: FH=Female Housing MT=Male Termina
MH=Male Housing FT=Female Terminall

No. of Pins: 1-Single layer 2-Double layer
3-Sthree Double layer
Poles:1X2 1X3 1X4 1X5 2X2 3X2 3X3 3X4 3X5

PCB Connector Series

KLS1-5.03 Pitch=5.03mm TYPE

Male Housing

Female Housing

1X4

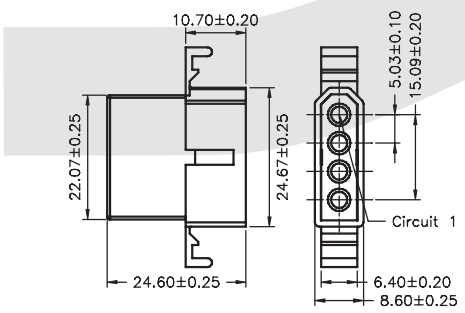

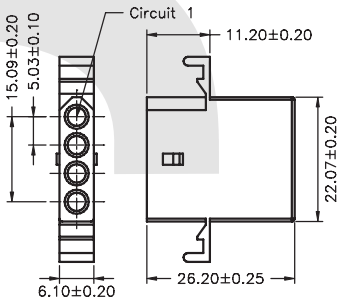

1X5

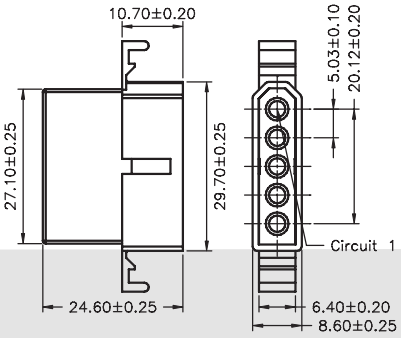

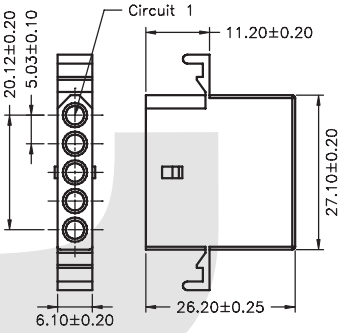

2X2

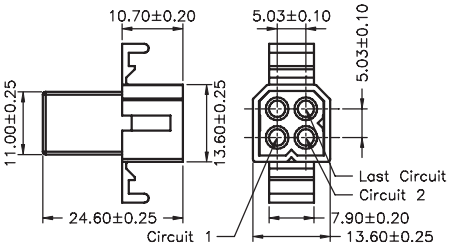

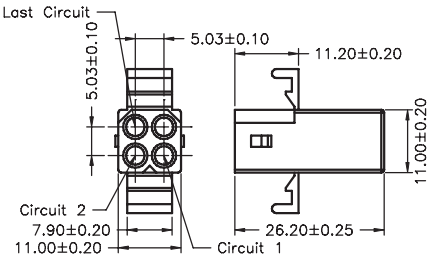

3X2

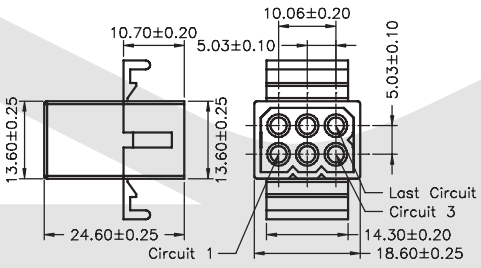

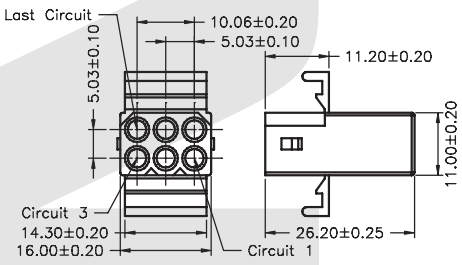

PCB Connector Series

KLS1-5.03 Pitch=5.03mm TYPE

Male Housing

Female Housing

3X3

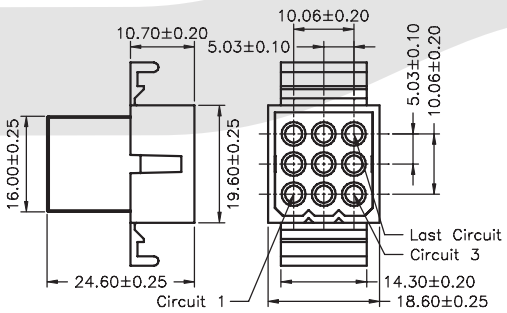

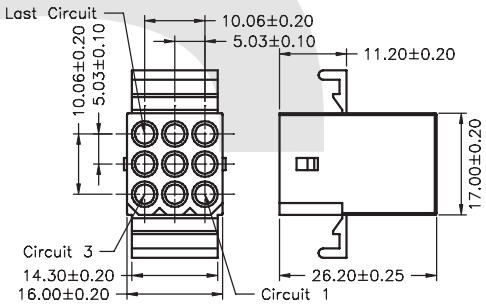

3X4

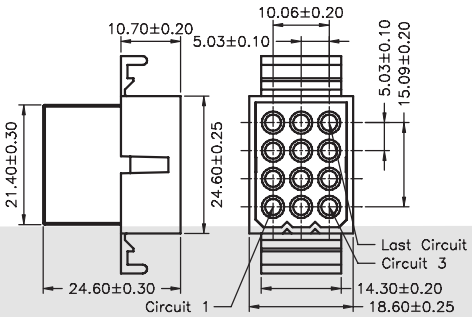

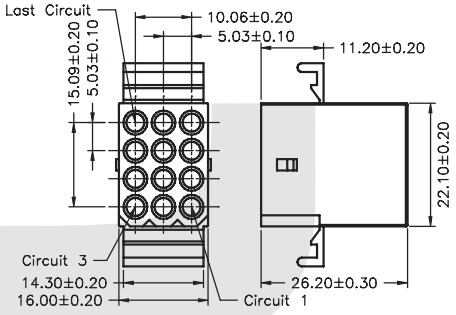

3X5

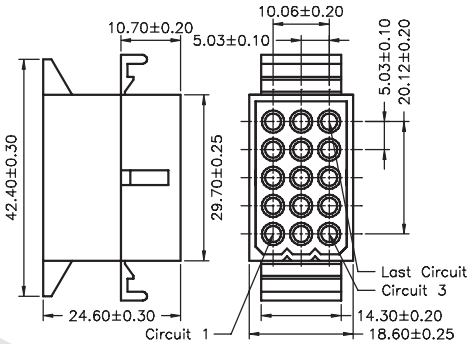

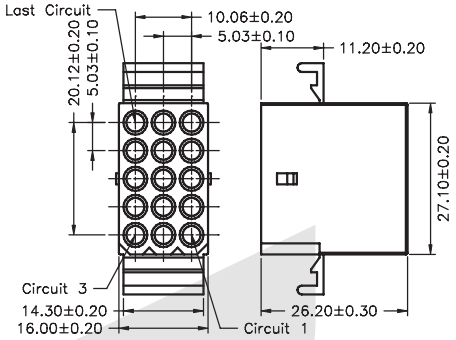

PCB Connector Series

KLS1-5.08 Pitch=5.08mm TYPE

Electrical Specification:

Rated Voltage: 250V AC.DC
Rated Current: 5A
Contact Resistance: 0.02 Ohm max
Insulation Resistance: 1000M Ohm min
Withstand voltage: 1500V AC/MIN
Temperature range for usage : -25°C~+85°C
P.C board thickness : 1.6mm

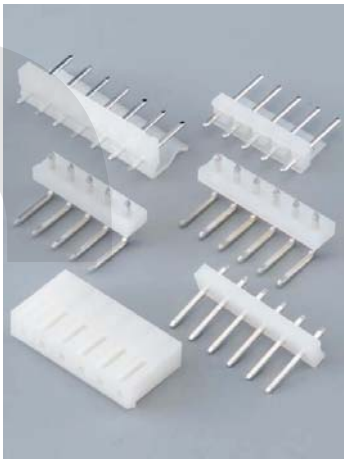

Material:

Housing: PA66 (PA66) UL94V-2
Contacts: Brass or Phosphor Bronze
Plating: Tin 50u" over 100u" nickel
Wire range : AWG#24~#18

Housing

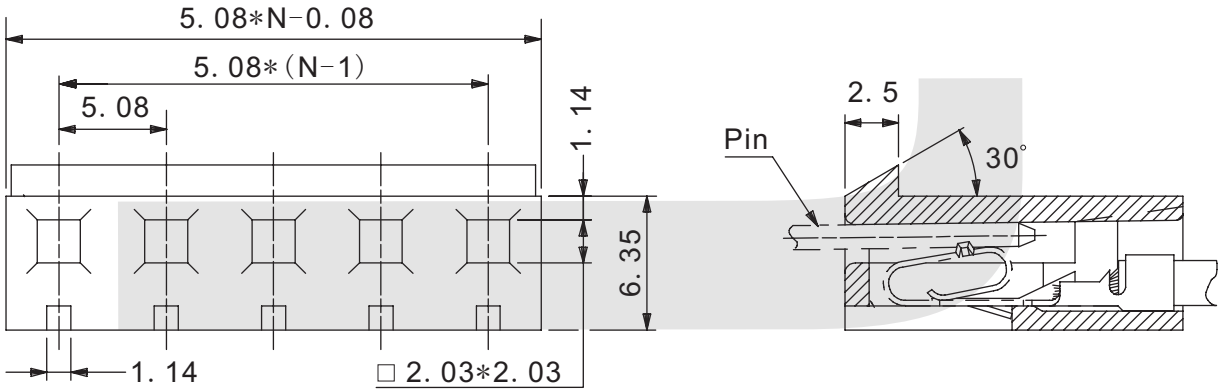

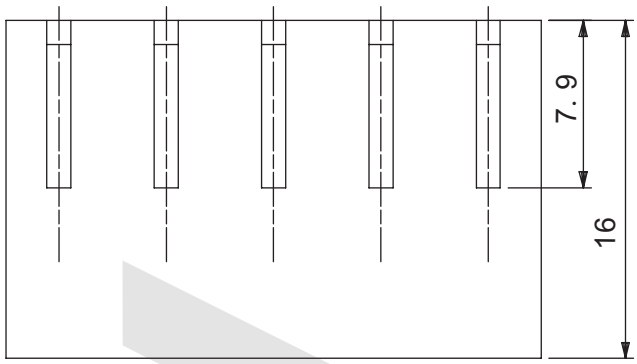

ORDER INFORMATION

Product NO.: KLS1-5.08-XX-H

Pitch: 5.08=5.08mm
PIN Number: 02 ~ 14Pin
Type: H=Housing
S=Straight Male pin
T=Terminal
R=Right Male pin

KLS electronic
www.cnkls.com

I

PCB Connector Series

KLS1-5.08 Pitch=5.08mm TYPE

Electrical Specification:

Rated Voltage: 250V AC.DC
Rated Current: 5A
Contact Resistance: 0.02 Ohm max
Insulation Resistance: 1000M Ohm min
Withstand voltage: 1500V AC/MIN
Temperature range for usage : -25ºC~+85ºC
P.C board thickness : 1.6mm

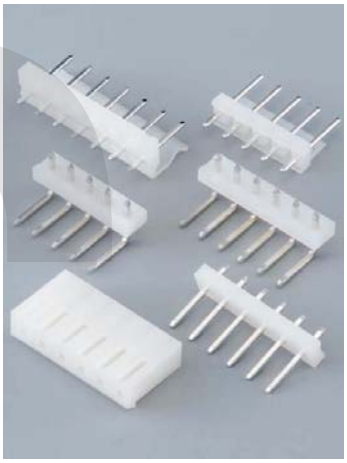

Material:

Housing: PA66 (PA66) UL94V-2
Contacts: Brass or Phosphor Bronze
Plating: Tin 50u" over 100u" nickel
Wire range : AWG#24~#18

Terminal

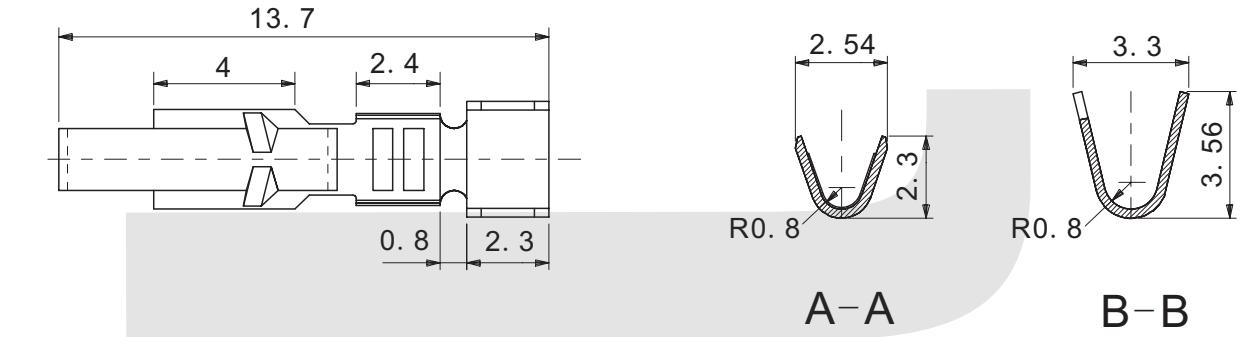

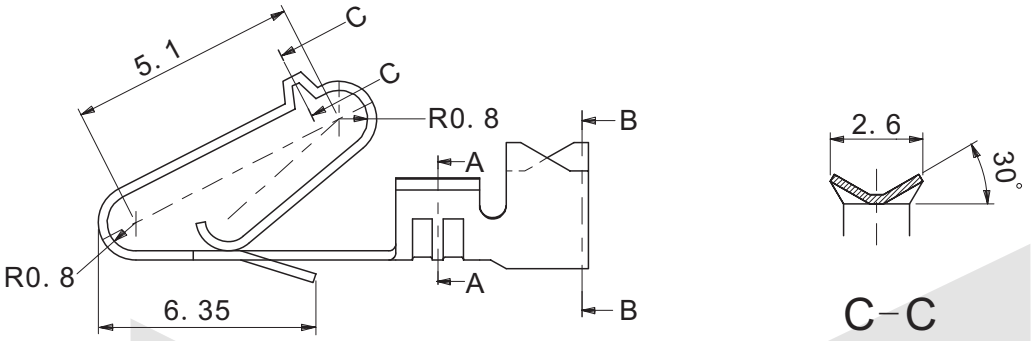

ORDER INFORMATION

Product NO.: KLS1-5.08-T

Type: H=Housing T=Terminal
S=Straight Male pin R=Right Male pin

Pitch: 5.08=5.08mm

KLS electronic
www.cnkls.com

I

PCB Connector Series

KLS1-5.08 Pitch=5.08mm TYPE

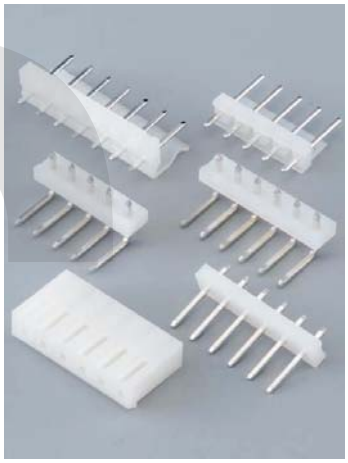

Electrical Specification:

Rated Voltage: 250V AC.DC
Rated Current: 5A
Contact Resistance: 0.02 Ohm max
Insulation Resistance: 1000M Ohm min
Withstand voltage: 1500V AC/MIN
Temperature range for usage : -25°C~+85°C
P.C board thickness : 1.6mm

Material:

Housing: PA66 (PA66) UL94V-2
Contacts: Brass or Phosphor Bronze
Plating: Tin 50u" over 100u" nickel
Wire range : AWG#24~#18

Straight

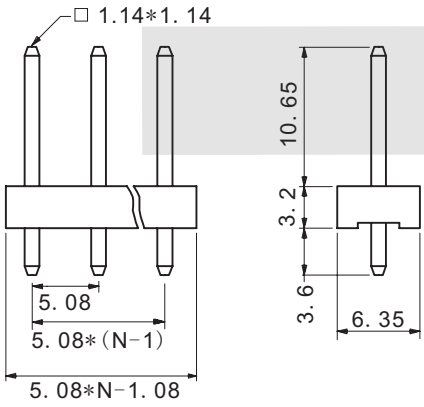

SA Type

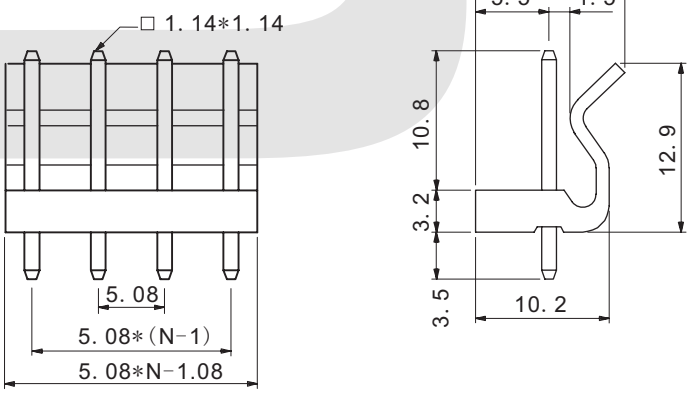

S Type

ORDER INFORMATION

Product NO.: KLS1-5.08-XX- S

Pitch: 5.08=5.08mm
PIN Number: 02 ~ 14Pin
Type: H=Housing
S=Straight Male pin
T=Terminal
R=Right Male pin

PCB Connector Series

KLS1-5.08 Pitch=5.08mm TYPE

Electrical Specification:

Rated Voltage: 250V AC.DC
Rated Current: 5A
Contact Resistance: 0.02 Ohm max
Insulation Resistance: 1000M Ohm min
Withstand voltage: 1500V AC/MIN
Temperature range for usage : -25°C~+85°C
P.C board thickness : 1.6mm

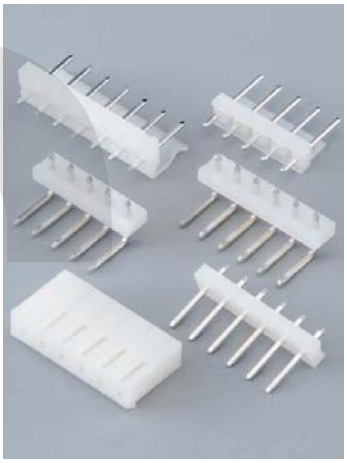

Material:

Housing: PA66 (PA66) UL94V-2
Contacts: Brass or Phosphor Bronze
Plating: Tin 50u" over 100u" nickel
Wire range : AWG#24~#18

Right Male

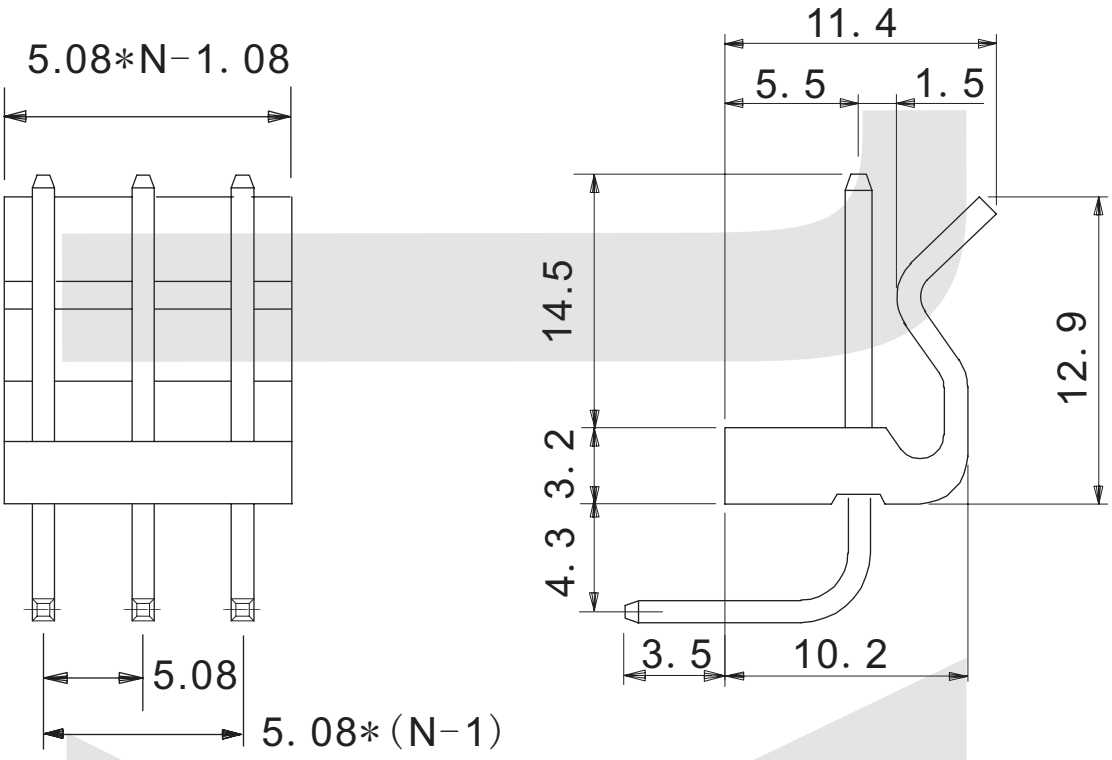

ORDER INFORMATION

Product NO.: KLS1-5.08-XX-R

Pitch: 5.08=5.08mm
PIN Number: 02 ~ 14Pin
Type: H=Housing
S=Straight Male pin
T=Terminal
R=Right Male pin

KLS electronic
www.cnkls.com

I

PCB Connector Series

KLS1-XL1-5.08 Pitch=5.08mm TYPE

Electrical Specification:

Rated Voltage: 250V AC.DC
Rated Current: 5A
Contact Resistance: 0.01Ω max
Insulation Resistance: 1000MΩ min
Withstand voltage: 500V AC/MIN
Temperature range for usage : -40°C~+105°C

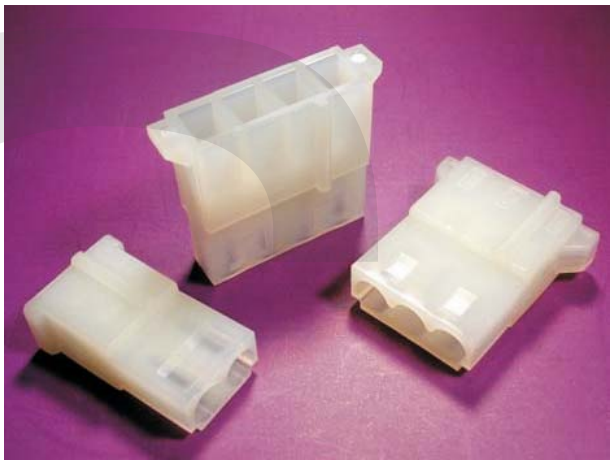

Material:

Housing: PA66 (PA66) UL94V-2
Contacts: Phosphor Bronze
Plating: Tin 50u" over 100u" nickel
Wire range : AWG#30~#22

Male Housing

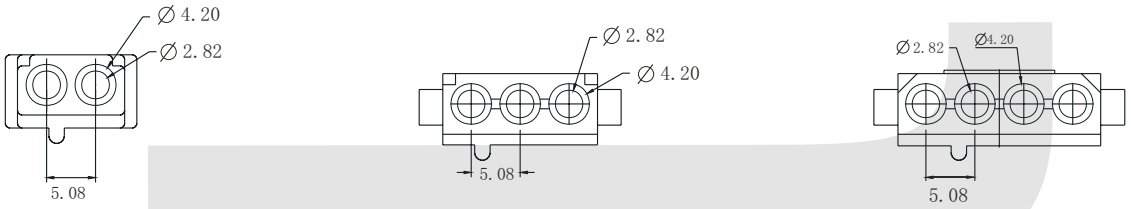

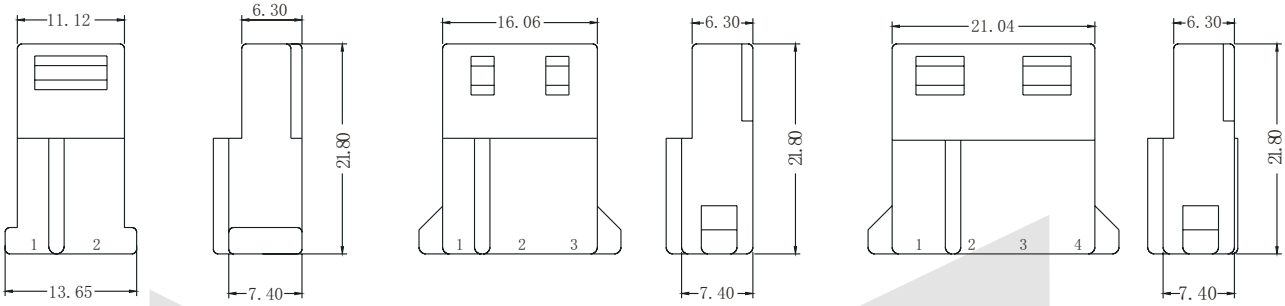

ORDER INFORMATION

Product NO.: KLS1-XL1-5.08-04-MH

Series No.
Pitch: 5.08=5.08mm
Pin Number: 2Pin 3Pin 4Pin
Type:MH=Male Housing FT=Female Terminal
FH=Female Housing MT=Male Terminal
S=Straight pin R=Right pin

PCB Connector Series

KLS1-XL1-5.08 Pitch=5.08mm TYPE

Electrical Specification:

Rated Voltage: 250V AC.DC
Rated Current: 5A
Contact Resistance: 0.01Ω max
Insulation Resistance: 1000MΩ min
Withstand voltage: 500V AC/MIN
Temperature range for usage : -40°C~+105°C

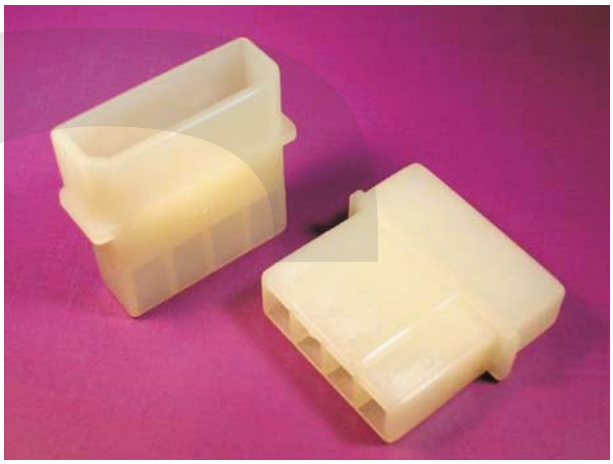

Material:

Housing: PA66 (PA66) UL94V-2
Contacts: Phosphor Bronze
Plating: Tin 50u" over 100u" nickel
Wire range : AWG#30~#22

Female Housing

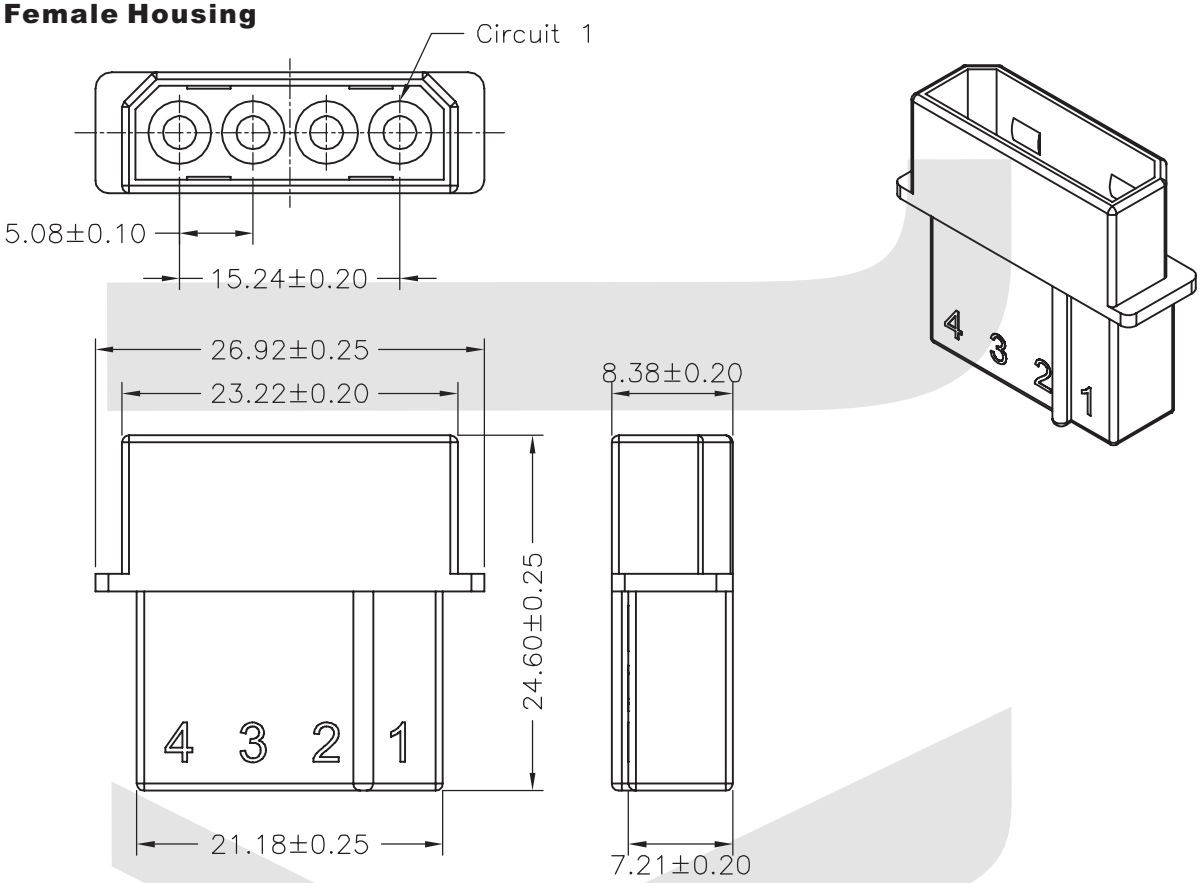

ORDER INFORMATION

Product NO.: KLS1-XL1-5.08-04-FH

Series No.
Pitch: 5.08=5.08mm
Pin Number: 2Pin 3Pin 4Pin
Type:MH=Male Housing FT=Female Terminal
FH=Female Housing MT=Male Terminal
S=Straight pin R=Right pin

PCB Connector Series

KLS1-XL1-5.08 Pitch=5.08mm TYPE

Electrical Specification:

Rated Voltage: 250V AC.DC
Rated Current: 5A
Contact Resistance: 0.01Ω max
Insulation Resistance: 1000MΩ min
Withstand voltage: 500V AC/MIN
Temperature range for usage : -40°C~+105°C



Material:

Housing: PA66 (PA66) UL94V-2
Contacts: Phosphor Bronze
Plating: Tin 50u" over 100u" nickel
Wire range : AWG#30~#22

Male Terminal

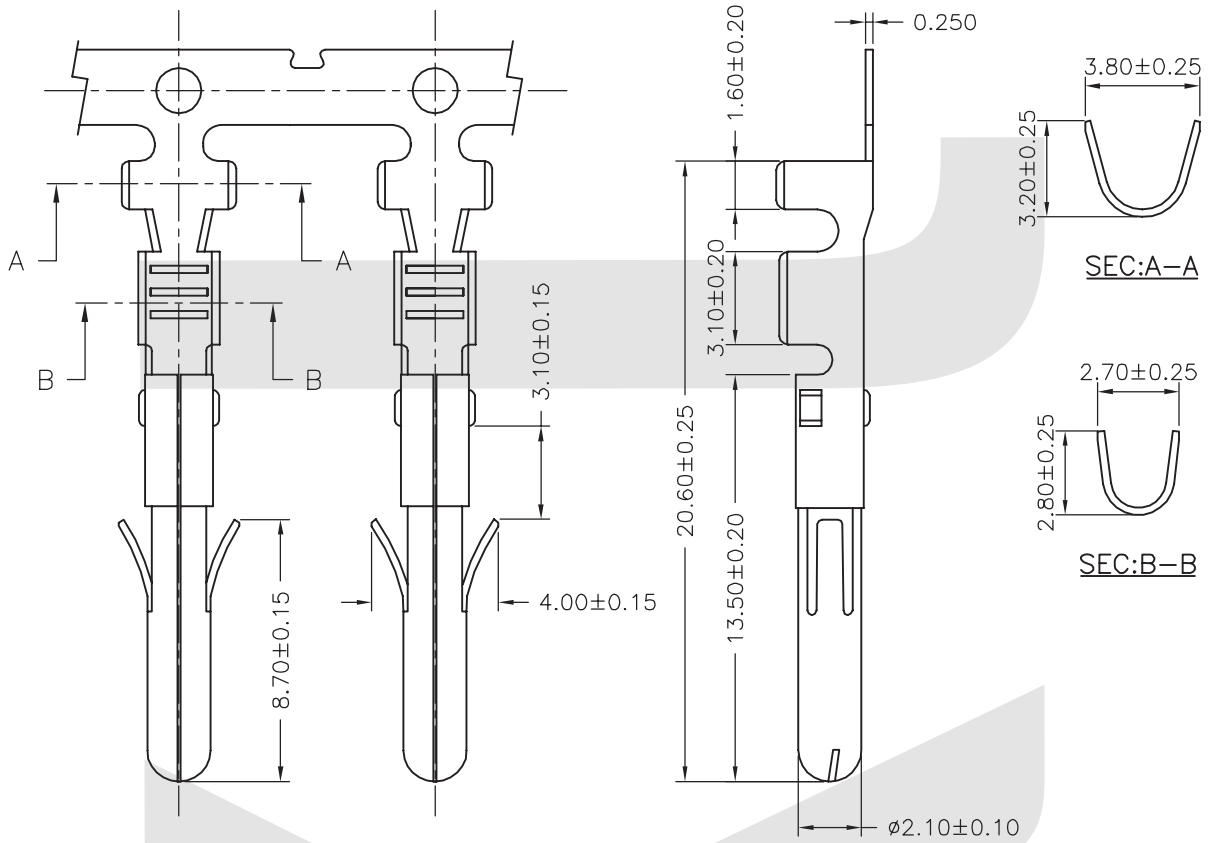

ORDER INFORMATION

Product NO.: KLS1-XL1-5.08-MT

Series No.
Pitch: 5.08=5.08mm

Type:MH=Male Housing FT=Female Terminal
FH=Female Housing MT=Male Terminal
S=Straight pin R=Right pin

PCB Connector Series

KLS1-XL1-5.08 Pitch=5.08mm TYPE

Electrical Specification:

Rated Voltage: 250V AC.DC
Rated Current: 5A
Contact Resistance: 0.01Ω max
Insulation Resistance: 1000MΩ min
Withstand voltage: 500V AC/MIN
Temperature range for usage : -40°C~+105°C

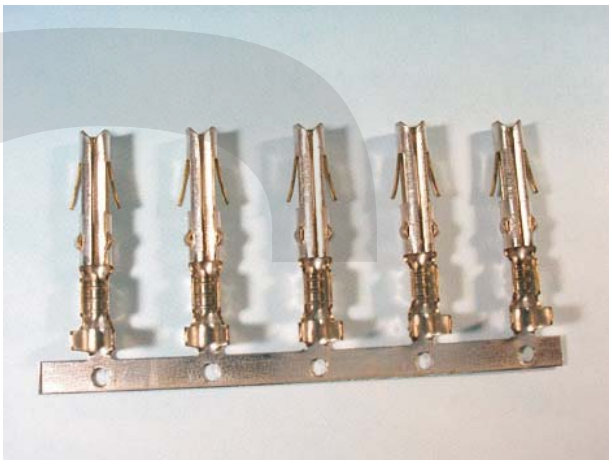

Material:

Housing: PA66 (PA66) UL94V-2
Contacts: Phosphor Bronze
Plating: Tin 50u" over 100u" nickel
Wire range : AWG#30~#22

Female Terminal

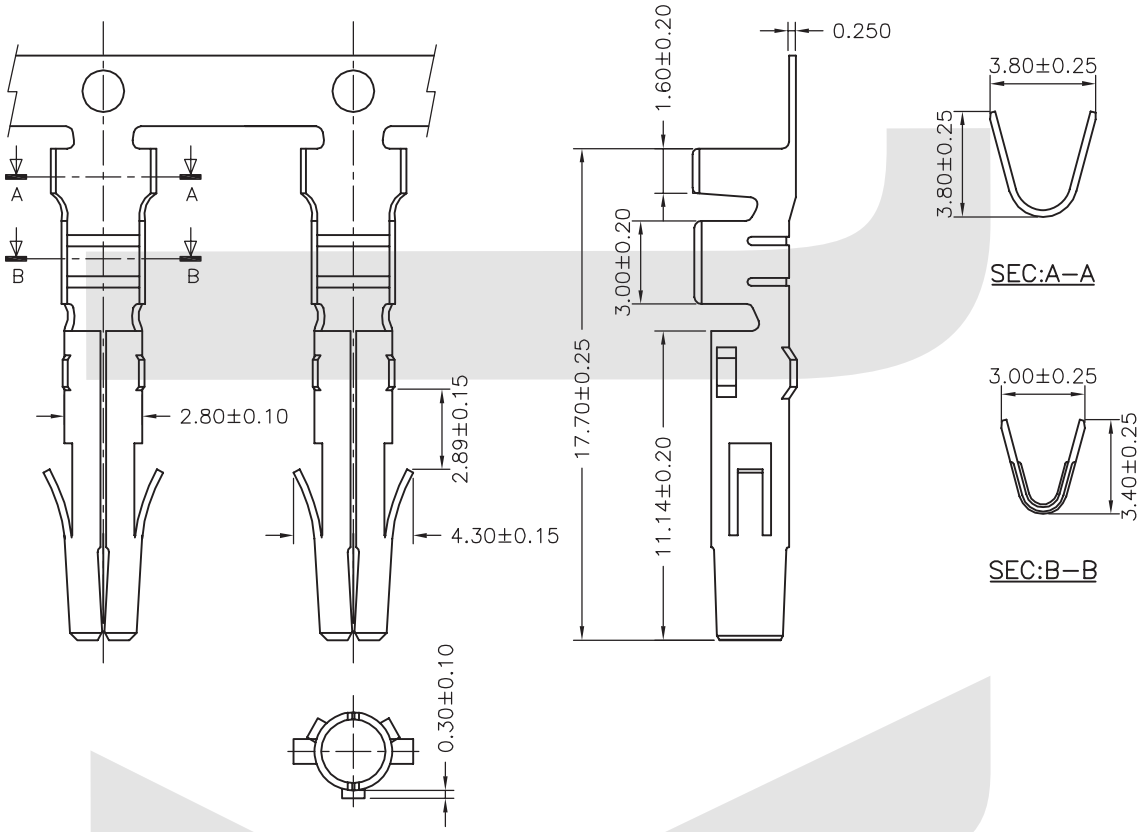

ORDER INFORMATION

Product NO.: KLS1-XL1-5.08- FT

Type:MH=Male Housing FT=Female Terminal
FH=Female Housing MT=Male Terminal
S=Straight pin R=Right pin

Series No.
Pitch: 5.08=5.08mm

PCB Connector Series

KLS1-XL1-5.08 Pitch=5.08mm TYPE

Electrical Specification:

Rated Voltage: 250V AC.DC
Rated Current: 5A
Contact Resistance: 0.01Ω max
Insulation Resistance: 1000MΩ min
Withstand voltage: 500V AC/MIN
Temperature range for usage : -40°C~+105°C



Material:

Housing: PA66 (PA66) UL94V-2
Contacts: Brass
Plating: Tin 50u" over 100u" nickel
Wire range : AWG#30~#22

Straight Male pin

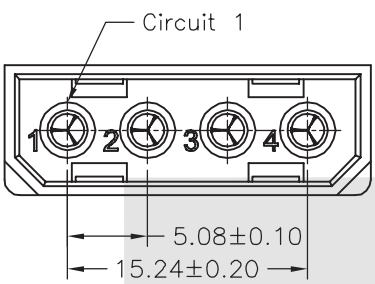

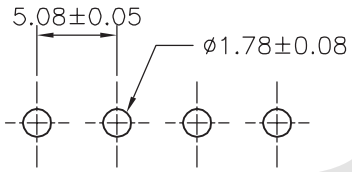

P.C.B. LAYOUT

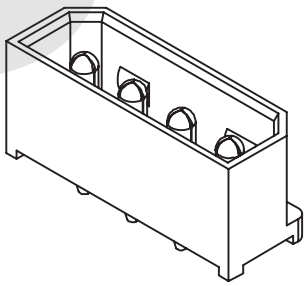

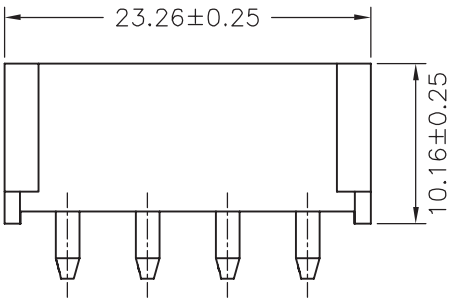

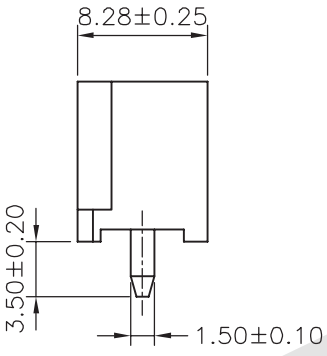

ORDER INFORMATION

Product NO.: KLS1-XL1-5.08-04- S

Series No.
Pitch: 5.08=5.08mm
Pin Number: 2Pin 3Pin 4Pin
Type:MH=Male Housing FT=Female Terminal
FH=Female Housing MT=Male Terminal
S=Straight pin R=Right pin

PCB Connector Series

KLS1-XL1-5.08 Pitch=5.08mm TYPE

Electrical Specification:

Rated Voltage: 250V AC.DC
Rated Current: 5A
Contact Resistance: 0.01Ω max
Insulation Resistance: 1000MΩ min
Withstand voltage: 500V AC/MIN
Temperature range for usage : -40°C~+105°C

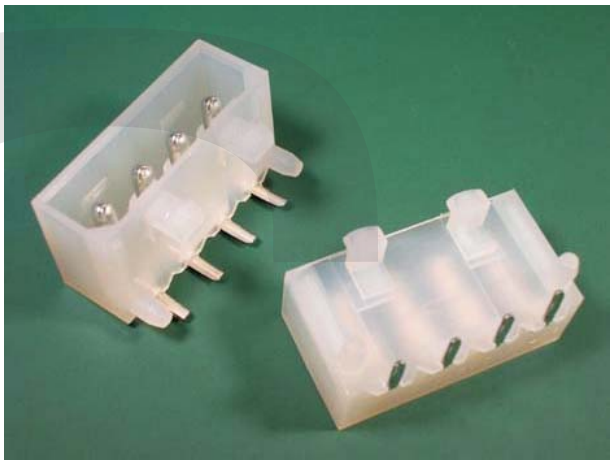

Material:

Housing: PA66 (PA66) UL94V-2
Contacts: Brass
Plating: Tin 50u" over 100u" nickel
Wire range : AWG#30~#22

Right Male pin

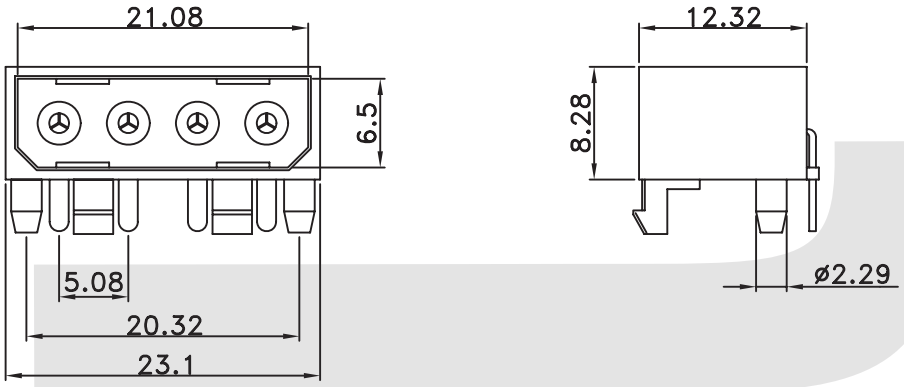

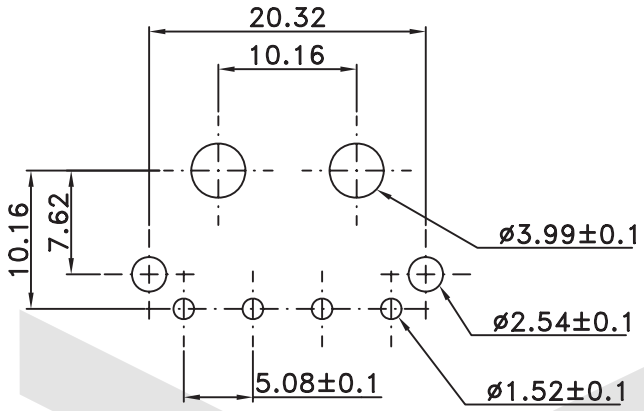

ORDER INFORMATION

Product NO.: KLS1-XL1-5.08-04- R

Series No.
Pitch: 5.08=5.08mm
Pin Number: 2Pin 3Pin 4Pin
Type:MH=Male Housing FT=Female Terminal
FH=Female Housing MT=Male Terminal
S=Straight pin R=Right pin

Connector Housing series

KLS1-6.35-02MH

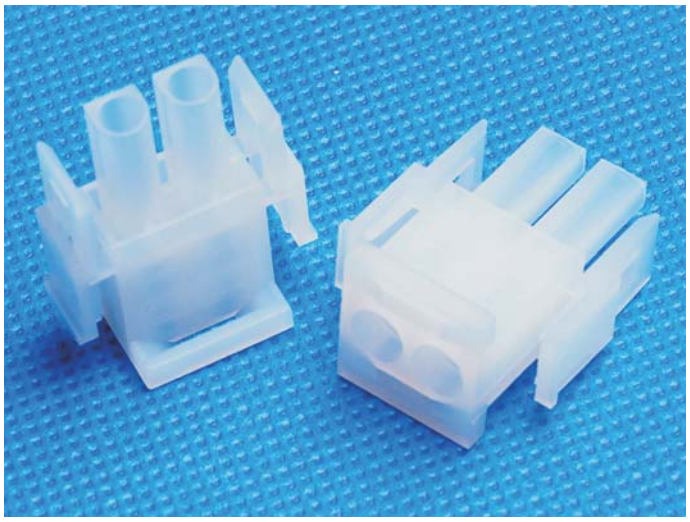

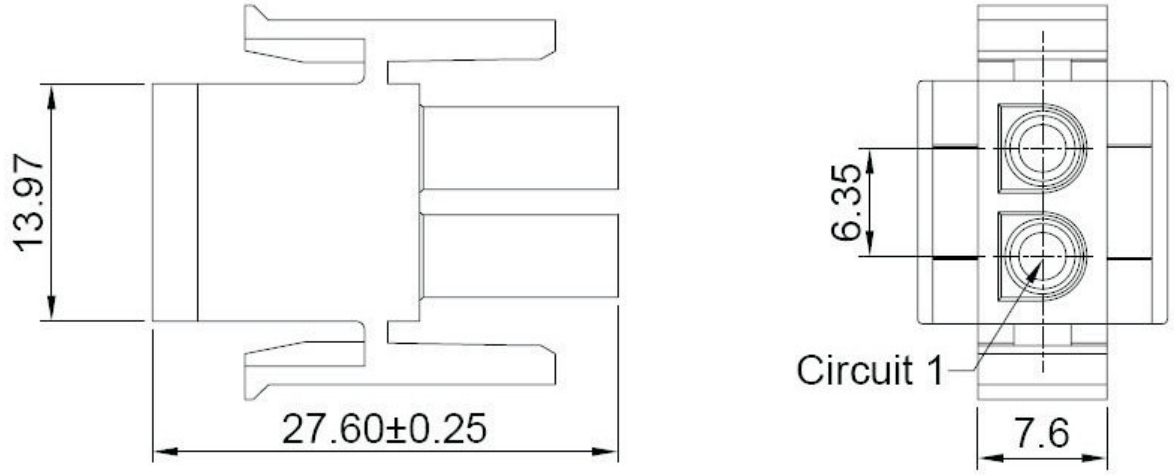

ORDER INFORMATION

KLS1-6.35-02MH

SERIES NO.

HOUSING

KLS electronic
www.cnkls.com

I

PCB Connector Series

KLS1-XM1-3.00 Pitch=3.00mm TYPE

Electrical Specification:

Rated Voltage: 250V AC.DC
Rated Current: 3A
Contact Resistance: 0.015Ω max
Insulation Resistance: 1000MΩ min
Withstand voltage: 500V AC/MIN
Temperature range for usage : -40°C~+105°C



Material:

Housing: PA66 (PA66) UL94V-2
Contacts: Phosphor Bronze
Plating: Tin 50u" over 100u" nickel
Wire range : AWG#30~#22

Single layer Male Housing

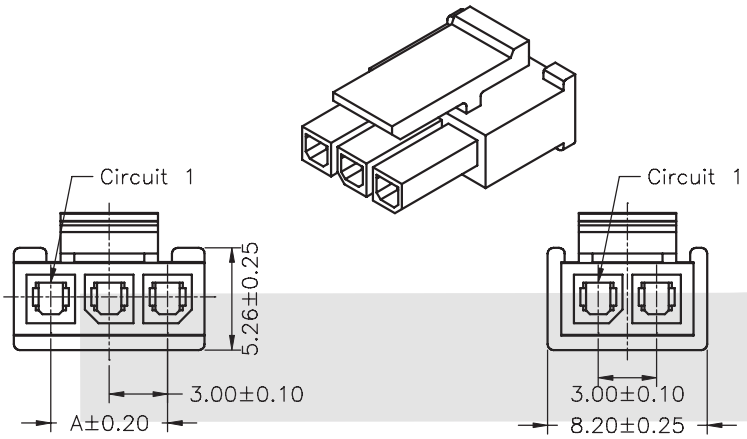

PART NO.	Dimensions	
	A	B
02	3.00	6.80
03	6.00	9.80
04	9.00	12.80
05	12.00	15.80
06	15.00	18.80
07	18.00	21.80
08	21.00	24.80
09	24.00	27.80
10	27.00	30.80
11	30.00	33.80
12	33.00	36.80

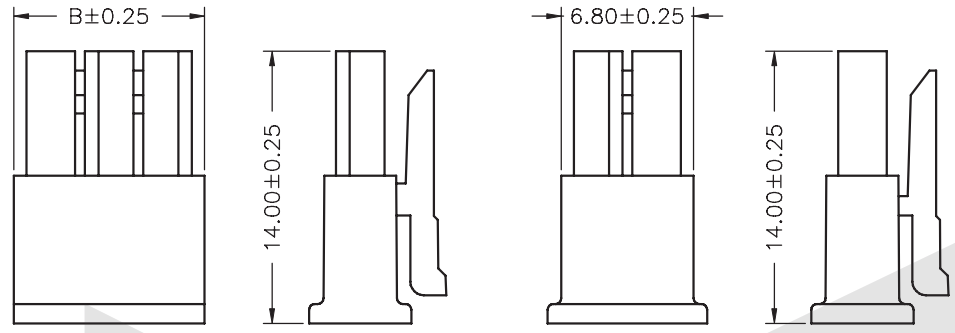

3P~12P　　2P

ORDER INFORMATION

Product NO.: KLS1-XM1-3.00 - 1X04-MH

Series No.
Pitch: 3.00=3.00mm
Type:MH=Male Housing　FT=Female Terminal
FH=Female Housing　MT=Male Terminal
S=Straight pin　R=Right pin
Pins: 1-Single layer　2-Double layer
Pin Number: 2~12Pin

I

PCB Connector Series

KLS1-XM1-3.00 Pitch=3.00mm TYPE



Electrical Specification:

Rated Voltage: 250V AC.DC
Rated Current: 3A
Contact Resistance: 0.015Ω max
Insulation Resistance: 1000MΩ min
Withstand voltage: 500V AC/MIN
Temperature range for usage : -40°C~+105°C

Material:

Housing: PA66 (PA66) UL94V-2
Contacts: Phosphor Bronze
Plating: Tin 50u" over 100u" nickel
Wire range : AWG#30~#22

Single layer Female Housing

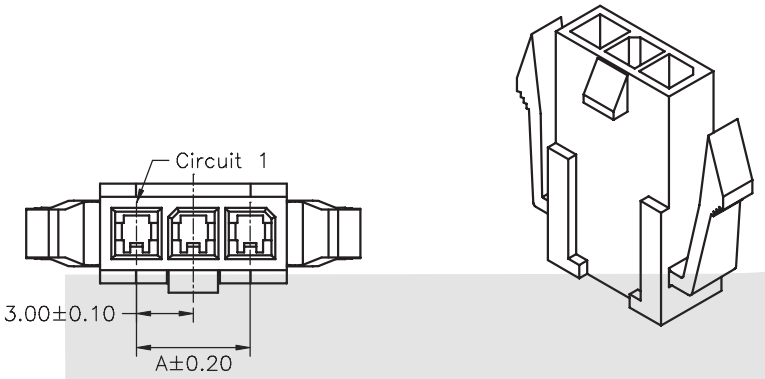

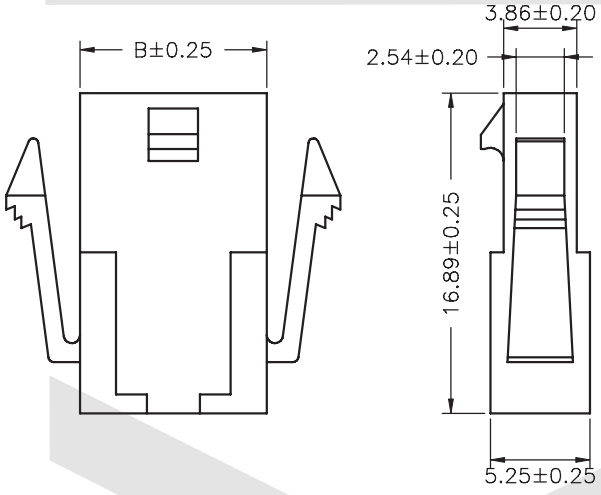

PART NO.	Dimensions	
	A	B
02	3.00	6.85
03	6.00	9.85
04	9.00	12.85
05	12.00	15.85
06	15.00	18.85
07	18.00	21.85
08	21.00	24.85
09	24.00	27.85
10	27.00	30.85
11	30.00	33.85
12	33.00	36.85

ORDER INFORMATION

Product NO.: KLS1-XM1-3.00 -1X04-FH

Series No.
Pitch: 3.00=3.00mm
Pins: 1-Single layer 2-Double layer
Pin Number: 2~12Pin
Type:MH=Male Housing FH=Female Housing S=Straight pin
FT=Female Terminal MT=Male Terminal R=Right pin

I

PCB Connector Series

KLS1-XM1-3.00 Pitch=3.00mm TYPE

Electrical Specification:

Rated Voltage: 250V AC.DC
Rated Current: 3A
Contact Resistance: 0.015Ω max
Insulation Resistance: 1000MΩ min
Withstand voltage: 500V AC/MIN
Temperature range for usage : -40°C~+105°C



Material:

Housing: PA66 (PA66) UL94V-2
Contacts: Phosphor Bronze
Plating: Tin 50u" over 100u" nickel
Wire range : AWG#30~#22

Double layer Male Housing

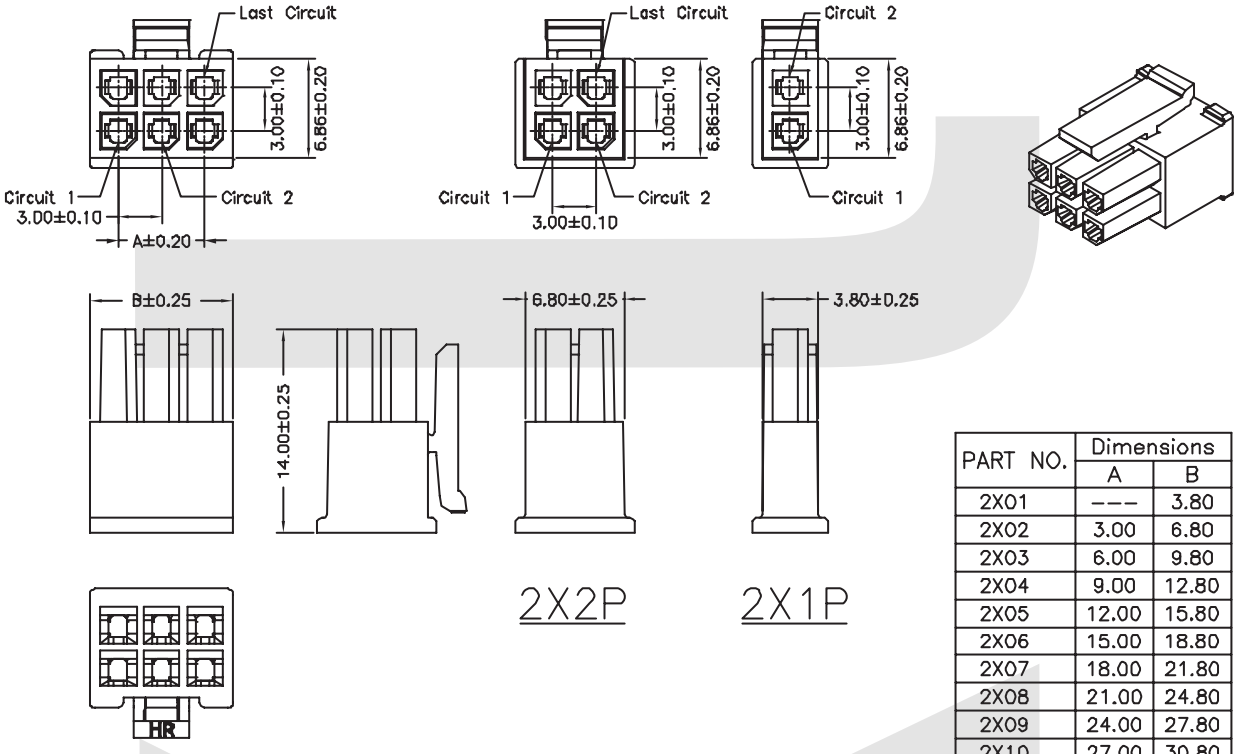

PART NO.	Dimensions	
	A	B
2X01	---	3.80
2X02	3.00	6.80
2X03	6.00	9.80
2X04	9.00	12.80
2X05	12.00	15.80
2X06	15.00	18.80
2X07	18.00	21.80
2X08	21.00	24.80
2X09	24.00	27.80
2X10	27.00	30.80
2X11	30.00	33.80
2X12	33.00	36.80

ORDER INFORMATION

Product NO.: KLS1-XM1-3.00 -2X04-MH

Series No.
Pitch: 3.00=3.00mm
Pins: 1-Single layer 2-Double layer
Pin Number: 2~12Pin
Type:MH=Male Housing FT=Female Terminal
FH=Female Housing MT=Male Terminal
S=Straight pin R=Right pin

PCB Connector Series

KLS1-XM1-3.00 Pitch=3.00mm TYPE

Electrical Specification:

Rated Voltage: 250V AC.DC
Rated Current: 3A
Contact Resistance: 0.015Ω max
Insulation Resistance: 1000MΩ min
Withstand voltage: 500V AC/MIN
Temperature range for usage : -40°C~+105°C



Material:

Housing: PA66 (PA66) UL94V-2
Contacts: Phosphor Bronze
Plating: Tin 50u" over 100u" nickel
Wire range : AWG#30~#22

Double layer Female Housing

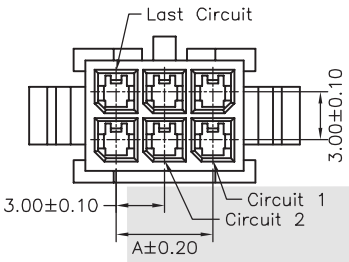

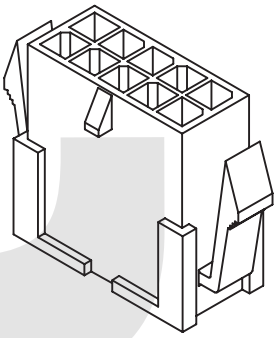

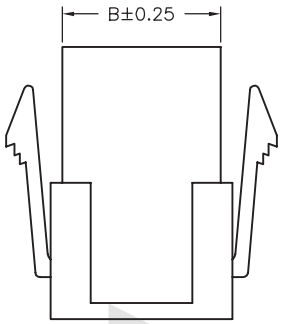

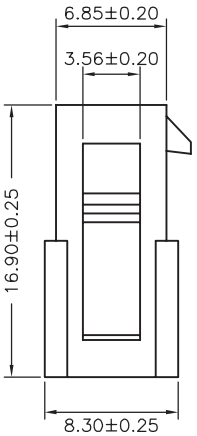

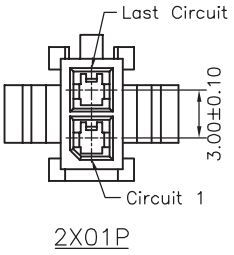

2X01P

PART NO.	Dimensions	
	A	B
2X01	---	3.85
2X02	3.00	6.85
2X03	6.00	9.85
2X04	9.00	12.85
2X05	12.00	15.85
2X06	15.00	18.85
2X07	18.00	21.85
2X08	21.00	24.85
2X09	24.00	27.85
2X10	27.00	30.85
2X11	30.00	33.85
2X12	33.00	36.85

ORDER INFORMATION

Product NO.: KLS1-XM1-3.00 -2X04-FH

Series No.
Pitch: 3.00=3.00mm

Type:MH=Male Housing
FH=Female Housing
S=Straight pin
FT=Female Terminal
MT=Male Terminal
R=Right pin

Pins: 1-Single layer 2-Double layer
Pin Number: 2~12Pin

PCB Connector Series

KLS1-XM1-3.00 Pitch=3.00mm TYPE

Electrical Specification:

Rated Voltage: 250V AC.DC
Rated Current: 3A
Contact Resistance: 0.015Ω max
Insulation Resistance: 1000MΩ min
Withstand voltage: 500V AC/MIN
Temperature range for usage : -40°C~+105°C



Material:

Housing: PA66 (PA66) UL94V-2
Contacts: Phosphor Bronze
Plating: Tin 50u" over 100u" nickel
Wire range : AWG#30~#22

Male Terminal

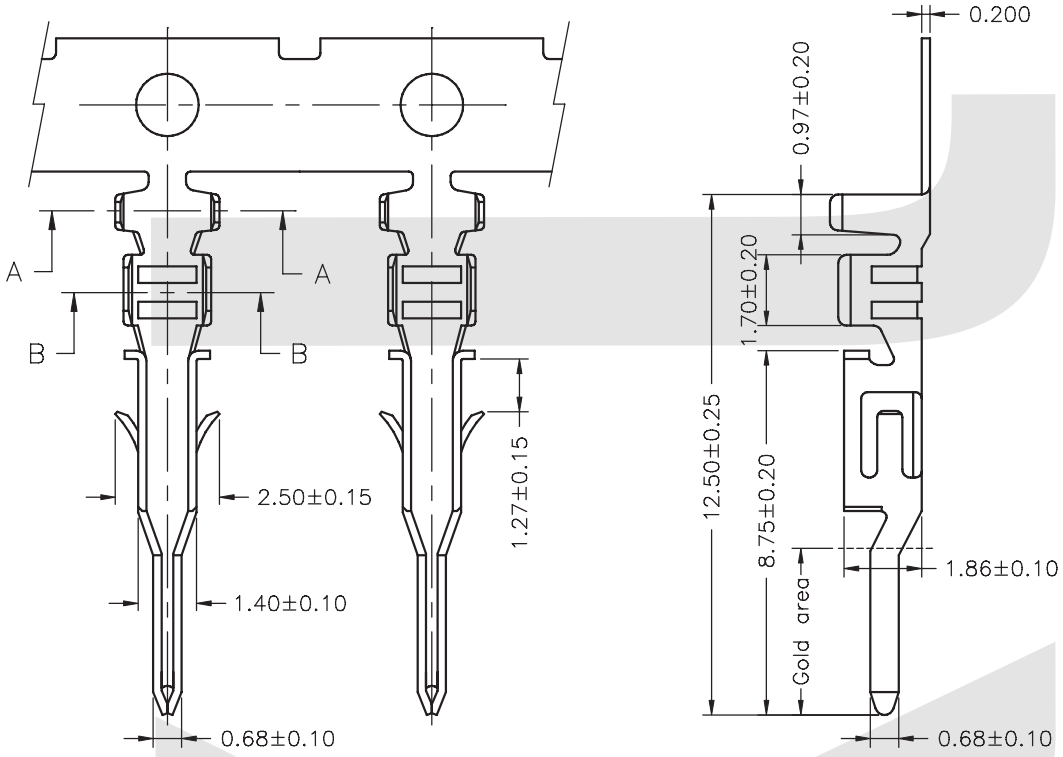

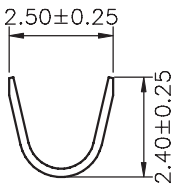

SEC:A–A

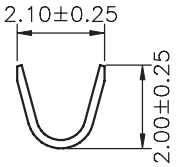

SEC:B–B

ORDER INFORMATION

Product NO.: KLS1-XM1-3.00 -MT

Series No.
Pitch: 3.00=3.00mm

Type:MH=Male Housing FT=Female Terminal
FH=Female Housing MT=Male Terminal
S=Straight pin R=Right pin

KLS electronic
www.cnkls.com

I

PCB Connector Series

KLS1-XM1-3.00 Pitch=3.00mm TYPE



Electrical Specification:

Rated Voltage: 250V AC.DC
Rated Current: 3A
Contact Resistance: 0.015Ω max
Insulation Resistance: 1000MΩ min
Withstand voltage: 500V AC/MIN
Temperature range for usage : -40°C~+105°C

Material:

Housing: PA66 (PA66) UL94V-2
Contacts: Phosphor Bronze
Plating: Tin 50u" over 100u" nickel
Wire range : AWG#30~#22

Female Terminal

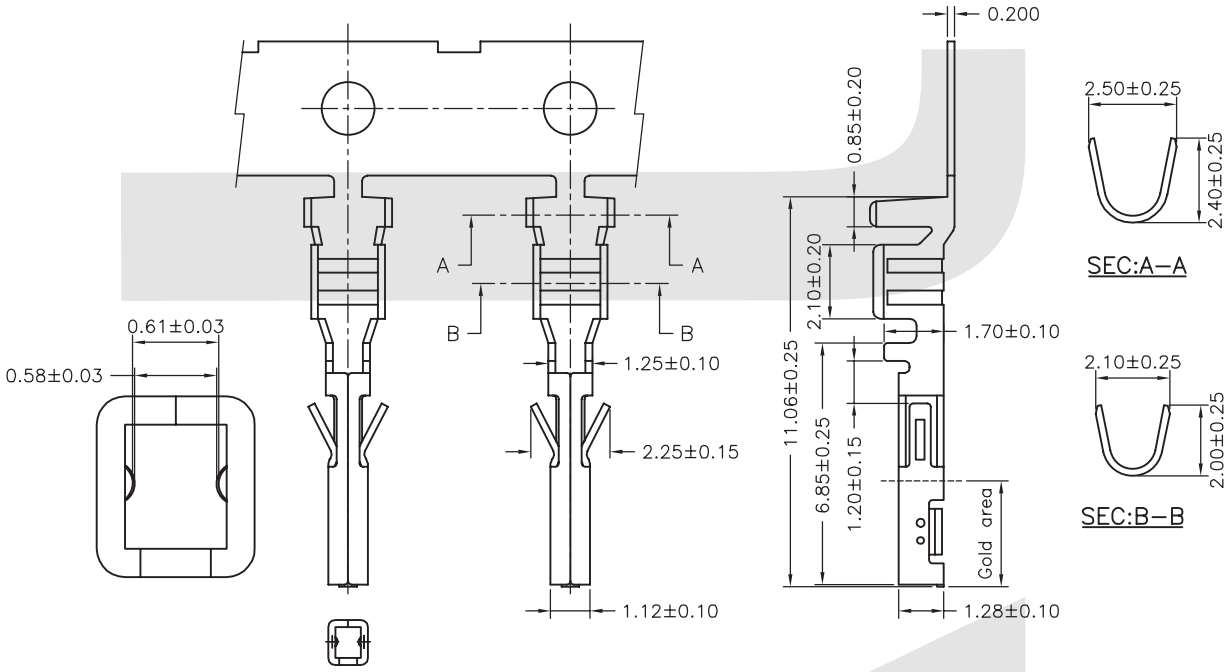

ORDER INFORMATION

Product NO.: KLS1-XM1-3.00 - FT

Series No.
Pitch: 3.00=3.00mm

Type: MH=Male Housing FT=Female Terminal
FH=Female Housing MT=Male Terminal
S=Straight pin R=Right pin

PCB Connector Series

KLS1-XM1-3.00 Pitch=3.00mm TYPE

Electrical Specification:

Rated Voltage: 250V AC.DC
Rated Current: 3A
Contact Resistance: 0.015Ω max
Insulation Resistance: 1000MΩ min
Withstand voltage: 500V AC/MIN
Temperature range for usage : -40°C~+105°C



Material:

Housing: PA66 (PA66) UL94V-2
Contacts: Brass
Plating: Tin 50u" over 100u" nickel

Single layer Straight pin

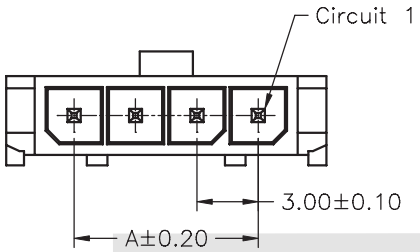

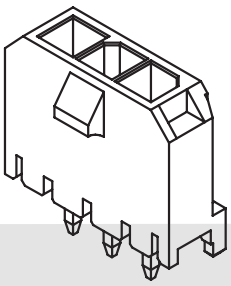

PART NO.	Dimensions	
	A	B
02	3.00	9.65
03	6.00	12.65
04	9.00	15.65
05	12.00	18.65
06	15.00	21.65
07	18.00	24.65
08	21.00	27.65
09	24.00	30.65
10	27.00	33.65
11	30.00	36.65
12	33.00	39.65

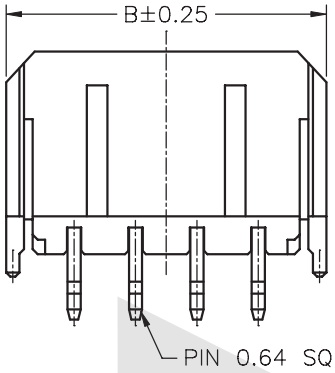

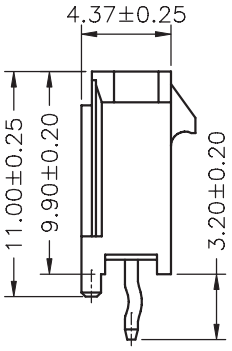

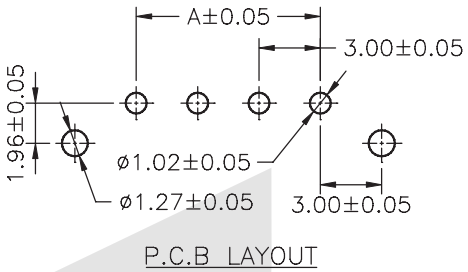

P.C.B LAYOUT

ORDER INFORMATION

Product NO.: KLS1-XM1-3.00 -1X04- S

Series No.
Pitch: 3.00=3.00mm

Type:MH=Male Housing FT=Female Terminal
FH=Female Housing MT=Male Terminal
S=Straight pin R=Right pin

Pins: 1-Single layer 2-Double layer
Pin Number: 2~12Pin

KLS electronic
www.cnkls.com

I

PCB Connector Series

KLS1-XM1-3.00 Pitch=3.00mm TYPE

Electrical Specification:

Rated Voltage: 250V AC.DC
Rated Current: 3A
Contact Resistance: 0.015Ω max
Insulation Resistance: 1000MΩ min
Withstand voltage: 500V AC/MIN
Temperature range for usage : -40°C~+105°C



Material:

Housing: PA66 (PA66) UL94V-2
Contacts: Brass
Plating: Tin 50u" over 100u" nickel

Double layer Straight pin

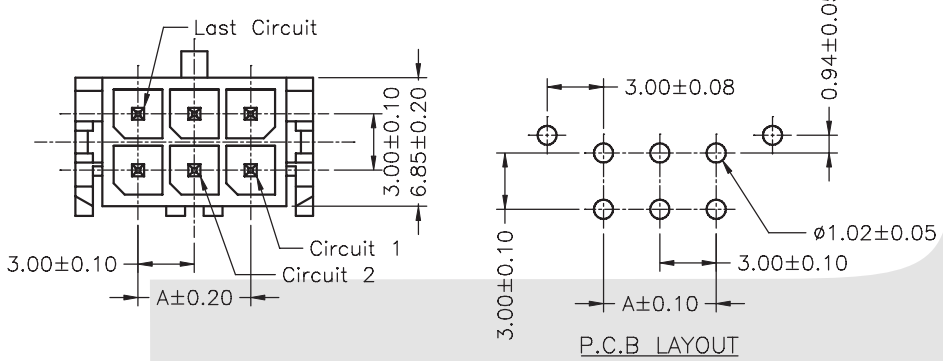

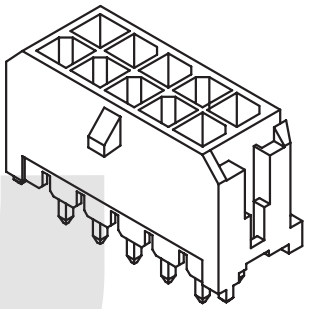

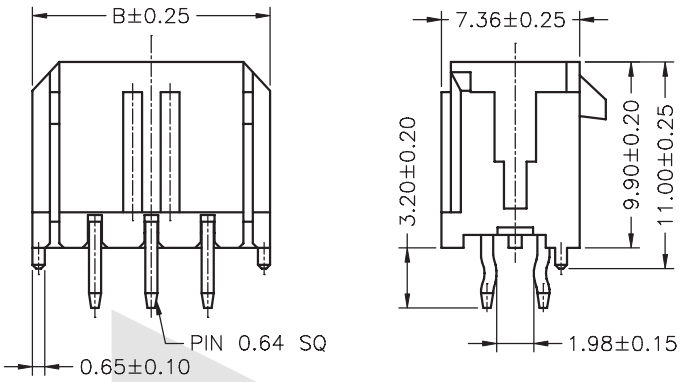

PART NO.	Dimensions	
	A	B
2X01	---	6.65
2X02	3.00	9.65
2X03	6.00	12.65
2X04	9.00	15.65
2X05	12.00	18.65
2X06	15.00	21.65
2X07	18.00	24.65
2X08	21.00	27.65
2X09	24.00	30.65
2X10	27.00	33.65
2X11	30.00	36.65
2X12	33.00	39.65

ORDER INFORMATION

Product NO.: KLS1-XM1-3.00 -2X04- S

Series No.
Pitch: 3.00=3.00mm
Pins: 1-Single layer 2-Double layer
Pin Number: 2~12Pin
Type:MH=Male Housing FT=Female Terminal
FH=Female Housing MT=Male Terminal
S=Straight pin R=Right pin

PCB Connector Series

I

KLS1-XM1-3.00 Pitch=3.00mm TYPE

Electrical Specification:

Rated Voltage: 250V AC.DC
Rated Current: 3A
Contact Resistance: 0.015Ω max
Insulation Resistance: 1000MΩ min
Withstand voltage: 500V AC/MIN
Temperature range for usage : -40°C~+105°C



Material:

Housing: PA66 (PA66) UL94V-2
Contacts: Brass
Plating: Tin 50u" over 100u" nickel

Single layer Right pin

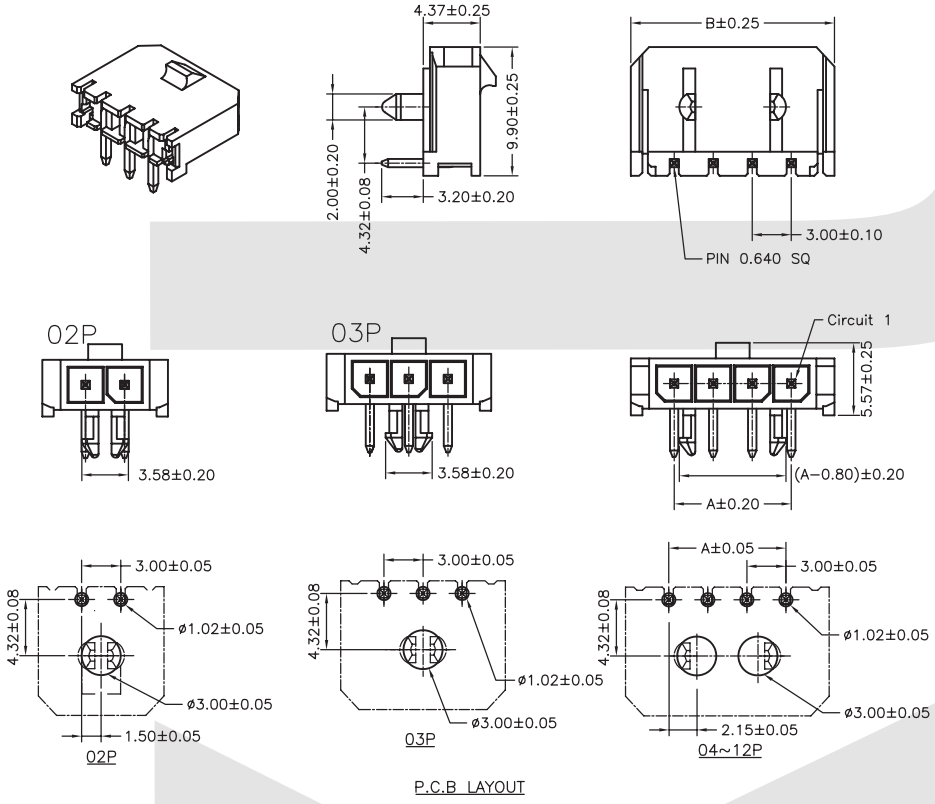

PART NO.	Dimensions	
	A	B
02	3.00	9.65
03	6.00	12.65
04	9.00	15.65
05	12.00	18.65
06	15.00	21.65
07	18.00	24.65
08	21.00	27.65
09	24.00	30.65
10	27.00	33.65
11	30.00	36.65
12	33.00	39.65

ORDER INFORMATION

Product NO.: KLS1-XM1-3.00 -1X04- R

Series No.
Pitch: 3.00=3.00mm
Pins: 1-Single layer 2-Double layer
Pin Number: 2~12Pin
Type:MH=Male Housing FT=Female Terminal
FH=Female Housing MT=Male Terminal
S=Straight pin R=Right pin

I

PCB Connector Series

KLS1-XM1-3.00 Pitch=3.00mm TYPE

Electrical Specification:

Rated Voltage: 250V AC.DC
Rated Current: 3A
Contact Resistance: 0.015Ω max
Insulation Resistance: 1000MΩ min
Withstand voltage: 500V AC/MIN
Temperature range for usage : -40°C~+105°C



Material:

Housing: PA66 (PA66) UL94V-2
Contacts: Brass
Plating: Tin 50u" over 100u" nickel

Double layer Right pin

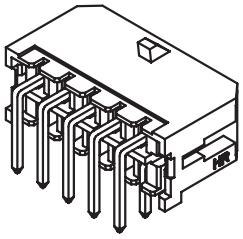

PART NO.	Dimensions	
	A	B
2X01	---	6.65
2X02	3.00	9.65
2X03	6.00	12.65
2X04	9.00	15.65
2X05	12.00	18.65
2X06	15.00	21.65
2X07	18.00	24.65
2X08	21.00	27.65
2X09	24.00	30.65
2X10	27.00	33.65
2X11	30.00	36.65
2X12	33.00	39.65

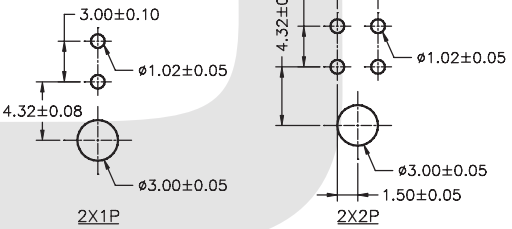

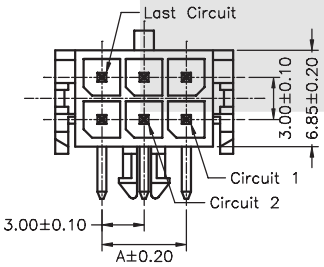

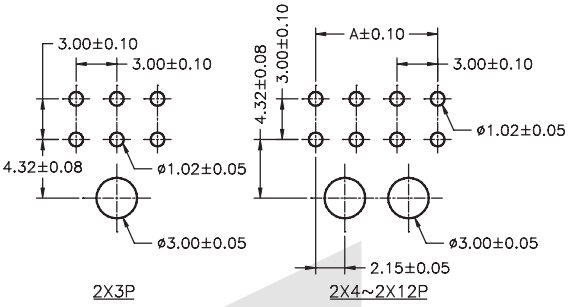

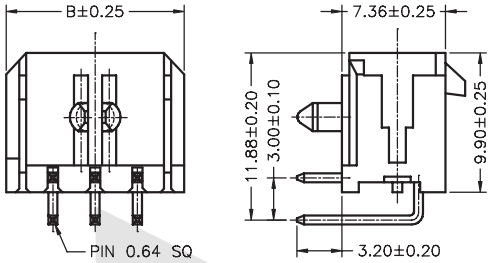

P.C.B LAYOUT

ORDER INFORMATION

Product NO.: KLS1-XM1-3.00 -2X04- R

Series No.
Pitch: 3.00=3.00mm

Type:MH=Male Housing FT=Female Terminal
FH=Female Housing MT=Male Terminal
S=Straight pin R=Right pin

Pins: 1-Single layer 2-Double layer
Pin Number: 2~12Pin

I

PCB Connector Series

KLS1-4.20 Pitch=4.20mm TYPE

Electrical Specification:

Rated Voltage: 300V AC.DC
Rated Current: 9A
Contact Resistance: 0.015Ω max
Insulation Resistance: 1000MΩ min
Withstand voltage: 1500V AC/MIN
Temperature range for usage : -40°C~+105°C

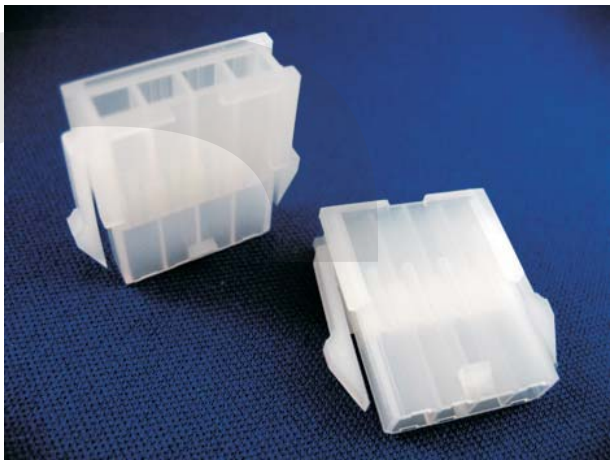

Material:

Housing: PA66 (PA66) UL94V-2
Contacts: Phosphor Bronze
Plating: Tin 50u" over 100u" nickel
Wire range : AWG#30~#22

Single layer Female Housing

PART NO.	Dimensions	
	A	B
02	4.20	9.60
03	8.40	13.80
04	12.60	18.00
05	16.80	22.20

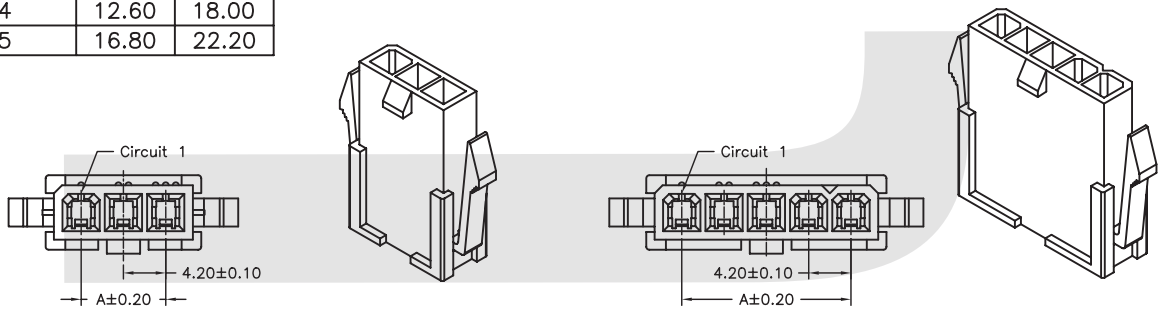

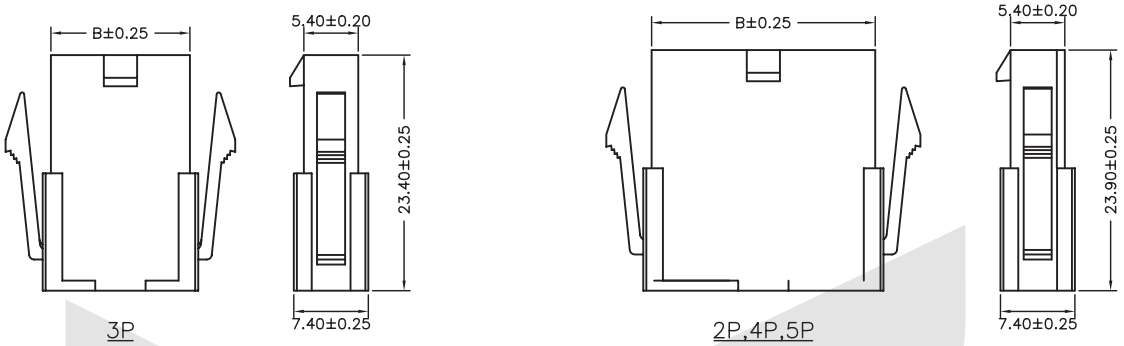

ORDER INFORMATION

Product NO.: KLS1-4.20 -1X05-FH

Pitch: 4.20=4.20mm
Pins: 1-Single layer 2-Double layer
Pin Number: 2~12Pin

Type:MH=Male Housing FT=Female Terminal
FH=Female Housing MT=Male Terminal
S=Straight pin R=Right pin
SW=Straight pin with Peg RW=Right pin with Peg
SB=Straight pin Special Type RB=Right pin with Ears

I

PCB Connector Series

KLS1-4.20 Pitch=4.20mm TYPE

Electrical Specification:

Rated Voltage: 300V AC.DC
Rated Current: 9A
Contact Resistance: 0.015Ω max
Insulation Resistance: 1000MΩ min
Withstand voltage: 1500V AC/MIN
Temperature range for usage : -40°C~+105°C

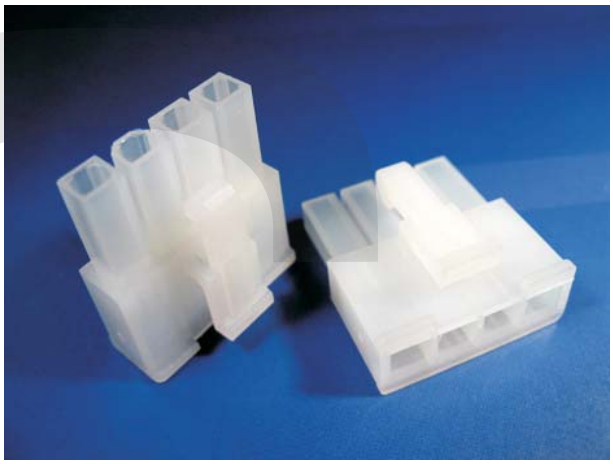

Material:

Housing: PA66 (PA66) UL94V-2
Contacts: Phosphor Bronze
Plating: Tin 50u" over 100u" nickel
Wire range : AWG#30~#22

Single layer Male Housing

PART NO.	Dimensions	
	A	B
02	4.20	9.60
03	8.40	13.80
04	12.60	18.00
05	16.80	22.20

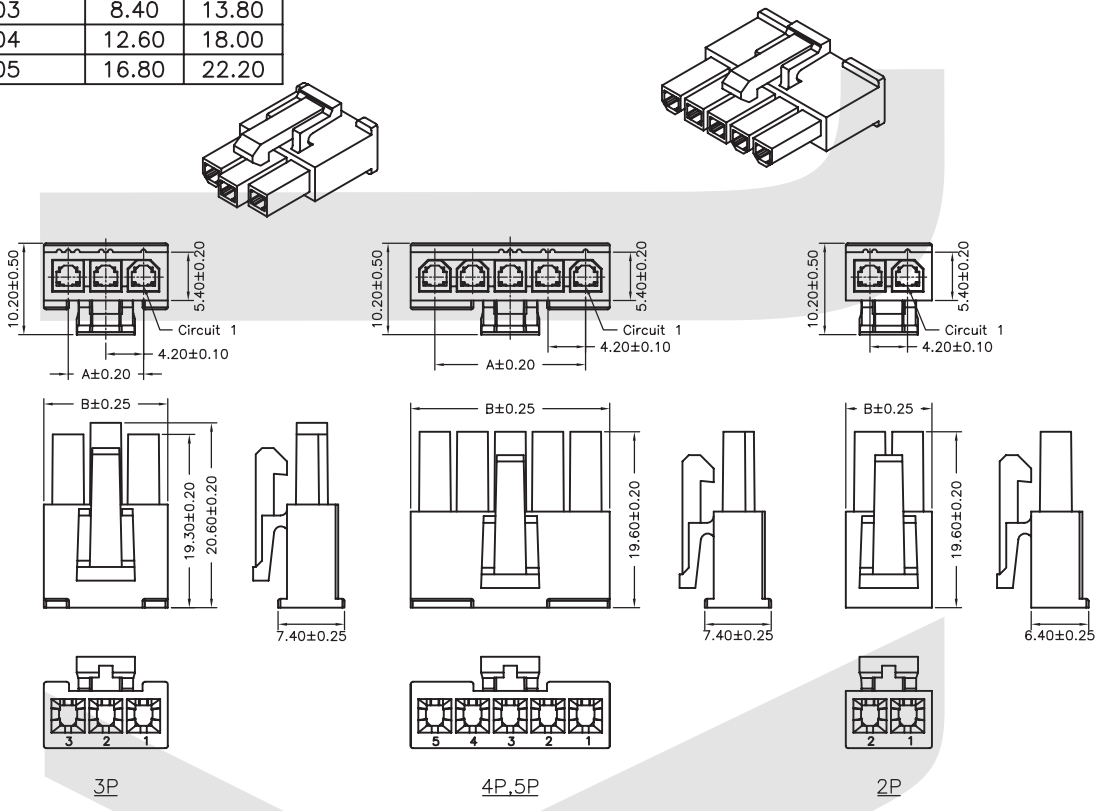

ORDER INFORMATION

Product NO.: KLS1-4.20 -1X05- MH

Pitch: 4.20=4.20mm
Pins: 1-Single layer 2-Double layer
Pin Number: 2~12Pin

Type:MH=Male Housing FT=Female Terminal
FH=Female Housing MT=Male Terminal
S=Straight pin R=Right pin
SW=Straight pin with Peg RW=Right pin with Peg
SB=Straight pin Special Type RB=Right pin with Ears

I

PCB Connector Series

KLS1-4.20 Pitch=4.20mm TYPE

Electrical Specification:

Rated Voltage: 300V AC.DC
Rated Current: 9A
Contact Resistance: 0.015Ω max
Insulation Resistance: 1000MΩ min
Withstand voltage: 1500V AC/MIN
Temperature range for usage : -40°C~+105°C



Material:

Housing: PA66 (PA66) UL94V-2
Contacts: Phosphor Bronze
Plating: Tin 50u" over 100u" nickel
Wire range : AWG#30~#22

Double layer Female Housing

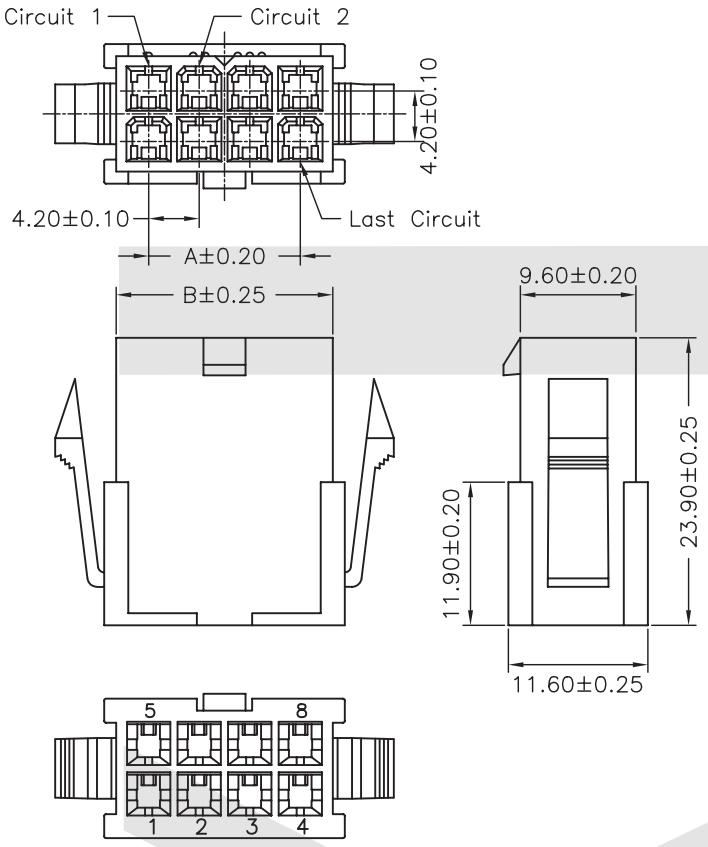

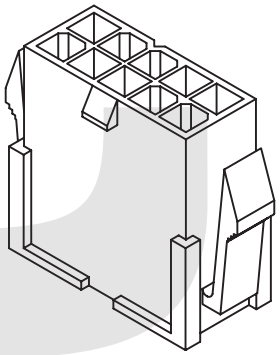

PART NO.	Dimensions	
	A	B
2X01	---	5.40
2X02	4.20	9.60
2X03	8.40	13.80
2X04	12.60	18.00
2X05	16.80	22.20
2X06	21.00	26.40
2X07	25.20	30.60
2X08	29.40	34.80
2X09	33.60	39.00
2X10	37.80	43.20
2X11	42.00	47.40
2X12	46.20	51.60

ORDER INFORMATION

Product NO.: KLS1-4.20 -2X05-FH

Pitch: 4.20=4.20mm
Pins: 1-Single layer 2-Double layer
Pin Number: 2~12Pin

Type:MH=Male Housing FT=Female Terminal
FH=Female Housing MT=Male Terminal
S=Straight pin R=Right pin
SW=Straight pin with Peg RW=Right pin with Peg
SB=Straight pin Special Type RB=Right pin with Ears

PCB Connector Series

KLS1-4.20 Pitch=4.20mm TYPE

Electrical Specification:

Rated Voltage: 300V AC.DC
Rated Current: 9A
Contact Resistance: 0.015Ω max
Insulation Resistance: 1000MΩ min
Withstand voltage: 1500V AC/MIN
Temperature range for usage : -40°C~+105°C

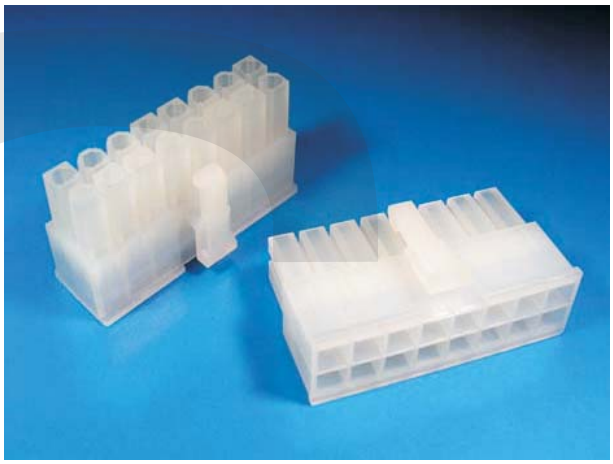

Material:

Housing: PA66 (PA66) UL94V-2
Contacts: Phosphor Bronze
Plating: Tin 50u" over 100u" nickel
Wire range : AWG#30~#22

Double layer Male Housing

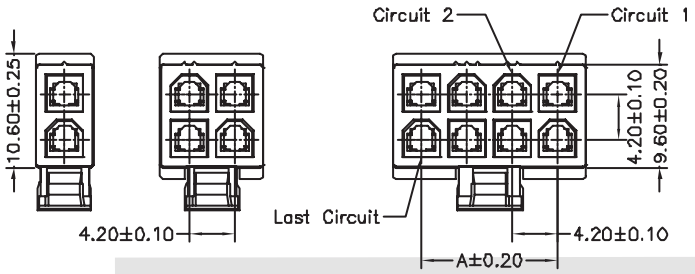

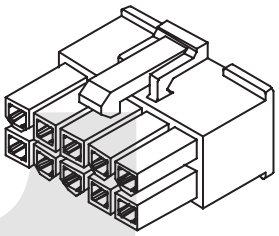

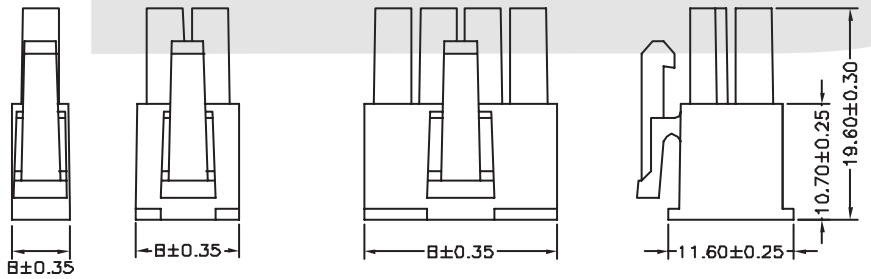

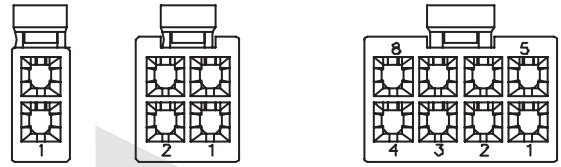

2X01P 2X02P

PART NO.	Dimensions	
	A	B
2X01	---	5.70
2X02	4.20	9.60
2X03	8.40	13.80
2X04	12.60	18.00
2X05	16.80	22.20
2X06	21.00	26.40
2X07	25.20	30.60
2X08	29.40	34.80
2X09	33.60	39.00
2X10	37.80	43.20
2X11	42.00	47.40
2X12	46.20	51.60

ORDER INFORMATION

Product NO.: KLS1-4.20 -2X05- MH

Pitch: 4.20=4.20mm
Pins: 1-Single layer 2-Double layer
Pin Number: 2~12Pin

Type: MH=Male Housing FT=Female Terminal
FH=Female Housing MT=Male Terminal
S=Straight pin R=Right pin
SW=Straight pin with Peg RW=Right pin with Peg
SB=Straight pin Special Type RB=Right pin with Ears

I

PCB Connector Series

KLS1-4.20 Pitch=4.20mm TYPE

Electrical Specification:

Rated Voltage: 300V AC.DC
Rated Current: 9A
Contact Resistance: 0.015Ω max
Insulation Resistance: 1000MΩ min
Withstand voltage: 1500V AC/MIN
Temperature range for usage : -40°C~+105°C

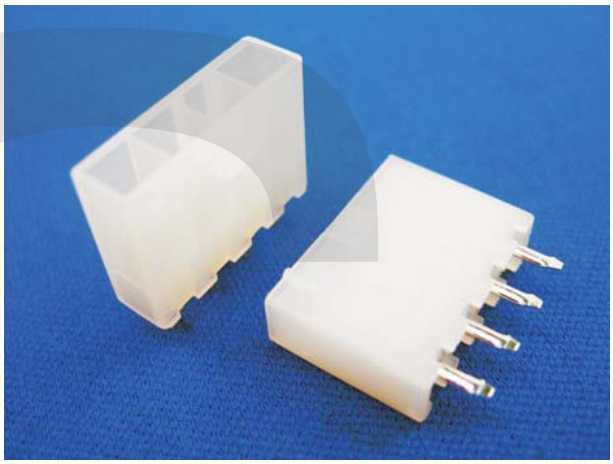

Material:

Housing: PA66 (PA66) UL94V-2
Contacts: Brass
Plating: Tin 50u" over 100u" nickel
Wire range : AWG#30~#22

Single layer Straight pin

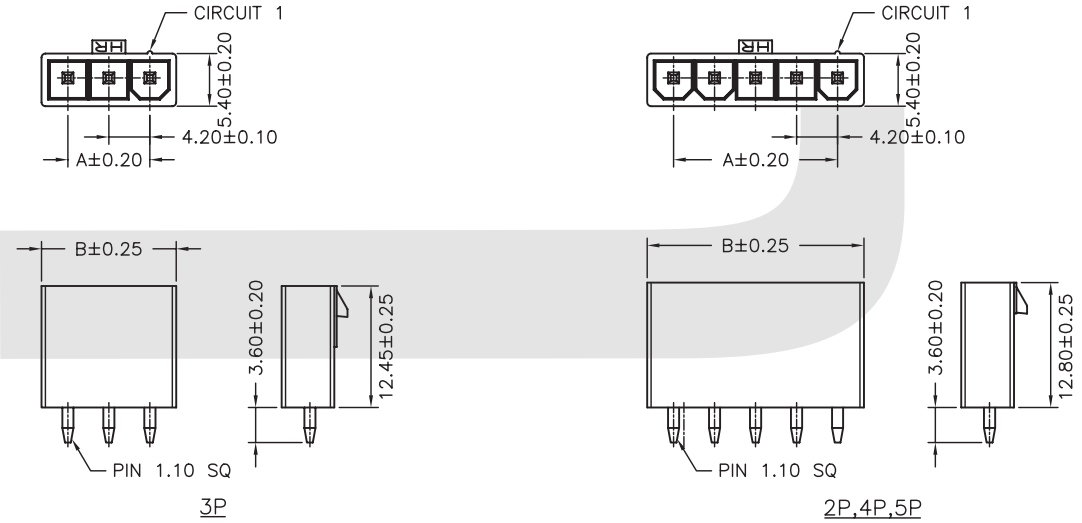

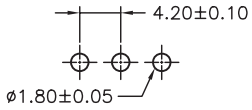

P.C.B LAYOUT

PART NO.	Dimensions	
	A	B
02	4.20	9.60
03	8.40	13.80
04	12.60	18.00
05	16.80	22.20

ORDER INFORMATION

Product NO.: KLS1-4.20 -1X05- S

Pitch: 4.20=4.20mm
Pins: 1-Single layer 2-Double layer
Pin Number: 2~12Pin

Type:MH=Male Housing FT=Female Terminal
FH=Female Housing MT=Male Terminal
S=Straight pin R=Right pin
SW=Straight pin with Peg RW=Right pin with Peg
SB=Straight pin Special Type RB=Right pin with Ears

KLS electronic
www.cnkls.com

I

PCB Connector Series

KLS1-4.20 Pitch=4.20mm TYPE

Electrical Specification:

Rated Voltage: 300V AC.DC
Rated Current: 9A
Contact Resistance: 0.015Ω max
Insulation Resistance: 1000MΩ min
Withstand voltage: 1500V AC/MIN
Temperature range for usage : -40°C~+105°C

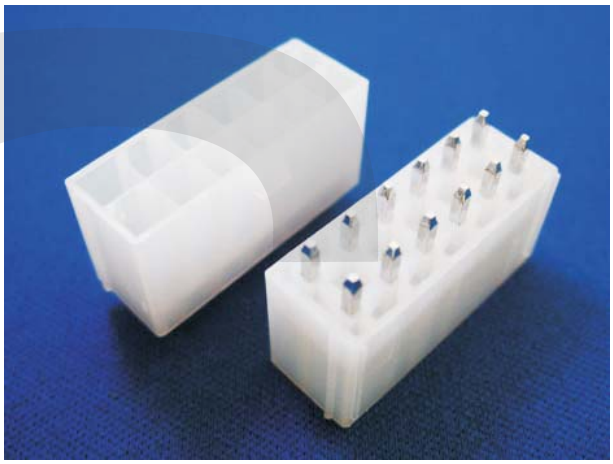

Material:

Housing: PA66 (PA66) UL94V-2
Contacts: Brass
Plating: Tin 50u" over 100u" nickel
Wire range : AWG#30~#22

Double layer Straight pin

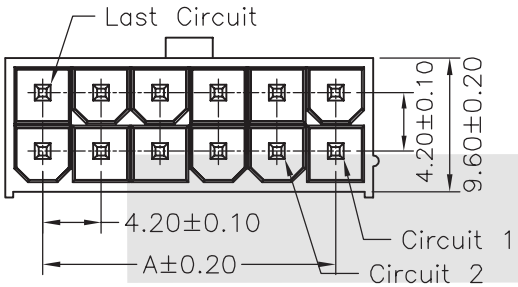

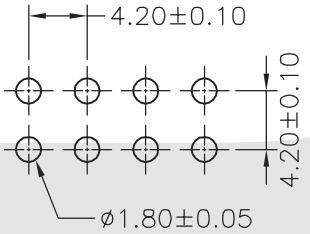

P.C.B LAYOUT

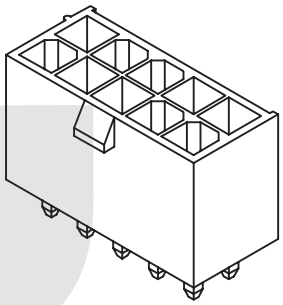

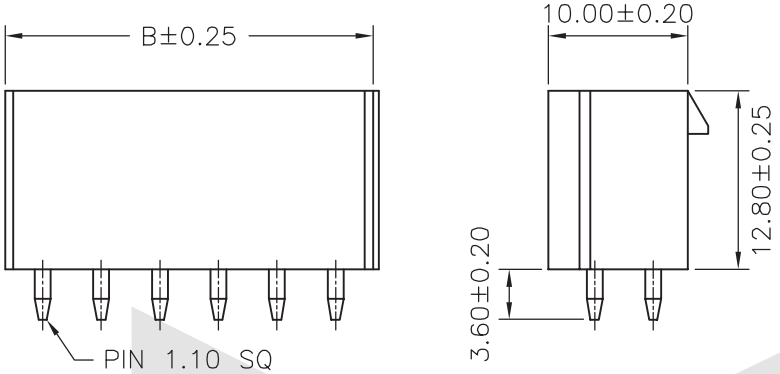

PART NO.	Dimensions	
	A	B
2X01	---	5.40
2X02	4.20	9.60
2X03	8.40	13.80
2X04	12.60	18.00
2X05	16.80	22.20
2X06	21.00	26.40
2X07	25.20	30.60
2X08	29.40	34.80
2X09	33.60	39.00
2X10	37.80	43.20
2X11	42.00	47.40
2X12	46.20	51.60

ORDER INFORMATION

Product NO.: KLS1-4.20 -2X05- S

Pitch: 4.20=4.20mm
Pins: 1-Single layer 2-Double layer
Pin Number: 2~12Pin

Type:MH=Male Housing FT=Female Terminal
FH=Female Housing MT=Male Terminal
S=Straight pin R=Right pin
SW=Straight pin with Peg RW=Right pin with Peg
SB=Straight pin Special Type RB=Right pin with Ears

I

PCB Connector Series

KLS1-4.20 Pitch=4.20mm TYPE

Electrical Specification:

Rated Voltage: 300V AC.DC
Rated Current: 9A
Contact Resistance: 0.015Ω max
Insulation Resistance: 1000MΩ min
Withstand voltage: 1500V AC/MIN
Temperature range for usage : -40°C~+105°C

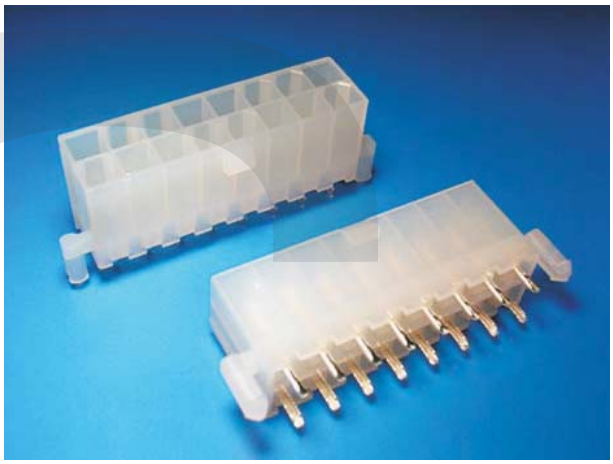

Material:

Housing: PA66 (PA66) UL94V-2
Contacts: Brass
Plating: Tin 50u" over 100u" nickel
Wire range : AWG#30~#22

Double layer Straight pin With Peg

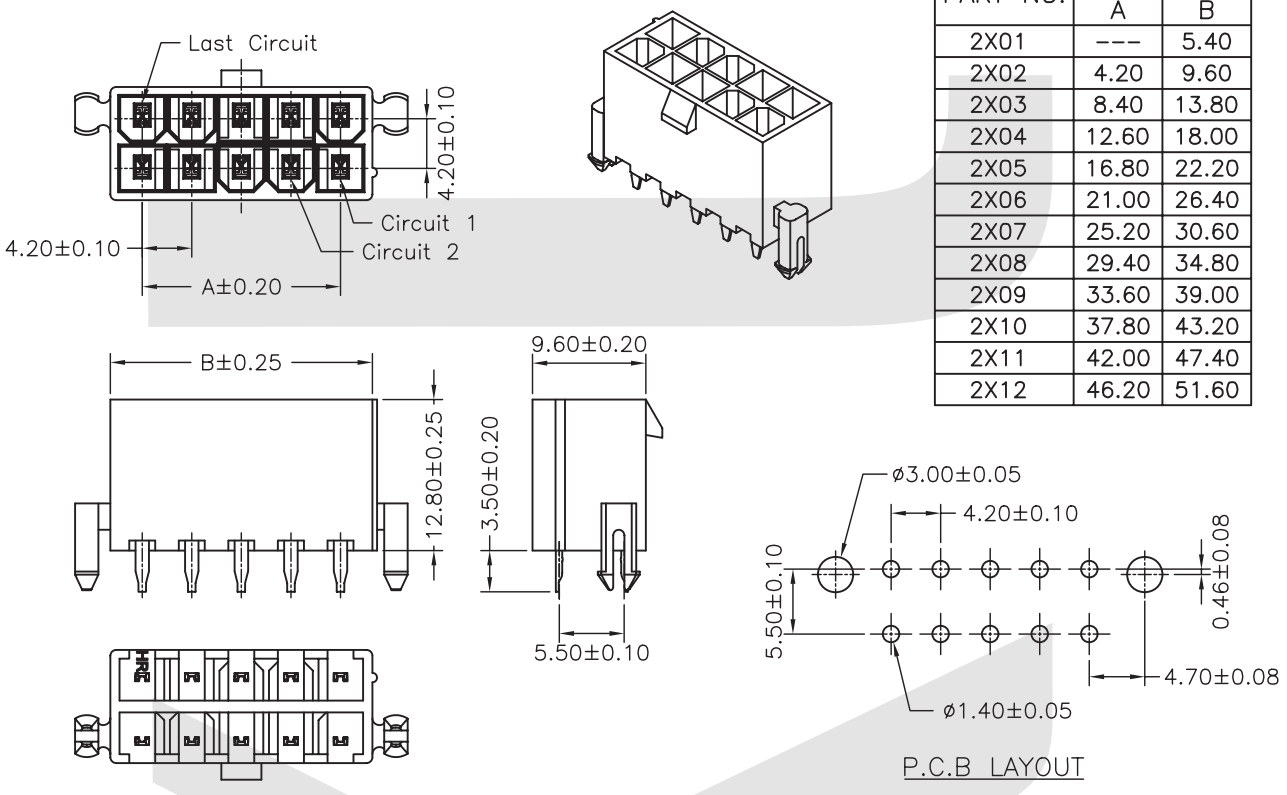

PART NO.	Dimensions	
	A	B
2X01	---	5.40
2X02	4.20	9.60
2X03	8.40	13.80
2X04	12.60	18.00
2X05	16.80	22.20
2X06	21.00	26.40
2X07	25.20	30.60
2X08	29.40	34.80
2X09	33.60	39.00
2X10	37.80	43.20
2X11	42.00	47.40
2X12	46.20	51.60

ORDER INFORMATION

Product NO.: KLS1-4.20 -2X05-SW

Pitch: 4.20=4.20mm
Pins: 1-Single layer 2-Double layer
Pin Number: 2~12Pin

Type:MH=Male Housing FT=Female Terminal
FH=Female Housing MT=Male Terminal
S=Straight pin R=Right pin
SW=Straight pin with Peg RW=Right pin with Peg
SB=Straight pin Special Type RB=Right pin with Ears

I

PCB Connector Series

KLS1-4.20 Pitch=4.20mm TYPE

Electrical Specification:

Rated Voltage: 300V AC.DC
Rated Current: 9A
Contact Resistance: 0.015Ω max
Insulation Resistance: 1000MΩ min
Withstand voltage: 1500V AC/MIN
Temperature range for usage : -40°C~+105°C

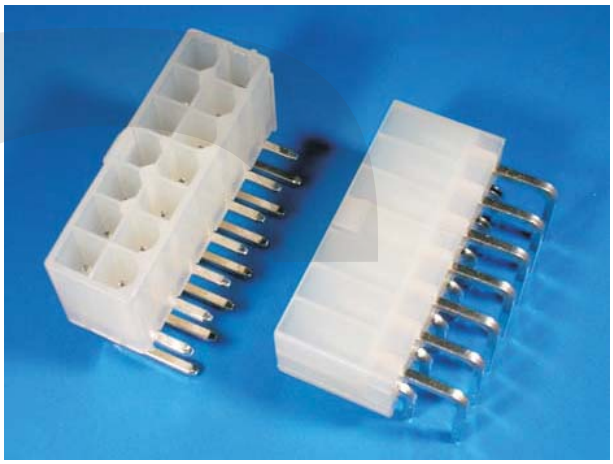

Material:

Housing: PA66 (PA66) UL94V-2
Contacts:Brass
Plating: Tin 50u" over 100u" nickel
Wire range : AWG#30~#22

Double layer Right pin

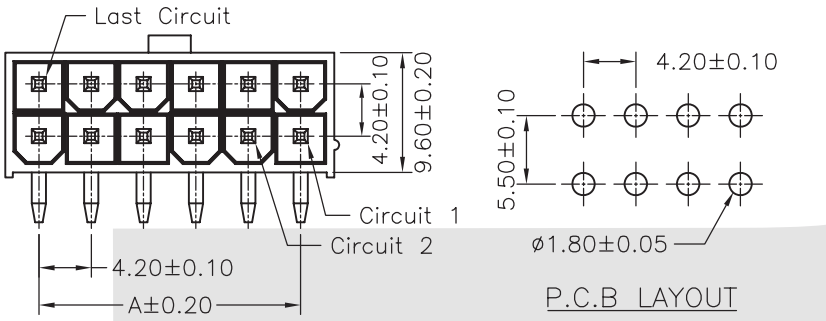

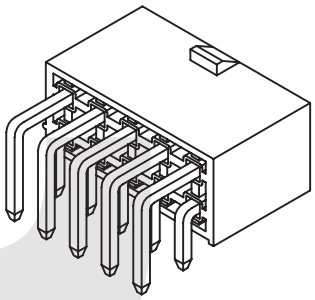

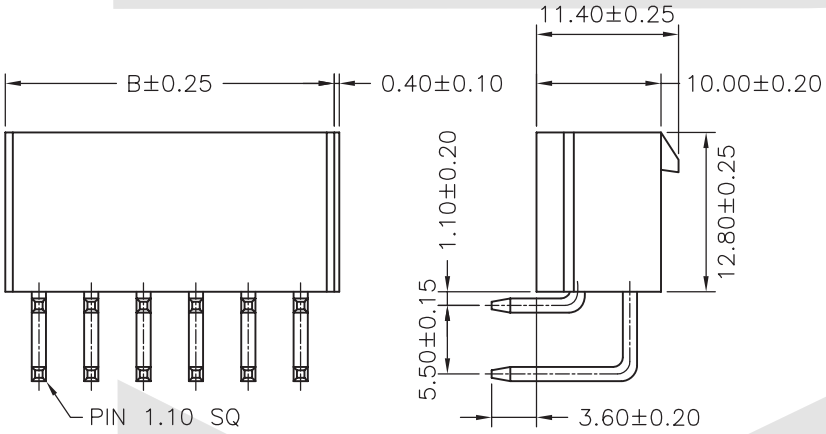

PART NO.	Dimensions	
	A	B
2X01	---	5.40
2X02	4.20	9.60
2X03	8.40	13.80
2X04	12.60	18.00
2X05	16.80	22.20
2X06	21.00	26.40
2X07	25.20	30.60
2X08	29.40	34.80
2X09	33.60	39.00
2X10	37.80	43.20
2X11	42.00	47.40
2X12	46.20	51.60

ORDER INFORMATION

Product NO.: KLS1-4.20 -2X05- R

Type:MH=Male Housing FT=Female Terminal
FH=Female Housing MT=Male Terminal
S=Straight pin R=Right pin
SW=Straight pin with Peg RW=Right pin with Peg
SB=Straight pin Special Type RB=Right pin with Ears

Pitch: 4.20=4.20mm
Pins: 1-Single layer 2-Double layer
Pin Number: 2~12Pin

I

PCB Connector Series

KLS1-4.20 Pitch=4.20mm TYPE

Electrical Specification:

Rated Voltage: 300V AC.DC
Rated Current: 9A
Contact Resistance: 0.015Ω max
Insulation Resistance: 1000MΩ min
Withstand voltage: 1500V AC/MIN
Temperature range for usage : -40°C~+105°C

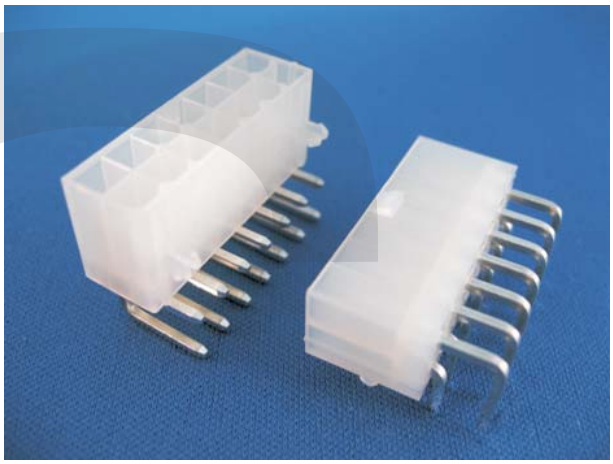

Material:

Housing: PA66 (PA66) UL94V-2
Contacts: Brass
Plating: Tin 50u" over 100u" nickel
Wire range : AWG#30~#22

Double layer Right pin With Peg

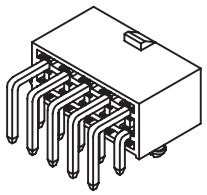

PART NO.	Dimensions	
	A	B
2X01	---	5.40
2X02	4.20	9.60
2X03	8.40	13.80
2X04	12.60	18.00
2X05	16.80	22.20
2X06	21.00	26.40
2X07	25.20	30.60
2X08	29.40	34.80
2X09	33.60	39.00
2X10	37.80	43.20
2X11	42.00	47.40
2X12	46.20	51.60

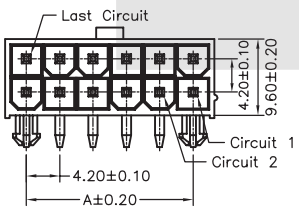

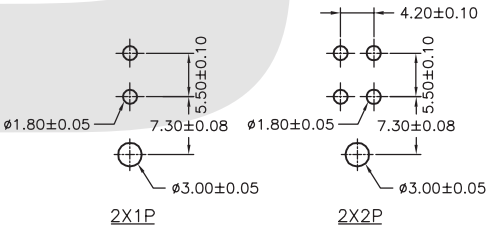

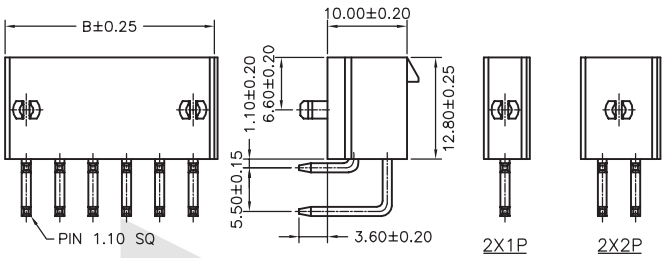

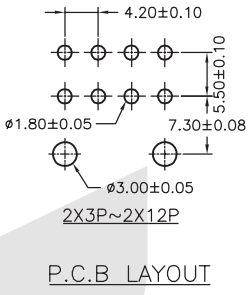

ORDER INFORMATION

Product NO.: KLS1-4.20 -2X05-RW

Pitch: 4.20=4.20mm
Pins: 1-Single layer 2-Double layer
Pin Number: 2~12Pin

Type:MH=Male Housing FT=Female Terminal
FH=Female Housing MT=Male Terminal
S=Straight pin R=Right pin
SW=Straight pin with Peg RW=Right pin with Peg
SB=Straight pin Special Type RB=Right pin with Ears

I

PCB Connector Series

KLS1-4.20 Pitch=4.20mm TYPE

Electrical Specification:

Rated Voltage: 300V AC.DC
Rated Current: 9A
Contact Resistance: 0.015Ω max
Insulation Resistance: 1000MΩ min
Withstand voltage: 1500V AC/MIN
Temperature range for usage : -40°C~+105°C

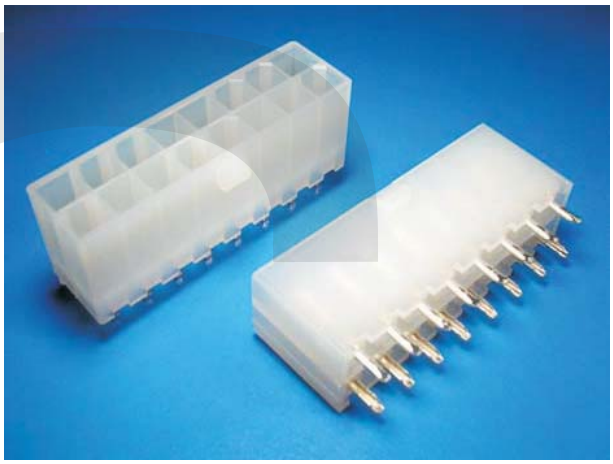

Material:

Housing: PA66 (PA66) UL94V-2
Contacts: Brass
Plating: Tin 50u" over 100u" nickel
Wire range : AWG#30~#22

Double layer Straight pin

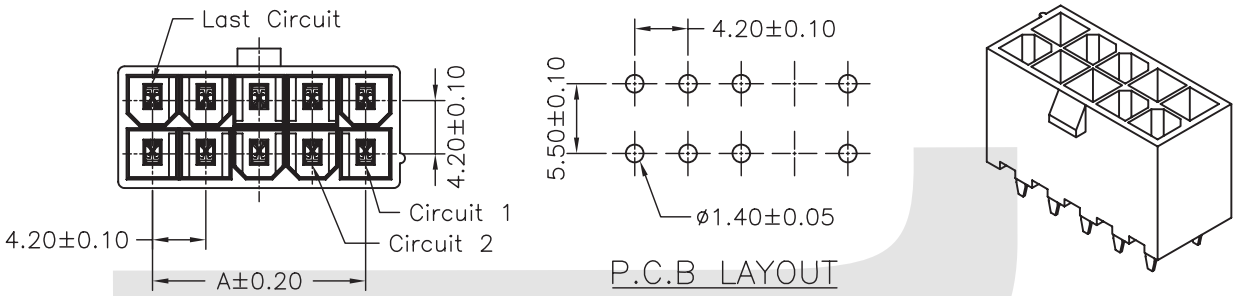

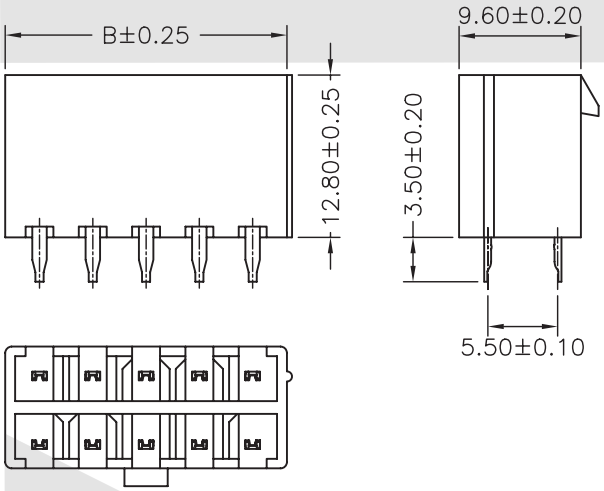

PART NO.	Dimensions	
	A	B
2X01	---	5.40
2X02	4.20	9.60
2X03	8.40	13.80
2X04	12.60	18.00
2X05	16.80	22.20
2X06	21.00	26.40
2X07	25.20	30.60
2X08	29.40	34.80
2X09	33.60	39.00
2X10	37.80	43.20
2X11	42.00	47.40
2X12	46.20	51.60

ORDER INFORMATION

Product NO.: KLS1-4.20 -2X05-SB

Pitch: 4.20=4.20mm
Pins: 1-Single layer 2-Double layer
Pin Number: 2~12Pin

Type:MH=Male Housing FT=Female Terminal
FH=Female Housing MT=Male Terminal
S=Straight pin R=Right pin
SW=Straight pin with Peg RW=Right pin with Peg
SB=Straight pin Special Type RB=Right pin with Ears

PCB Connector Series

KLS1-4.20 Pitch=4.20mm TYPE

Electrical Specification:

Rated Voltage: 300V AC.DC
Rated Current: 9A
Contact Resistance: 0.015Ω max
Insulation Resistance: 1000MΩ min
Withstand voltage: 1500V AC/MIN
Temperature range for usage : -40°C~+105°C

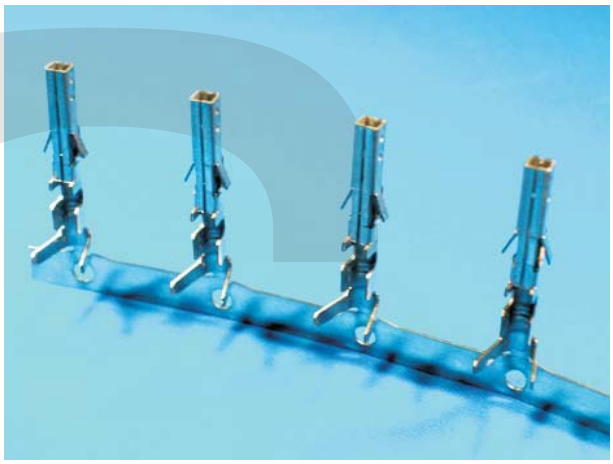

Material:

Housing: PA66 (PA66) UL94V-2
Contacts: Brass
Plating: Tin 50u" over 100u" nickel
Wire range : AWG#30~#22

Female Terminal

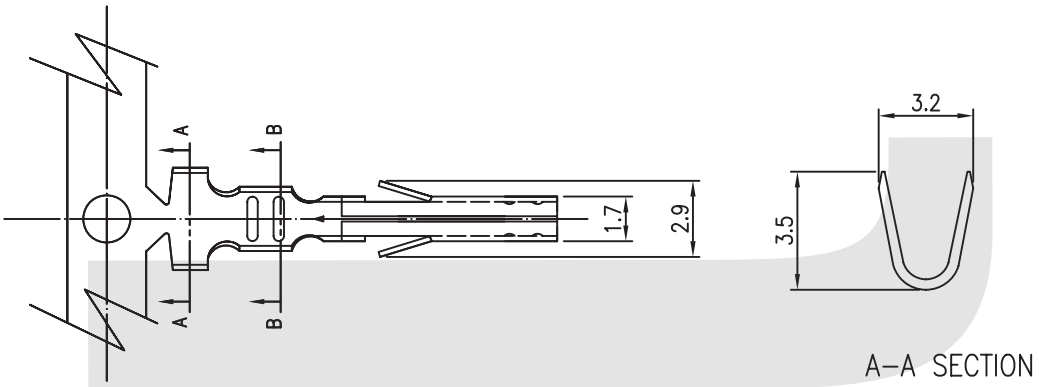

A–A SECTION

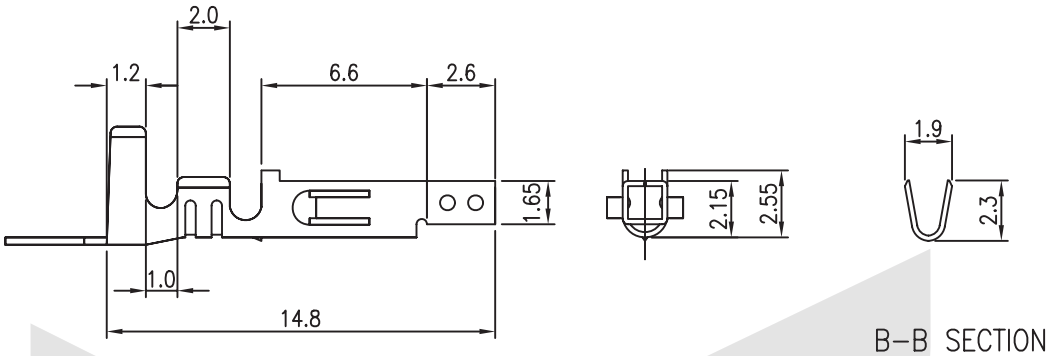

B–B SECTION

ORDER INFORMATION

Product NO.: KLS1-4.20 -FT

Pitch: 4.20=4.20mm

Type: MH=Male Housing FT=Female Terminal
FH=Female Housing MT=Male Terminal
S=Straight pin R=Right pin
SW=Straight pin with Peg RW=Right pin with Peg
SB=Straight pin Special Type RB=Right pin with Ears

PCB Connector Series

KLS1-4.20 Pitch=4.20mm TYPE

Electrical Specification:

Rated Voltage: 300V AC.DC
Rated Current: 9A
Contact Resistance: 0.015Ω max
Insulation Resistance: 1000MΩ min
Withstand voltage: 1500V AC/MIN
Temperature range for usage : -40°C~+105°C



Material:

Housing: PA66 (PA66) UL94V-2
Contacts: Brass
Plating: Tin 50u" over 100u" nickel
Wire range : AWG#30~#22

Male Terminal

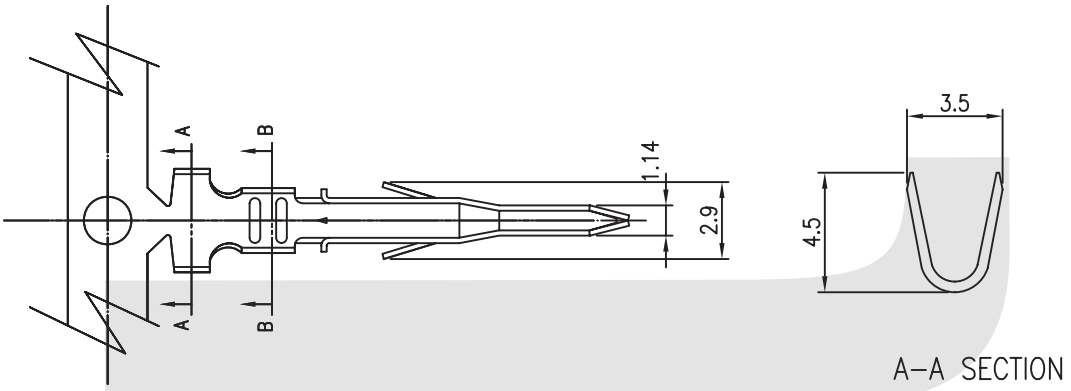

A–A SECTION

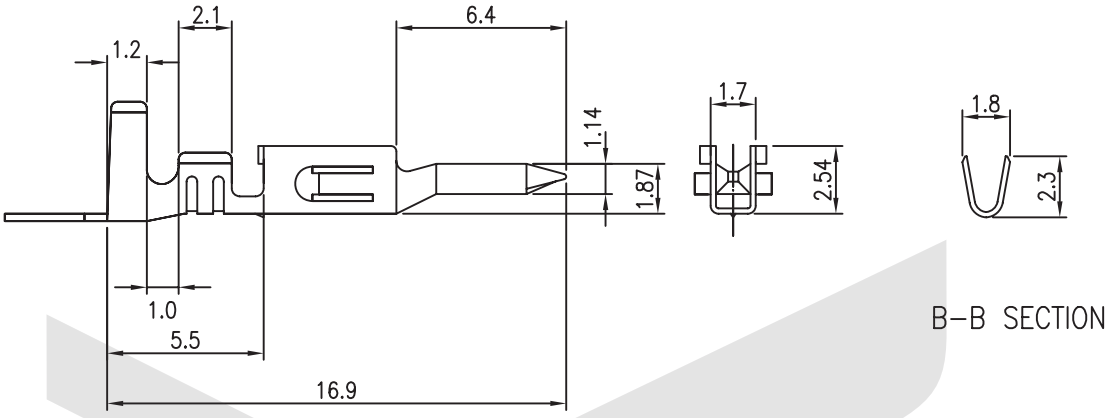

B–B SECTION

ORDER INFORMATION

Product NO.: KLS1-4.20 -MT

Pitch: 4.20=4.20mm

Type: MH=Male Housing FT=Female Terminal
FH=Female Housing MT=Male Terminal
S=Straight pin R=Right pin
SW=Straight pin with Peg RW=Right pin with Peg
SB=Straight pin Special Type RB=Right pin with Ears

I

PCB Connector Series

KLS1-4.20 Pitch=4.20mm TYPE

Electrical Specification:

Rated Voltage: 300V AC.DC
Rated Current: 9A
Contact Resistance: 0.015Ω max
Insulation Resistance: 1000MΩ min
Withstand voltage: 1500V AC/MIN
Temperature range for usage : -40°C~+105°C

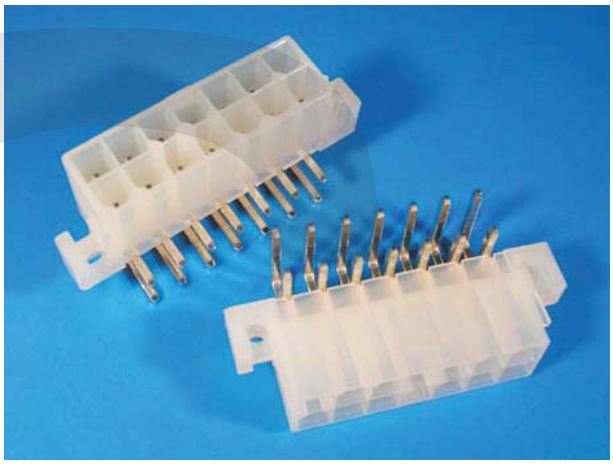

Material:

Housing: PA66 (PA66) UL94V-2
Contacts: Brass
Plating: Tin 50u" over 100u" nickel
Wire range : AWG#30~#22

Double layer Right pin With Peg

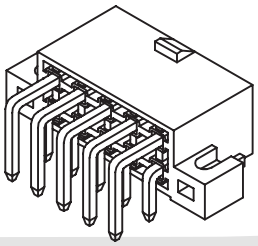

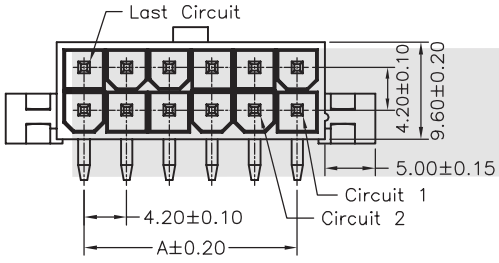

PART NO.	Dimensions	
	A	B
2X01	---	5.40
2X02	4.20	9.60
2X03	8.40	13.80
2X04	12.60	18.00
2X05	16.80	22.20
2X06	21.00	26.40
2X07	25.20	30.60
2X08	29.40	34.80
2X09	33.60	39.00
2X10	37.80	43.20
2X11	42.00	47.40
2X12	46.20	51.60

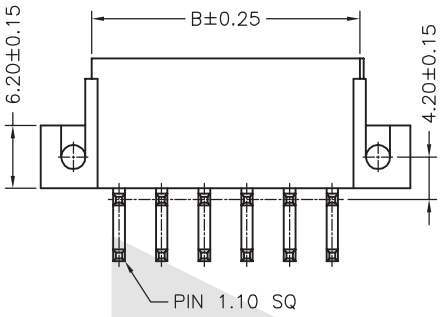

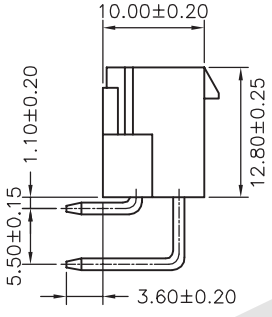

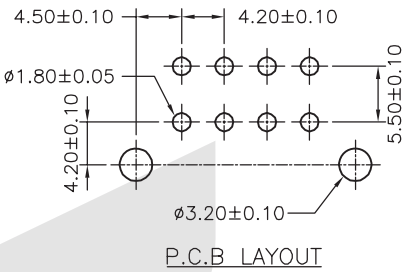

P.C.B LAYOUT

ORDER INFORMATION

Product NO.: KLS1-4.20 -2X05-RB

Pitch: 4.20=4.20mm
Pins: 1-Single layer 2-Double layer
Pin Number: 2~12Pin

Type: MH=Male Housing FT=Female Terminal
FH=Female Housing MT=Male Terminal
S=Straight pin R=Right pin
SW=Straight pin with Peg RW=Right pin with Peg
SB=Straight pin Special Type RB=Right pin with Ears

Box Header Series

KLS1-202C Box Header 1.27*1.27mm Straight Pin Type

Electrical Characteristics:

Current Rating:1 AMP
Insulator Resistance: 1000MΩmin. at DC 500V
Contact Resistance: 20mΩmax. at DC 100mA
Operating Temperature: -45°C~+105°C

Material:

Housing: 30% Glass filled PBT UL94V-0
Contacts: Brass
Plating: Gold plated: 2u" over 50u" nickel

Features:

* Fully shrouded for better protection.
* Two different color insulator to meet customer's choice.
* Straight, Right angle and Wire Wrap.

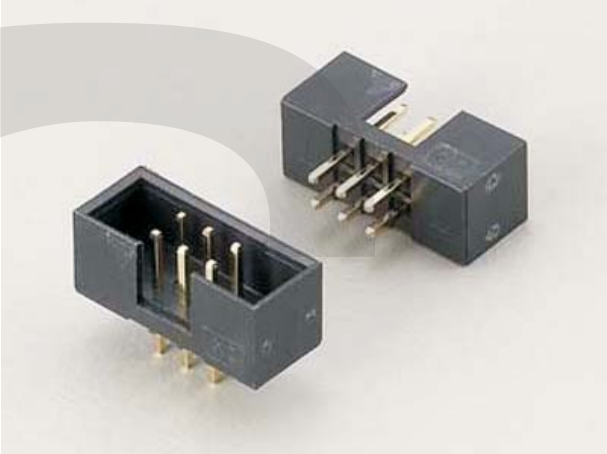

Straight Pin Type

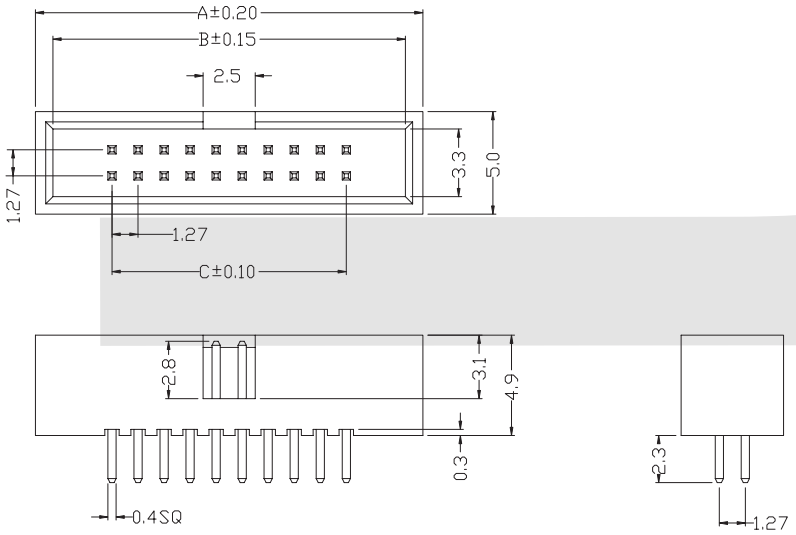

Dimension

position	A	B	C
08	11.28	9.58	3.81
10	12.55	10.85	5.08
12	13.82	12.12	6.35
14	15.09	13.39	7.62
16	16.36	14.66	8.89
20	18.90	17.20	11.43
26	22.71	21.01	15.24
30	25.25	23.55	17.78
34	27.79	26.09	20.32
40	31.60	29.90	24.13
44	34.14	32.44	26.67
50	37.95	36.25	30.48
60	44.30	42.60	36.83
68	49.38	47.68	41.91
80	57.00	55.30	49.53

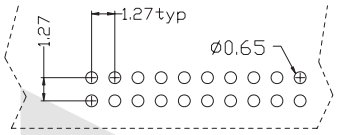

PCB LAYOUT

ORDER INFORMATION

Product No.: KLS1-202C-XX-S-B

Pos. No.
Box Header 1.27x1.27mm Series
B=Black G=Gray
S=Straight Pin R=Right Pin T=SMT Pin
Number of Contacts: XX=08-80Pin

Box Header Series

KLS1-202C Box Header 1.27*1.27mm Right Pin Type

Electrical Characteristics:

Current Rating:1 AMP
Insulator Resistance: 1000MΩmin. at DC 500V
Contact Resistance: 20mΩmax. at DC 100mA
Operating Temperature: -45°C~+105°C

Material:

Housing: 30% Glass filled PBT UL94V-0
Contacts: Brass
Plating: Gold plated: 2u" over 50u" nickel

Features:

* Fully shrouded for better protection.
* Two different color insulator to meet customer's choice.
* Straight, Right angle and Wire Wrap.

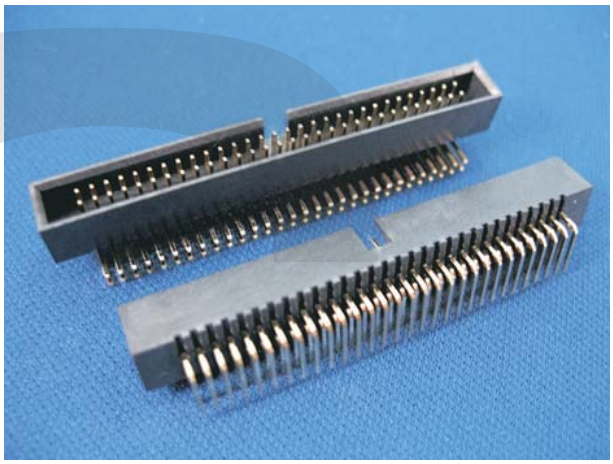

Right angle Type

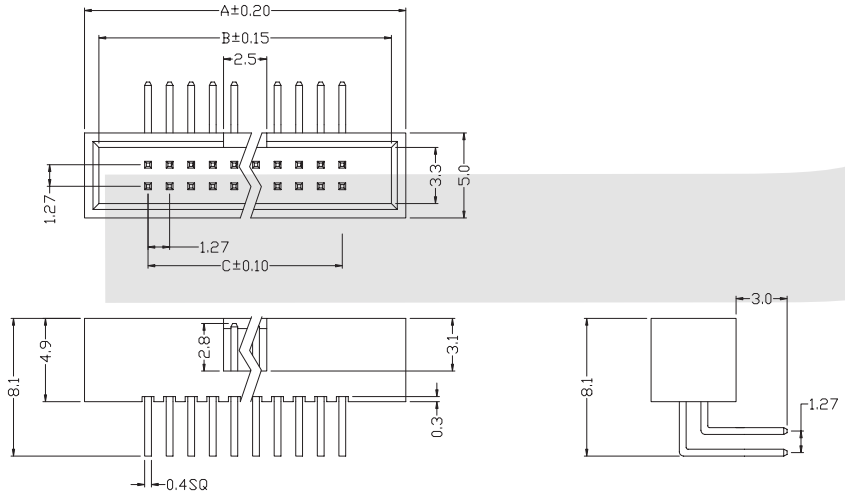

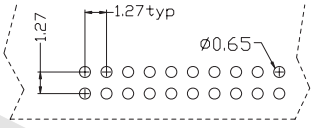

P.C.B Layout

Dimension

position	A	B	C
08	11.28	9.58	3.81
10	12.55	10.85	5.08
12	13.82	12.12	6.35
14	15.09	13.39	7.62
16	16.36	14.66	8.89
20	18.90	17.20	11.43
26	22.71	21.01	15.24
30	25.25	23.55	17.78
34	27.79	26.09	20.32
40	31.60	29.90	24.13
44	34.14	32.44	26.67
50	37.95	36.25	30.48
60	44.30	42.60	36.83
68	49.38	47.68	41.91
80	57.00	55.30	49.53

ORDER INFORMATION

Product No.: KLS1-202C-XX-R-B

Pos. No.
Box Header 1.27x1.27mm Series
B=Black G=Gray
S=Straight Pin R=Right Pin T=SMT Pin
Number of Contacts: XX=08-80Pin

Box Header Series

KLS1-202C Box Header 1.27*1.27mm SMT Type

Electrical Characteristics:

Current Rating:1 AMP
Insulator Resistance: 1000MΩmin. at DC 500V
Contact Resistance: 20mΩmax. at DC 100mA
Operating Temperature: -45°C~+105°C

Material:

Housing: 30% Glass filled PBT UL94V-0
Contacts: Brass
Plating: Gold plated: 2u" over 50u" nickel

Features:

* Fully shrouded for better protection.
* Two different color insulator to meet customer's choice.
* Straight, Right angle and Wire Wrap.

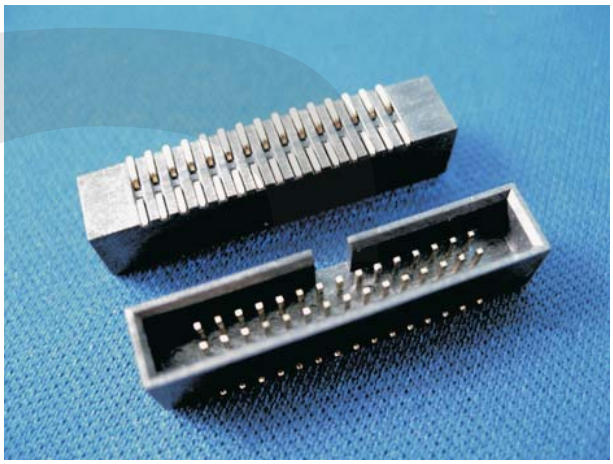

SMT Type

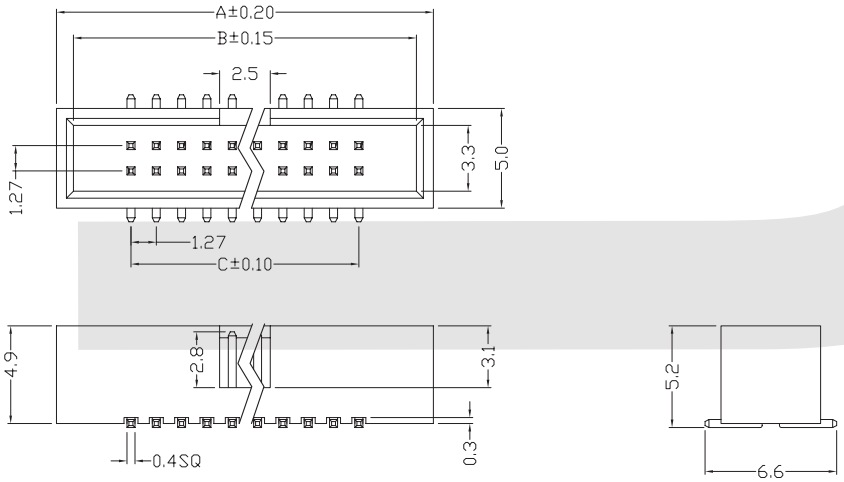

Dimension

position	A	B	C
08	11.28	9.58	3.81
10	12.55	10.85	5.08
12	13.82	12.12	6.35
14	15.09	13.39	7.62
16	16.36	14.66	8.89
20	18.90	17.20	11.43
26	22.71	21.01	15.24
30	25.25	23.55	17.78
34	27.79	26.09	20.32
40	31.60	29.90	24.13
44	34.14	32.44	26.67
50	37.95	36.25	30.48
60	44.30	42.60	36.83
68	49.38	47.68	41.91
80	57.00	55.30	49.53

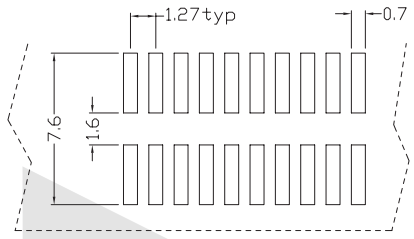

P.C.B Layout

ORDER INFORMATION

Product No.: KLS1-202C-XX-T-B

Pos. No.
Box Header 1.27x1.27mm Series
B=Black G=Gray
S=Straight Pin R=Right Pin T=SMT Pin
Number of Contacts: XX=08-80Pin

Box Header Series

KLS1-202D Box Header 1.27*2.54mm Straight pin Type

Electrical Characteristics:

Current Rating:1 AMP
Insulator Resistance: 1000MΩmin. at DC 500V
Contact Resistance: 20mΩmax. at DC 100mA
Operating Temperature: -45°C~+105°C

Material:

Housing: 30% Glass filled PBT UL94V-0
Contacts: Brass
Plating: Gold plated: 2u" over 50u" nickel

Features:

* Fully shrouded for better protection.
* Two different color insulator to meet customer's choice.
* Straight, Right angle and Wire Wrap.

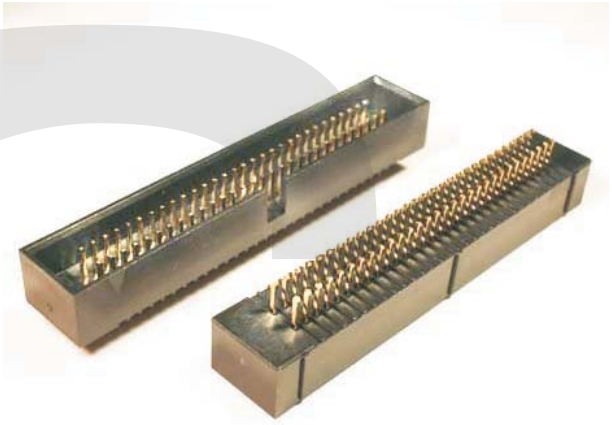

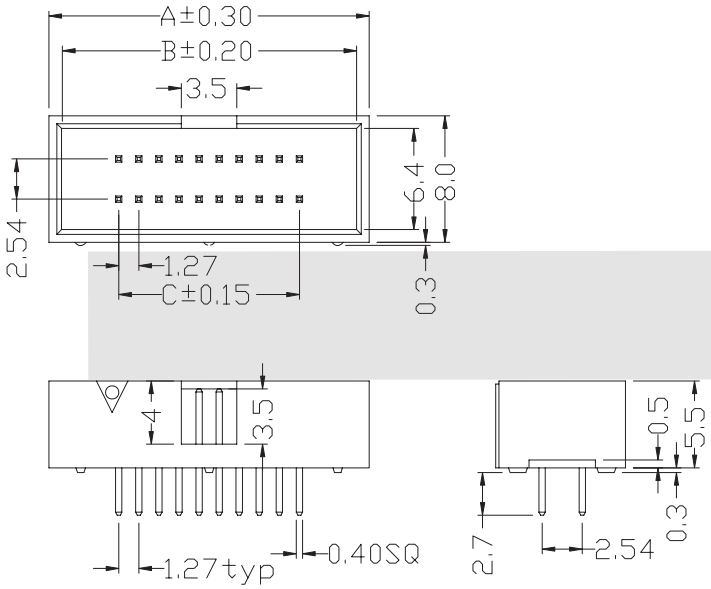

Dimension

position	A	B	C
08	12.64	11.04	3.81
10	13.91	12.31	5.08
12	15.18	13.58	6.35
14	16.45	14.85	7.62
16	17.72	16.12	8.89
20	20.26	18.66	11.43
26	24.07	22.47	15.24
30	26.61	25.01	17.78
34	29.15	27.55	20.32
40	32.96	31.36	24.13
44	35.50	33.90	26.67
50	39.31	37.71	30.48
60	45.66	44.06	36.83
64	48.20	46.60	39.37
68	50.74	49.14	41.91
80	58.36	56.76	49.53

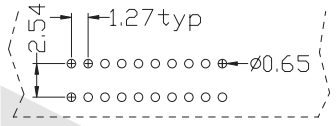

P.C.B Layout

ORDER INFORMATION

Product No.: KLS1-202D-XX-S-B

Pos. No.
Box Header 1.27x2.54mm Series
Number of Contacts: XX=08-80Pin
S=Straight Pin R=Right Pin T=SMT Pin
B=Black G=Gray

Box Header Series

KLS1-202D Box Header 1.27*2.54mm Right pin Type

Electrical Characteristics:

Current Rating:1 AMP
Insulator Resistance: 1000MΩmin. at DC 500V
Contact Resistance: 20mΩmax. at DC 100mA
Operating Temperature: -45°C~+105°C

Material:

Housing: 30% Glass filled PBT UL94V-0
Contacts: Brass
Plating: Gold plated: 2u" over 50u" nickel

Features:

* Fully shrouded for better protection.
* Two different color insulator to meet customer's choice.
* Straight, Right angle and Wire Wrap.



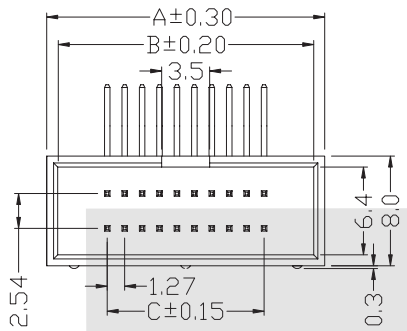

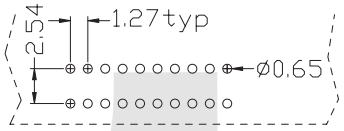

P.C.B Layout

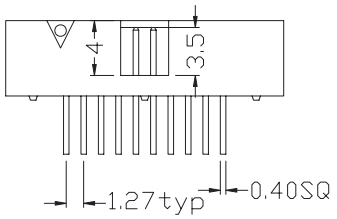

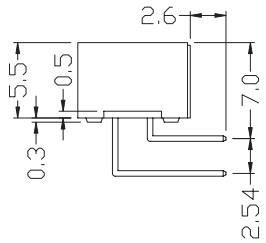

Dimension

position	A	B	C
08	12.64	11.04	3.81
10	13.91	12.31	5.08
12	15.18	13.58	6.35
14	16.45	14.85	7.62
16	17.72	16.12	8.89
20	20.26	18.66	11.43
26	24.07	22.47	15.24
30	26.61	25.01	17.78
34	29.15	27.55	20.32
40	32.96	31.36	24.13
44	35.50	33.90	26.67
50	39.31	37.71	30.48
60	45.66	44.06	36.83
64	48.20	46.60	39.37
68	50.74	49.14	41.91
80	58.36	56.76	49.53

ORDER INFORMATION

Product No.: KLS1-202D-XX-R-B

Pos. No.
Box Header 1.27x2.54mm Series
B=Black G=Gray
S=Straight Pin R=Right Pin T=SMT Pin
Number of Contacts: XX=08-80Pin

Box Header Series

KLS1-202D Box Header 1.27*2.54mm SMT Type

Electrical Characteristics:

Current Rating:1 AMP
Insulator Resistance: 1000MΩmin. at DC 500V
Contact Resistance: 20mΩmax. at DC 100mA
Operating Temperature: -45°C~+105°C

Material:

Housing: 30% Glass filled PBT UL94V-0
Contacts: Brass
Plating: Gold plated: 2u" over 50u" nickel

Features:

* Fully shrouded for better protection.
* Two different color insulator to meet customer's choice.
* Straight, Right angle and Wire Wrap.

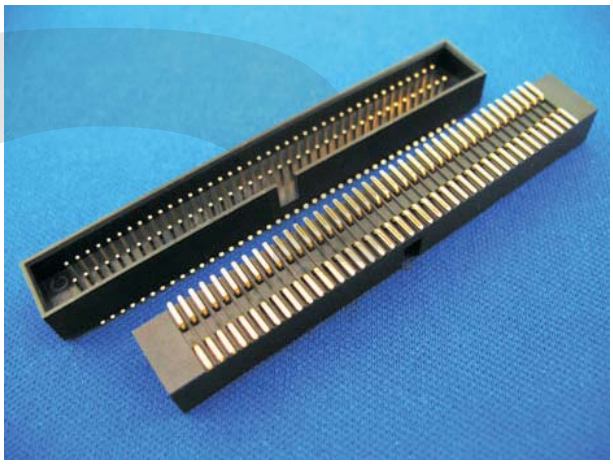

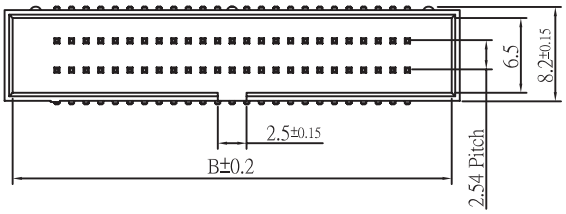

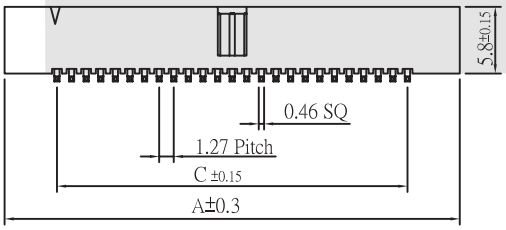

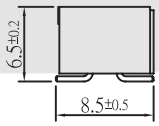

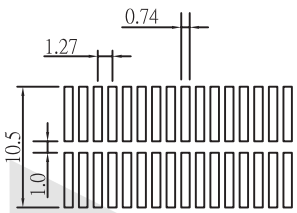

P.C.Board Layout

Dimension

position	A	B	C
08	12.64	11.04	3.81
10	13.91	12.31	5.08
12	15.18	13.58	6.35
14	16.45	14.85	7.62
16	17.72	16.12	8.89
20	20.26	18.66	11.43
26	24.07	22.47	15.24
30	26.61	25.01	17.78
34	29.15	27.55	20.32
40	32.96	31.36	24.13
44	35.50	33.90	26.67
50	39.31	37.71	30.48
60	45.66	44.06	36.83
64	48.20	46.60	39.37
68	50.74	49.14	41.91
80	58.36	56.76	49.53

ORDER INFORMATION

Product No.: KLS1-202D-XX-T-B

Pos. No.
Box Header 1.27x2.54mm Series
Number of Contacts: XX=08-80Pin
S=Straight Pin R=Right Pin T=SMT Pin
B=Black G=Gray

Box Header Series

KLS1-202B Box Header 2.00mm(0.079") Straight pin Type

Electrical Characteristics:

Current Rating:1 AMP
Insulator Resistance: 5000MΩmin. at DC 500V
Contact Resistance: 20mΩmax. at DC 100mA
Operating Temperature: -45°C~+105°C

Material:

Housing:30% Glass filled PBT UL94V-0
Contacts: Brass
Plating: Gold plated:2u". over 50u" nickel

Features:

* Fully shrouded provides ultimate reliability,
* Black or gray insulator available.
* Choices of Eject lever.

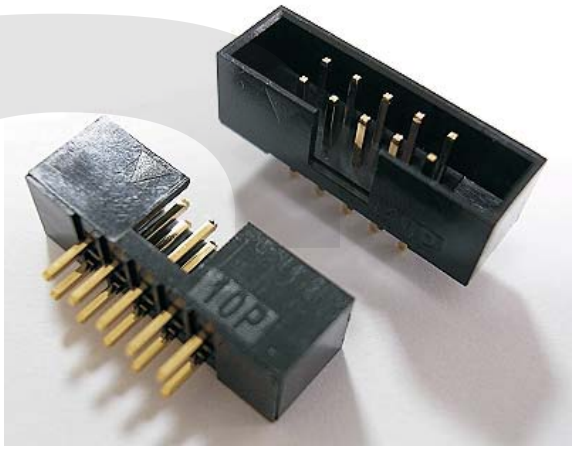

Straight Type

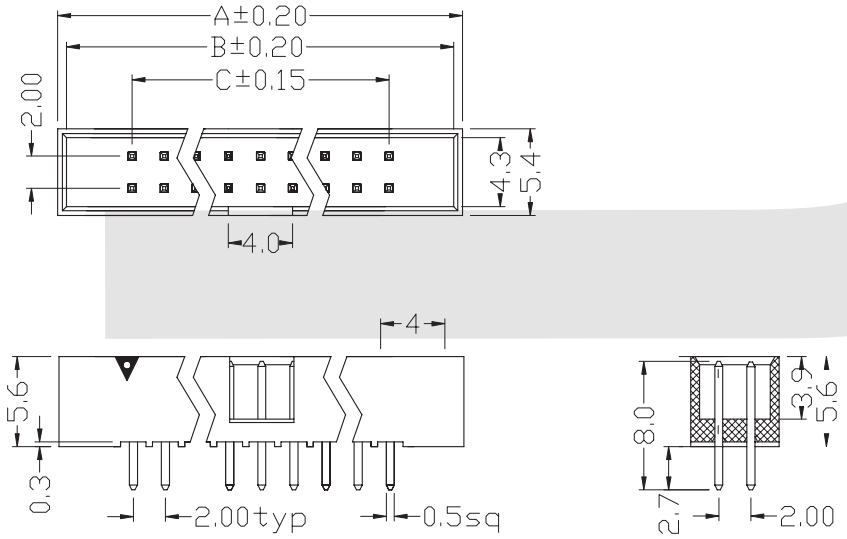

Dimension

position	A	B	C
08	15.20	14.00	6.00
10	17.20	16.00	8.00
14	21.20	20.00	12.00
16	23.20	22.00	14.00
20	27.20	26.00	18.00
24	31.20	30.00	22.00
26	33.20	32.00	24.00
30	37.20	36.00	28.00
34	41.20	40.00	32.00
40	47.20	46.00	38.00
44	51.20	50.00	42.00
50	57.20	56.00	48.00

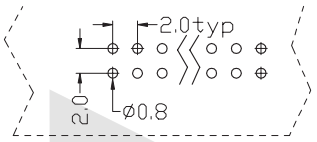

P. C. B Layout

ORDER INFORMATION

Product No.: KLS1-202B-XX-S-B

- Pos. No.
- Box Header 2.0mm Series
- Number of Contacts: XX=06-64Pin
- Tail Style: S=Straight Pin R=Right Pin T=SMT Pin
- Insulator Color: B=Black G=Gray L=Blue

Box Header Series

KLS1-202B Box Header 2.00mm(0.079") Right pin Type

Electrical Characteristics:

Current Rating:1 AMP
Insulator Resistance: 5000MΩmin. at DC 500V
Contact Resistance: 20mΩmax. at DC 100mA
Operating Temperature: -45°C~+105°C

Material:

Housing:30% Glass filled PBT UL94V-0
Contacts: Brass
Plating: Gold plated:2u". over 50u" nickel

Features:

* Fully shrouded provides ultimate reliability,
* Black or gray insulator available.
* Choices of Eject lever.



Right Angle Type

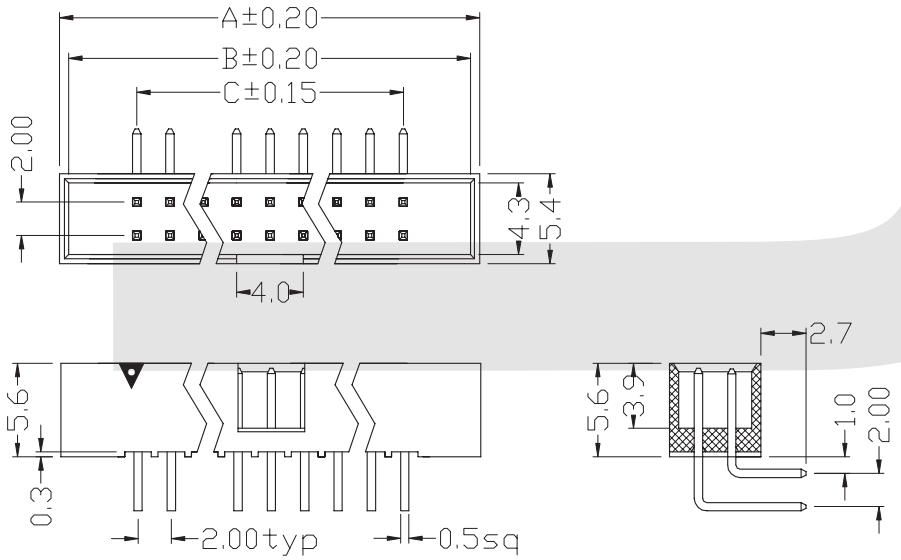

Dimension

position	A	B	C
08	15.20	14.00	6.00
10	17.20	16.00	8.00
14	21.20	20.00	12.00
16	23.20	22.00	14.00
20	27.20	26.00	18.00
24	31.20	30.00	22.00
26	33.20	32.00	24.00
30	37.20	36.00	28.00
34	41.20	40.00	32.00
40	47.20	46.00	38.00
44	51.20	50.00	42.00
50	57.20	56.00	48.00

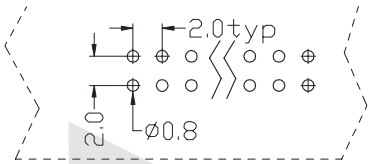

P. C. B Layout

ORDER INFORMATION

Product No.: KLS1-202B-XX-R-B

- Pos. No.
- Box Header 2.0mm Series
- Number of Contacts: XX=06-64Pin
- Tail Style: S=Straight Pin R=Right Pin T=SMT Pin
- Insulator Color: B=Black G=Gray L=Blue

Box Header Series

KLS1-202B Box Header 2.00mm(0.079") SMT pin Type

Electrical Characteristics:
Current Rating:1 AMP
Insulator Resistance: 5000MΩmin. at DC 500V
Contact Resistance: 20mΩmax. at DC 100mA
Operating Temperature: -45°C~+105°C

Material:
Housing:30% Glass filled PBT UL94V-0
Contacts: Brass
Plating: Gold plated:2u". over 50u" nickel

Features:
* Fully shrouded provides ultimate reliability,
* Black or gray insulator available.
* Choices of Eject lever.

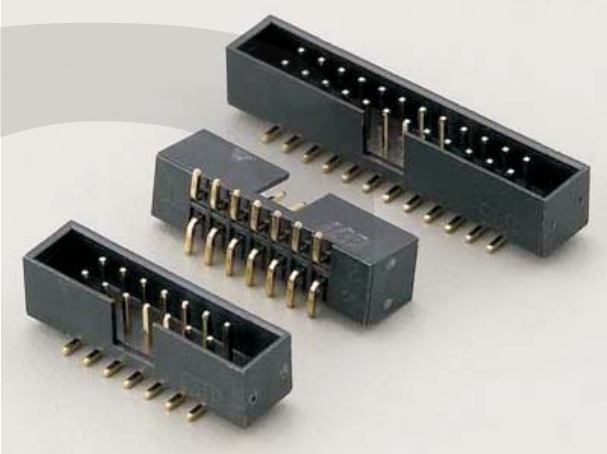

SMT Type

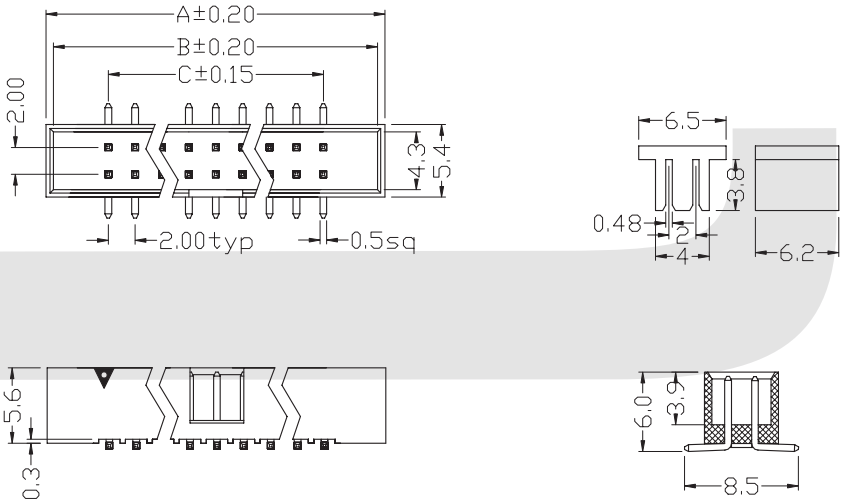

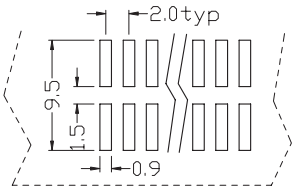

P. C. B Layout

Dimension

position	A	B	C
08	15.20	14.00	6.00
10	17.20	16.00	8.00
14	21.20	20.00	12.00
16	23.20	22.00	14.00
20	27.20	26.00	18.00
24	31.20	30.00	22.00
26	33.20	32.00	24.00
30	37.20	36.00	28.00
34	41.20	40.00	32.00
40	47.20	46.00	38.00
44	51.20	50.00	42.00
50	57.20	56.00	48.00

ORDER INFORMATION

Product No.: KLS1-202B-XX-T-B

- Pos. No.
- Box Header 2.0mm Series
- Number of Contacts: XX=06-64Pin
- Tail Style: S=Straight Pin R=Right Pin T=SMT Pin
- Insulator Color: B=Black G=Gray L=Blue

Box Header Series

KLS1-202 Box Header 2.54mm(0.100") Straight pin Type



Electrical Characteristics:

Current Rating:1 AMP
Insulator Resistance: 5000MΩmin. at DC 500V
Contact Resistance: 20mΩmax. at DC 100mA
Operating Temperature: -45°C~+105°C

Material:

Housing:30% Glass filled PBT UL94V-0
Contacts: Brass
Plating: Selective gold plated:gold plated on mating area and nickel pleated on wire cutting area
Gold plated:2u". over 50u" nickel
Tin plated:100u". over 50u" nickel

Features:

* Fully shrouded provides ultimate reliability,
* With center polarization.
*Straight,Right angle and Wire Wrap

Srtraight Type

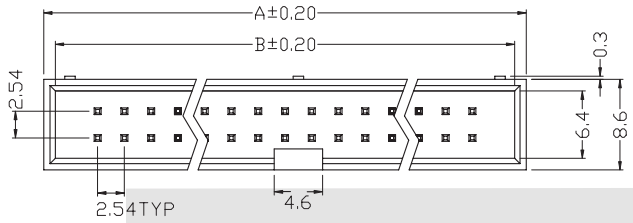

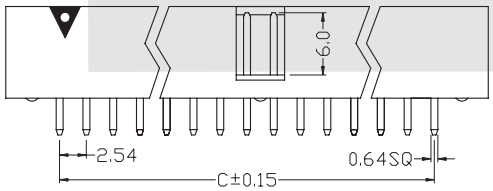

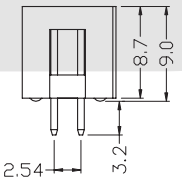

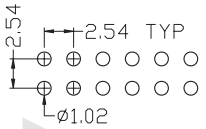

P. C. B. Layout

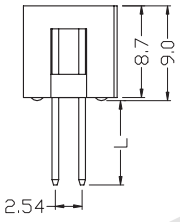

Long Dip

Dimension

position	A	B	C
06	15.24	13.04	5.08
08	17.78	15.58	7.62
10	20.32	18.12	10.16
12	22.86	20.66	12.70
14	25.40	23.20	15.24
16	27.94	25.74	17.78
20	33.02	30.82	22.86
24	38.10	35.90	27.94
26	40.64	38.44	30.48
30	45.72	43.52	35.56
34	50.80	48.60	40.64
40	58.42	56.22	48.26
50	71.12	68.92	60.96
60	83.82	81.62	73.66
64	88.90	86.70	78.74

ORDER INFORMATION

Product No.: KLS1-202-XX-S-B

- Pos. No.
- Box Header 2.54mm Series
- Number of Contacts: XX=06~64Pin
- Tail Style: S=Straight Pin R=Right Pin T=SMT Pin
- Insulator Color: B=Black G=Gray L=Blue

I

Box Header Series

KLS1-202 Box Header 2.54mm(0.100") Right pin Type



Electrical Characteristics:

Current Rating:1 AMP
Insulator Resistance: 5000MΩmin. at DC 500V
Contact Resistance: 20mΩmax. at DC 100mA
Operating Temperature: -45°C~+105°C

Material:

Housing:30% Glass filled PBT UL94V-0
Contacts: Brass
Plating: Selective gold plated:gold plated on mating area and nickel pleated on wire cutting area
Gold plated:2u". over 50u" nickel
Tin plated:100u". over 50u" nickel

Features:

* Fully shrouded provides ultimate reliability,
* With center polarization.
*Straight,Right angle and Wire Wrap

Right Angle Type

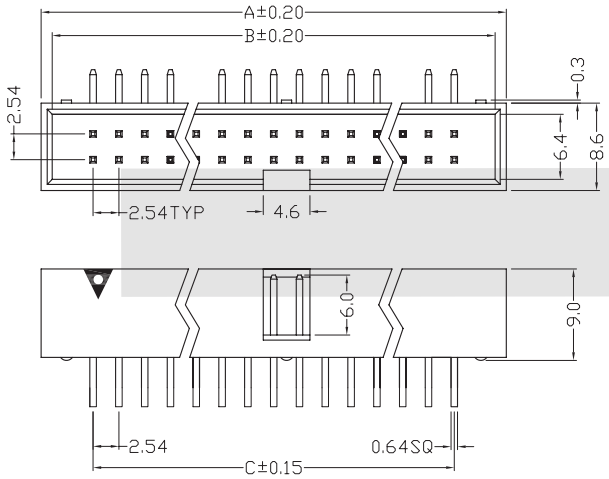

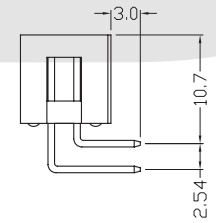

Dimension

position	A	B	C
06	15.24	13.04	5.08
08	17.78	15.58	7.62
10	20.32	18.12	10.16
12	22.86	20.66	12.70
14	25.40	23.20	15.24
16	27.94	25.74	17.78
20	33.02	30.82	22.86
24	38.10	35.90	27.94
26	40.64	38.44	30.48
30	45.72	43.52	35.56
34	50.80	48.60	40.64
40	58.42	56.22	48.26
50	71.12	68.92	60.96
60	83.82	81.62	73.66
64	88.90	86.70	78.74

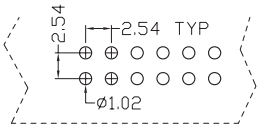

P.C.B Layout

ORDER INFORMATION

Product No.: KLS1-202-XX-R-B

Pos. No.
Box Header 2.54mm Series
Number of Contacts: XX=06~64Pin
Tail Style: S=Straight Pin R=Right Pin T=SMT Pin
Insulator Color: B=Black G=Gray L=Blue

Box Header Series

KLS1-202 Box Header 2.54mm(0.100") SMT pin Type

Electrical Characteristics:

Current Rating:1 AMP
Insulator Resistance: 5000MΩmin. at DC 500V
Contact Resistance: 20mΩmax. at DC 100mA
Operating Temperature: -45°C~+105°C

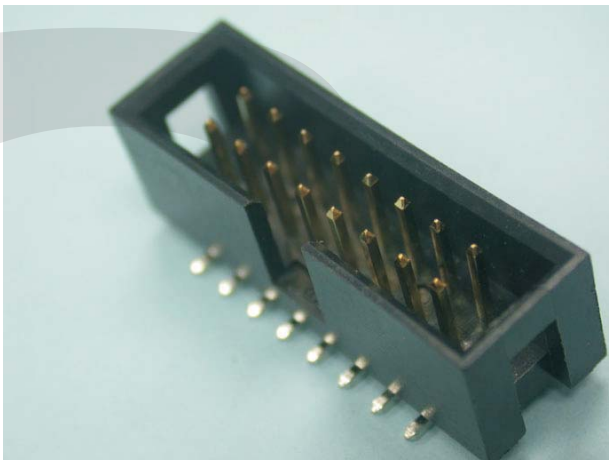

Material:

Housing:30% Glass filled PBT UL94V-0
Contacts: Brass
Plating: Selective gold plated:gold plated on mating area and nickel pleated on wire cutting area
Gold plated:2u". over 50u" nickel
Tin plated:100u". over 50u" nickel

Features:

* Fully shrouded provides ultimate reliability,
* With center polarization.
*Straight,Right angle and Wire Wrap

SMT Type

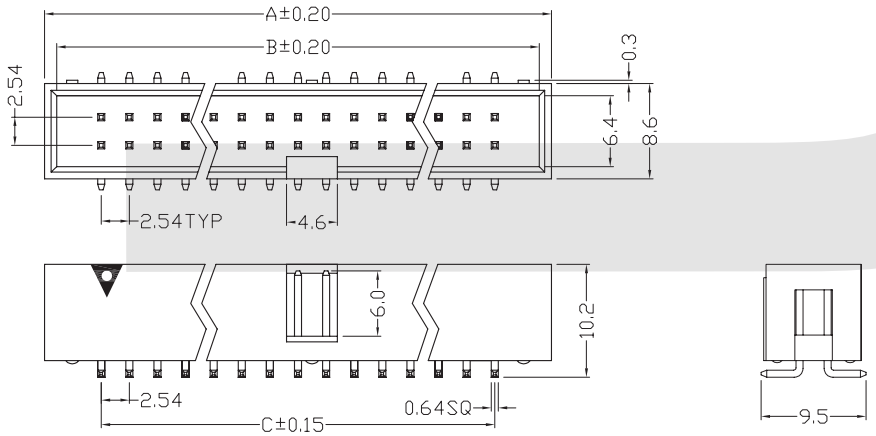

Dimension

position	A	B	C
06	15.24	13.04	5.08
08	17.78	15.58	7.62
10	20.32	18.12	10.16
12	22.86	20.66	12.70
14	25.40	23.20	15.24
16	27.94	25.74	17.78
20	33.02	30.82	22.86
24	38.10	35.90	27.94
26	40.64	38.44	30.48
30	45.72	43.52	35.56
34	50.80	48.60	40.64
40	58.42	56.22	48.26
50	71.12	68.92	60.96
60	83.82	81.62	73.66
64	88.90	86.70	78.74

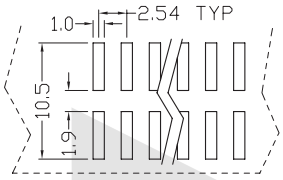

P.C.B Layout

ORDER INFORMATION

Product No.: KLS1-202-XX-T-B

Pos. No.
Box Header 2.54mm Series
Insulator Color: B=Black G=Gray L=Blue
Tail Style: S=Straight Pin R=Right Pin T=SMT Pin
Number of Contacts: XX=06~64Pin

Box Header Series

KLS1-201C Ejector Header 1.27*1.27mm Straight Pin Type

Electrical Characteristics:

Current Rating:1 AMP
Insulator Resistance: 1000MΩ min. at DC 500V
Contact Resistance: 20mΩmax. at DC 100mA
Operating Temperature: -45°C~+105°C

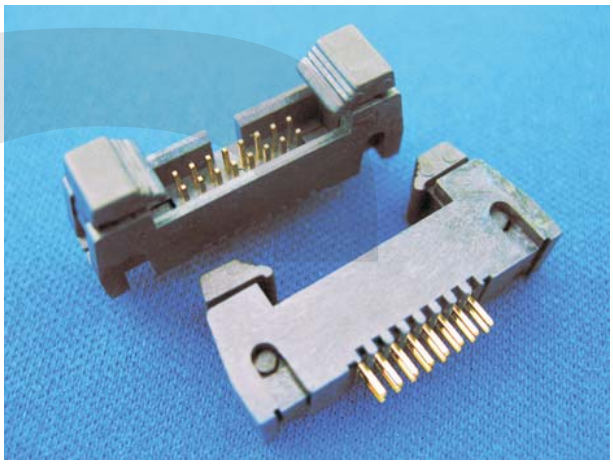

Material:

Housing: PBT UL 94V-0/ LCP
Contacts: Brass
Plating: Gold plated: 1u".
Over 0.8u" ~r 50u" nickel Selective gold plated

Features:

* Fully shrouded for better protection.
* Two different color insulator to meet customer's choice.
* Straight, Right angle and Wire Wrap.

Straight Pin Type

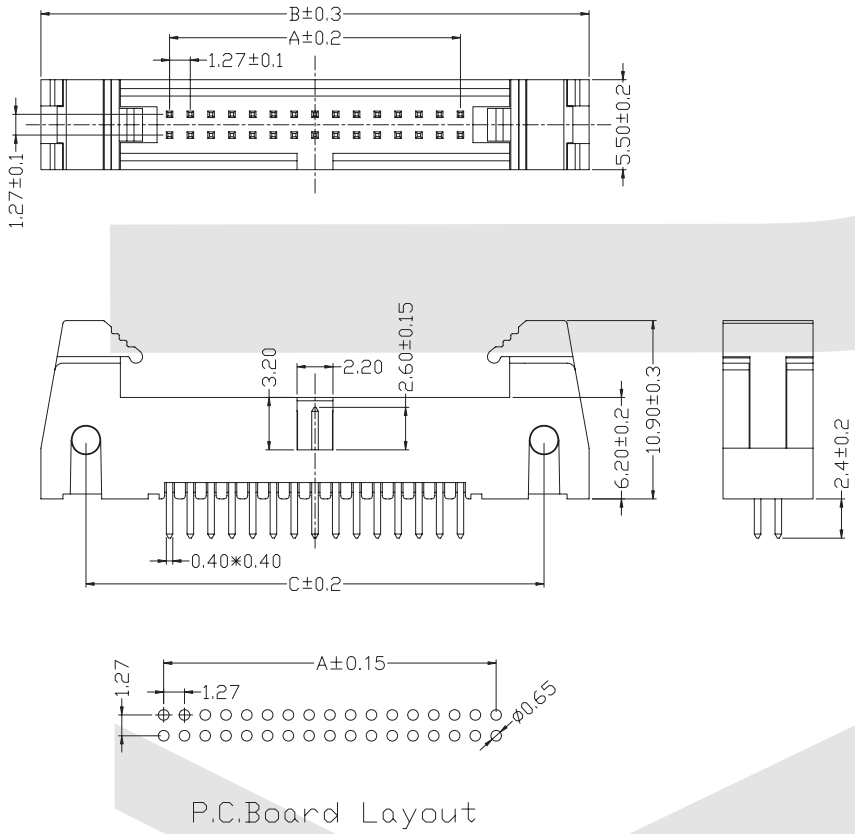

position	A	B	C
06	2.54	18.31	12.81
08	3.81	19.58	14.08
10	5.08	20.85	15.35
14	7.62	23.39	17.89
16	8.89	24.66	19.16
18	10.16	25.93	20.43
20	11.43	27.20	21.70
26	15.24	31.01	25.51
30	17.78	33.55	28.05
34	20.32	36.09	30.59
40	24.13	39.90	34.40
50	30.48	46.25	40.75
60	36.83	52.6	47.1
68	41.91	57.68	52.18

P.C.Board Layout

ORDER INFORMATION

Product No.: KLS1-201C-XX-S-B

Pos. No.
Ejector Header 1.27x1.27mm Series
Number of Contacts: XX=06-68Pin
S=Straight Pin R=Right Pin T=SMT Pin
B=Black G=Gray

Box Header Series

KLS1-201C Ejector Header 1.27*1.27mm Right Pin Type

Electrical Characteristics:

Current Rating:1 AMP
Insulator Resistance: 1000MΩmin. at DC 500V
Contact Resistance: 20mΩmax. at DC 100mA
Operating Temperature: -45°C~+105°C

Material:

Housing: PBT UL 94V-0/ LCP
Contacts: Brass
Plating: Gold plated: 1u".
Over 0.8u" ~r 50u" nickel Selective gold plated

Features:

* Fully shrouded for better protection.
* Two different color insulator to meet customer's choice.
* Straight, Right angle and Wire Wrap.

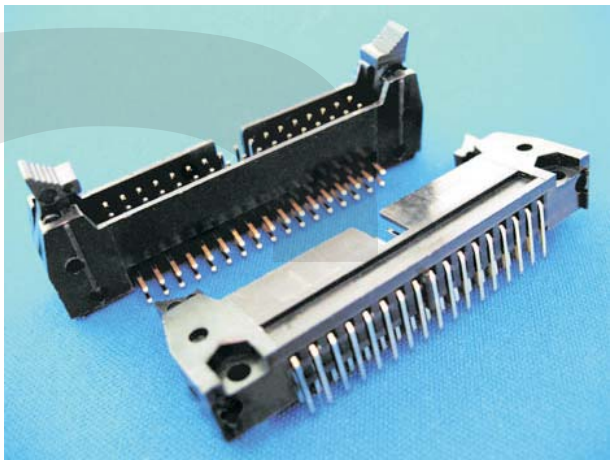

Right angle Type

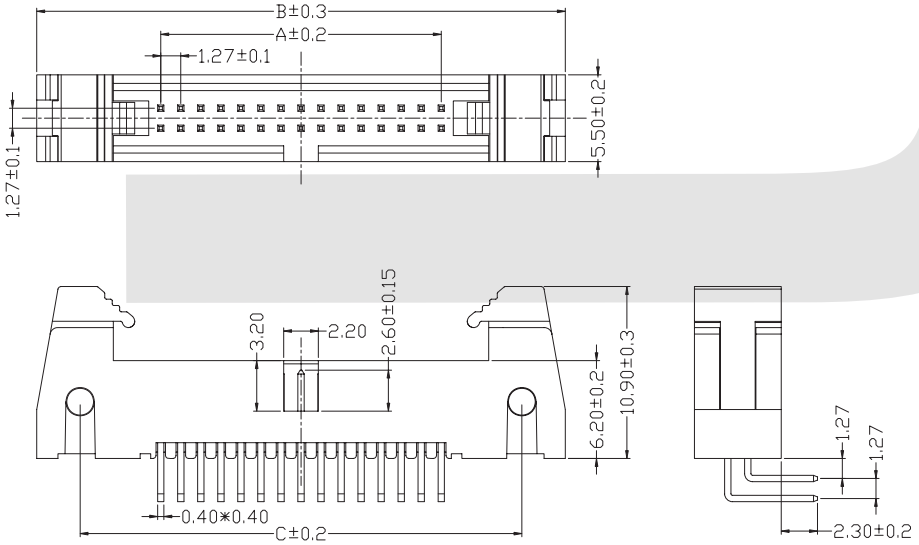

position	A	B	C
06	2.54	18.31	12.81
08	3.81	19.58	14.08
10	5.08	20.85	15.35
14	7.62	23.39	17.89
16	8.89	24.66	19.16
18	10.16	25.93	20.43
20	11.43	27.20	21.70
26	15.24	31.01	25.51
30	17.78	33.55	28.05
34	20.32	36.09	30.59
40	24.13	39.90	34.40
50	30.48	46.25	40.75
60	36.83	52.6	47.1
68	41.91	57.68	52.18

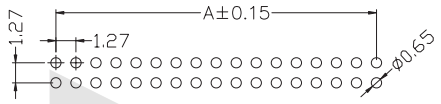

P.C.Board Layout

ORDER INFORMATION

Product No.: KLS1-201C-XX-R-B

Pos. No.
Ejector Header 1.27x1.27mm Series
B=Black G=Gray
S=Straight Pin R=Right Pin T=SMT Pin
Number of Contacts: XX=06-68Pin

Box Header Series

KLS1-201C Ejector Header 1.27*1.27mm SMT Type

Electrical Characteristics:

Current Rating:1 AMP
Insulator Resistance: 1000MΩmin. at DC 500V
Contact Resistance: 20mΩmax. at DC 100mA
Operating Temperature: -45°C~+105°C

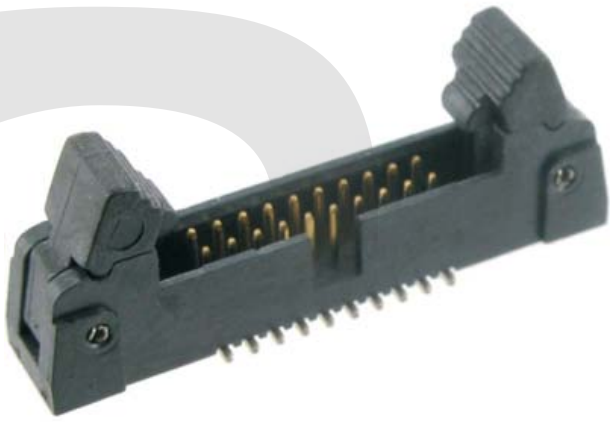

Material:

Housing: PBT UL 94V-0/ LCP
Contacts: Brass
Plating: Gold plated: 1u".
Over 0.8u" ~r 50u" nickel Selective gold plated

Features:

* Fully shrouded for better protection.
* Two different color insulator to meet customer's choice.
* Straight, Right angle and Wire Wrap.

SMT Type

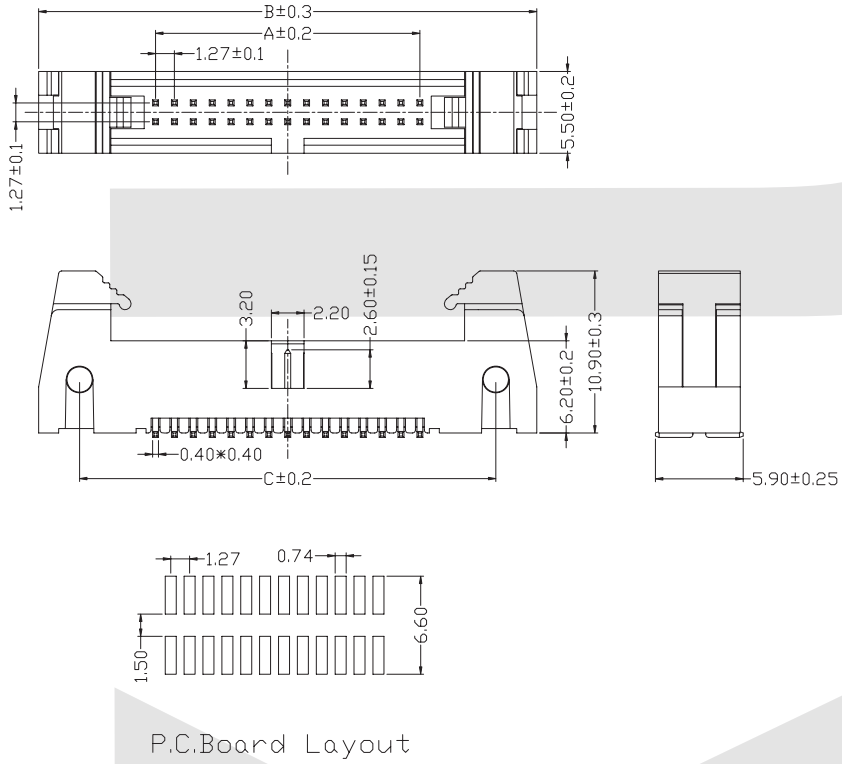

P.C.Board Layout

position	A	B	C
06	2.54	18.31	12.81
08	3.81	19.58	14.08
10	5.08	20.85	15.35
14	7.62	23.39	17.89
16	8.89	24.66	19.16
18	10.16	25.93	20.43
20	11.43	27.20	21.70
26	15.24	31.01	25.51
30	17.78	33.55	28.05
34	20.32	36.09	30.59
40	24.13	39.90	34.40
50	30.48	46.25	40.75
60	36.83	52.6	47.1
68	41.91	57.68	52.18

ORDER INFORMATION

Product No.: KLS1-201C-XX-T-B

Pos. No.
Ejector Header 1.27x1.27mm Series
B=Black G=Gray
S=Straight Pin R=Right Pin T=SMT Pin
Number of Contacts: XX=06-68Pin

Box Header Series

KLS1-201B Ejector Header 2.00mm Straight Pin Type

Electrical Characteristics:

Current Rating:1 AMP
Insulator Resistance: 1000MΩmin. at DC 500V
Contact Resistance: 20mΩmax. at DC 100mA
Operating Temperature: -45°C~+105°C

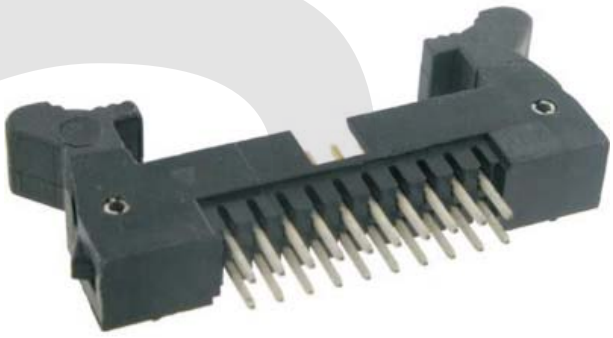

Material:

Housing:30% Glass filled PBT UL94V-0
Contacts: Bronze
Plating: Gold plated: 1u". over 50u" nickel
Selective gold plated: Standard gold on mating area and tin plated on solder tail.

Features:

* Fully shrouded provides ultimate reliability,
* Black or gray insulator available.
* Choices of Eject lever.

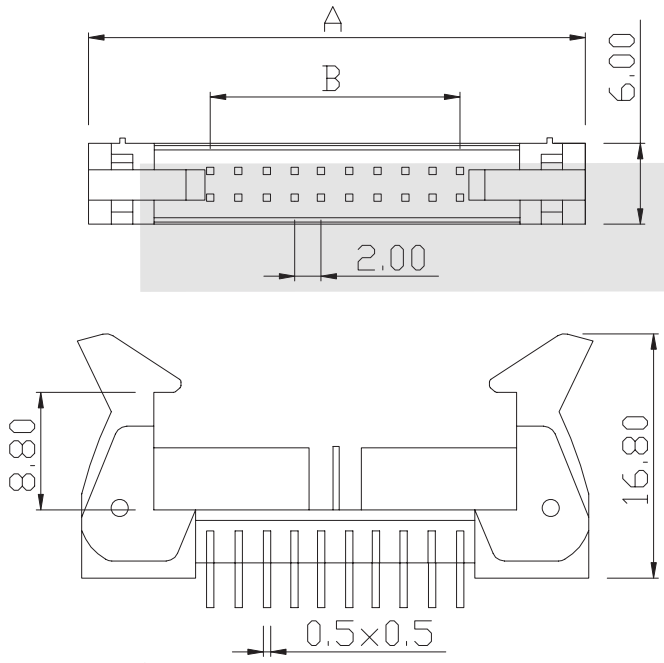

Dimension

Position	A	B
10	25.70	8.00
12	27.70	10.00
14	29.70	12.00
16	31.70	14.00
20	35.70	18.00
22	37.70	20.00
26	41.70	24.00
30	45.70	28.00
34	49.70	32.00
40	55.70	38.00
44	59.70	42.00
50	65.70	48.00
68	83.70	66.00

ORDER INFORMATION

Product No.: KLS1-201B-XX-S-B

Pos. No.
Ejector Header 2.00mm
Number of Contacts: XX=10-68Pin
B=Black G=Gray
S=Straight Pin R=Right Pin T=SMT Pin

Box Header Series

I

KLS1-201B Ejector Header 2.00mm Right Pin Type

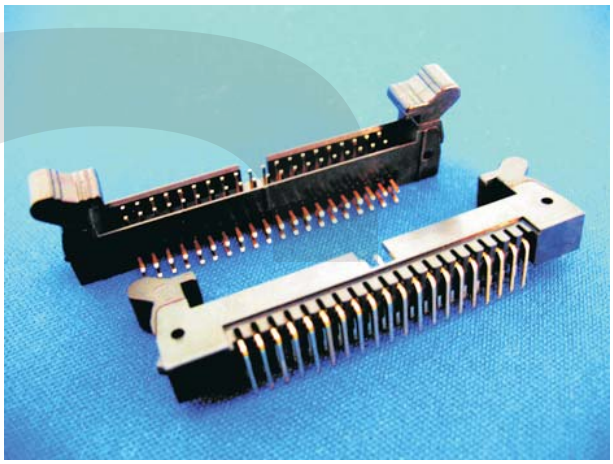

Electrical Characteristics:

Current Rating:1 AMP
Insulator Resistance: 1000MΩmin. at DC 500V
Contact Resistance: 20mΩmax. at DC 100mA
Operating Temperature: -45°C~+105°C

Material:

Housing:30% Glass filled PBT UL94V-0
Contacts: Bronze
Plating: Gold plated: 1u". over 50u" nickel
Selective gold plated: Standard gold on mating area and tin plated on solder tail.

Features:

* Fully shrouded provides ultimate reliability,
* Black or gray insulator available.
* Choices of Eject lever.

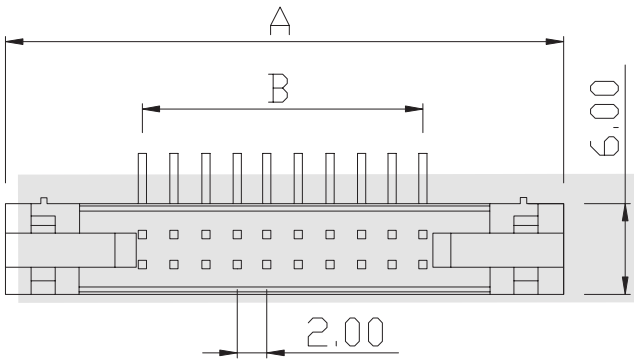

Dimension

Position	A	B
10	25.70	8.00
12	27.70	10.00
14	29.70	12.00
16	31.70	14.00
20	35.70	18.00
22	37.70	20.00
26	41.70	24.00
30	45.70	28.00
34	49.70	32.00
40	55.70	38.00
44	59.70	42.00
50	65.70	48.00
68	83.70	66.00

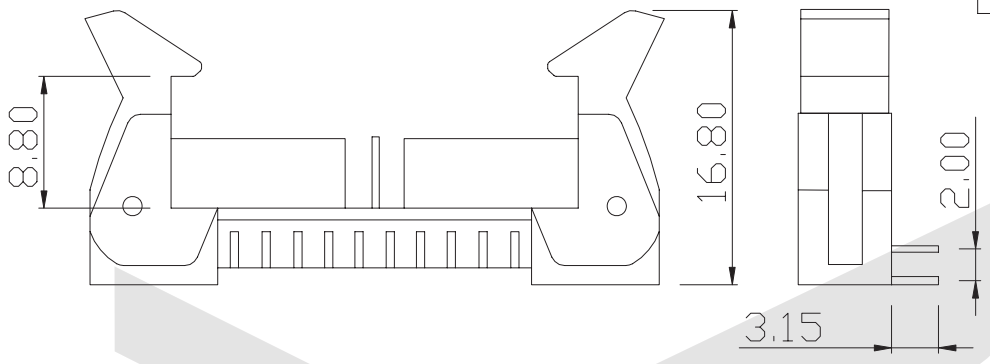

ORDER INFORMATION

Product No.: KLS1-201B-XX-R-B

Pos. No.
Ejector Header 2.00mm
Number of Contacts: XX=10-68Pin

B=Black G=Gray
S=Straight Pin R=Right Pin T=SMT Pin

Box Header Series

KLS1-201B Ejector Header 2.00mm SMT Type

Electrical Characteristics:

Current Rating:1 AMP
Insulator Resistance: 1000MΩmin. at DC 500V
Contact Resistance: 20mΩmax. at DC 100mA
Operating Temperature: -45°C~+105°C

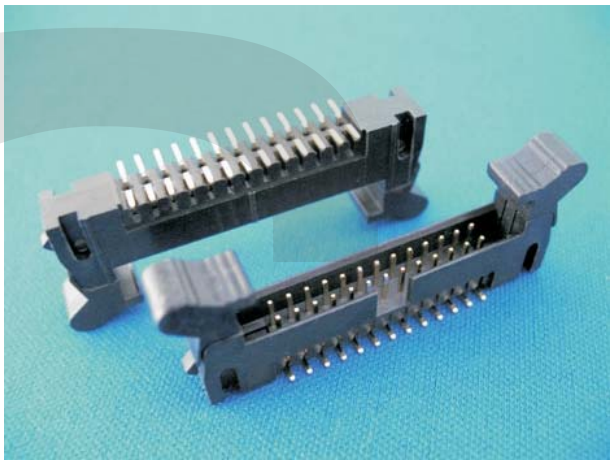

Material:

Housing:30% Glass filled PBT UL94V-0
Contacts: Bronze
Plating: Gold plated: 1u". over 50u" nickel
Selective gold plated: Standard gold on mating area and tin plated on solder tail.

Features:

* Fully shrouded provides ultimate reliability,
* Black or gray insulator available.
* Choices of Eject lever.

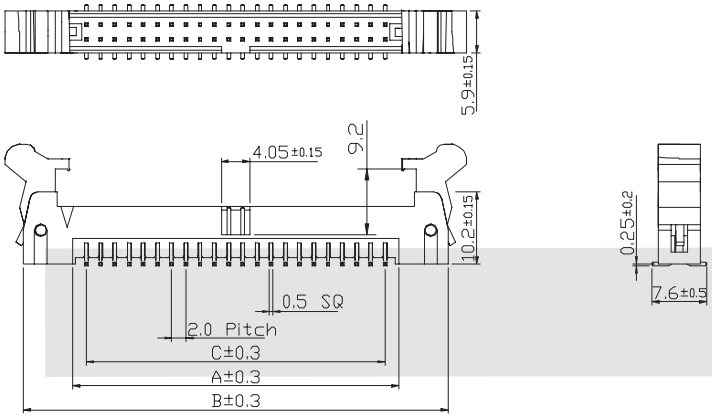

SMT short ejector type

Dimension

Position	A	B
10	25.70	8.00
12	27.70	10.00
14	29.70	12.00
16	31.70	14.00
20	35.70	18.00
22	37.70	20.00
26	41.70	24.00
30	45.70	28.00
34	49.70	32.00
40	55.70	38.00
44	59.70	42.00
50	65.70	48.00
68	83.70	66.00

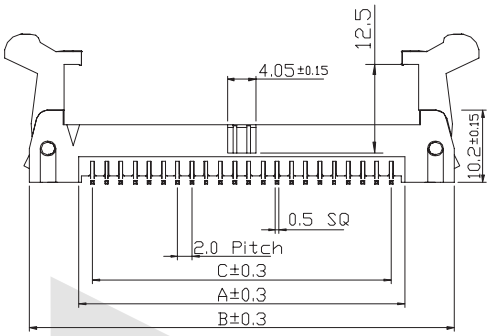

SMT long ejector type

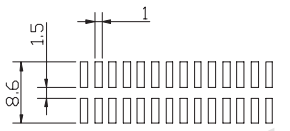

P.C.Board Layout

ORDER INFORMATION

Product No.: KLS1-201B-XX-T-B

Pos. No.
Ejector Header 2.00mm
Number of Contacts: XX=10-68Pin

B=Black G=Gray
S=Straight Pin R=Right Pin T=SMT Pin

Box Header Series

KLS1-201X Ejector Header 2.54mm(0.100") Straight pin Type

Electrical Characteristics:

Current Rating:1 AMP
Insulator Resistance: 5000MΩmin. at DC 500V
Contact Resistance: 20mΩmax. at DC 100mA
Operating Temperature: -45°C~+105°C

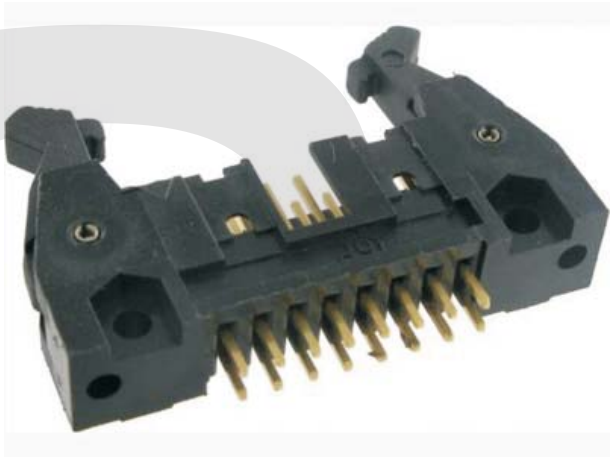

Material:

Housing:30% Glass filled PBT UL94V-0
Contacts: Brass
Plating: Gold plated:1u". over 50u" nickel
Selective gold plated :Standard gold on mating area and tin plated on solder tail

Features:

* Fully shrouded provides ultimate reliability,
* Black or gray insulator available.
* Choices of Eject lever.

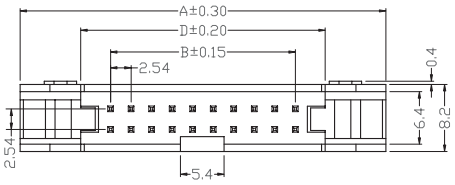

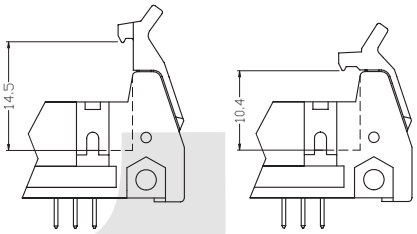

Long Lever ShortLever

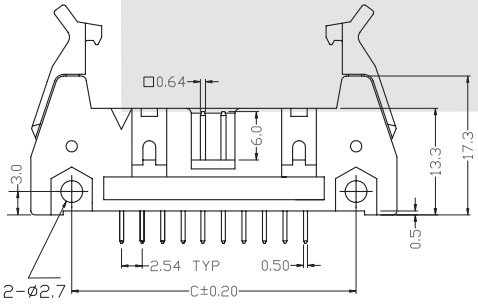

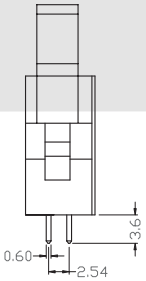

Strainght Type

Dimension

position	A	B	C	D
06	26.86	5.08	16.76	12.76
08	29.40	7.62	19.30	15.30
10	31.94	10.16	21.84	17.84
14	37.02	15.24	26.92	22.92
16	39.56	17.78	29.46	25.46
20	44.64	22.86	34.54	30.54
26	52.26	30.48	42.16	38.16
30	57.34	35.56	47.24	43.24
34	62.42	40.64	52.32	48.32
40	70.04	48.26	59.94	55.94
50	82.74	60.96	72.64	68.64
60	95.44	73.66	85.34	81.34
64	100.52	78.74	90.42	86.42

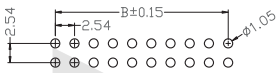

P.C.B Layout

ORDER INFORMATION

Product No.: KLS1-201X-XX-S-B

Pos. No.
Ejector header 2.54mm Series
Number of Contacts: XX=06-64Pin
Tail Style: S=Straight Pin R=Right Pin
Insulator Color: B=Black G=Gray

I

Box Header Series

KLS1-201X Ejector Header 2.54mm(0.100") Right Pin Type

Electrical Characteristics:

Current Rating:1 AMP
Insulator Resistance: 5000MΩmin. at DC 500V
Contact Resistance: 20mΩmax. at DC 100mA
Operating Temperature: -45°C~+105°C

Material:

Housing:30% Glass filled PBT UL94V-0
Contacts: Brass
Plating: Gold plated:1u". over 50u" nickel
Selective gold plated :Standard gold on mating area and tin plated on solder tail

Features:

* Fully shrouded provides ultimate reliability,
* Black or gray insulator available.
* Choices of Eject lever.

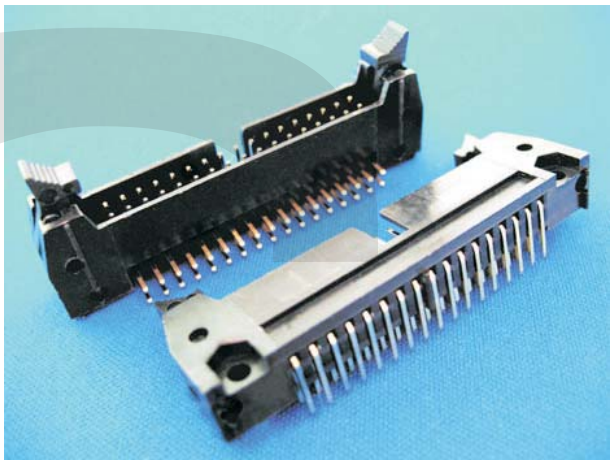

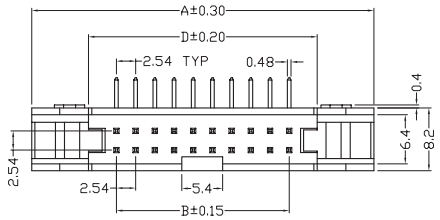

Right Angle Type

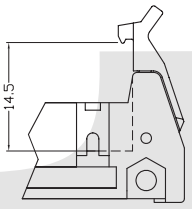

Long Lever

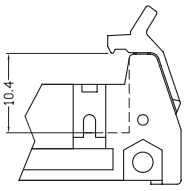

Short Lever

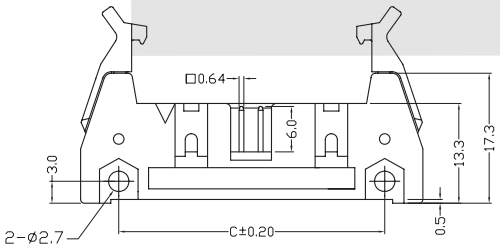

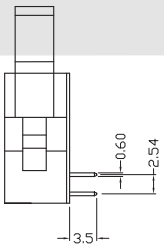

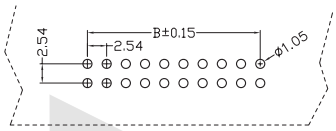

P.C.B Layout

Dimension

position	A	B	C	D
06	26.86	5.08	16.76	12.76
08	29.40	7.62	19.30	15.30
10	31.94	10.16	21.84	17.84
14	37.02	15.24	26.92	22.92
16	39.56	17.78	29.46	25.46
20	44.64	22.86	34.54	30.54
26	52.26	30.48	42.16	38.16
30	57.34	35.56	47.24	43.24
34	62.42	40.64	52.32	48.32
40	70.04	48.26	59.94	55.94
50	82.74	60.96	72.64	68.64
60	95.44	73.66	85.34	81.34
64	100.52	78.74	90.42	86.42

ORDER INFORMATION

Product No.: KLS1-201X-XX-R-B

Pos. No.
Ejector header 2.54mm Series
Number of Contacts: XX=06-64Pin
Tail Style: S=Straight Pin R=Right Pin
Insulator Color: B=Black G=Gray

Box Header Series

KLS1-201 Ejector Header 2.54mm(0.100")

Electrical Characteristics:

Current Rating:1 AMP
Insulator Resistance: 5000MΩmin. at DC 500V
Contact Resistance: 20mΩmax. at DC 100mA
Operating Temperature: -45°C~+105°C

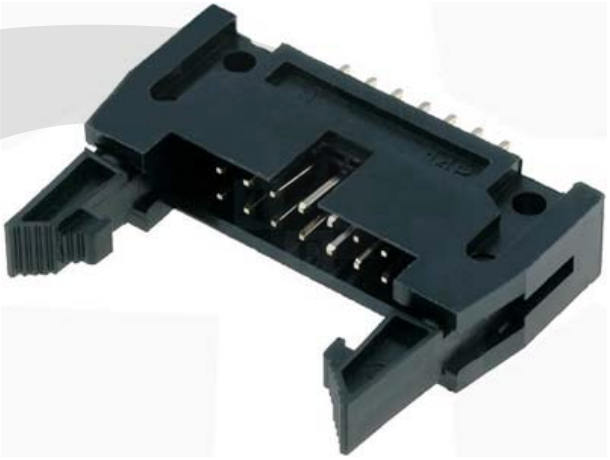

Material:

Housing:30% Glass filled PBT UL94V-0
Contacts: Brass
Plating: Gold plated:2u". over 50u" nickel

Features:

* Fully shrouded provides ultimate reliability,
* Black or gray insulator available.
* Choices of Eject lever.

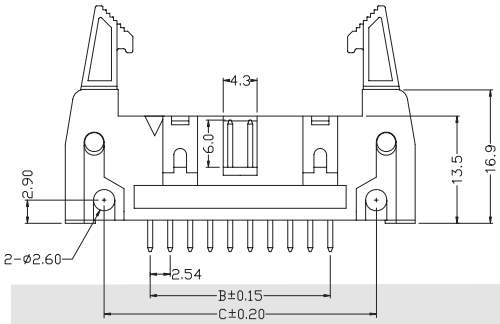

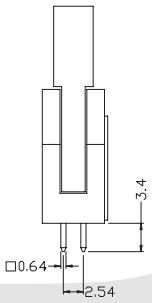

Straight Type

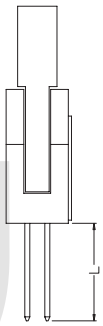

Long Dip

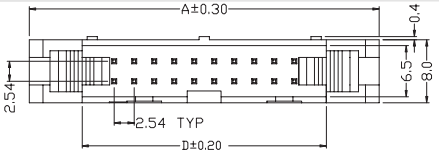

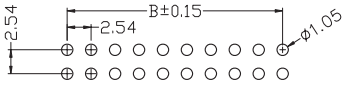

P.C.B Layout

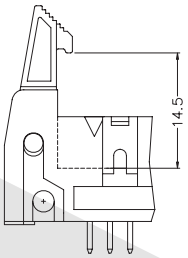

Long Lever

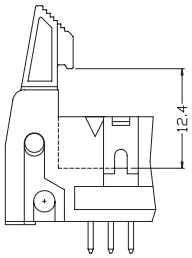

Short Lever

Dimension

position	A	B	C	D
06	26.52	5.08	16.76	13.22
08	29.06	7.62	19.30	15.76
10	31.60	10.16	21.84	18.30
14	36.68	15.24	26.92	23.38
16	39.22	17.78	29.46	25.92
20	44.30	22.86	34.54	31.00
26	51.92	30.48	42.16	38.62
30	57.00	35.56	47.24	43.70
34	62.08	40.64	52.32	48.78
40	69.70	48.26	59.94	56.40
50	82.40	60.96	72.64	69.10
60	95.10	73.66	85.34	81.80
64	100.18	78.74	90.42	86.88

ORDER INFORMATION

Product No.: KLS1-201-XX-S-B

Pos. No.
Ejector Header 2.54mm Series
Number of Contacts: XX=06-64Pin
Insulator Color: B=Black G=Gray
Tail Style: S=Straight Pin R=Right Pin

Box Header Series

KLS1-201 Ejector Header 2.54mm(0.100")

Electrical Characteristics:

Current Rating:1 AMP
Insulator Resistance: 5000MΩmin. at DC 500V
Contact Resistance: 20mΩmax. at DC 100mA
Operating Temperature: -45°C~+105°C

Material:

Housing:30% Glass filled PBT UL94V-0
Contacts: Brass
Plating: Gold plated:2u". over 50u" nickel

Features:

* Fully shrouded provides ultimate reliability,
* Black or gray insulator available.
* Choices of Eject lever.



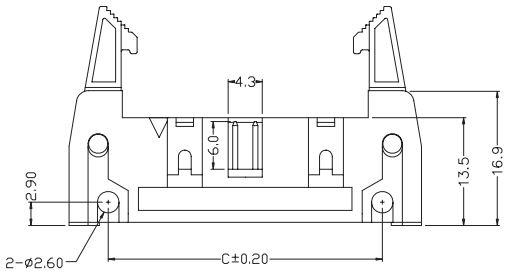

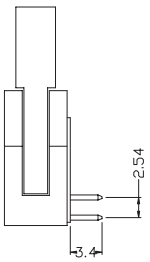

Right Angle Type

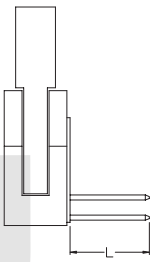

Long Dip

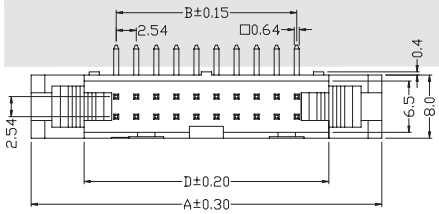

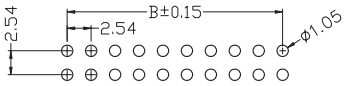

P.C.B Layout

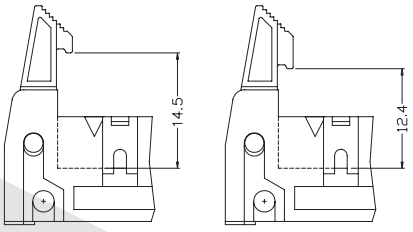

Long Lever Short Lever

Dimension

position	A	B	C	D
06	26.52	5.08	16.76	13.22
08	29.06	7.62	19.30	15.76
10	31.60	10.16	21.84	18.30
14	36.68	15.24	26.92	23.38
16	39.22	17.78	29.46	25.92
20	44.30	22.86	34.54	31.00
26	51.92	30.48	42.16	38.62
30	57.00	35.56	47.24	43.70
34	62.08	40.64	52.32	48.78
40	69.70	48.26	59.94	56.40
50	82.40	60.96	72.64	69.10
60	95.10	73.66	85.34	81.80
64	100.18	78.74	90.42	86.88

ORDER INFORMATION

Product No.: KLS1-201-XX-S-B

Pos. No.
Ejector Header 2.54mm Series
Number of Contacts: XX=06-64Pin
Insulator Color: B=Black G=Gray
Tail Style: S=Straight Pin R=Right Pin

Box Header Series

KLS1-201Y I.D.C. EJECTOR HEADER 2.54mm(0.100")

Electrical Characteristics:

Current Rating:1 AMP
Insulator Resistance: 5000MΩmin. at DC 500V
Contact Resistance: 20mΩmax. at DC 100mA
Operating Temperature: -45ºC~+105ºC



Material:

Housing:30% Glass filled PBT UL94V-0
Contacts: Brass
Plating:Selective gold plated : gold plated on mating area and nickel plated on wire Cutting area
Cable:1.27mm(0.050")pitch flat cable

Features:

* Fully shrouded provides ultimate reliability,
* Mounting ears optionai.

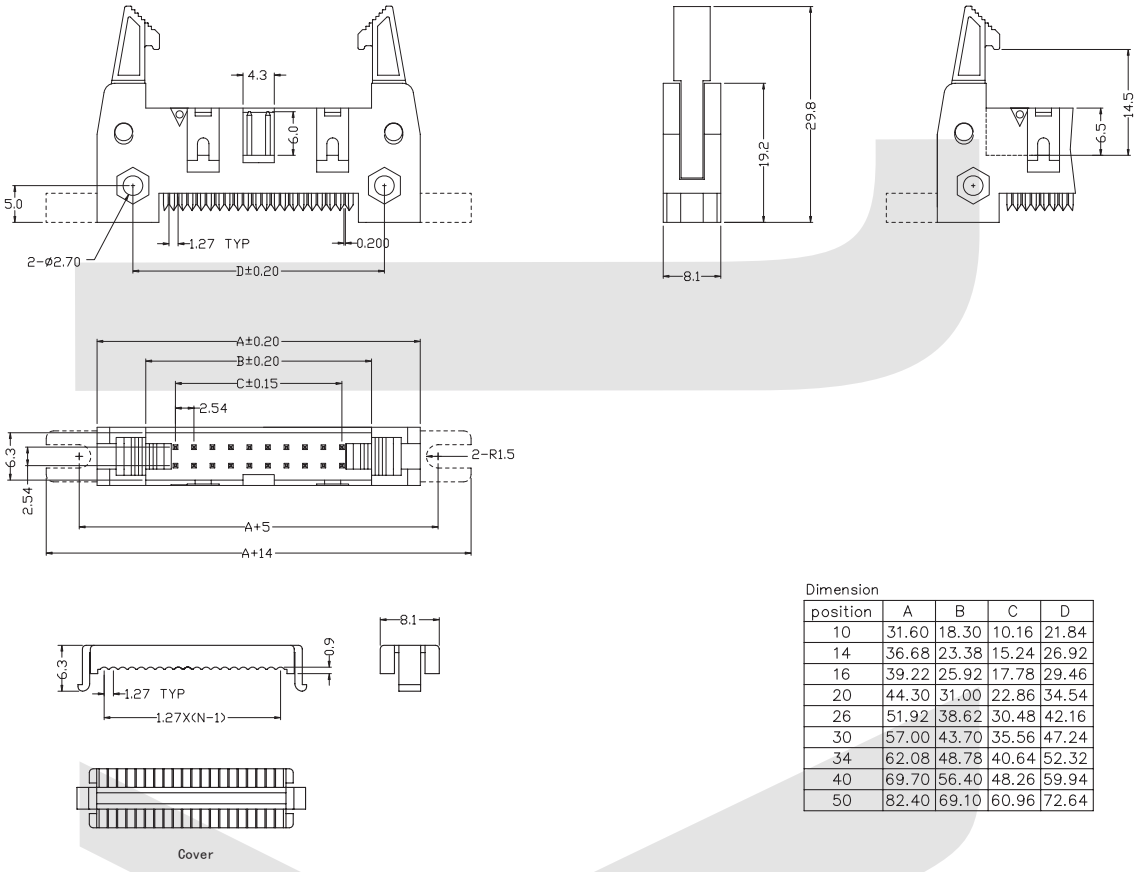

Dimension

position	A	B	C	D
10	31.60	18.30	10.16	21.84
14	36.68	23.38	15.24	26.92
16	39.22	25.92	17.78	29.46
20	44.30	31.00	22.86	34.54
26	51.92	38.62	30.48	42.16
30	57.00	43.70	35.56	47.24
34	62.08	48.78	40.64	52.32
40	69.70	56.40	48.26	59.94
50	82.40	69.10	60.96	72.64

ORDER INFORMATION

Product No.: KLS1-201Y-XX-B-E

Pos. No.
I.D.C. Ejector Header 2.54mm Series
Number of Contacts: XX=10~50Pin
Insulator Color: B=Black G=Gray
E=With Ears N=Without Ears

Box Header Series

KLS1-201Z I.D.C. Box Header 2.54mm(0.100")

Electrical Characteristics:

Current Rating:1 AMP
Insulator Resistance: 5000MΩmin. at DC 500V
Contact Resistance: 20mΩmax. at DC 100mA
Operating Temperature: -45°C~+105°C

Material:

Housing:30% Glass filled PBT UL94V-0
Contacts: Brass
Plating:Selective gold plated : gold plated on mating area and nickel plated on wire Cutting area
Cable:1.27mm(0.050")pitch flat cable

Features:

* Fully shrouded provides ultimate reliability,
* With polarization.
* Mounting ears optionai.

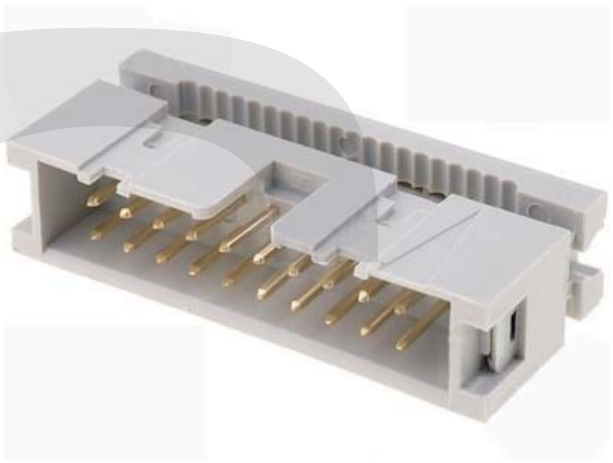

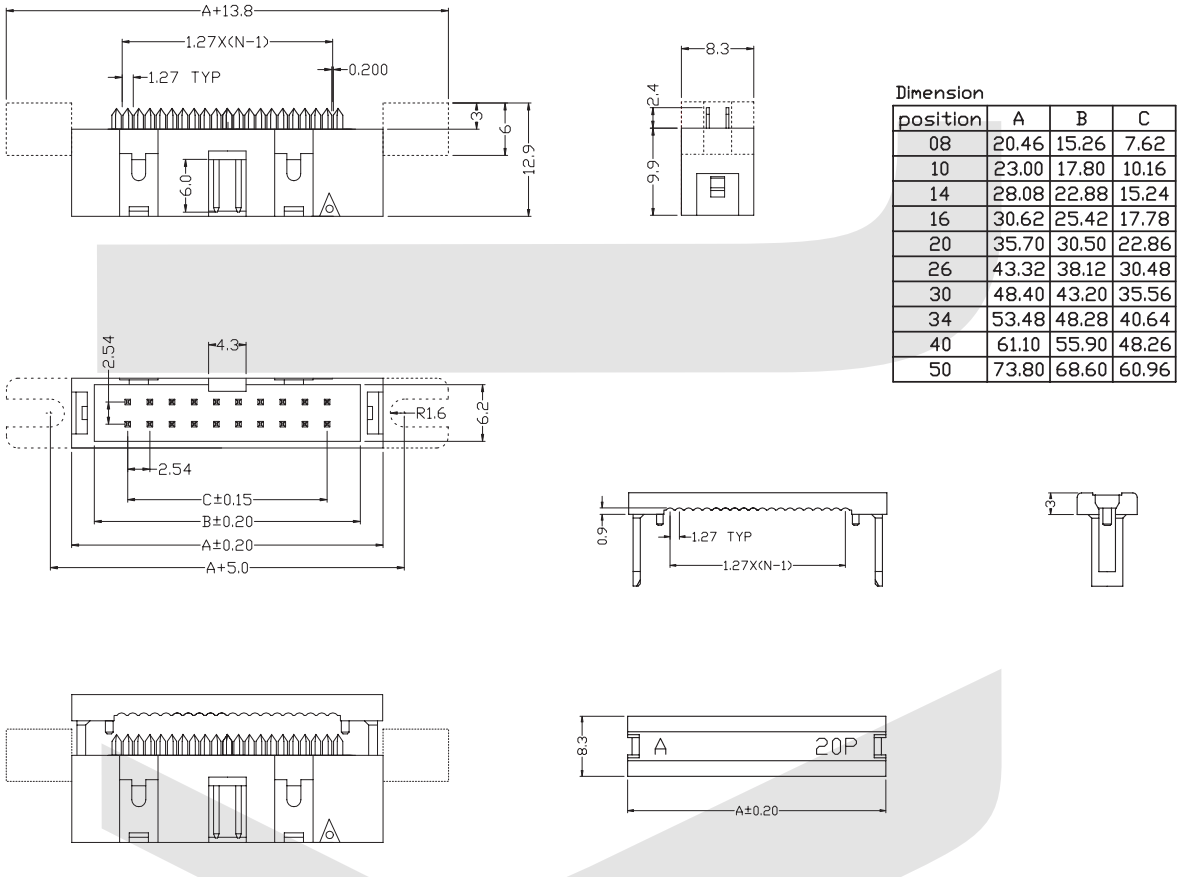

Dimension

position	A	B	C
08	20.46	15.26	7.62
10	23.00	17.80	10.16
14	28.08	22.88	15.24
16	30.62	25.42	17.78
20	35.70	30.50	22.86
26	43.32	38.12	30.48
30	48.40	43.20	35.56
34	53.48	48.28	40.64
40	61.10	55.90	48.26
50	73.80	68.60	60.96

ORDER INFORMATION

Product No.: KLS1-201Z-XX-B-E

Pos. No.
I.D.C. Box Header 2.54mm Series
Number of Contacts: XX=08-50Pin
Insulator Color: B=Black G=Gray
E=With Ears N=Without Ears

I.D.C Socket Series

I

KLS1-204C I.D.C SOCKET 1.27mm (0.050")

Electrical Characteristics:

Current Rating: 1 AMP
Insulator Resistance: 1000M Ohm min. at DC 500V
Contact Resistance: 30m Ohm max. at DC 100mA
Operating Temperature: -45°C~+105°C

Material:

Housing: 30% Glass filled PBT UL94V-0
Contacts: Brass or Phosphor Bronze
Plating: Selective gold plated: gold plated on mating area and Nickel plated on wire cutting area
Gold plated: 3u" over 50u" nickel
Cable: 0.635mm (0.050") pitch flat cable

Features:

* Optional polarizing key, polarizing bump.
* Optional strain relief.



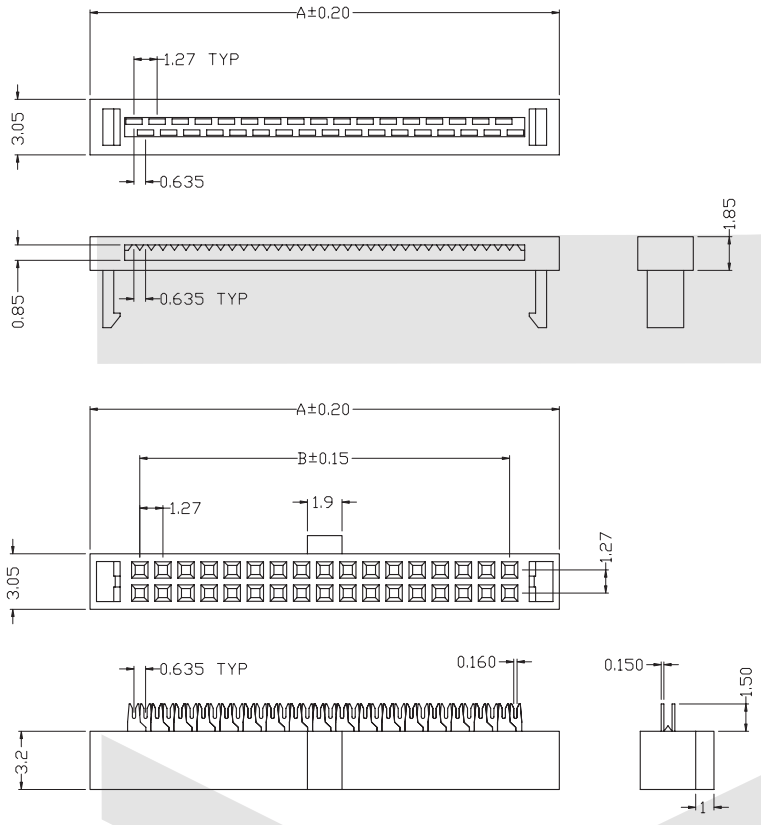

Dimension

Position	A	B
08	9.27	3.81
10	10.54	5.08
12	11.81	6.35
14	13.08	7.62
16	14.35	8.89
20	16.89	11.43
24	19.43	13.97
26	20.70	15.24
30	23.24	17.78
34	25.78	20.32
40	29.59	24.13
44	32.13	26.67
50	35.94	30.48
60	42.29	36.83
80	54.99	49.53

ORDER INFORMATION

Product NO.: KLS1-204C-XX-B

Pos. NO.
I.D.C SOCKET 1.27*1.27mm Series
Insulator Color: B=Black G=Gray L=Blue
Number of Contacts: XX=06-80Pin

I.D.C Socket Series

KLS1-204D I.D.C SOCKET 1.27*2.54mm

Electrical Characteristics:

Current Rating: I AMP
Insulator Resistance: 1000M Ohm min. at DC 500V
Contact Resistance: 30m Ohm max. at DC 100mA
Operating Temperature: -45ºC~+105ºC



Material:

Housing: 30% Glass filled PBT UL94V-0
Contacts: Brass or Phosphor Bronze
Plating: Selective gold plated: gold plated on mating area
and nickel plated on wire Cutting area
Gold plated: 3u" over 50u" nickel
Cable: 0.635mm (0.050") pitch flat cable

Features:

* Optional polarizing key, polarizing bump.
* Optional strain relief.

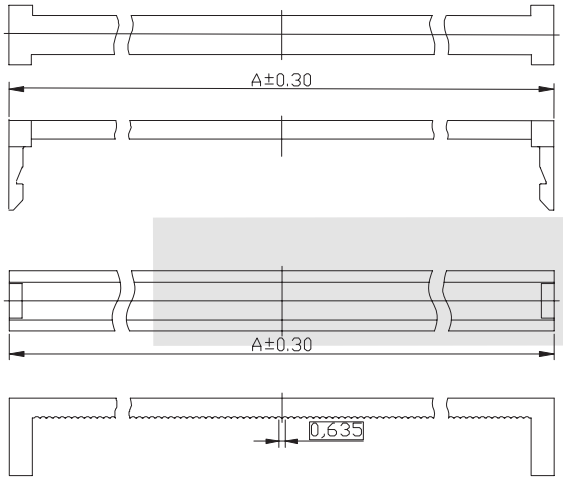

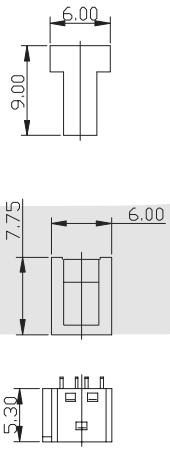

Number of Position	DIMENSIONS		
	A	B	C
10	11.25	8.35	5.08
14	13.79	10.89	7.62
16	15.06	12.16	8.89
20	17.60	14.70	11.43
22	18.87	15.97	12.70
26	21.41	18.51	15.24
30	23.95	21.05	17.78
34	26.49	23.59	20.32
40	30.30	27.40	24.13
44	32.84	29.94	26.67
50	36.65	33.75	30.48
60	43.00	40.10	36.83
68	48.08	45.18	41.91
80	55.70	52.80	49.53
100	68.40	65.50	62.23

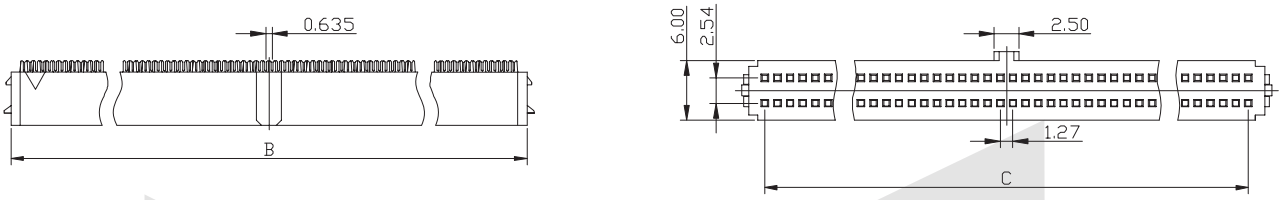

ORDER INFORMATION

Product NO.: KLS1-204D-XX-B

Pos. NO.
I.D.C SOCKET 1.27*2.54mm Series
Insulator Color: B=Black G=Gray L=Blue
Number of Contacts: XX=10-100Pin

I.D.C Socket Series

I

KLS1-204B I.D.C SOCKET 2.00mm (0.079")

Electrical Characteristics:

Current Rating: 1 AMP
Insulator Resistance: 5000M Ohm min. at DC 500V
Contact Resistance: 20m Ohm max. at DC 100mA
Operating Temperature: -45°C~+105°C



Material:

Housing: 30% Glass filled PBT UL94V-0
Contacts: Brass or Phosphor Bronze
Plating: Selective gold plated: gold plated on mating area and Nickel plated on wire cutting area
Gold plated: 3u" over 50u" nickel
Cable: 1.00mm (0.039") pitch flat cable

Features:

* Optional polarizing key, polarizing bump.
* Optional strain relief.

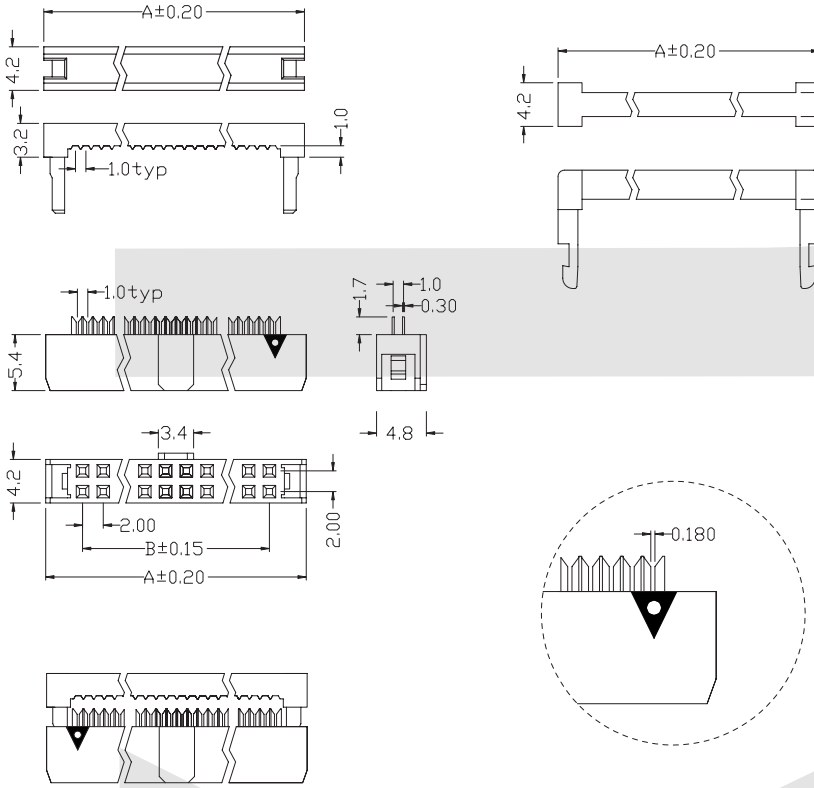

Position	Dimension	
	A	B
10	15.10	8.00
14	19.10	12.00
16	21.10	14.00
18	23.10	16.00
20	25.10	18.00
22	27.10	20.00
24	29.10	22.00
26	31.10	24.00
30	35.10	28.00
34	39.10	32.00
40	45.10	38.00
44	49.10	42.00
50	55.10	48.00

ORDER INFORMATION

Product NO.: KLS1-204B-XX-B

Pos. NO.
I.D.C SOCKET 2.0mm Series
Insulator Color: B=Black G=Gray L=Blue
Number of Contacts: XX=08-64Pin

I.D.C Socket Series

KLS1-204 I.D.C SOCKET 2.54mm (0.10")

Electrical Characteristics:

Current Rating: 1 AMP
Insulator Resistance: 5000M Ohm min. at DC 500V
Contact Resistance: 20m Ohm max. at DC 100mA
Operating Temperature: -45°C~+105°C



Material:

Housing: 30% Glass filled PBT UL94V-0
Contacts: Brass or Phosphor Bronze
Plating: Selective gold plated: gold plated on
mating area and nickel plated on wire cutting area
Gold plated: 3u" over 50u" nickel
Cable: 1.27mm (0.050") pitch flat cable

Features:

* Optional polarizing key, polarizing bump.
* Optional strain relief.

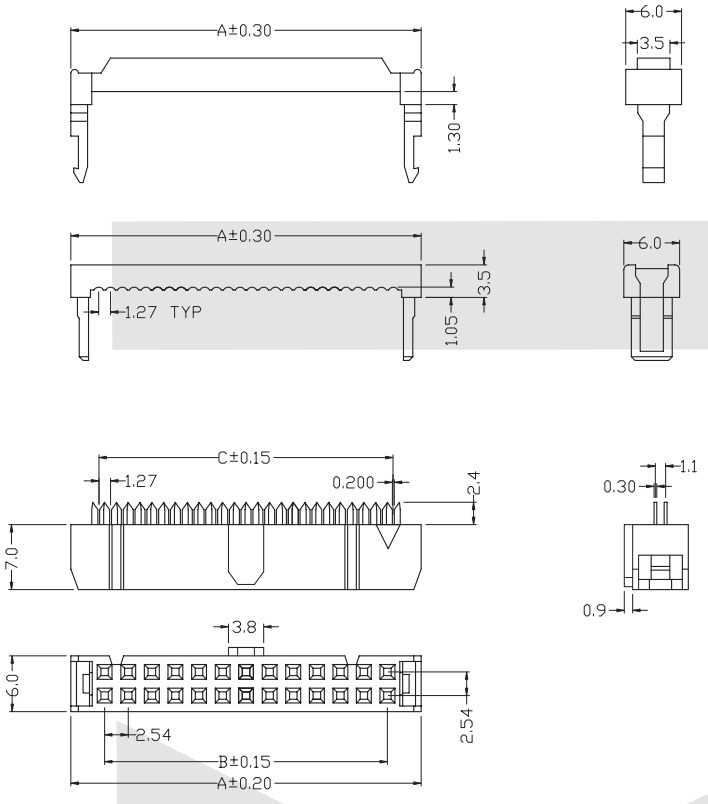

Dimension

Position	A	B	C
06	12.22	5.08	6.35
08	14.76	7.62	8.89
10	17.30	10.16	11.43
14	22.38	15.24	16.51
16	24.92	17.78	19.05
20	30.00	22.86	24.13
24	35.08	27.94	29.21
26	37.62	30.48	31.75
30	42.70	35.56	36.83
34	47.78	40.64	41.91
40	55.40	48.26	49.53
50	68.10	60.96	62.23
60	80.80	73.66	74.93
64	85.88	78.74	80.01

ORDER INFORMATION

Product NO.: KLS1-204-XX-B

Pos. NO.
I.D.C SOCKET Series
Insulator Color: B=Black G=Gray L=Blue
Number of Contacts: XX=06-64Pin

DIP PLUG Series

KLS1-205B DIP PLUG 2.00mm(0.079″)/MF.D扁平电缆连接器

Electrical Characteristics:

Current Rating:1 AMP
Insulator Resistance: 5000MΩmin. at DC 500V
Contact Resistance: 20mΩmax. at DC 100mA
Operating Temperature: -45ºC~+105ºC



Material:

Housing:30% Glass filled PBT UL94V-0
Contacts: Phosphor Bronze
Plating: Gold plated:2u". over 50u" nickel
Tin plated:100u". over 50u" nickel
Cable:1.00mm(0.039″) pitch flat cable

Features:

* Fast connection of flat cable to PC board.
* Plug directly into 2.00mmX2.00mm PC board.

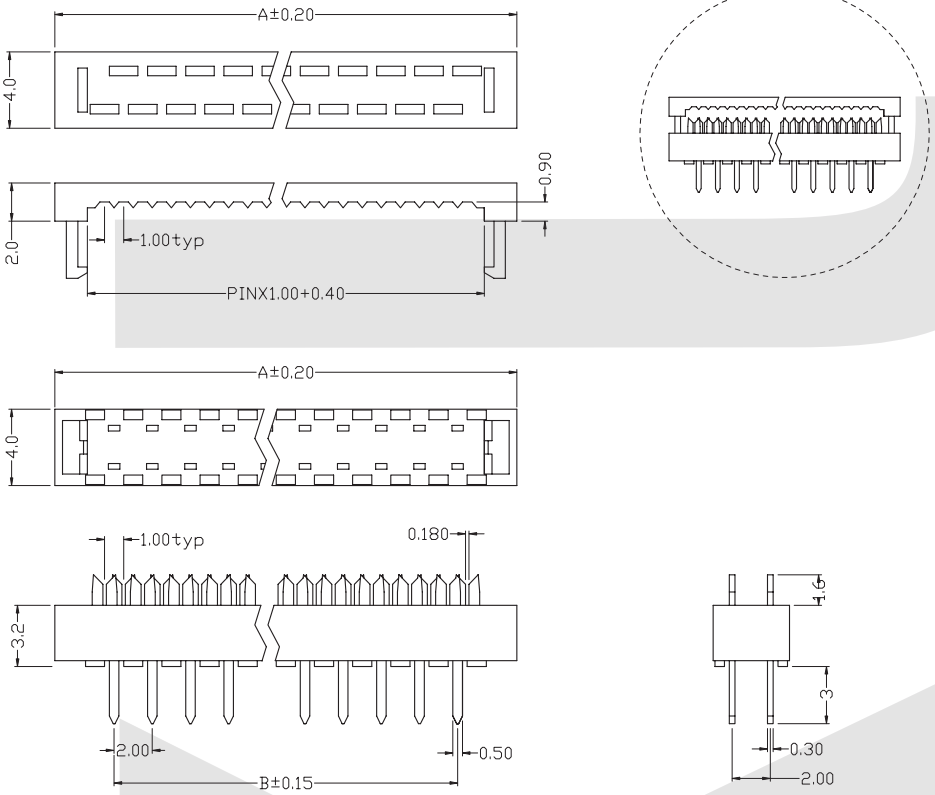

Dimension

Position	A	B
08	12.20	6.00
10	14.20	8.00
12	16.20	10.00
16	20.20	14.00
18	22.20	16.00
20	24.20	18.00
22	26.20	20.00
24	28.20	22.00
26	30.20	24.00
30	34.20	28.00
34	38.20	32.00
40	44.20	38.00
44	48.20	42.00
50	54.20	48.00

P.C.B Layout

ORDER INFORMATION

Product No.: KLS1-205B-XX-B

Pos. No.
DIP PLUG 2.00mm Series
Insulator Color: B=Black G=Gray
Number of Contacts: XX=10-50Pin

DIP PLUG Series

KLS1-205 DIP PLUG 2.54mm(0.100″)/DC4(F.D)扁平电缆连接器

Electrical Characteristics:

Current Rating:1 AMP
Insulator Resistance: 5000MΩmin. at DC 500V
Contact Resistance: 20mΩmax. at DC 100mA
Operating Temperature: -45ºC~+105ºC

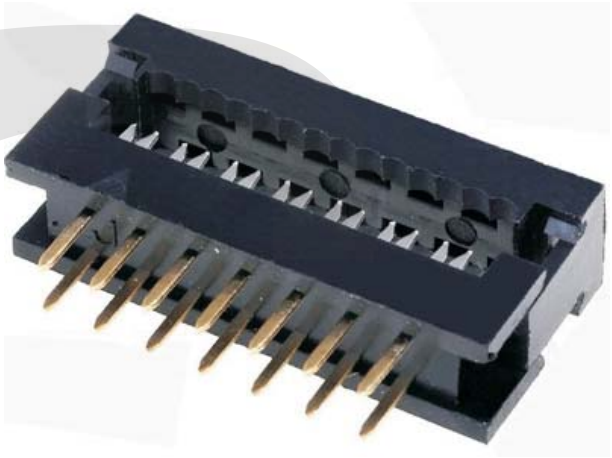

Material:

Housing:30% Glass filled PBT UL94V-0
Contacts: Brass or Phosphor Bronze
Plating: Selective gold plated:gold plated on mating area and nickel pleated on wire cutting area
Gold plated:2u". over 50u" nickel
Tin plated:100u". over 50u" nickel
Cable:1.27mm(0.050″) pitch flat cable

Features:

* Fast connection of flat cable to PC board.
* Recommended 28AWG 1.27mm(0.05″) fiat cable.
* Plug directly into 2.54mmX2.54mm PC board.

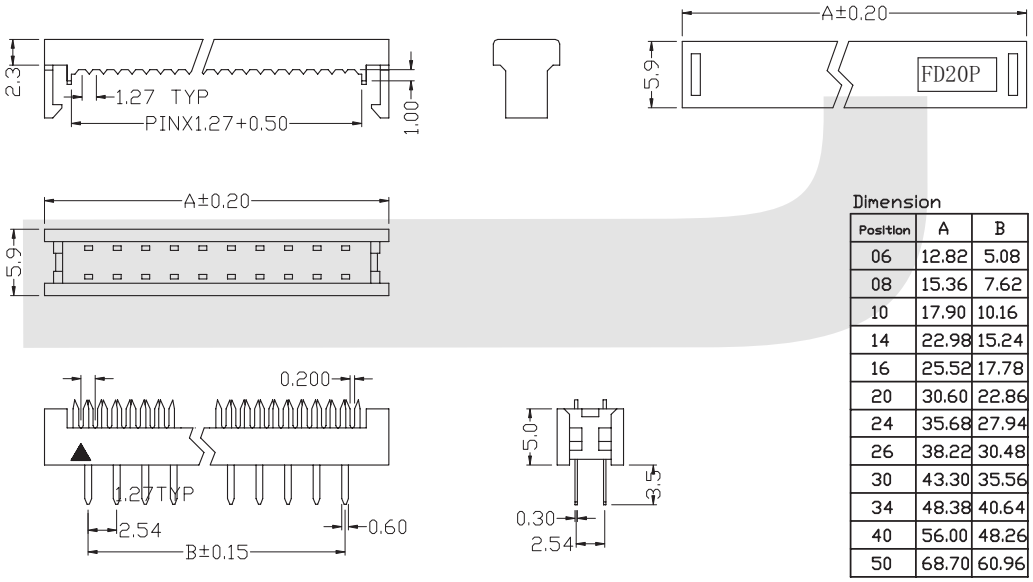

Dimension

Position	A	B
06	12.82	5.08
08	15.36	7.62
10	17.90	10.16
14	22.98	15.24
16	25.52	17.78
20	30.60	22.86
24	35.68	27.94
26	38.22	30.48
30	43.30	35.56
34	48.38	40.64
40	56.00	48.26
50	68.70	60.96



P.C.B Layout

ORDER INFORMATION

Product No.: KLS1-205-XX-B

Pos. No.
DIP PLUG 2.54mm Series
Insulator Color: B=Black G=Gray
Number of Contacts: XX=06-50Pin

DIP PLUG Series

KLS1-205X DIP PLUG 2.54mm(0.100″)/SYD扁平电缆连接器

Electrical Characteristics:

Current Rating:1 AMP
Insulator Resistance: 5000MΩmin. at DC 500V
Contact Resistance: 20mΩmax. at DC 100mA
Operating Temperature: -45ºC~+105ºC



Material:

Housing:30% Glass filled PBT UL94V-0
Contacts: Brass or Phosphor Bronze
Plating:Selective gold plated:gold plated on mating area and nickel plated on wire cutting area
Gold plated:2u". over 50u" nickel
Tin plated:100u". over 50u" nickel
Cable:1.27mm(0.050″) pitch flat cable

Features:

* Recommended 28AWG 1.27mm(0.050″) flat cable.
* Plug directly into PCB.

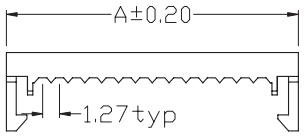

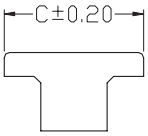

Dimension

position	A	B	C	D
14	22.00	15.24	10.60	7.62
16	24.54	17.78	10.60	7.62
18	27.08	20.32	10.60	7.62
20	29.62	22.86	10.60	7.62
24	34.70	27.94	18.20	15.24
28	29.78	33.02	18.20	15.24
32	44.86	38.10	18.20	15.24
40	54.98	48.26	18.20	15.24

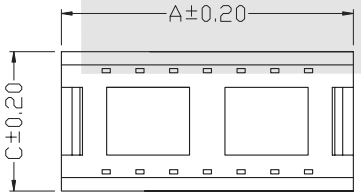

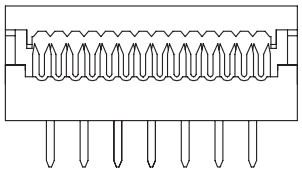

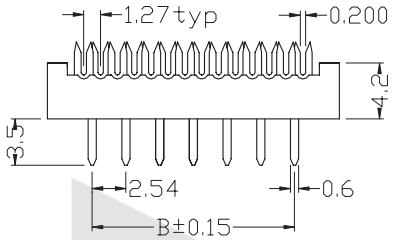

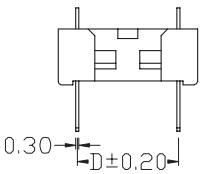

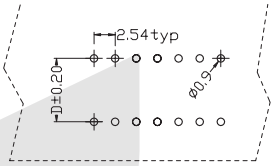

P.C.B Layout

ORDER INFORMATION

Product No.: KLS1-205X-XX-B

Pos. No.
Dip Plug 2.54mm SYD Series
Insulator Color: B=Black G=Gray
Number of Contacts: XX=14-40Pin

I.D.C Socket Series

KLS1-204E Connectors micro-match 2.54mm

Electrical Characteristics:

Current Rating: 1 AMP
Insulator Resistance: 1000M Ohm min. at DC 250V
Contact Resistance: 20m Ohm max. at DC 100mA
Operating Temperature: -45ºC~+105ºC

Material:

Housing: PBT UL94V-0
Contacts: Brass
Plating: Selective gold plated: gold plated on mating area and Nickel plated on wire cutting area
Gold plated: 3u" over 50u" nickel
Cable: 1.27mm (0.050") pitch flat cable

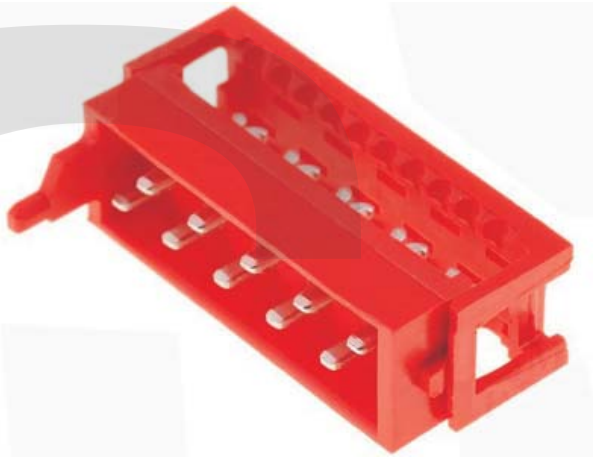

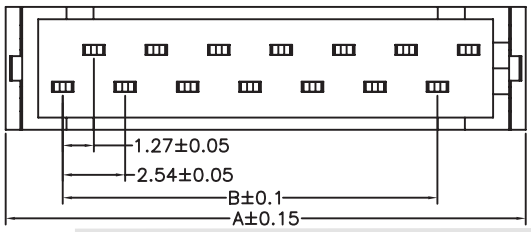

Part No.	Dimension	
	A	B
04	8.45	2.54
06	10.99	5.08
08	13.53	7.62
10	16.07	10.16
12	18.61	12.70
14	21.15	15.24
16	23.69	17.78
18	26.23	20.32
20	28.77	22.86



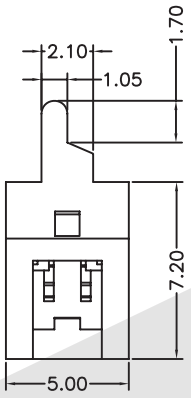

ORDER INFORMATION

Product NO.: KLS1-204E-XX-R

Pos. NO.
Connectors micro-match 2.54mm Series
Insulator Color: R=Red
Number of Contacts: XX=06-26Pin

I.D.C Socket Series

KLS1-204F Connectors micro-match 2.54mm

Electrical Characteristics:

Current Rating: 1 AMP
Insulator Resistance: 1000M Ohm min. at DC 250V
Contact Resistance: 20m Ohm max. at DC 100mA
Operating Temperature: -45°C~+105°C

Material:

Housing: PBT UL94V-0
Contacts: Brass
Plating: Selective gold plated: gold plated on mating area and Nickel plated on wire cutting area
Gold plated: 3u" over 50u" nickel
Cable: 1.27mm (0.050") pitch flat cable



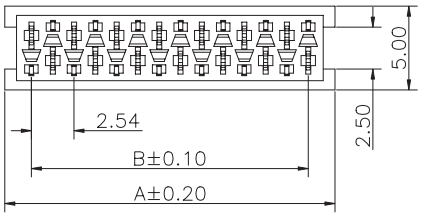

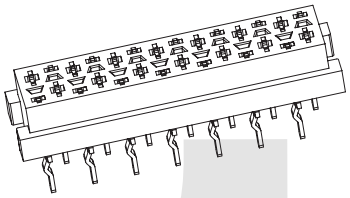

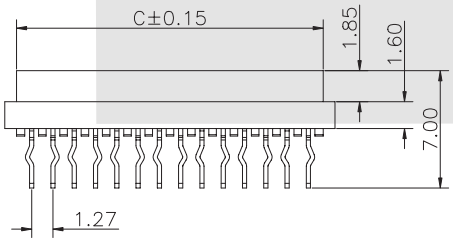

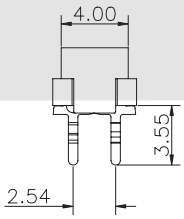

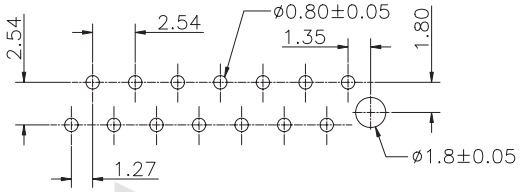

PCB Layout

Part No.	A	B	C
04	7.00	3.81	5.60
06	9.54	6.35	8.14
08	12.08	8.89	10.68
10	14.62	11.43	13.22
12	17.16	13.97	15.76
14	19.70	16.51	18.30
16	22.24	19.05	20.84
18	24.78	21.59	23.38
20	27.32	24.13	25.92
22	29.86	26.67	28.46
24	32.40	29.21	31.00
26	34.94	31.75	33.54

ORDER INFORMATION

Product NO.: KLS1-204F-XX-R

Pos. NO.
Connectors micro-match 2.54mm Series
Insulator Color: R=Red
Number of Contacts: XX=06-26Pin

I.D.C Socket Series

KLS1-204G Connectors micro-match 2.54mm

Electrical Characteristics:

Current Rating: 1 AMP
Insulator Resistance: 1000M Ohm min. at DC 250V
Contact Resistance: 20m Ohm max. at DC 100mA
Operating Temperature: -45°C~+105°C

Material:

Housing: PBT UL94V-0
Contacts: Brass
Plating: Selective gold plated: gold plated on mating area and Nickel plated on wire cutting area
Gold plated: 3u" over 50u" nickel
Cable: 1.27mm (0.050") pitch flat cable



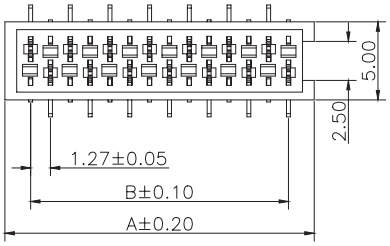

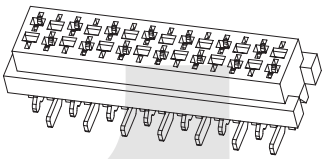

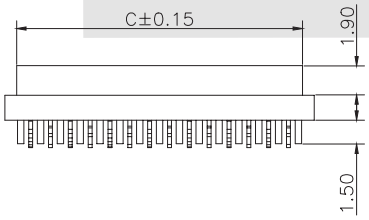

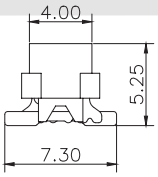

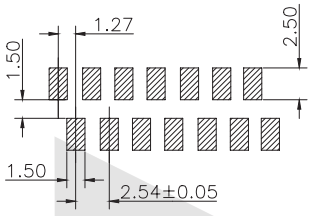

Part No.	A	B	C
04	7.10	3.81	5.60
06	9.64	6.35	8.14
08	12.18	8.89	10.68
10	14.72	11.43	13.22
12	17.26	13.97	15.76
14	19.80	16.51	18.30
16	22.34	19.05	20.84
18	24.88	21.59	23.38
20	27.42	24.13	25.92

ORDER INFORMATION

Product NO.: KLS1-204G-XX-R

Pos. NO.
Connectors micro-match 2.54mm SMD Series
Insulator Color: R=Red
Number of Contacts: XX=06-26Pin

I.D.C Socket Series

KLS1-204M Connectors micro-match 2.54mm

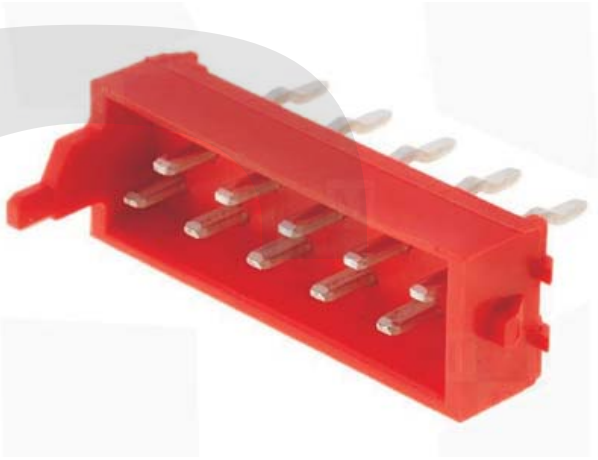

Electrical Characteristics:

Current Rating: 1 AMP
Insulator Resistance: 1000M Ohm min. at DC 250V
Contact Resistance: 20m Ohm max. at DC 100mA
Operating Temperature: -45°C~+105°C

Material:

Housing: PBT UL94V-0
Contacts: Brass
Plating: Selective gold plated: gold plated on mating area and Nickel plated on wire cutting area
Gold plated: 3u" over 50u" nickel
Cable: 1.27mm (0.050") pitch flat cable

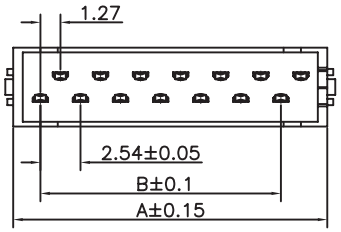

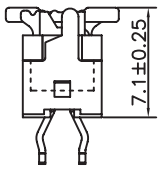

Mating Height Draw.

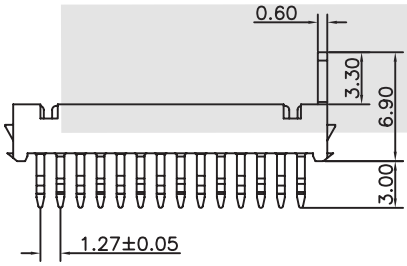

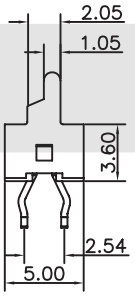

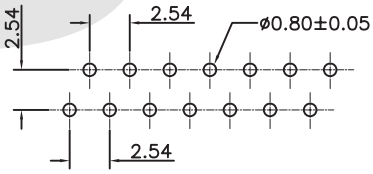

PCB Layout

Part No.	Dimension		Part No.	Dimension		Part No.	Dimension	
	A	B		A	B		A	B
04	7.20	2.54	12	17.36	12.70	20	27.52	22.86
06	9.74	5.08	14	19.90	15.24	22	30.06	25.40
08	12.28	7.62	16	22.44	17.78	24	32.60	27.94
10	14.82	10.16	18	24.98	20.32	26	35.14	30.48

ORDER INFORMATION

Product NO.: KLS1-204M-XX-R

Pos. NO.
Connectors micro-match 2.54mm Series
Insulator Color: R=Red
Number of Contacts: XX=06-26Pin

I.D.C Socket Series

KLS1-204FR Connectors micro-match 2.54mm

Electrical Characteristics:

Current Rating: 1 AMP
Insulator Resistance: 1000M Ohm min. at DC 250V
Contact Resistance: 20m Ohm max. at DC 100mA
Operating Temperature: -45ºC~+105ºC

Material:

Housing: PBT UL94V-0
Contacts: Brass
Plating: Selective gold plated: gold plated on mating area and Nickel plated on wire cutting area
Gold plated: 3u" over 50u" nickel
Cable: 1.27mm (0.050") pitch flat cable

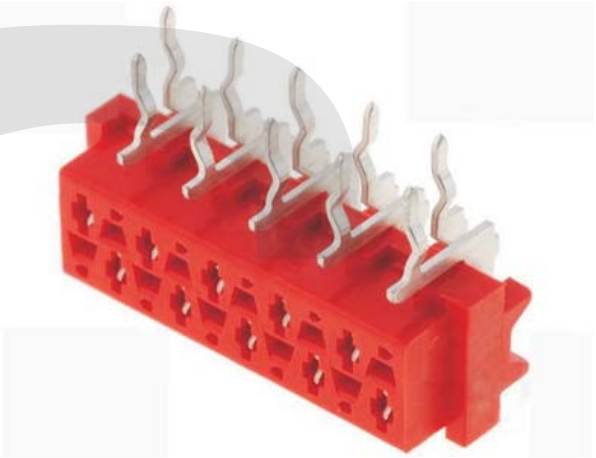

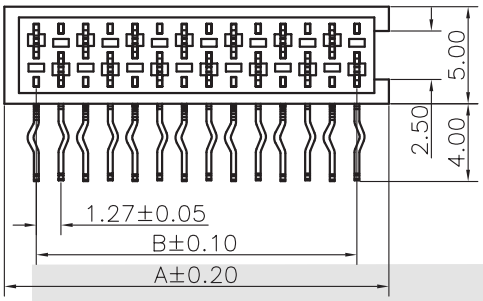

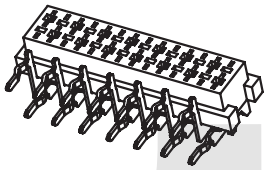

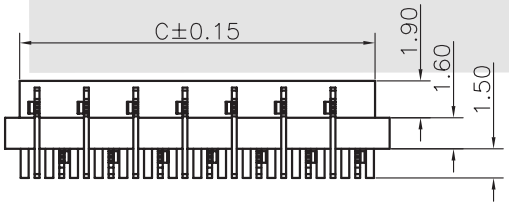

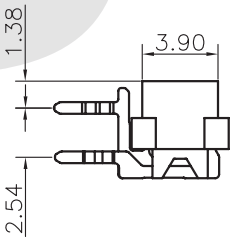

Part No.	A	B	C	Part No.	A	B	C
04	7.00	3.81	5.60	16	22.24	19.05	20.84
06	9.54	6.35	8.14	18	24.78	21.59	23.38
08	12.08	8.89	10.68	20	27.32	24.13	25.92
10	14.62	11.43	13.22	22	29.86	26.67	28.46
12	17.16	13.97	15.76	24	32.40	29.21	31.00
14	19.70	16.51	18.30	26	34.94	31.75	33.54

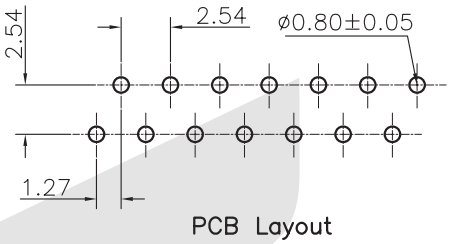

PCB Layout

ORDER INFORMATION

Product NO.: KLS1-204FR-XX-R

Pos. NO.
Connectors micro-match 2.54mm Series
Insulator Color: R=Red
Number of Contacts: XX=06-26Pin

I.D.C Socket Series

KLS1-204A Connectors micro-match 2.54mm

Electrical Characteristics:

Current Rating: 1 AMP
Insulator Resistance: 1000M Ohm min. at DC 250V
Contact Resistance: 20m Ohm max. at DC 100mA
Operating Temperature: -45°C~+105°C

Material:

Housing: PBT UL94V-0
Contacts: Brass
Plating: Selective gold plated: gold plated on mating area and Nickel plated on wire cutting area
Gold plated: 3u" over 50u" nickel
Cable: 1.27mm (0.050") pitch flat cable

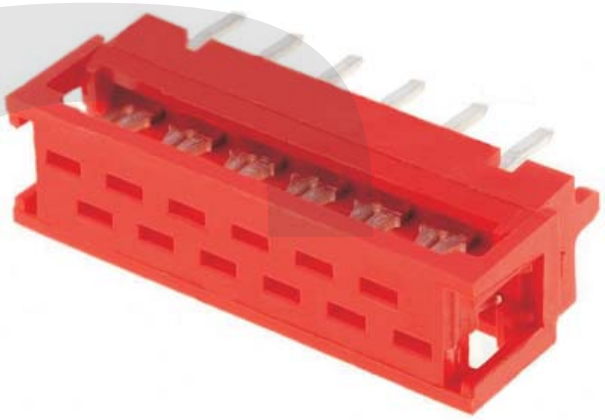

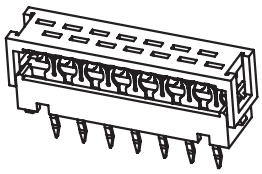

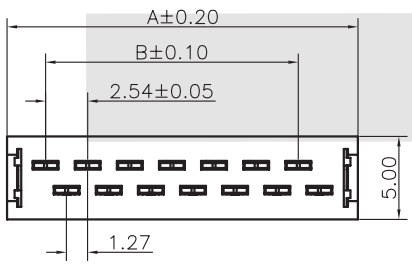

Part No.	Dimension	
	A	B
04	8.45	2.54
06	10.99	5.08
08	13.53	7.62
10	16.07	10.16
12	18.61	12.70
14	21.15	15.24
16	23.69	17.78
18	26.23	20.32
20	28.77	22.86
22	31.31	25.40
24	33.85	27.94
26	36.39	30.48

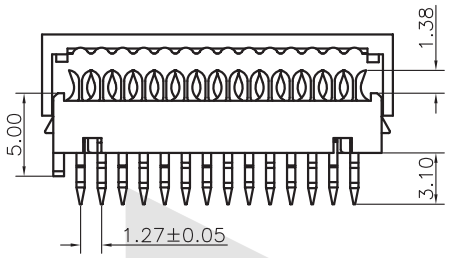

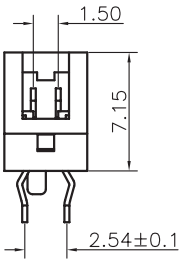

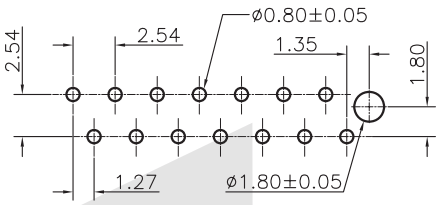

PCB Layout

ORDER INFORMATION

Product NO.: KLS1-204A-XX-R

Pos. NO.
Connectors micro-match 2.54mm Series
Insulator Color: R=Red
Number of Contacts: XX=06-26Pin

FFC/FPC Connectors

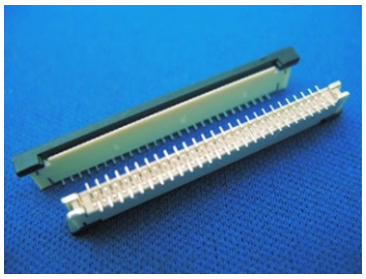

I

P/N:KLS1-FPC-050-01/0.50mm FPC socket pcb SMT180 Zif-lock

1:Electrical Characteristics:

Voltage:	50v max
Current:	0.5A max
Dielectric with standing voltage:	250 vac
Insulation resistance:	50 Megaohms min.
Contact resistance:	20 Milliohms max

2:Material

Housing:	high-temp. PA4/6
Actuator:	high-temp. PA9T
Contact:	phosphor bronze. Plating: all tin, lead free C5191
Holdown: brass.	Plating: all tin, lead free C2680
Cap:	brass. Plaing: Ni

3:Drawing:

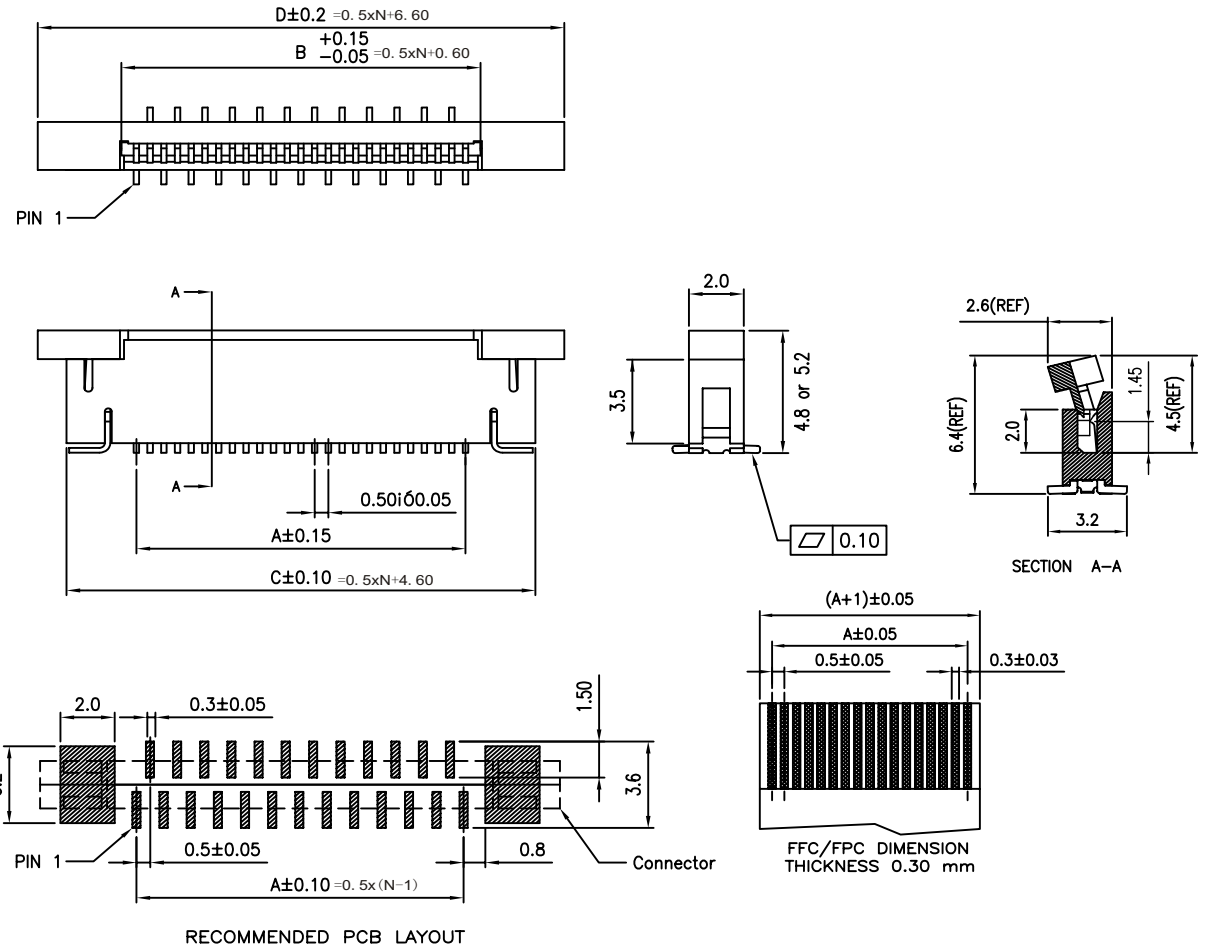

ORDERINFORMATION

Product No: KLS1-FPC050-01-xx

Series No.

No. Of pins (04~60 pins)

RoHS Compliant

REV	DESCRIPTION	APPRO.	CHANGE	DATE
A0	原始尺寸			

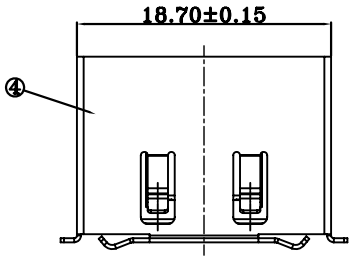

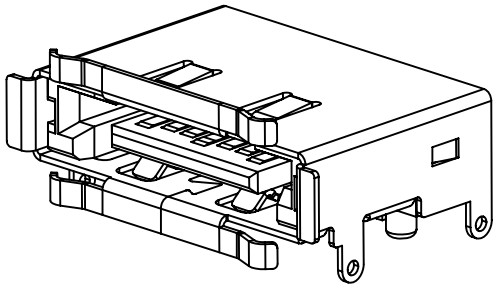

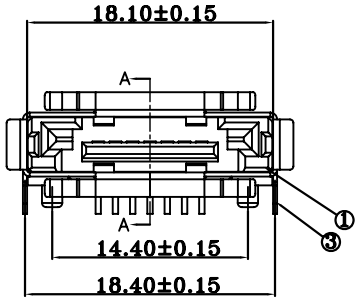

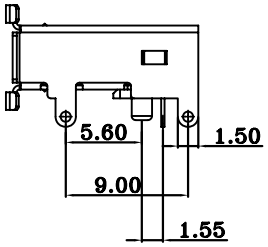

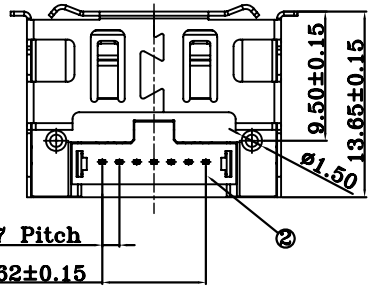

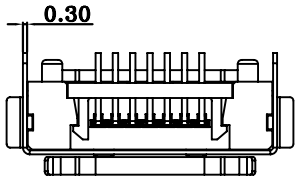

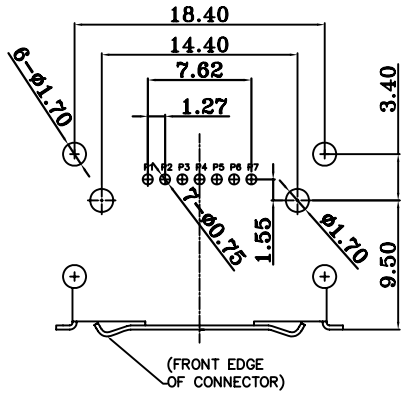

RECOMMENDED PC BOARD LAYOUT

SPECIFICATION:
MATERIAL:
HOUSING:PA6T 30% GF UL 94V-0
COLOR:BLACK
CONTACT:Bronze C5191-H,T=0.25mm
SHELL:BRASS C2680R-H,T=0.30mm
FINISH
CONTACT:3u"GOLD/TIN PLATING ON CONTACT AREA
100u"MIN.TIN-LEAD PLATING ON SOLDERTAILS
50u"MIN.NICKEL UNDERPLATING OVERALL
PEG:100u"MIN.TIN-LEAD PLATING ON SOLDERTAILS
50u"MIN.NICKEL UNDERPLATING OVERALL

QUALITY SYMBOLS	GENERAL TOLERANCES (UNLESS SPECIFIED)			
		MM		INCH
▼ "0	0~5	±0.10	0~5	----
	5~10	±0.15	5~10	----
	10~20	±0.20	10~20	----
C "0	20~	±0.25	20~	----
	ANGULAR			

SIGNATORY		DATE
DRAW		
DESIGN		
CHECK		
APPRO.		

KLS Electronic co.,LTD

E	TITLE: E_SATA 7P - E (DIP Type)		
PART NO.			
DWG NO.			
(OLD)PART NO.	———		
SCALE 1:1	UNIT:mm	A4	SHEET: 1of 1

THIS DRAWING CONTAINS INFORMATION THAT IS PROPRIETAPY TO *** INCORPORATED AND SHOULD NOT BE USED WITHOUT WRITTEN PERMISSION

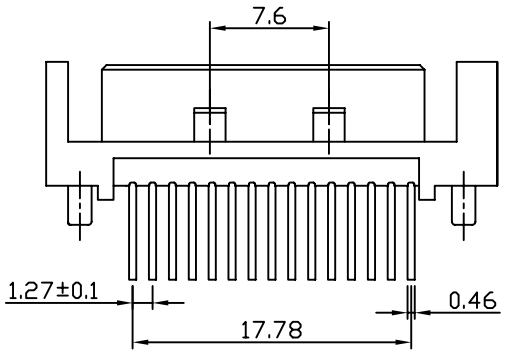

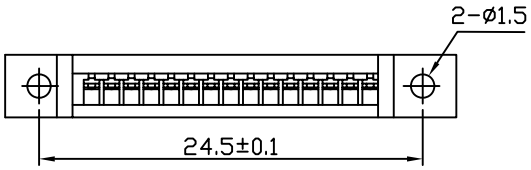

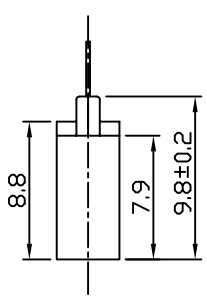

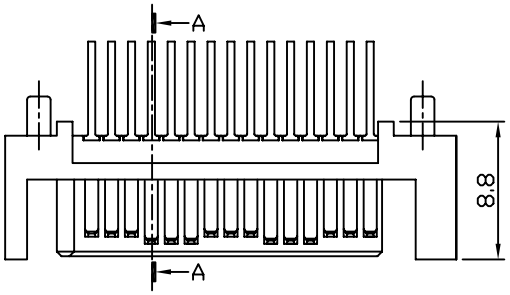

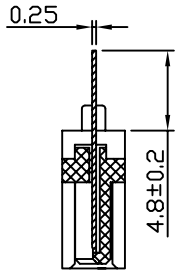

A-A SECTION

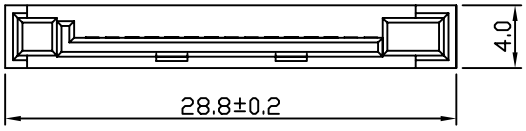

SPECIFICATIONS

1.MATERIAL:
- Housig: LCP UL 94V-0
- Color: Black
- Contact: Phosphor bronze
- Peg: Brass

2.FINISH:
- Contact: 3u" Gold/Tin platig on contact area
  100u" min.Tin-Lead Plating on soldertails
  50u" min.Nickel underplating over all
- PEG: 100u"min.Tin-Lead plating on soldertails
  50u"min.Nickel underplating over all

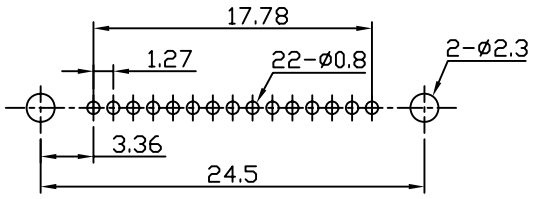

PCB LAYOUT

UNLESS OTHEWIXE SPECIFIED TOLERANCE ANG ±5° 0 ±0.3 .0 ±0.2 .00 ±0.05	KLS Electronic co.,LTD
SCALE	UNIT: mm
DRAWN LI BEI LIN	30/10/08
CHECKED	
APPROVED	/ /
SIZE A4 REV A	
DRAWM NAME: SATA 15Pin	
PROUCT NO.	
PILE NAME:	

SATA 15P 180度 公座

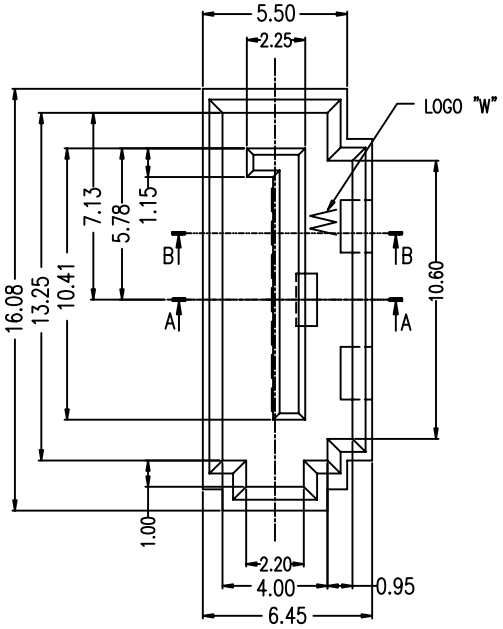

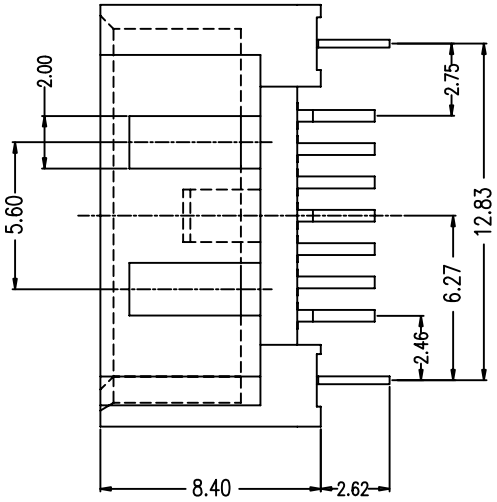

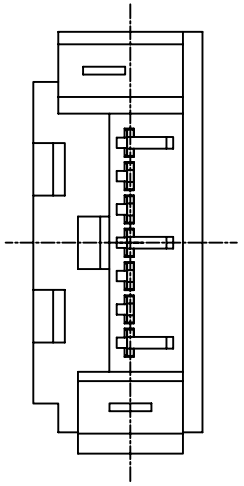

NOTES:

*Material
Housing: LCP or Nylon46,UL 94V-0 rated,Color:Black.
Color: Brass
Contact: Brass
Plating: Gold Over Nickel on Contact Area;
Tin Platng on Solder Tail

*Mechanical
Insertion Force: 45N Max
Withdrawal Force:10N Min
Durability: 500Cycles

*Electrical Specification
Current Rating: 1.5Ampere per contact
Contact Resistance: 30Milliohms max
Insulation Resistance: 1000 megohms min
Dieletric Withstanding Voltage:500V AC

*Environmental
Operating Temperature:-55° C to +125° C

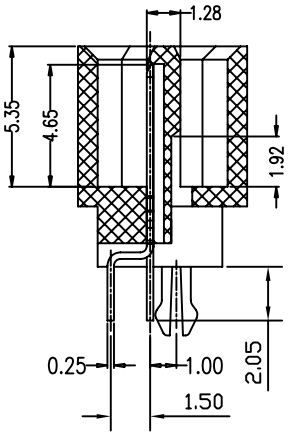

SECT A-A

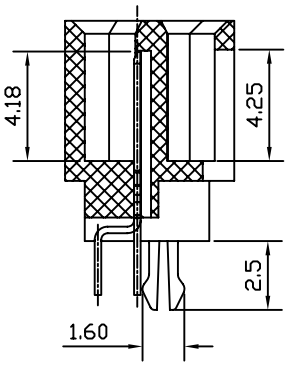

SECT B-B

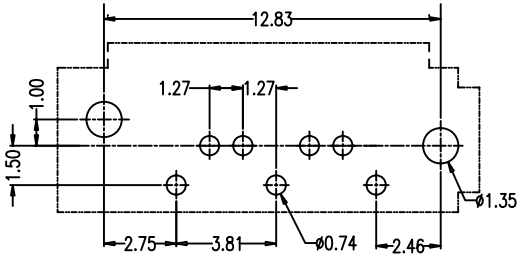

P.C.B. Layout
(T=1.60mm)

UNLESS OTHEWIXE SPECIFIED TOLERANCE			
x.	±0.3	x.°	±5°
x.x	±0.2	x.x°	±1°
x.xx	±0.1	x.xx°	±0.5°

SCALE		UNIT	mm
DRAWN	LI BEI LIN		17/01/08
CHECKED			
APPROVED			/ /
		SIZE	A4
		REV	A

KLS Electronic co.,LTD

DRAWM NAME

PROUCT NO.

PILE NAME:

SATA 7Pin 全包 B型

SPECIFICATIONS

1.MATERIAL:
- Housig: LCP UL 94V-0
- Color: Black
- Contact: Phosphor bronze
- Peg: Brass

2.FINISH:
- Contact: 3u" Gold/Tin platig on contact area
- 100u" min.Tin-Lead Plating on soldertails
- 50u" min.Nickel underplating over all
- PEG: 100u"min.Tin-Lead plating on soldertails
- 50u"min.Nickel underplating over all

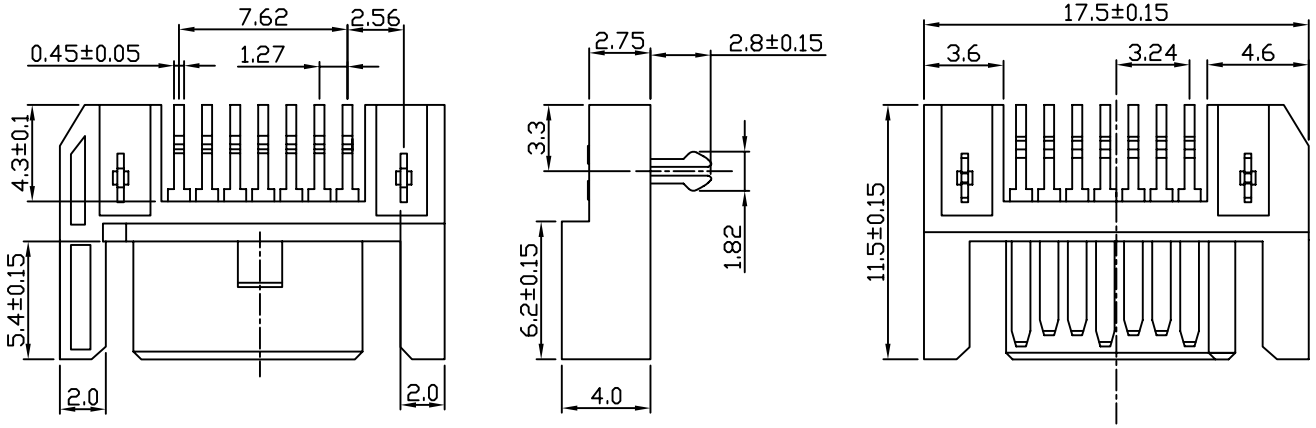

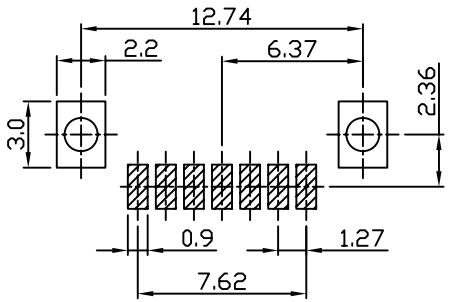

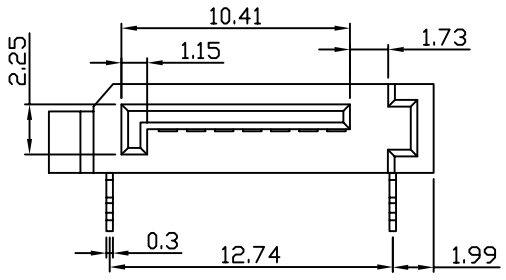

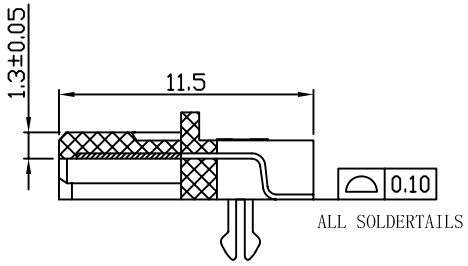

PCB LAYOUT

UNLESS OTHEWIXE SPECIFIED TOLERANCE ANG ±5° 0 ±0.3 .0 ±0.2 .00 ±0.05			KLS Electronic co.,LTD
SCALE		UNIT: mm	
DRAWN	LI BEI LIN	16/08/08	DRAWM NAME
CHECKED			
APPROVED		/ /	PROUCT NO.
		SIZE A4 REV A	PILE NAME:

SATA 7P 板端正向90度 SMT型

SPECIFICATIONS

1.MATERIAL:
- Housig: LCP UL 94V-0
- Color: Black
- Contact: Phosphor bronze
- Peg: Brass

2.FINISH:
- Contact: 3u" Gold/Tin platig on contact area
- 100u" min.Tin-Lead Plating on soldertails
- 50u" min.Nickel underplating over all
- PEG: 100u"min.Tin-Lead plating on soldertails
- 50u"min.Nickel underplating over all

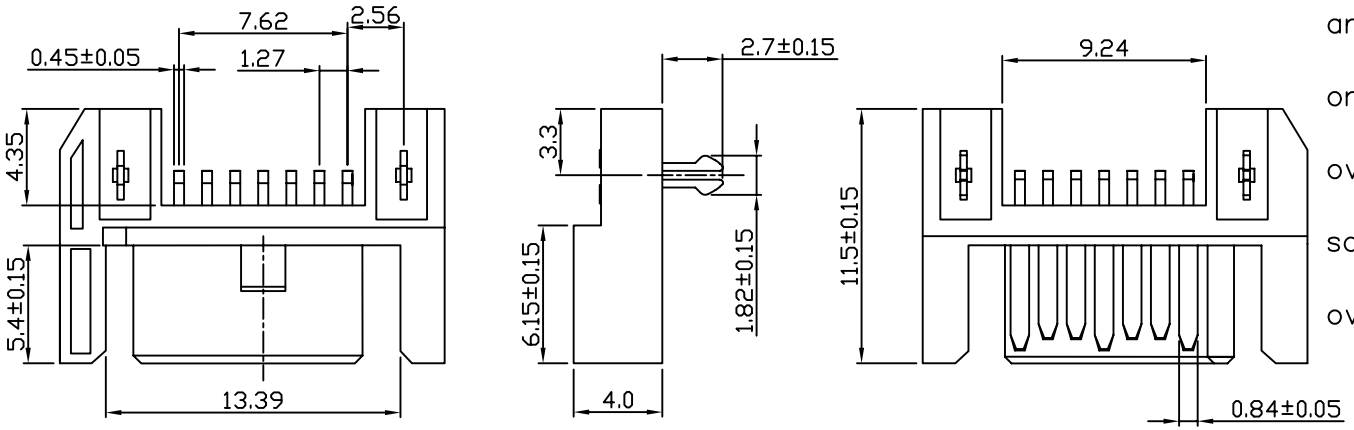

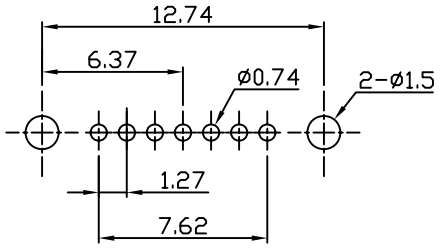

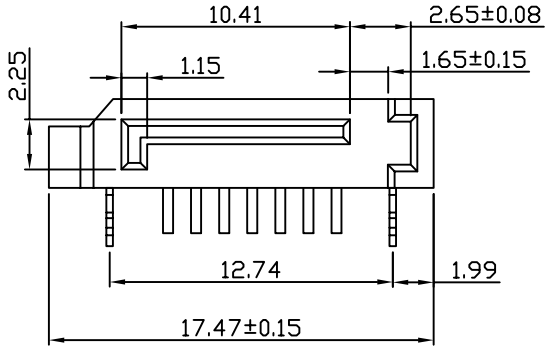

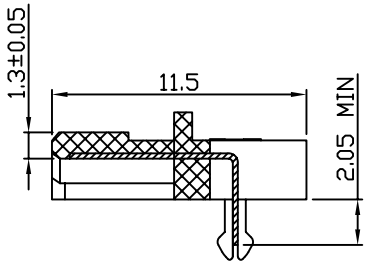

PCB LAYOUT

UNLESS OTHEWIXE SPECIFIED TOLERANCE ANG ±5° 0 ±0.3 0.0 ±0.2 0.00 ±0.05		KLS Electronic co.,LTD
SCALE	UNIT: mm	
DRAWN LI BEI LIN	20/06/08	DRAWM NAME
CHECKED		
APPROVED	/ /	PROUCT NO.
	SIZE A4 REV A	PILE NAME:

SATA 7P 板端正向90度 DIP型

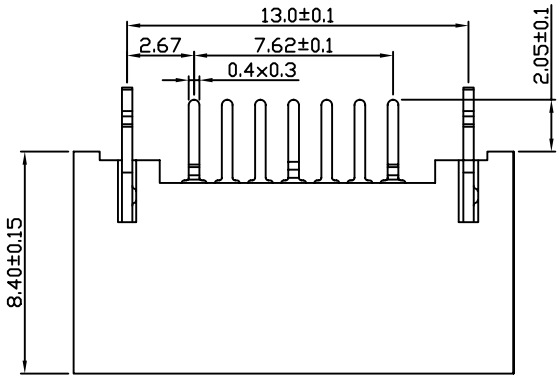

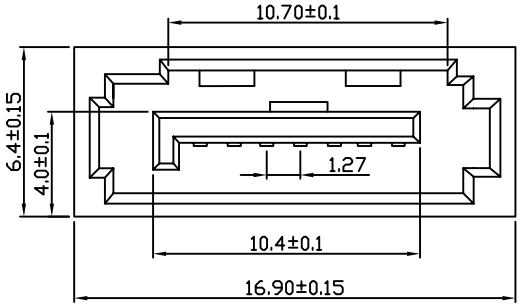

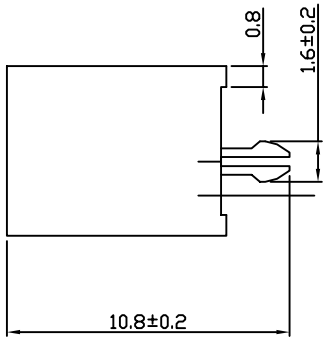

NOTES:

1: MATERIAL:

1.1 Housing: Thermoplastic,UL 94—V0,Color: See table.

1.2 Contavt: Copper alloy,50u"min. Nickel plating Overall;100u" min.Tin on solder tail; Gold plating(see table) on contact area.

1.3 Hook: Copper alloy,50u" min. Nickel and 100u" min Tin plating overall.

2: ELECTRICAL:

2.1 Low level contact resistance: Initially 25 milliohms max.

2.2 Insulation resistance: 1000 megaohms at sea level

2.3Dielectric withstanding voltage: 500VRMS min.

3: According to the enviromental requirement,Warranty The controlled hazardous substance should be meet ROHS'S specification

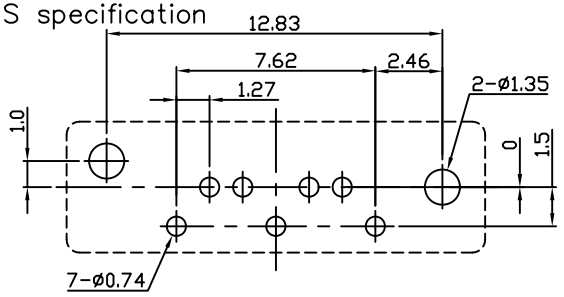

Recommend PC Board Layout
(Top layer ,Thickness:1.60mm)

UNLESS OTHEWIXE SPECIFIED TOLERANCE ANG ±5° 0 ±0.3 0.0 ±0.2 0.00 ±0.05	KLS Electronic co.,LTD
SCALE	UNIT: mm
DRAWN Li Bei Lin	08/10/07
CHECKED	
APPROVED	/ /
SIZE A4 REV A	
DRAWM NAME: SATA 7P	
PROUCT NO.	
PILE NAME:	

SATA 7P 全包不开窗 B型

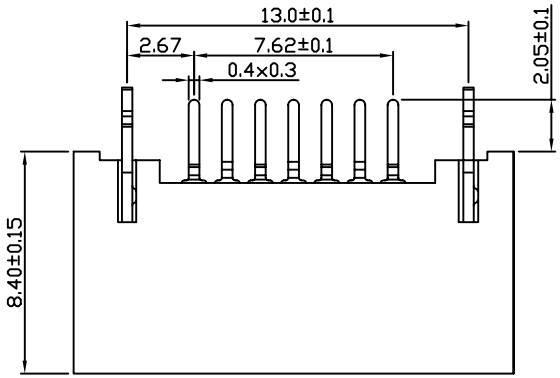

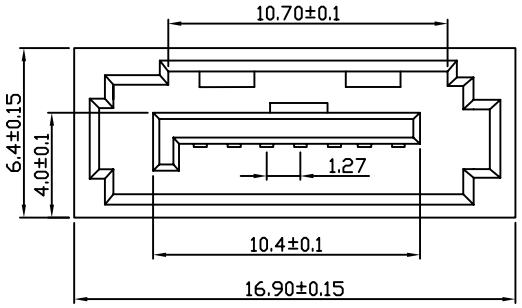

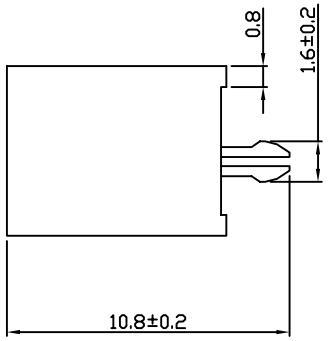

NOTES:

1: MATERIAL:

1.1 Housing: Thermoplastic,UL 94—V0,Color: See table.

1.2 Contavt: Copper alloy,50u"min. Nickel plating Overall;100u" min.Tin on solder tail; Gold plating(see table) on contact area.

1.3 Hook: Copper alloy,50u" min. Nickel and 100u" min Tin plating overall.

2: ELECTRICAL:

2.1 Low level contact resistance: Initially 25 milliohms max.

2.2 Insulation resistance: 1000 megaohms at sea level

2.3Dielectric withstanding voltage: 500VRMS min.

3: According to the enviromental requirement,Warranty The controlled hazardous substance should be meet ROHS'S specification

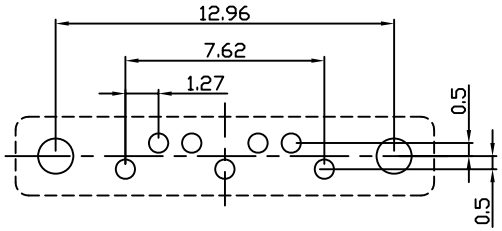

Recommend PC Board Layout
(Top layer ,Thickness:1.60mm)

UNLESS OTHEWIXE SPECIFIED TOLERANCE ANG ±5° 0 ±0.3 0.0 ±0.2 0.00 ±0.05		KLS Electronic co.,LTD
SCALE	UNIT: mm	
DRAWN Li Bei Lin	08/10/07	DRAWM NAME SATA 7P
CHECKED		
APPROVED	/ /	PROUCT NO.
	SIZE A4 REV A	PILE NAME:

SATA 7P 全包不开窗 A型

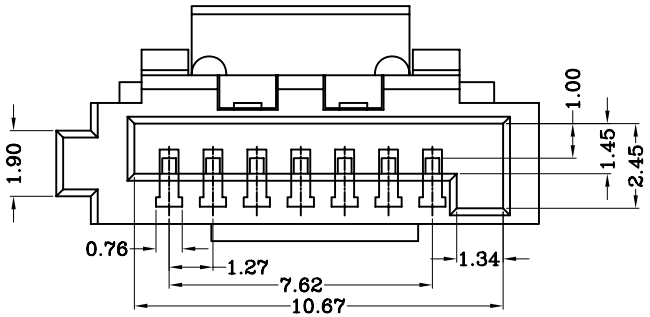

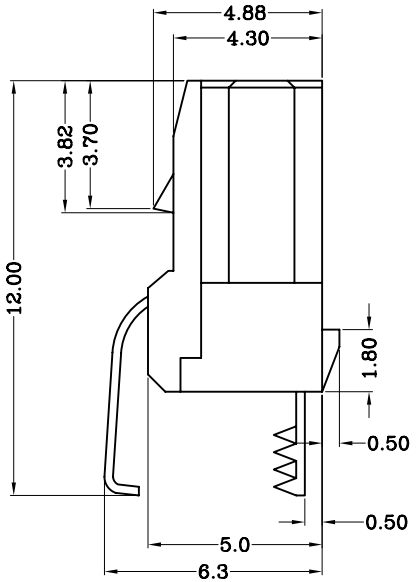

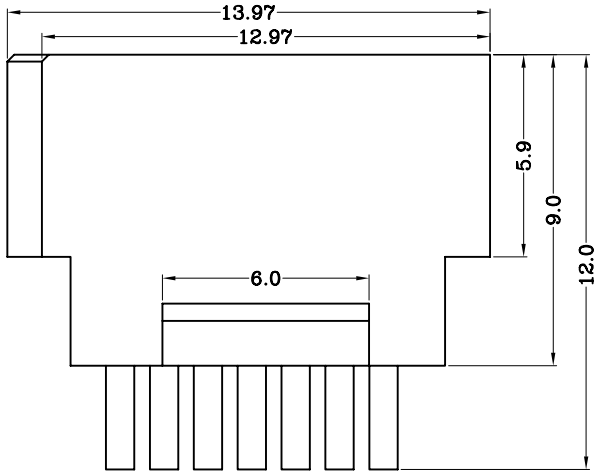

SPECIFICATIONS

1.MATERIAL:

Housig: PBT UL 94V-0

Color: Black

Contact: Phosphor bronze

Peg: Brass

2.FINISH:

Contact: 3u" Gold/Tin platig on contact area

100u" min.Tin-Lead Plating on soldertails

50u" min.Nickel underplating over all

PEG: 100u"min.Tin-Lead plating on soldertails

50u"min.Nickel underplating over all

UNLESS OTHEWIXE SPECIFIED TOLERANCE ANG ±5° 0 ±0.3 0.0 ±0.2 0.00 ±0.05			KLS Electronic co.,LTD
SCALE	UNIT: mm		
DRAWN Li Bei Lin	17/06/08		DRAWM NAME SATA 7P A TYPE
CHECKED			
APPROVED	/ /		PROUCT NO.
	SIZE A4	REV A	PILE NAME:

SATA 7P 焊线式

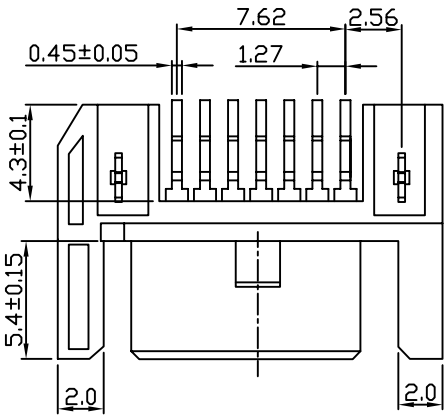

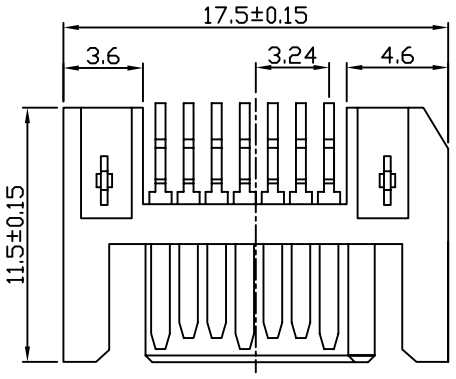

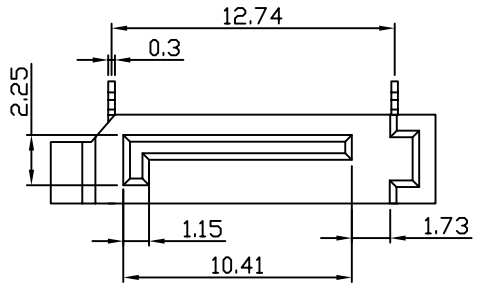

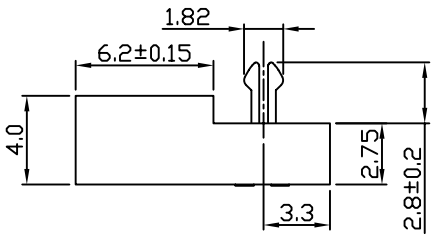

SPECIFICATIONS

Current Rating: 3Amps
Insulator Resistance: 5000mΩ Min
Dielectric Withstanding: AC 500V
Operating Temperature: −40°to+105°
Contact Material: Copper alloy
Insrlator Material: Polyester,UL 94V−0
LCP
Finish : Tin,Gold or Duplex plated
Standard : Gold flash all over
Max.Processing Temp: 230C°for
30−60seconds(260C°for 10 secinds)

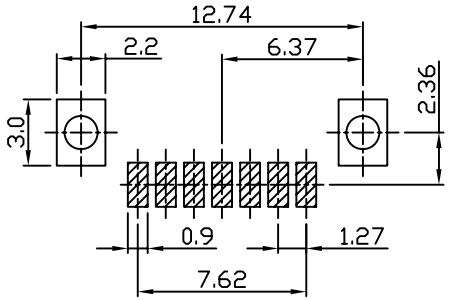

PCB LAYOUT

UNLESS OTHEWIXE SPECIFIED TOLERANCE ANG ±5° 0 ±0.3 .0 ±0.2 .00 ±0.05		KLS Electronic co.,LTD
SCALE	UNIT: mm	
DRAWN 李北林	25/04/08	DRAWM NAME
CHECKED		
APPROVED	/ /	PROUCT NO.
	SIZE A4 REV A	PILE NAME:

SATA 7P 板端反向90度 SMT型

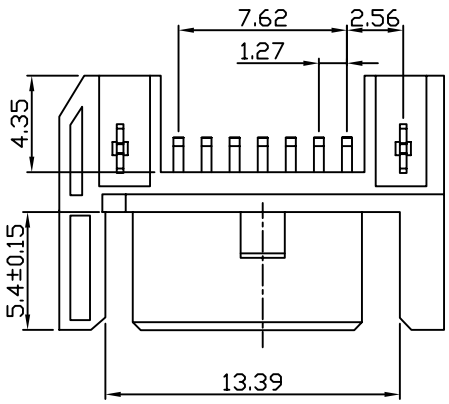

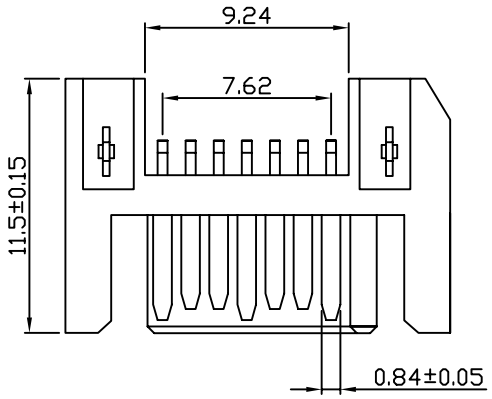

SPECIFICATIONS

1.MATERIAL:

Housig: LCP UL 94V-0

Color: Black

Contact: Phosphor bronze

Peg: Brass

2.FINISH:

Contact: 3u" Gold/Tin platig on contact area

100u" min.Tin-Lead Plating on soldertails

50u" min.Nickel underplating over all

PEG: 100u"min.Tin-Lead plating on soldertails

50u"min.Nickel underplating over all

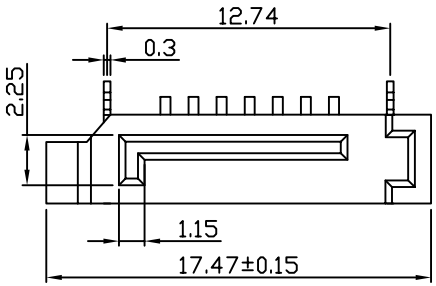

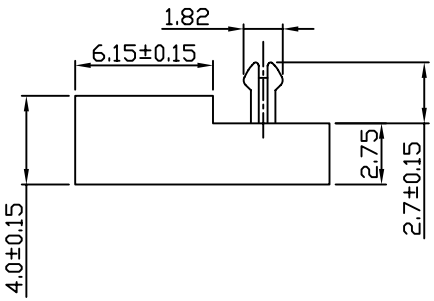

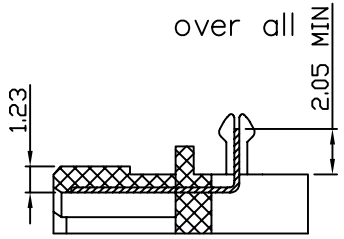

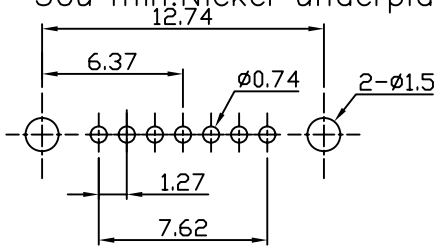

PCB LAYOUT

UNLESS OTHEWIXE SPECIFIED TOLERANCE ANG ±5° 0 ±0.3 .0 ±0.2 .00 ±0.05		KLS Electronic co.,LTD
SCALE	UNIT: mm	
DRAWN 李北林	20/06/08	DRAWM NAME
CHECKED		
APPROVED	/ /	PROUCT NO.
	SIZE A4 REV A	PILE NAME:

SATA 7P 板端反向90度 DIP型



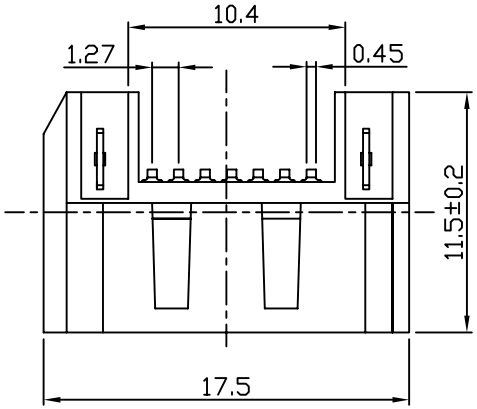

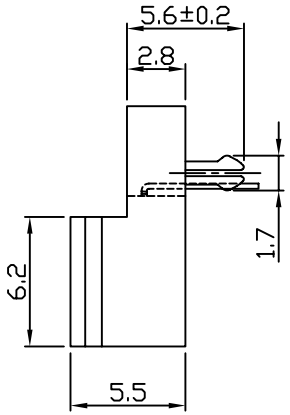

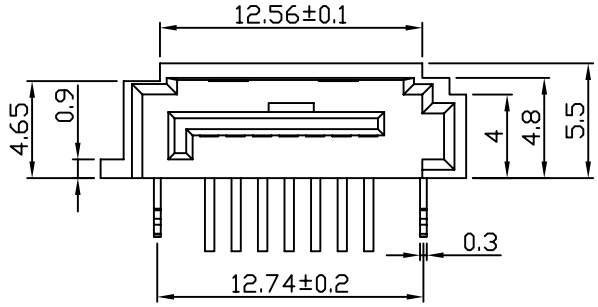

NOTES:

1: MATERIAL:

1.1 Housing: Thermoplastic,UL 94—V0,Color: See table.

1.2 Contavt: Copper alloy,50u"min. Nickel plating Overall;100u" min.Tin on solder tail; Gold plating(see table) on contact area.

1.3 Hook: Copper alloy,50u" min. Nickel and 100u" min Tin plating overall.

2: ELECTRICAL:

2.1 Low level contact resistance: Initially 25 milliohms max.

2.2 Insulation resistance: 1000 megaohms at sea level

2.3Dielectric withstanding voltage: 500VRMS min.

3: According to the enviromental requirement,Warranty The controlled hazardous substance should be meet ROHS'S specification

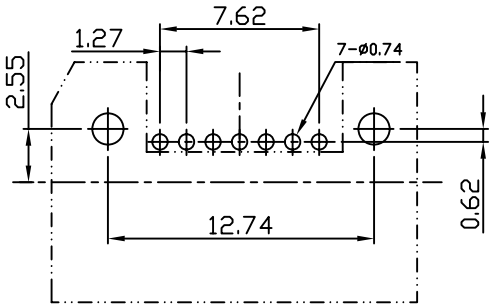

Recommend PC Board Layout
(Top layer ,Thickness:1.60mm)

UNLESS OTHEWIXE SPECIFIED TOLERANCE ANG ±5° 0 ±0.3 0.0 ±0.2 0.00 ±0.05		KLS Electronic co.,LTD
SCALE	UNIT: mm	
DRAWN LI BEI LIN	23/02/09	DRAWM NAME Pin header 2.0mm
CHECKED		
APPROVED	/ /	PROUCT NO.
	SIZE A4 REV A	PILE NAME:

SATA 7P 半包开窗 90°

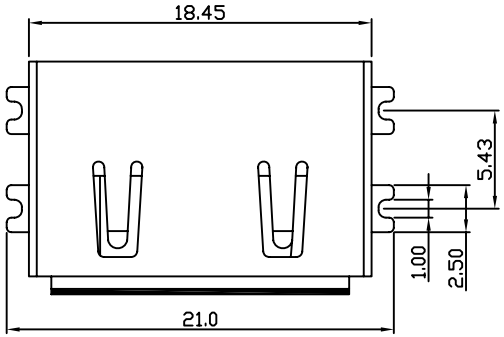

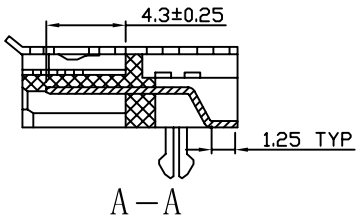

A－A

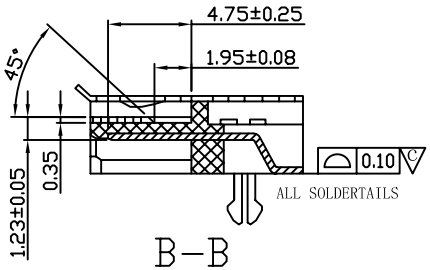

B－B

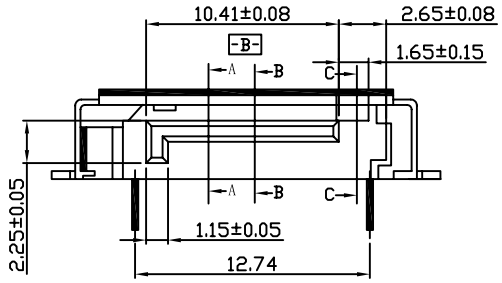

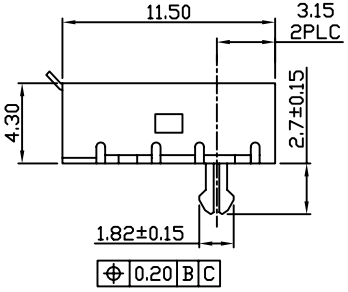

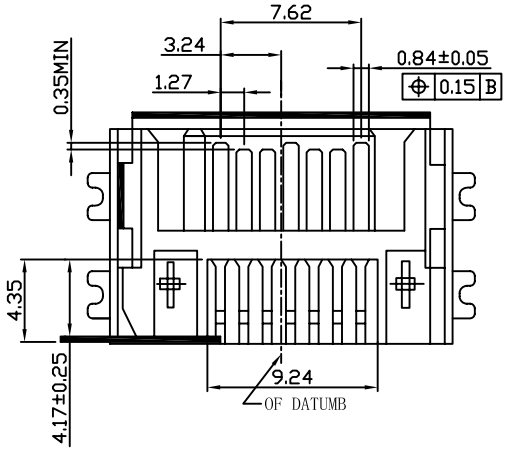

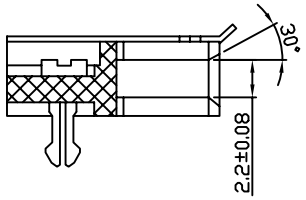

C－C

SPECIFICATIONS

1.MATERIAL:
- Housig: LCP UL 94V-0
- Color: Black
- Contact: Phosphor bronze
- Peg: Brass

2.FINISH:
- Contact: 3u" Gold/Tin platig on contact area
  100u" min.Tin-Lead Plating on soldertails
  50u" min.Nickel underplating over all
- PEG: 100u"min.Tin-Lead plating on soldertails
  50u"min.Nickel underplating over all

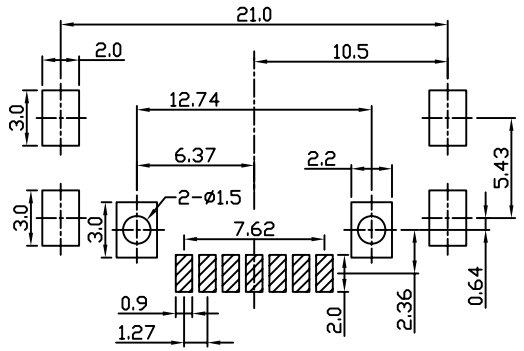

PCB LAYOUT

UNLESS OTHEWIXE SPECIFIED TOLERANCE ANG ±5° 0 ±0.3 .0 ±0.2 .00 ±0.05		KLS Electronic co.,LTD
SCALE	UNIT: mm	
DRAWN LI BEI LIN	16/08/08	DRAWM NAME
CHECKED		
APPROVED	/ /	PROUCT NO.
	SIZE A4 REV A	PILE NAME:

SATA 7P 板端加铁90度SMT型

SPECIFICATIONS

Current Rating: 3Amps
Insulator Resistance: 5000mΩ Min
Dielectric Withstanding: AC 500V
Operating Temperature: −40°to+105°
Contact Material: Copper alloy
Insrlator Material: Polyester,UL 94V−0 LCP
Finish : Tin,Gold or Duplex plated
Standard : Gold flash all over
Max.Processing Temp: 230C°for 30−60seconds(260C°for 10 secinds)

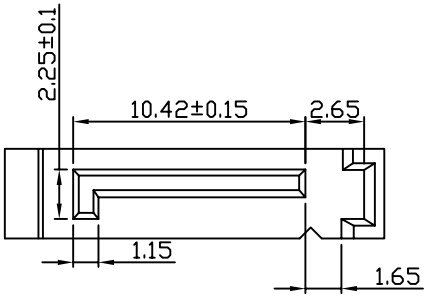

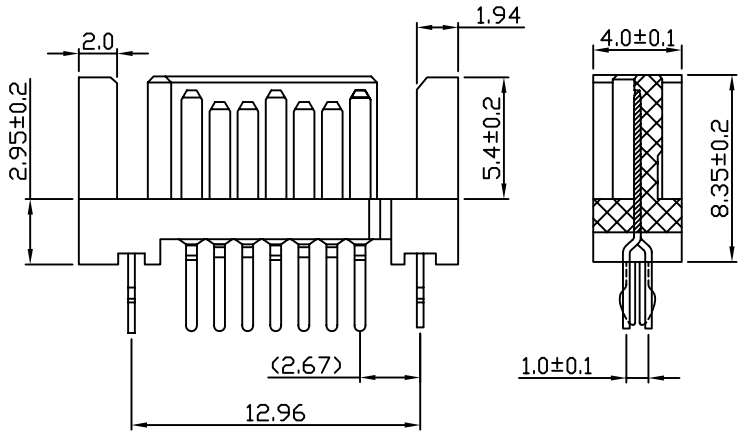

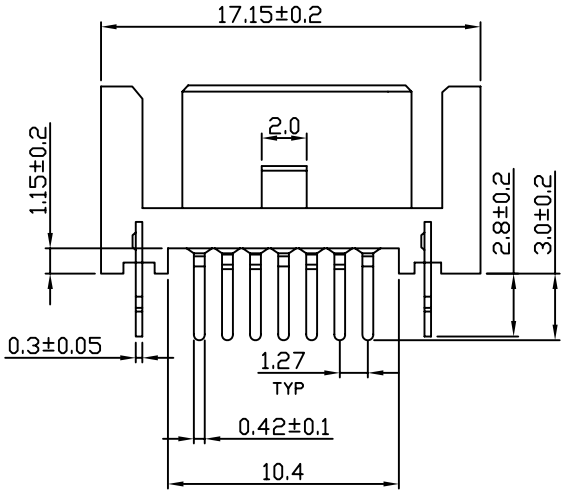

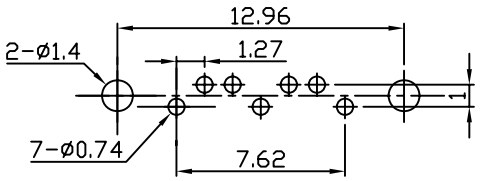

UNLESS OTHEWIXE SPECIFIED TOLERANCE ANG ±5° 0 ±0.3 .0 ±0.2 .00 ±0.05		KLS Electronic co.,LTD
SCALE	UNIT: mm	
DRAWN 李北林	08/10/07	DRAWM NAME Pin header 2.0mm
CHECKED		
APPROVED	/ /	PROUCT NO.
	SIZE A4 REV A	PILE NAME:

SATA 7P A TYPE 双柱插板式

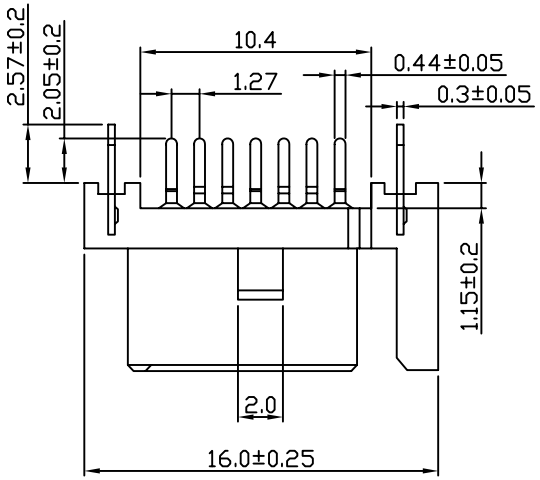

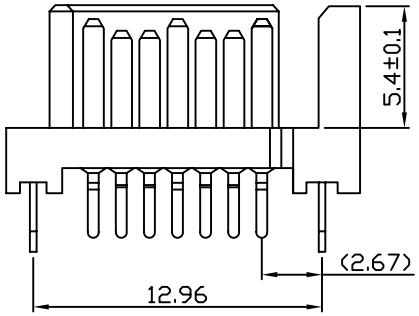

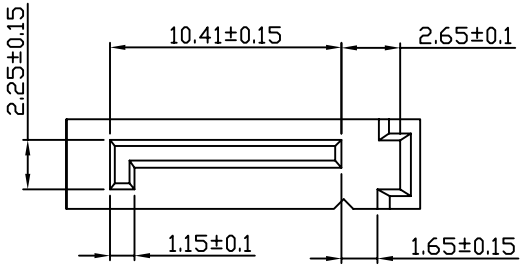

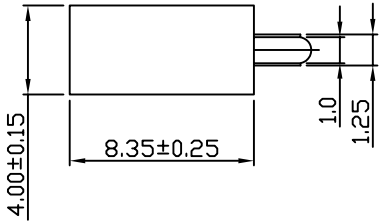

SPECIFICATIONS

1.MATERIAL:
- Housig: LCP UL 94V-0
- Color: Black
- Contact: Phosphor bronze
- Peg: Brass

2.FINISH:
- Contact: 3u" Gold/Tin platig on contact area
  100u" min.Tin-Lead Plating on soldertails
  50u" min.Nickel underplating over all
- PEG: 100u"min.Tin-Lead plating on soldertails
  50u"min.Nickel underplating over all

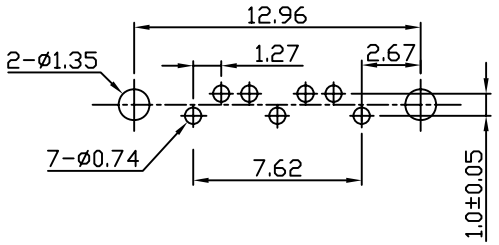

Recommend PC Board Layout

UNLESS OTHEWIXE SPECIFIED TOLERANCE ANG ±5° 0 ±0.3 .0 ±0.2 .00 ±0.05	KLS Electronic co.,LTD
SCALE	UNIT: mm
DRAWN Li Bei Lin	17/06/08
CHECKED	
APPROVED	/ /
SIZE A4 REV A	

DRAWM NAME: SATA 7P A TYPE
PROUCT NO.
PILE NAME:

SATA 7P A TYPE 单柱插板式

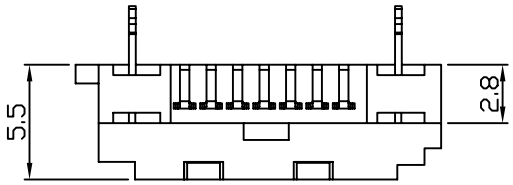

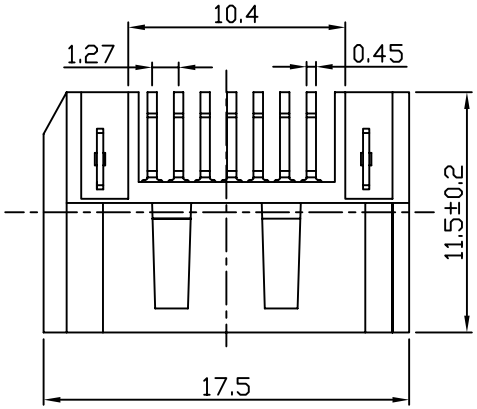

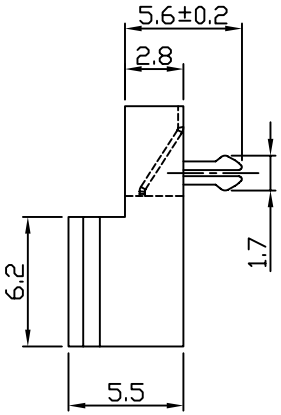

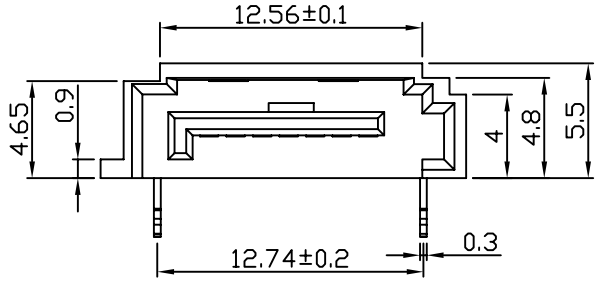

NOTES:

1: MATERIAL:

1.1 Housing: Thermoplastic,UL 94—V0,Color: See table.

1.2 Contavt: Copper alloy,50u"min. Nickel plating Overall; 100u" min.Tin on solder tail; Gold plating(see table) on contact area.

1.3 Hook: Copper alloy,50u" min. Nickel and 100u" min Tin plating overall.

2: ELECTRICAL:

2.1 Low level contact resistance: Initially 25 milliohms max.

2.2 Insulation resistance: 1000 megaohms at sea level

2.3Dielectric withstanding voltage: 500VRMS min.

3: According to the enviromental requirement,Warranty The controlled hazardous substance should be meet ROHS'S specification

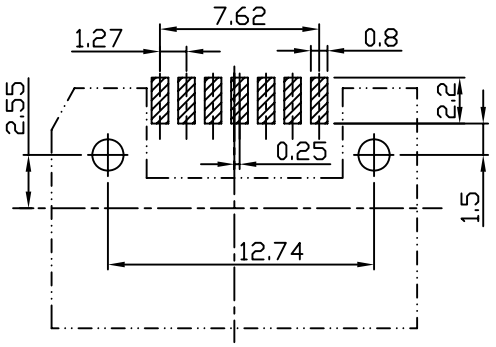

Recommend PC Board Layout
(Top layer ,Thickness:1.60mm)

UNLESS OTHEWIXE SPECIFIED TOLERANCE ANG ±5° 0 ±0.3 0.0 ±0.2 0.00 ±0.05		KLS Electronic co.,LTD
SCALE	UNIT: mm	
DRAWN LI BEI LIN	08/10/07	DRAWM NAME Pin header 2.0mm
CHECKED		
APPROVED	/ /	PROUCT NO.
	SIZE A4 REV A	PILE NAME:

SATA 7P 半包开窗 SMT

SPECIFICATIONS

Current Rating: 3Amps
Insulator Resistance: 5000mΩ Min
Dielectric Withstanding: AC 500V
Operating Temperature: −40°to+105°
Contact Material: Copper alloy
Insrlator Material: Polyester,UL 94V−0 LCP
Finish : Tin,Gold or Duplex plated
Standard : Gold flash all over
Max.Processing Temp: 230C°for 30−60seconds(260C°for 10 secinds)

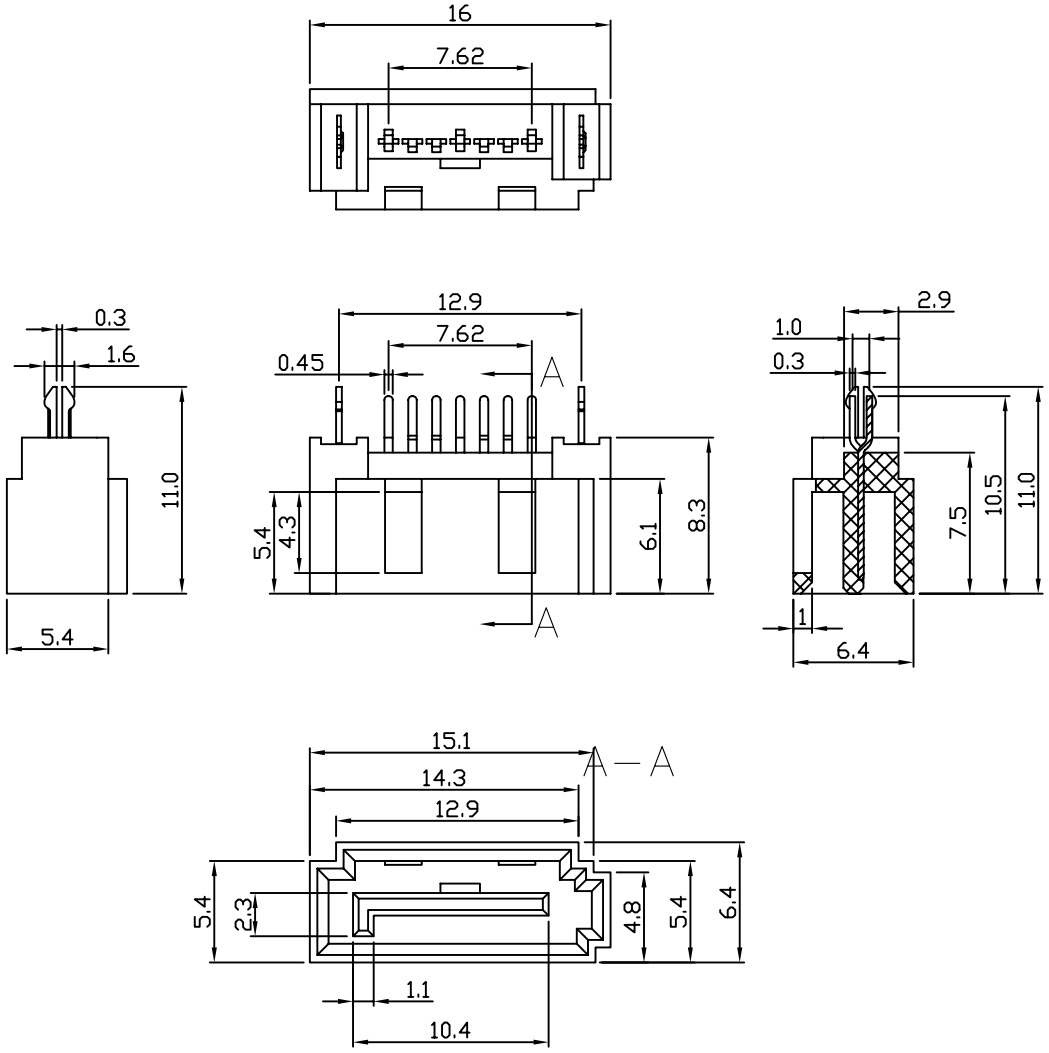

UNLESS OTHEWIXE SPECIFIED TOLERANCE ANG ±5° 0 ±0.3 .0 ±0.2 .00 ±0.05			KLS Electronic co.,LTD
SCALE	UNIT: mm		
DRAWN 李北林	08/10/07		DRAWM NAME
CHECKED			
APPROVED	/ /		PROUCT NO.
	SIZE A4	REV A	PILE NAME:

SATA 7P 180° 四面包

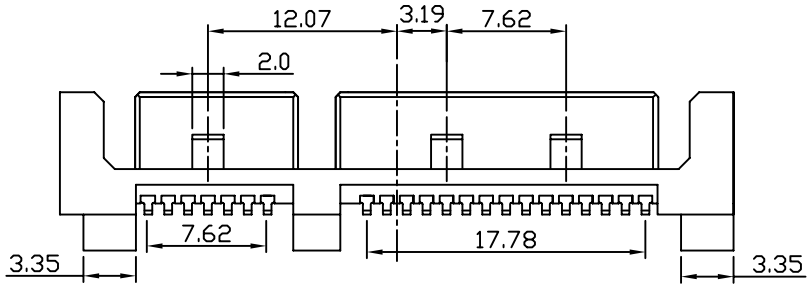

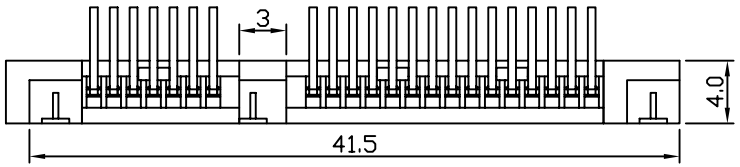

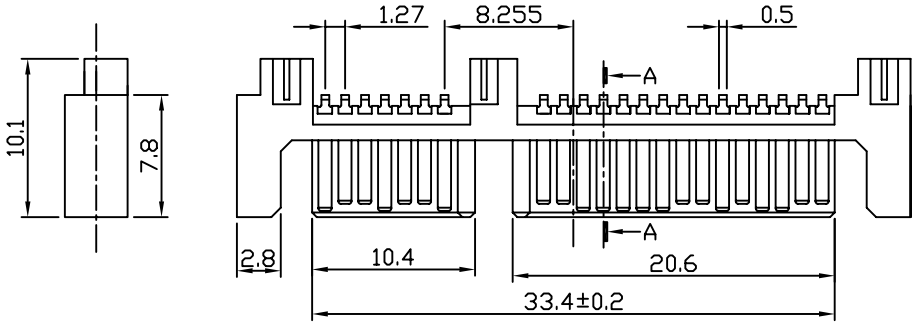

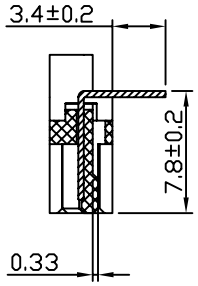

A-A SECTION

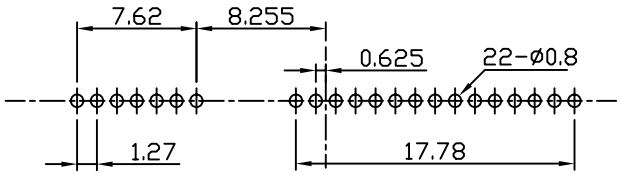

SPECIFICATIONS

1.MATERIAL:
- Housig: LCP UL 94V-0
- Color: Black
- Contact: Phosphor bronze
- Peg: Brass

2.FINISH:
- Contact: 3u" Gold/Tin platig on contact area
  100u" min.Tin-Lead Plating on soldertails
  50u" min.Nickel underplating over all
- PEG: 100u"min.Tin-Lead plating on soldertails
  50u"min.Nickel underplating over all

PCB LAYOUT

UNLESS OTHEWIXE SPECIFIED TOLERANCE ANG ±5° 0 ±0.3 .0 ±0.2 .00 ±0.05		KLS Electronic co.,LTD
SCALE	UNIT: mm	
DRAWN LI BEI LIN	06/04/09	DRAWM NAME SATA 7+15
CHECKED		
APPROVED	/ /	PROUCT NO.
	SIZE A4 REV A	PILE NAME:

SATA 7+15P 公座反向90度DIP型

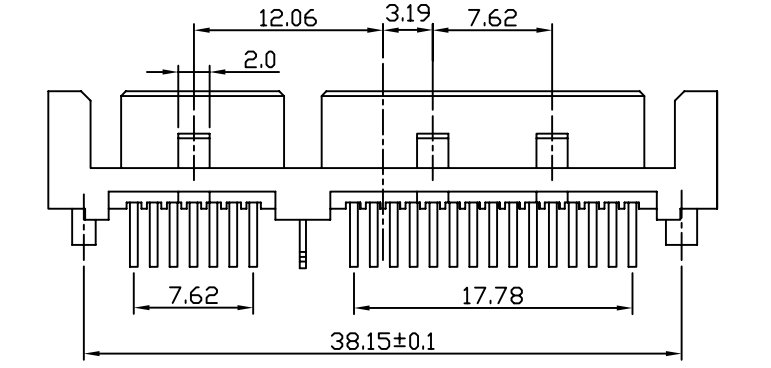

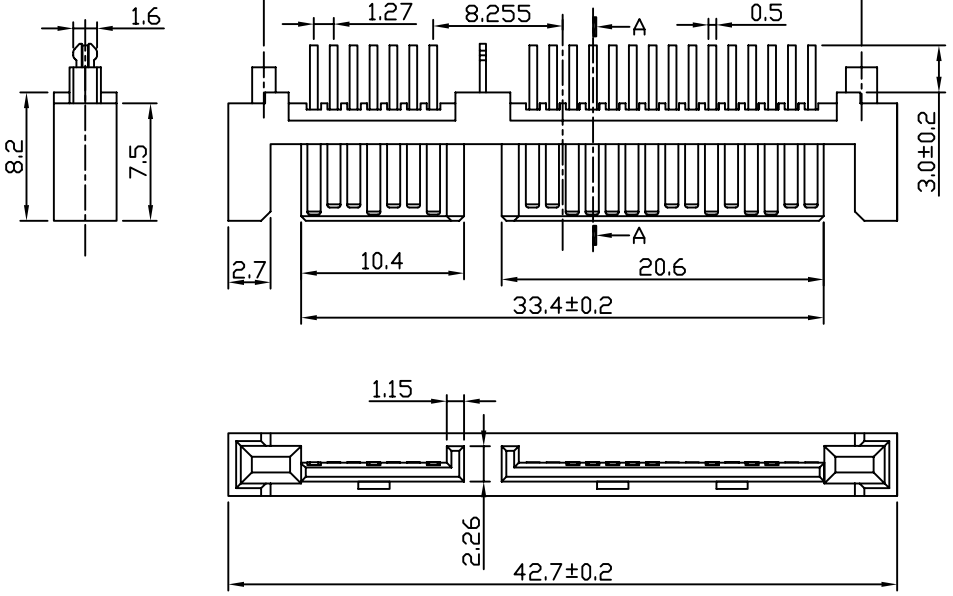

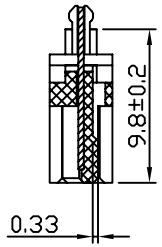

A-A SECTION

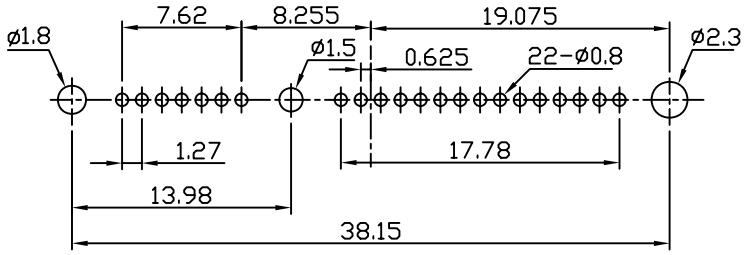

SPECIFICATIONS

1.MATERIAL:
- Housig: LCP UL 94V-0
- Color: Black
- Contact: Phosphor bronze
- Peg: Brass

2.FINISH:
- Contact: 3u" Gold/Tin platig on contact area
  100u" min.Tin-Lead Plating on soldertails
  50u" min.Nickel underplating over all
- PEG: 100u"min.Tin-Lead plating on soldertails
  50u"min.Nickel underplating over all

PCB LAYOUT

UNLESS OTHEWIXE SPECIFIED TOLERANCE ANG ±5° 0 ±0.3 0.0 ±0.2 0.00 ±0.05		KLS Electronic co.,LTD
SCALE	UNIT: mm	
DRAWN LI BEI LIN	07/21/07	DRAWM NAME: SATA 7+15
CHECKED		
APPROVED	/ /	PROUCT NO.
	SIZE A4 REV A	PILE NAME:

SATA 7+15P 公座180度带柱带鱼叉DIP型

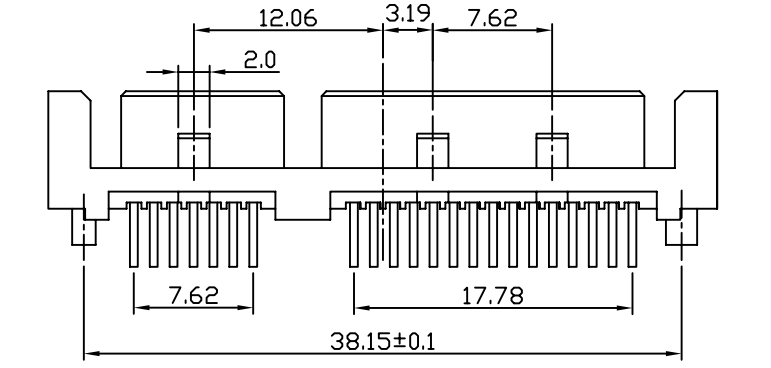

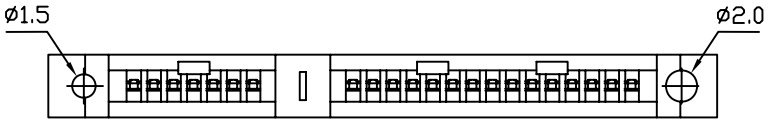

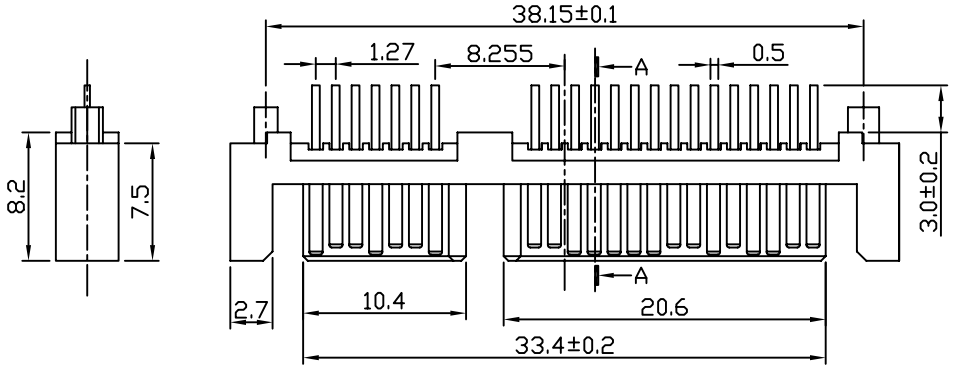

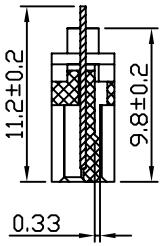

A-A SECTION

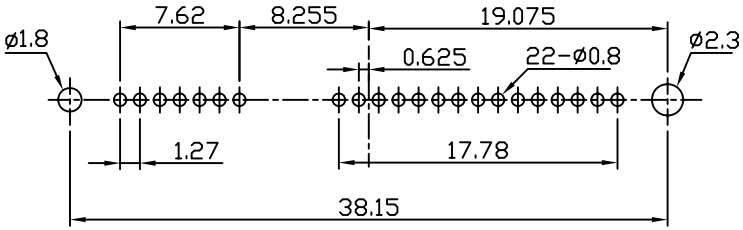

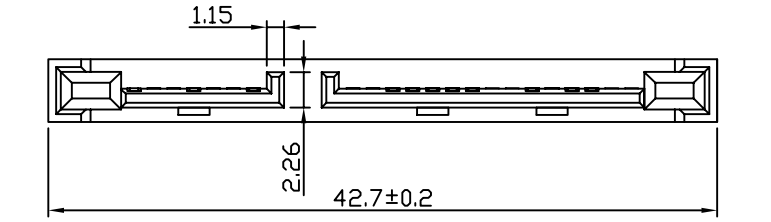

SPECIFICATIONS

1.MATERIAL:
- Housig: LCP UL 94V-0
- Color: Black
- Contact: Phosphor bronze
- Peg: Brass

2.FINISH:
- Contact: 3u" Gold/Tin platig on contact area
  100u" min.Tin-Lead Plating on soldertails
  50u" min.Nickel underplating over all
- PEG: 100u"min.Tin-Lead plating on soldertails
  50u"min.Nickel underplating over all

PCB LAYOUT

UNLESS OTHEWIXE SPECIFIED TOLERANCE ANG ±5° 0 ±0.3 .0 ±0.2 .00 ±0.05		KLS Electronic co.,LTD
SCALE	UNIT: mm	
DRAWN LI BEI LIN	07/21/07	DRAWM NAME: SATA 7+15
CHECKED		
APPROVED	/ /	PROUCT NO.
	SIZE A4 REV A	PILE NAME:

SATA 7+15P 公座180度DIP型 带柱

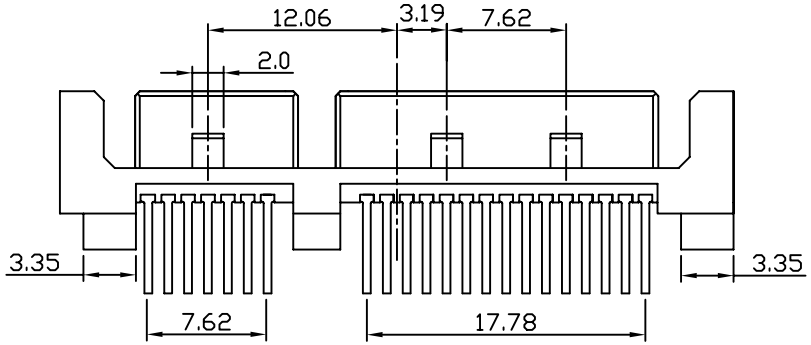

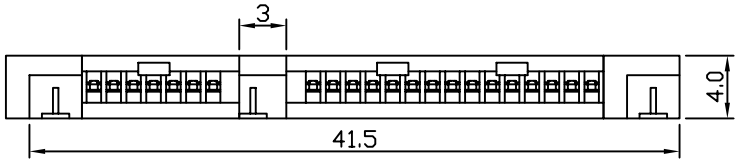

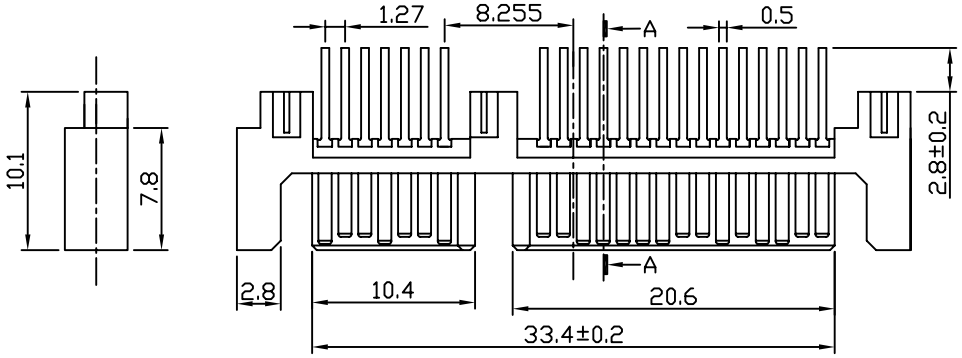

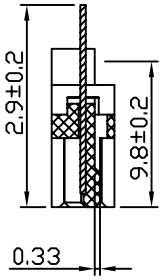

A-A SECTION

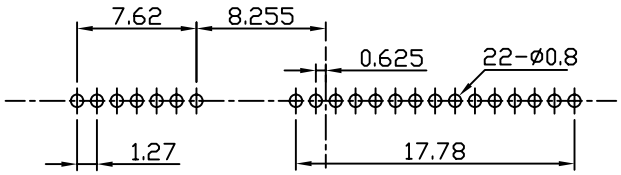

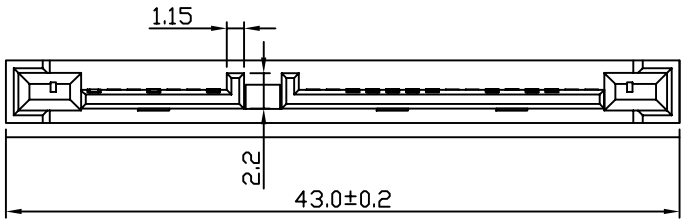

SPECIFICATIONS

1.MATERIAL:
- Housig: LCP UL 94V-0
- Color: Black
- Contact: Phosphor bronze
- Peg: Brass

2.FINISH:
- Contact: 3u" Gold/Tin platig on contact area
  100u" min.Tin-Lead Plating on soldertails
  50u" min.Nickel underplating over all
- PEG: 100u"min.Tin-Lead plating on soldertails
  50u"min.Nickel underplating over all

PCB LAYOUT

UNLESS OTHEWIXE SPECIFIED TOLERANCE ANG ±5° 0 ±0.3 .0 ±0.2 .00 ±0.05		KLS Electronic co.,LTD
SCALE	UNIT: mm	
DRAWN LI BEI LIN	07/21/07	DRAWM NAME SATA 7+15
CHECKED		
APPROVED	/ /	PROUCT NO.
	SIZE A4 REV A	PILE NAME:

SATA 7+15P 公座180度DIP型

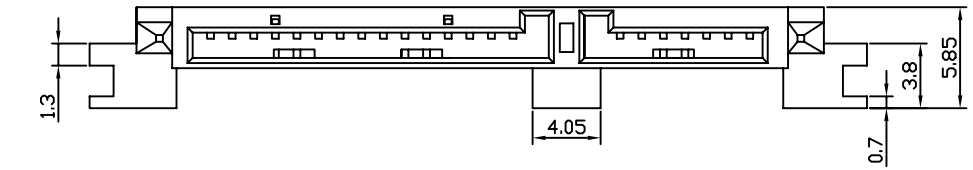

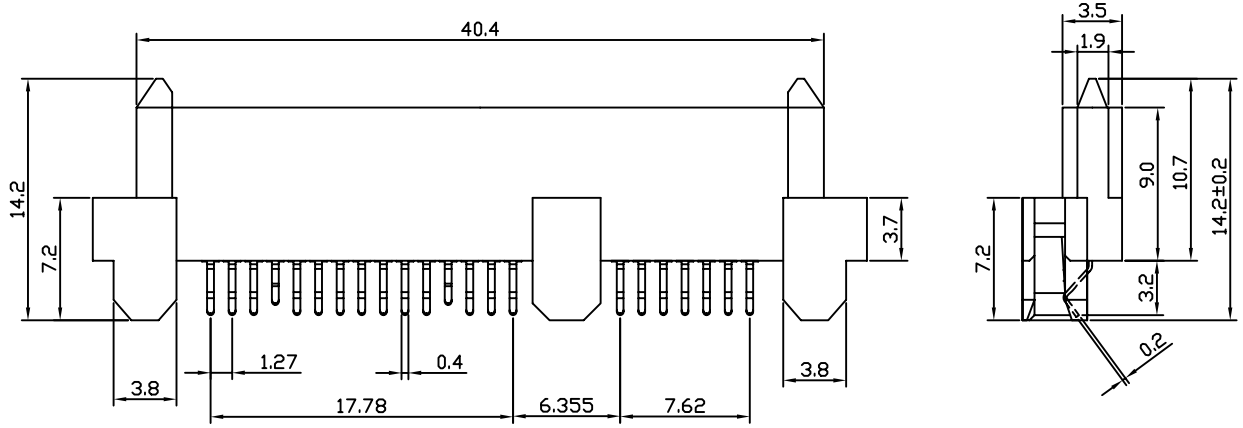

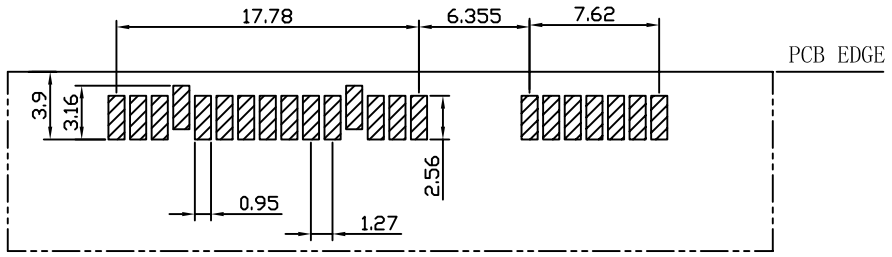

RECOMMEND PCB LAYOUT(T=1.2)

PCB TOLERANCE: ±0.05

SPECIFICATIONS

1.MATERIAL:
- Housig: LCP UL 94V-0
- Color: Black
- Contact: Phosphor bronze
- Peg: Brass

2.FINISH:
- Contact: 3u" Gold/Tin platig on contact area
- 100u" min.Tin-Lead Plating on soldertails
- 50u" min.Nickel underplating over all
- PEG: 100u"min.Tin-Lead plating on soldertails
- 50u"min.Nickel underplating over all

UNLESS OTHEWIXE SPECIFIED TOLERANCE ANG ±5° 0 ±0.3 .0 ±0.2 .00 ±0.05		KLS Electronic co.,LTD	
SCALE	UNIT: mm		
DRAWN Li Bei Lin	09/02/09	DRAWM NAME	SATA 7+15
CHECKED			
APPROVED	/ /	PROUCT NO.	
	SIZE A4 REV A	PILE NAME:	

SATA 7+15P 夹板母头

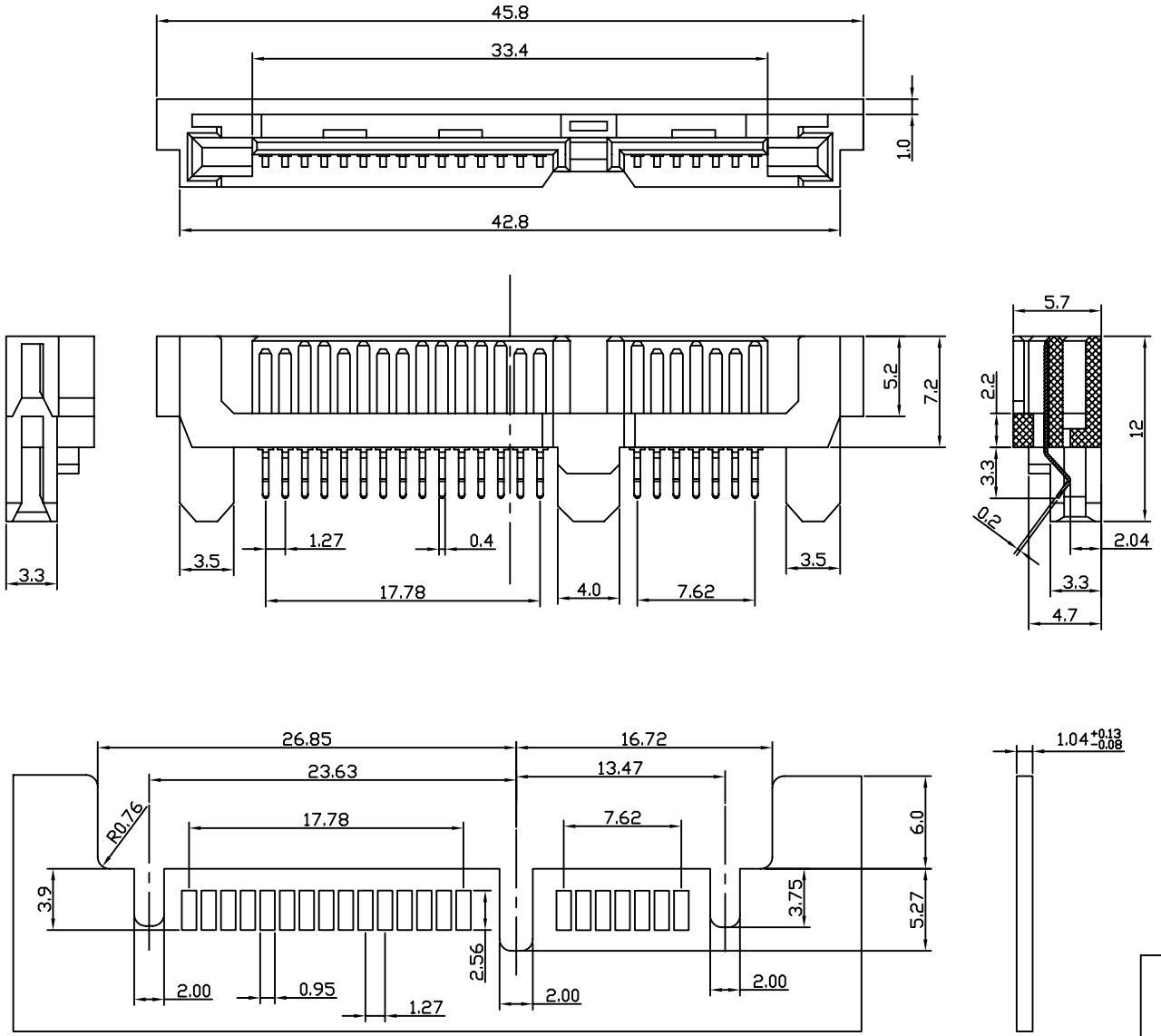

SPECIFICATIONS

1.MATERIAL:
- Housig: LCP UL 94V−0
- Color: Black
- Contact: Phosphor bronze
- Peg: Brass

2.FINISH:

Contact: 3u" Gold/Tin platig on contact area

100u" min.Tin−Lead Plating on soldertails

50u" min.Nickel underplating over all

PEG: 100u"min.Tin−Lead plating on soldertails

50u"min.Nickel underplating over all

UNLESS SPECIFIED	OTHEWIXE TOLERANCE	KLS Electronic co.,LTD
ANG	±5°	
0	±0.3	
0.0	±0.2	
0.00	±0.05	
SCALE	UNIT: mm	
DRAWN Li Bei Lin	09/07/07	DRAWM NAME SATA 7+15
CHECKED		
APPROVED	/ /	PROUCT NO.
	SIZE A4 REV A	PILE NAME:

SATA 7+15P 夹角公座

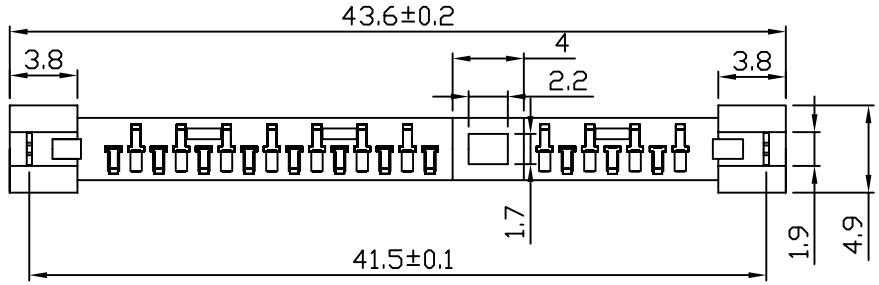

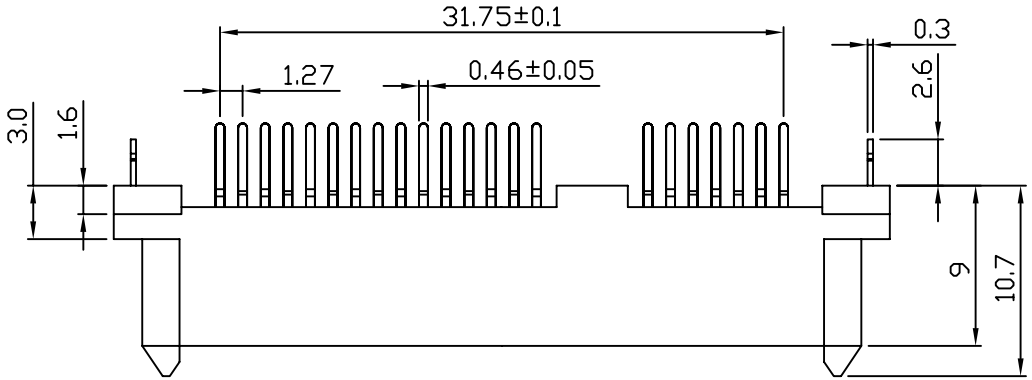

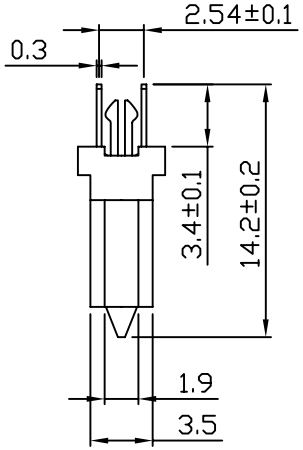

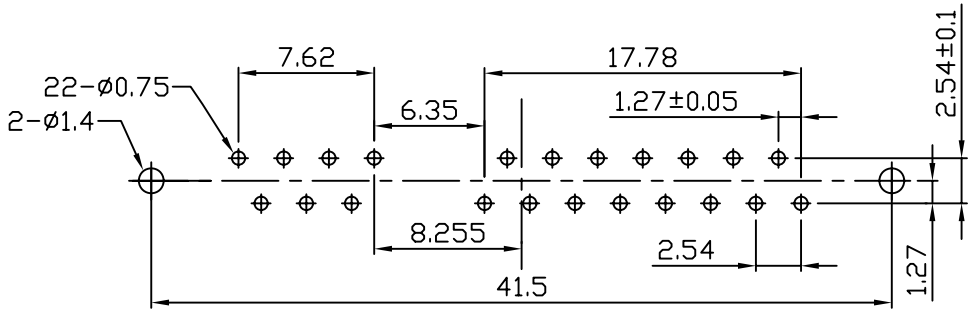

PCB LAYOUT

SPECIFICATIONS

1.MATERIAL:
- Housig: LCP UL 94V-0
- Color: Black
- Contact: Phosphor bronze
- Peg: Brass

2.FINISH:
- Contact: 3u" Gold/Tin platig on contact area
  100u" min.Tin-Lead Plating on soldertails
  50u" min.Nickel underplating over all
- PEG: 100u"min.Tin-Lead plating on soldertails
  50u"min.Nickel underplating over all

UNLESS OTHEWIXE SPECIFIED TOLERANCE ANG ±5° 0 ±0.3 0.0 ±0.2 0.00 ±0.05		KLS Electronic co.,LTD
SCALE	UNIT: mm	
DRAWN LI BEI LIN	07/21/07	DRAWM NAME SATA 7+15
CHECKED		
APPROVED	/ /	PROUCT NO.
	SIZE A4 REV A	PILE NAME:

SATA 7+15 夹板胶芯 带鱼叉 双排长端

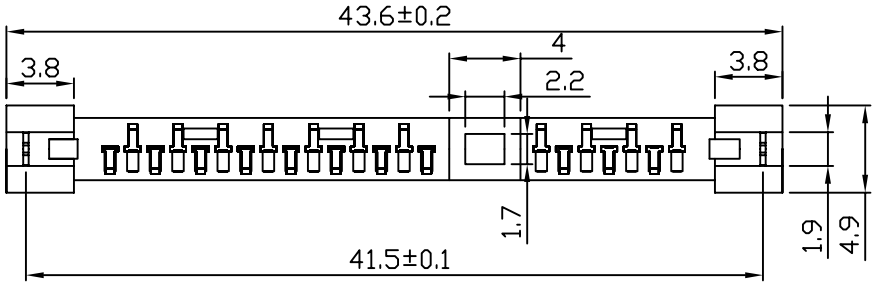

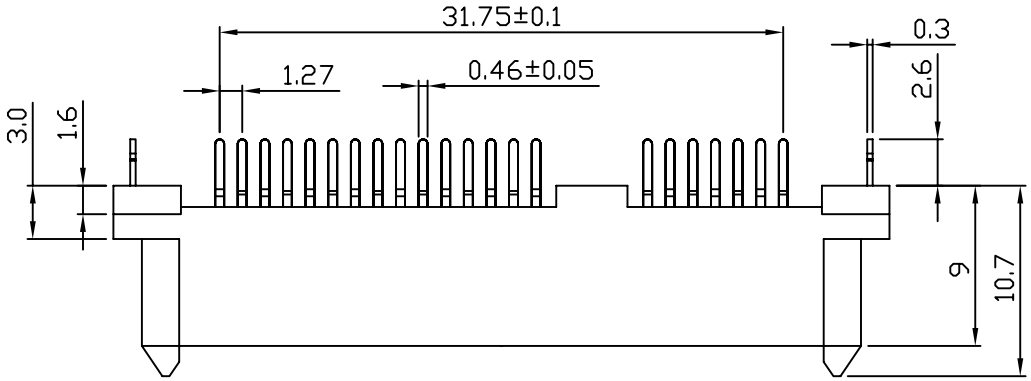

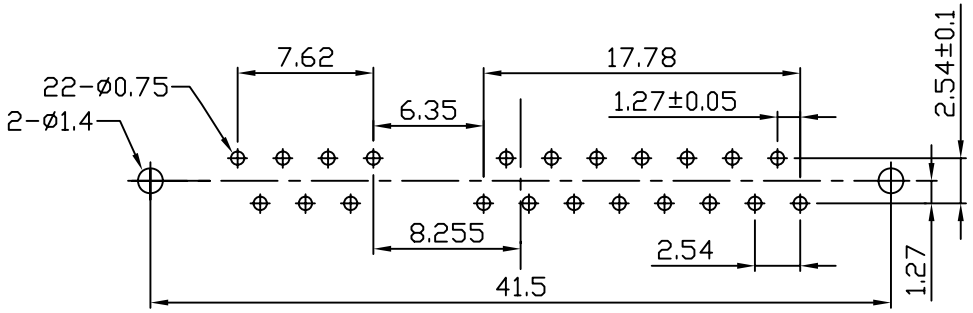

PCB LAYOUT

SPECIFICATIONS

1.MATERIAL:
- Housig: LCP UL 94V-0
- Color: Black
- Contact: Phosphor bronze
- Peg: Brass

2.FINISH:
- Contact: 3u" Gold/Tin platig on contact area
  100u" min.Tin-Lead Plating on soldertails
  50u" min.Nickel underplating over all
- PEG: 100u"min.Tin-Lead plating on soldertails
  50u"min.Nickel underplating over all

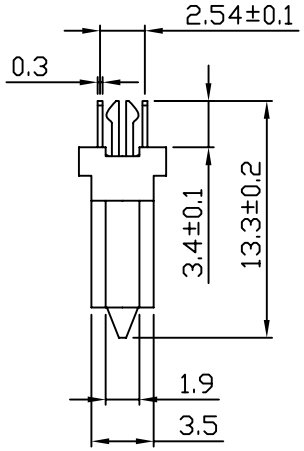

UNLESS OTHEWIXE SPECIFIED TOLERANCE ANG ±5° 0 ±0.3 0.0 ±0.2 0.00 ±0.05		KLS Electronic co.,LTD
SCALE	UNIT: mm	
DRAWN LI BEI LIN	07/21/07	DRAWM NAME SATA 7+15
CHECKED		
APPROVED	/ /	PROUCT NO.
	SIZE A4 REV A	PILE NAME:

SATA 7+15 夹板胶芯 带鱼叉 双排短端

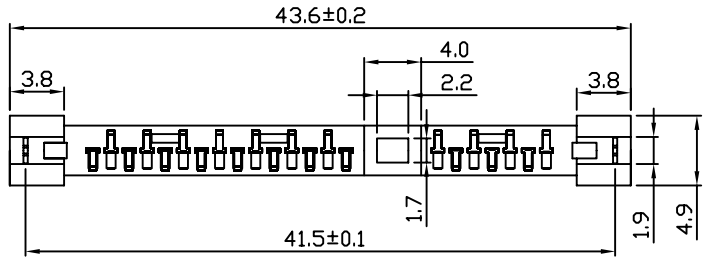

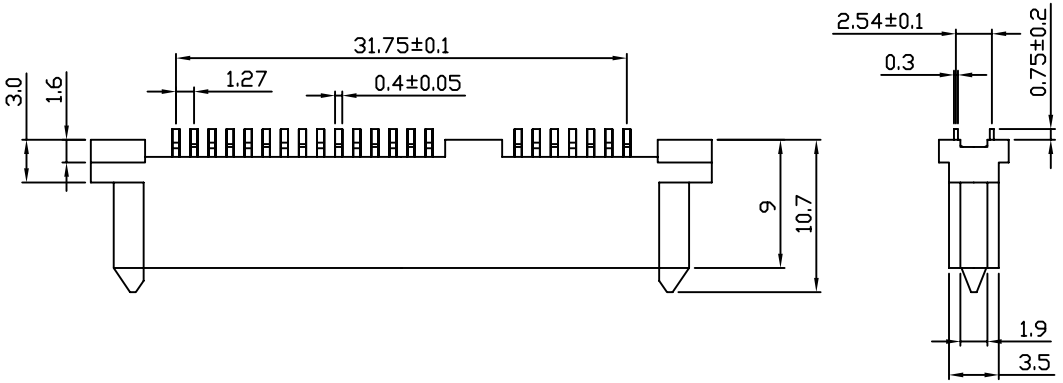

SPECIFICATIONS

1.MATERIAL:
- Housig: LCP UL 94V-0
- Color: Black
- Contact: Phosphor bronze
- Peg: Brass

2.FINISH:
- Contact: 3u" Gold/Tin platig on contact area
- 100u" min.Tin-Lead Plating on soldertails
- 50u" min.Nickel underplating over all
- PEG: 100u"min.Tin-Lead plating on soldertails
- 50u"min.Nickel underplating over all

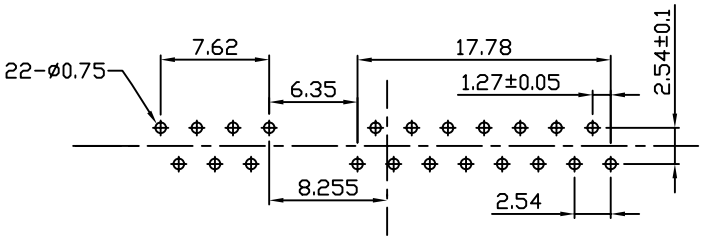

PCB LAYOUT

UNLESS OTHEWIXE SPECIFIED TOLERANCE ANG ±5° 0 ±0.3 0.0 ±0.2 0.00 ±0.05		KLS Electronic co.,LTD
SCALE	UNIT: mm	
DRAWN LI BEI LIN	07/21/07	DRAWM NAME SATA 7+15
CHECKED		
APPROVED	/ /	PROUCT NO.
	SIZE A4 REV A	PILE NAME:

SATA 7+15 夹板胶芯 PC0.75mm

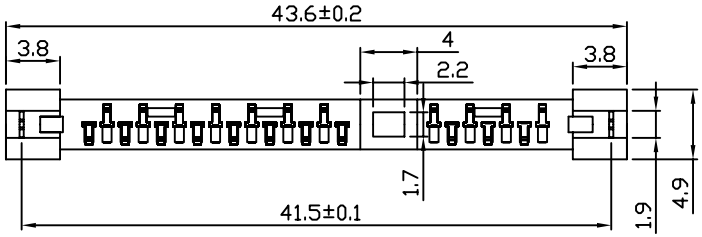

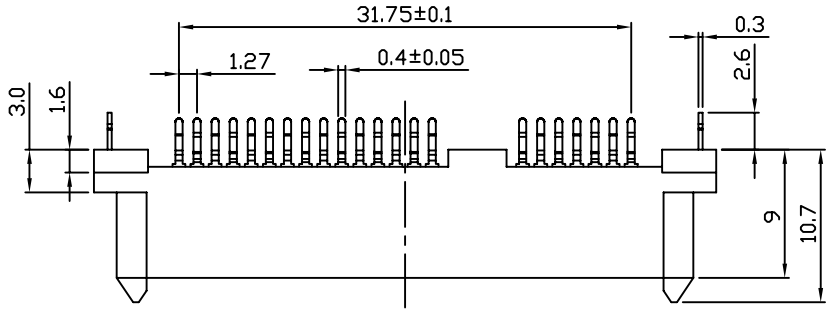

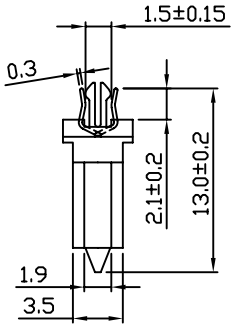

SPECIFICATIONS

1.MATERIAL:
- Housig: LCP UL 94V-0
- Color: Black
- Contact: Phosphor bronze
- Peg: Brass

2.FINISH:
- Contact: 3u" Gold/Tin platig on contact area
- 100u" min.Tin-Lead Plating on soldertails
- 50u" min.Nickel underplating over all
- PEG: 100u"min.Tin-Lead plating on soldertails
- 50u"min.Nickel underplating over all

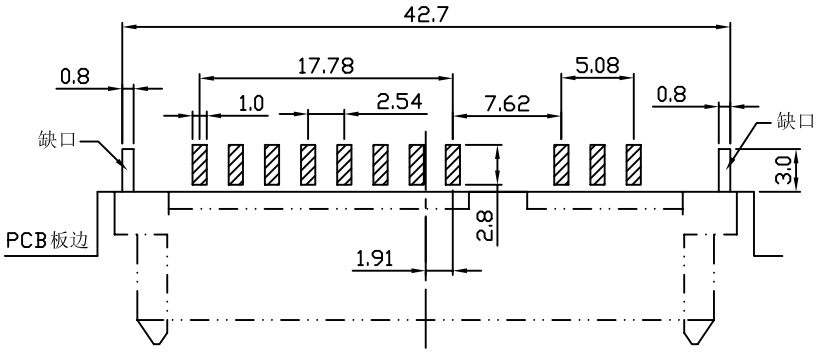

(A面)

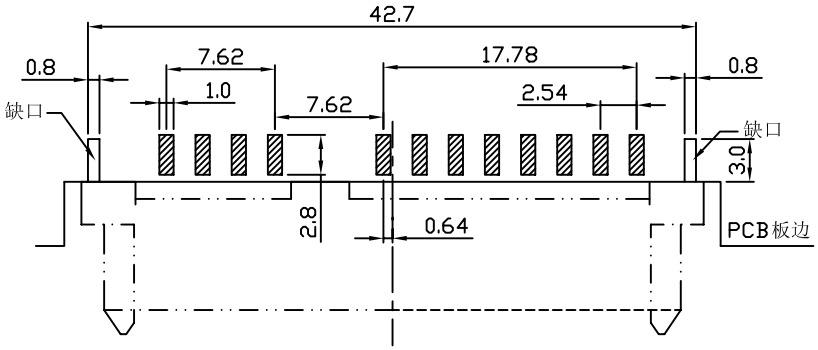

(B面)

PCB LAYOUT

UNLESS OTHEWIXE SPECIFIED TOLERANCE	
ANG	±5°
0	±0.3
0.0	±0.2
0.00	±0.05

KLS Electronic co.,LTD

SCALE	UNIT: mm	
DRAWN LI BEI LIN	07/21/07	DRAWM NAME SATA 7+15
CHECKED		
APPROVED	/ /	PROUCT NO.
	SIZE A4 REV A	PILE NAME:

SATA 7+15 夹板1.6 带鱼叉

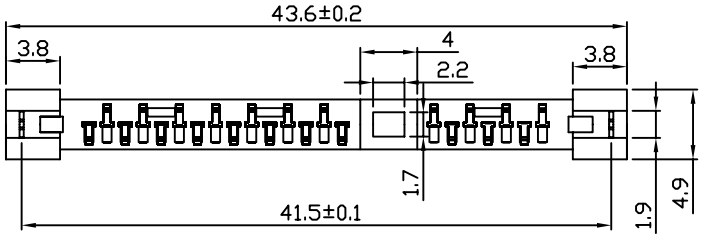

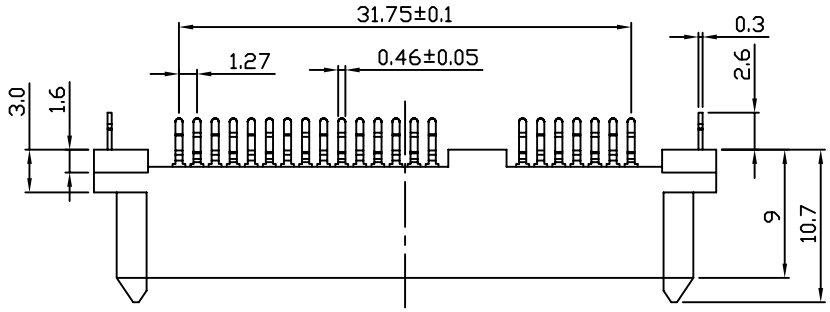

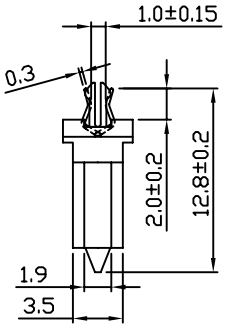

SPECIFICATIONS

1.MATERIAL:
- Housig: LCP UL 94V-0
- Color: Black
- Contact: Phosphor bronze
- Peg: Brass

2.FINISH:

Contact: 3u" Gold/Tin platig on contact area

100u" min.Tin-Lead Plating on soldertails

50u" min.Nickel underplating over all

PEG: 100u"min.Tin-Lead plating on soldertails

50u"min.Nickel underplating over all

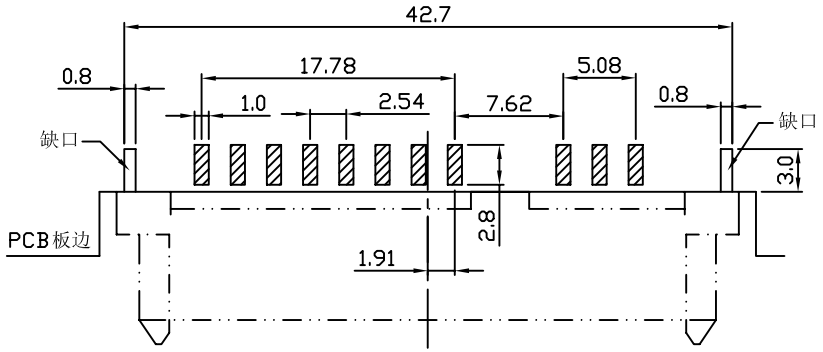

(A面)

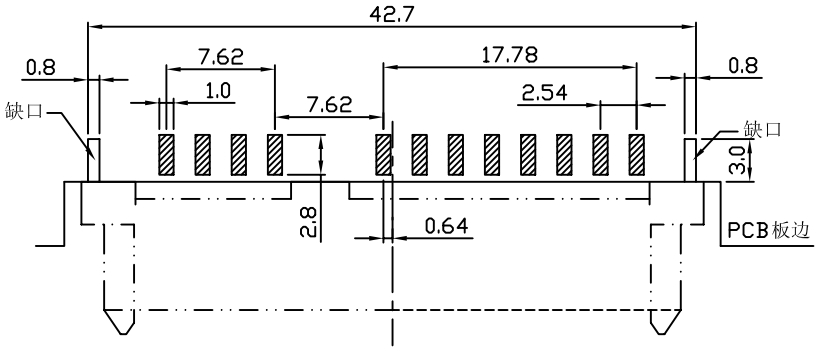

(B面)

PCB LAYOUT

UNLESS OTHEWIXE SPECIFIED TOLERANCE ANG ±5° 0 ±0.3 0.0 ±0.2 0.00 ±0.05	KLS Electronic co.,LTD
SCALE	UNIT: mm
DRAWN LI BEI LIN	07/21/07
CHECKED	
APPROVED	/ /
SIZE A4 REV A	
DRAWM NAME: SATA 7+15	
PROUCT NO.	
PILE NAME:	

SATA 7+15 夹板1.0 带鱼叉

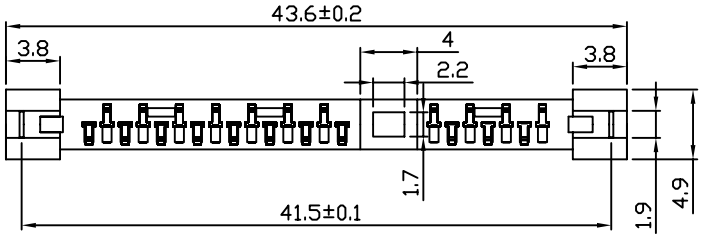

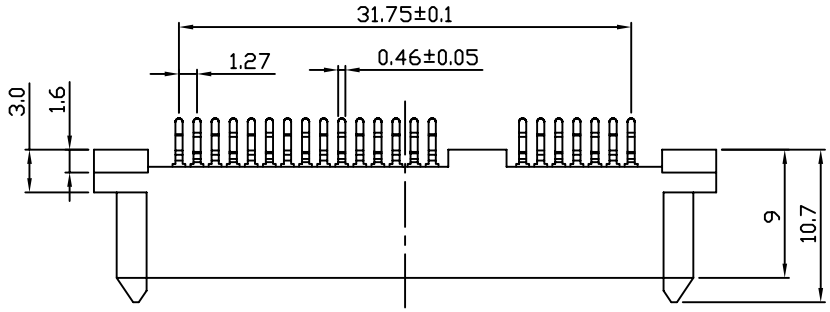

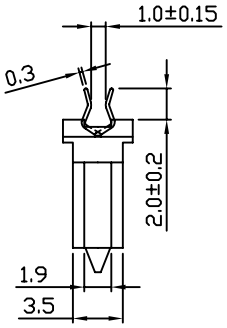

SPECIFICATIONS

1.MATERIAL:
- Housig: LCP UL 94V-0
- Color: Black
- Contact: Phosphor bronze
- Peg: Brass

2.FINISH:
- Contact: 3u" Gold/Tin platig on contact area
- 100u" min.Tin-Lead Plating on soldertails
- 50u" min.Nickel underplating over all
- PEG: 100u"min.Tin-Lead plating on soldertails
- 50u"min.Nickel underplating over all

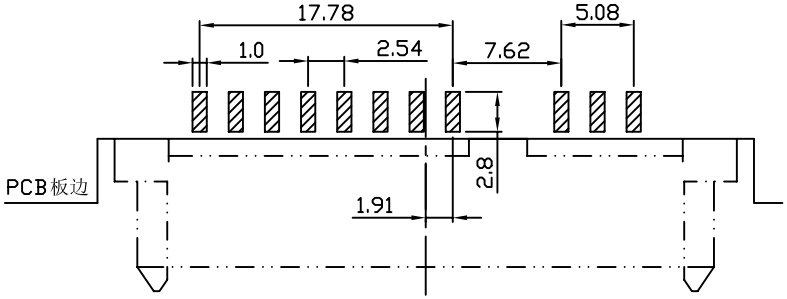

(A面)

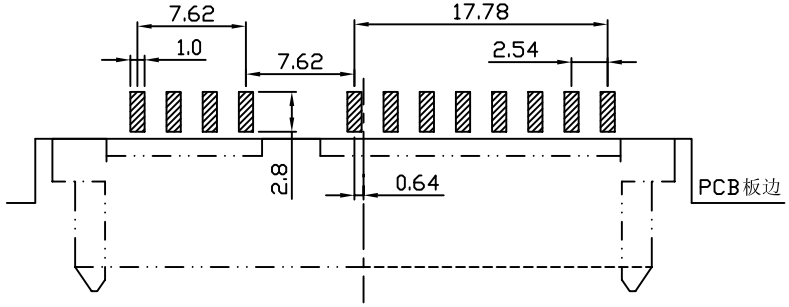

(B面)

PCB LAYOUT

UNLESS OTHEWIXE SPECIFIED TOLERANCE ANG ±5° 0 ±0.3 .0 ±0.2 .00 ±0.05	KLS Electronic co.,LTD
SCALE	UNIT: mm
DRAWN LI BEI LIN	07/21/07
CHECKED	
APPROVED	/ /
SIZE A4 REV A	

DRAWM NAME: SATA 7+15

PROUCT NO.

PILE NAME:

SATA 7+15 夹板1.0 不带鱼叉

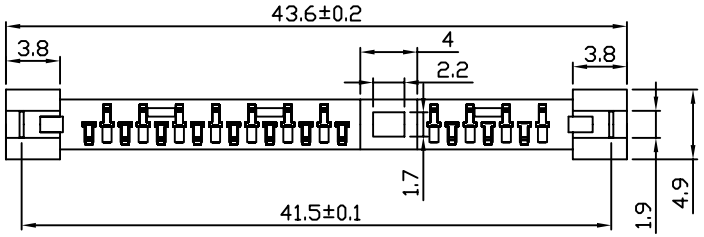

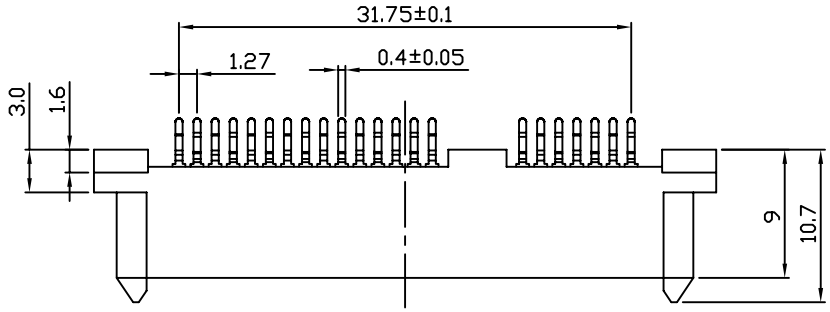

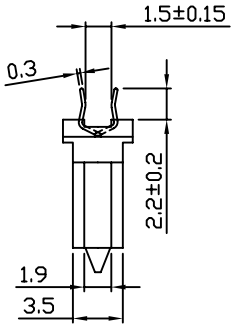

SPECIFICATIONS

1.MATERIAL:
- Housig: LCP UL 94V-0
- Color: Black
- Contact: Phosphor bronze
- Peg: Brass

2.FINISH:
- Contact: 3u" Gold/Tin platig on contact area
- 100u" min.Tin-Lead Plating on soldertails
- 50u" min.Nickel underplating over all
- PEG: 100u"min.Tin-Lead plating on soldertails
- 50u"min.Nickel underplating over all

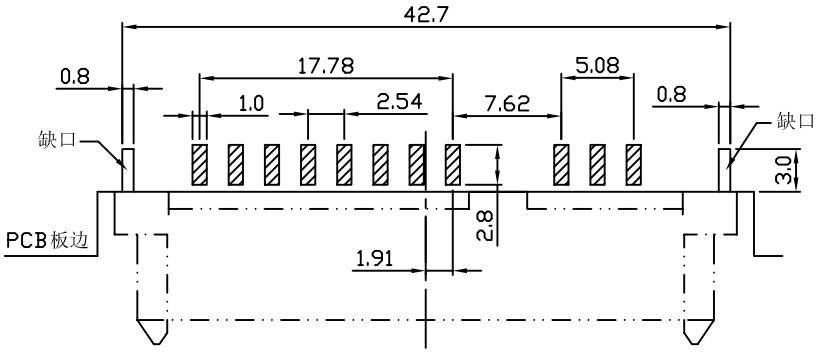

(A面)

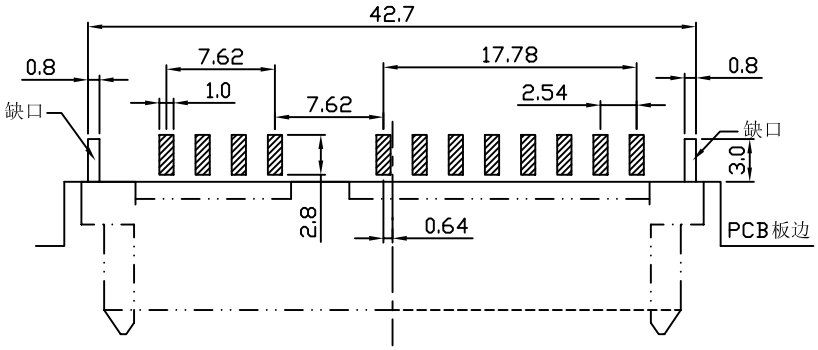

(B面)

PCB LAYOUT

UNLESS OTHEWIXE SPECIFIED TOLERANCE ANG ±5° 0 ±0.3 .0 ±0.2 .00 ±0.05	KLS Electronic co.,LTD
SCALE	UNIT: mm
DRAWN LI BEI LIN	07/21/07
CHECKED	
APPROVED	/ /
SIZE A4 REV A	

DRAWM NAME: SATA 7+15

PROUCT NO.

PILE NAME:

SATA 7+15 夹板1.6 不带鱼叉

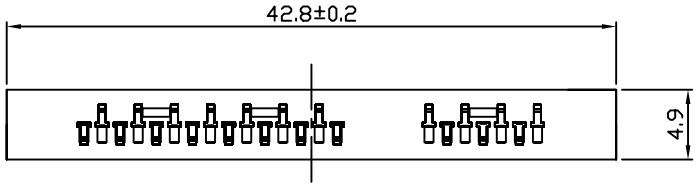



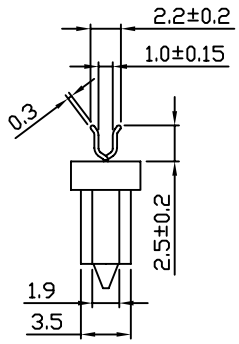

SPECIFICATIONS

1.MATERIAL:
- Housig: LCP UL 94V-0
- Color: Black
- Contact: Phosphor bronze
- Peg: Brass

2.FINISH:

Contact: 3u" Gold/Tin platig on contact area

100u" min.Tin-Lead Plating on soldertails

50u" min.Nickel underplating over all

PEG: 100u"min.Tin-Lead plating on soldertails

50u"min.Nickel underplating over all

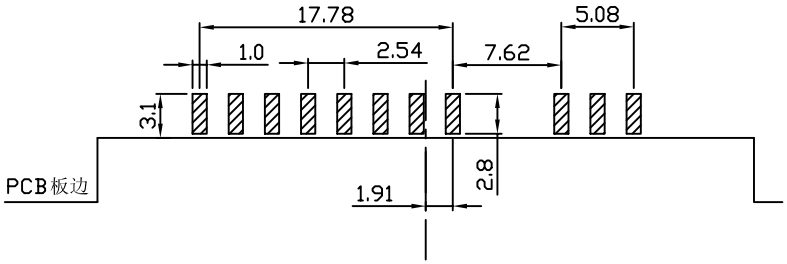

(A面)

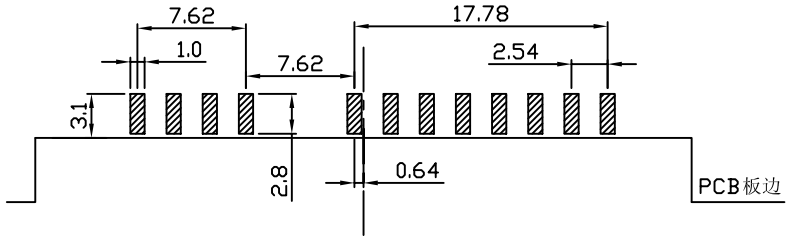

(B面)

PCB LAYOUT

UNLESS OTHEWIXE SPECIFIED TOLERANCE ANG ±5° 0 ±0.3 0.0 ±0.2 0.00 ±0.05	KLS Electronic co.,LTD
SCALE	UNIT: mm
DRAWN LI BEI LIN	18/09/08
CHECKED	
APPROVED	/ /
SIZE A4 REV A	
DRAWM NAME: SATA 7+15	
PROUCT NO.	
PILE NAME:	

SATA 7+15 夹板1.2 H7.2

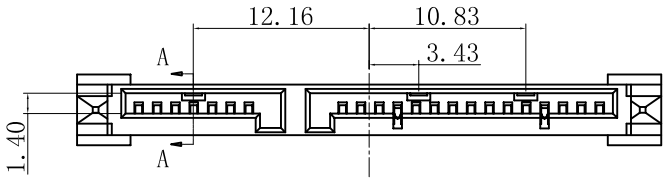

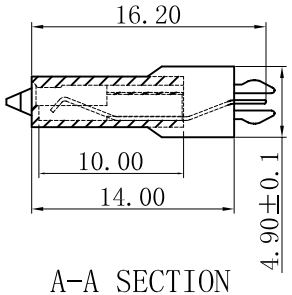

A-A SECTION

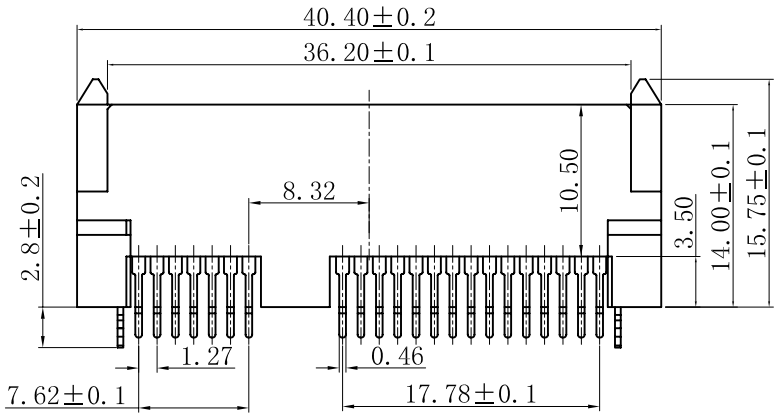

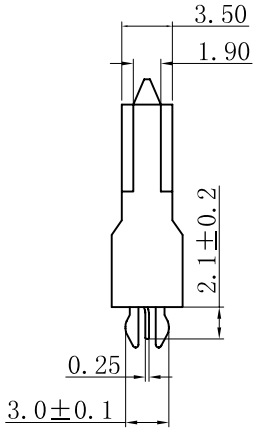

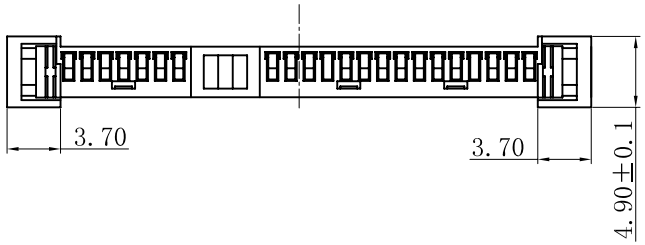

SPECIFICATIONS

1.MATERIAL:
- Housig: LCP UL 94V-0
- Color: Black
- Contact: Phosphor bronze
- Peg: Brass

2.FINISH:
- Contact: 3u" Gold/Tin platig on contact area
- 100u" min.Tin-Lead Plating on soldertails
- 50u" min.Nickel underplating over all
- PEG: 100u"min.Tin-Lead plating on soldertails
- 50u"min.Nickel underplating over all

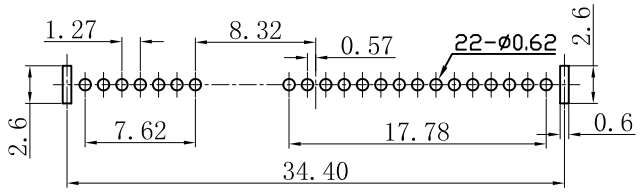

PCB LAYOUT

UNLESS OTHEWIXE SPECIFIED TOLERANCE ANG ±5° 0 ±0.3 0.0 ±0.2 0.00 ±0.05			KLS Electronic co.,LTD
SCALE	UNIT: mm		
DRAWN LI BEI LIN	07/03/09		DRAWM NAME Pin header 2.0mm
CHECKED			
APPROVED	/ /		PROUCT NO.
	SIZE A4	REV A	PILE NAME:

SATA 7+15 DIP W3.5 增高型 带鱼叉 PC2.1

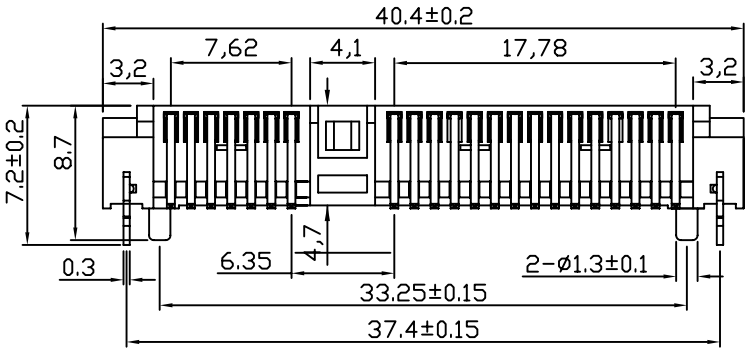

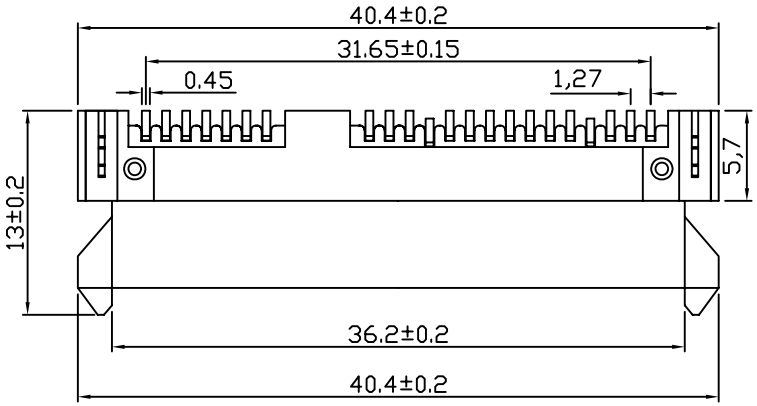

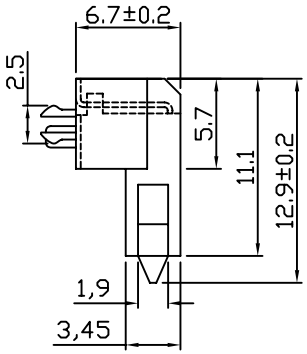

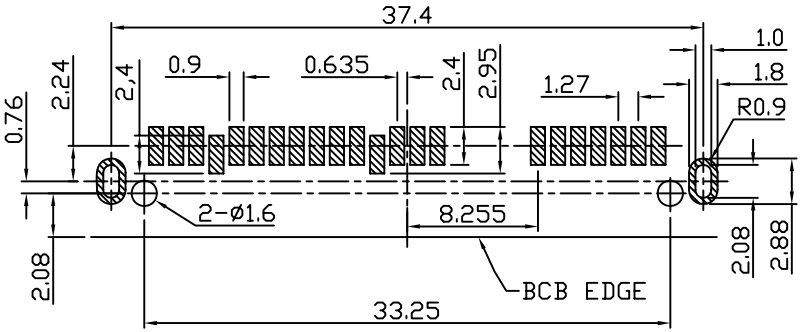

RECOMMEND PCB LAYOUT(T=1.2)

PCB TOLERANCE:±0.05

SPECIFICATIONS

1.MATERIAL:
- Housig: LCP UL 94V-0
- Color: Black
- Contact: Phosphor bronze
- Peg: Brass

2.FINISH:
- Contact: 3u" Gold/Tin platig on contact area
  100u" min.Tin-Lead Plating on soldertails
  50u" min.Nickel underplating over all
- PEG: 100u"min.Tin-Lead plating on soldertails
  50u"min.Nickel underplating over all

UNLESS OTHEWIXE SPECIFIED TOLERANCE	
ANG	±5°
0	±0.3
0.0	±0.2
0.00	±0.05

KLS Electronic co.,LTD

SCALE	UNIT: mm	DRAWM NAME
DRAWN LI BEI LIN	07/21/07	
CHECKED		
APPROVED	/ /	PROUCT NO.
	SIZE A4 REV A	PILE NAME:

SATA 7+15P H6.74 SMT 板上 带鱼叉

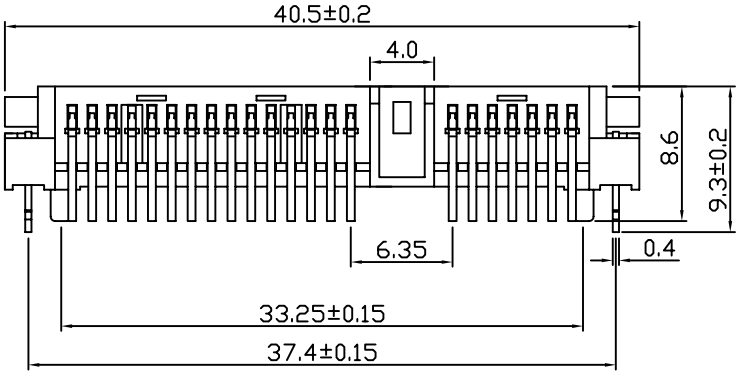

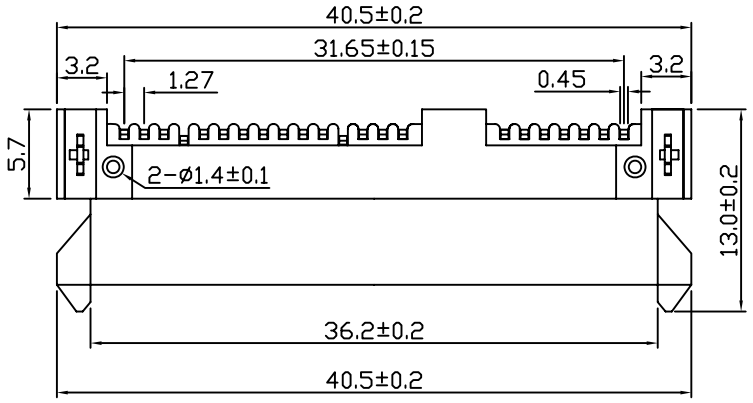

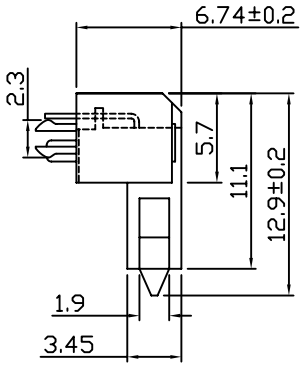

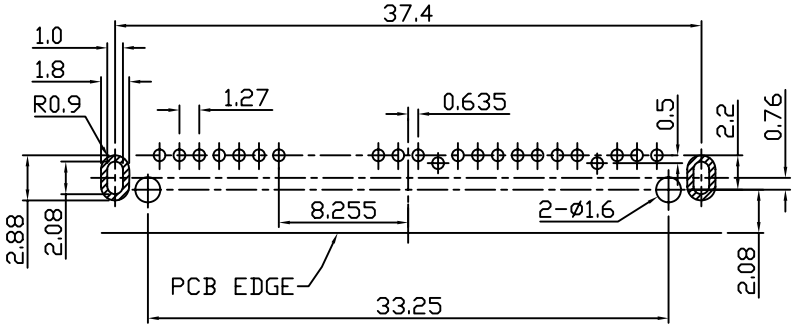

RECOMMEND PCB LAYOUT(T=1.2)

PCB TOLERANCE:±0.05

SPECIFICATIONS

1.MATERIAL:
- Housig: LCP UL 94V-0
- Color: Black
- Contact: Phosphor bronze
- Peg: Brass

2.FINISH:
- Contact: 3u" Gold/Tin platig on contact area
  100u" min.Tin-Lead Plating on soldertails
  50u" min.Nickel underplating over all
- PEG: 100u"min.Tin-Lead plating on soldertails
  50u"min.Nickel underplating over all

UNLESS OTHEWIXE SPECIFIED TOLERANCE	
ANG	±5°
0	±0.3
0.0	±0.2
0.00	±0.05

KLS Electronic co.,LTD

SCALE	UNIT: mm	
DRAWN LI BEI LIN	24/03/09	DRAWM NAME
CHECKED		
APPROVED	/ /	PROUCT NO.
	SIZE A4 REV A	PILE NAME:

SATA 7+15 90° H6.74 板下

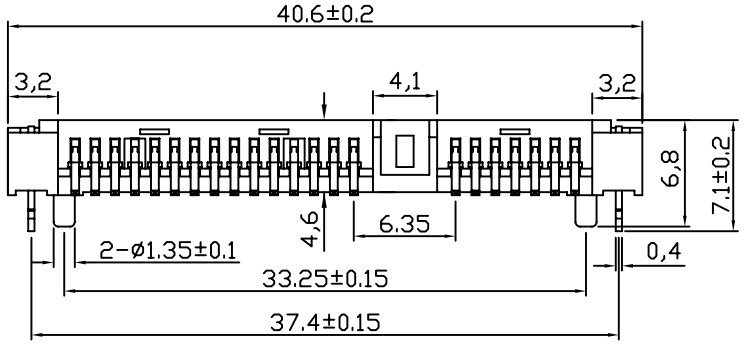

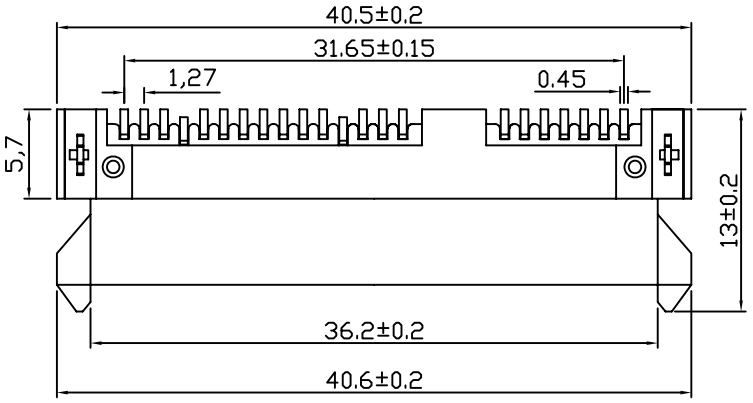

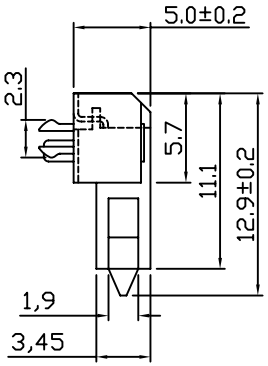

SPECIFICATIONS

1.MATERIAL:
- Housig: LCP UL 94V-0
- Color: Black
- Contact: Phosphor bronze
- Peg: Brass

2.FINISH:
- Contact: 3u" Gold/Tin platig on contact area
  100u" min.Tin-Lead Plating on soldertails
  50u" min.Nickel underplating over all
- PEG: 100u"min.Tin-Lead plating on soldertails
  50u"min.Nickel underplating over all

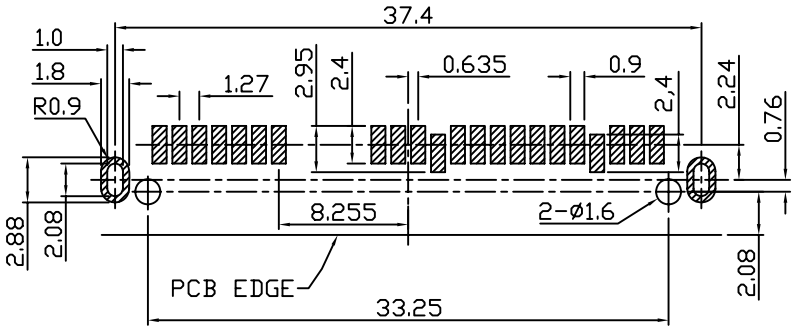

RECOMMEND PCB LAYOUT(T=1.2)

PCB TOLERANCE:±0.05

UNLESS OTHEWIXE SPECIFIED TOLERANCE	
ANG	±5'
0	±0.3
0.0	±0.2
0.00	±0.05

KLS Electronic co.,LTD

SCALE	UNIT: mm	DRAWM NAME
DRAWN LI BEI LIN	07/21/07	
CHECKED		
APPROVED	/ /	PROUCT NO.
	SIZE A4 REV A	PILE NAME:

SATA 7+15 SMT H5.0 下接触

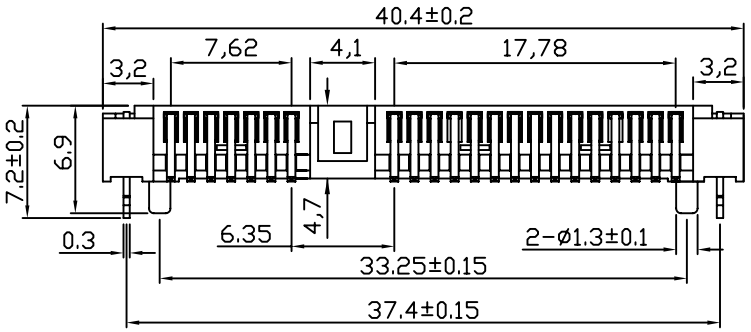

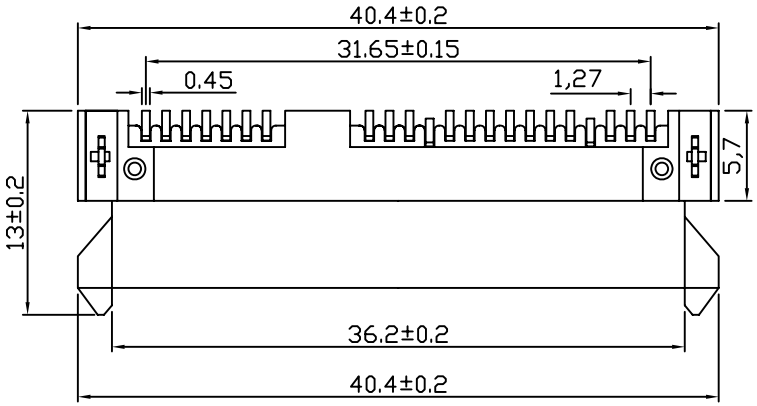

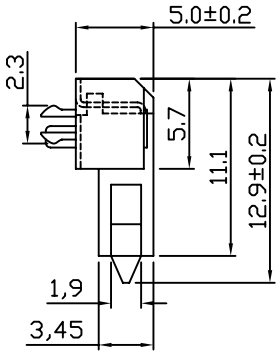

SPECIFICATIONS

1.MATERIAL:
- Housig: LCP UL 94V-0
- Color: Black
- Contact: Phosphor bronze
- Peg: Brass

2.FINISH:
- Contact: 3u" Gold/Tin platig on contact area
- 100u" min.Tin-Lead Plating on soldertails
- 50u" min.Nickel underplating over all
- PEG: 100u"min.Tin-Lead plating on soldertails
- 50u"min.Nickel underplating over all

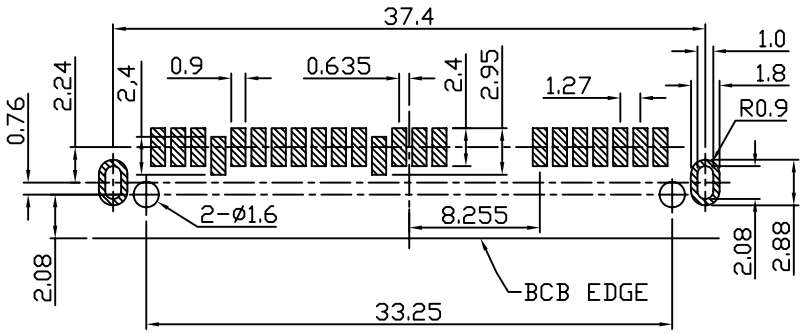

RECOMMEND PCB LAYOUT(T=1.2)

PCB TOLERANCE:±0.05

UNLESS OTHEWIXE SPECIFIED TOLERANCE ANG ±5° 0 ±0.3 0.0 ±0.2 0.00 ±0.05	KLS Electronic co.,LTD
SCALE	UNIT: mm
DRAWN LI BEI LIN	07/21/07
CHECKED	
APPROVED	/ /
SIZE A4 REV A	

DRAWM NAME

PROUCT NO.

PILE NAME:

SATA 7+15P H5.0 SMT 板上 带鱼叉

SPECIFICATIONS

1.MATERIAL:
- Housig: LCP UL 94V-0
- Color: Black
- Contact: Phosphor bronze
- Peg: Brass

2.FINISH:
- Contact: 3u" Gold/Tin platig on contact area
  100u" min.Tin-Lead Plating on soldertails
  50u" min.Nickel underplating over all
- PEG: 100u"min.Tin-Lead plating on soldertails
  50u"min.Nickel underplating over all

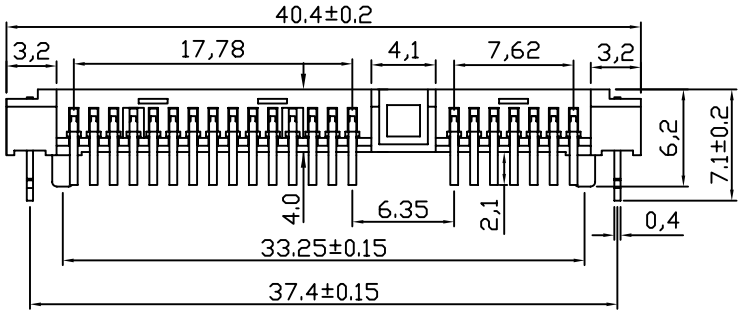

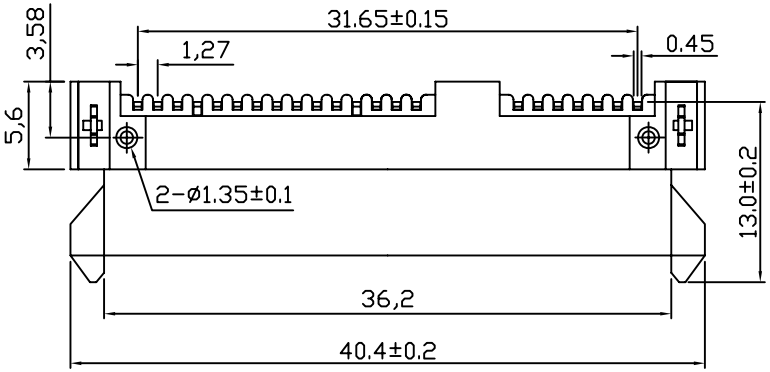

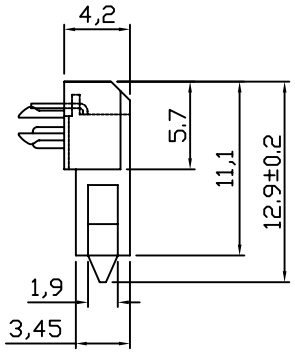

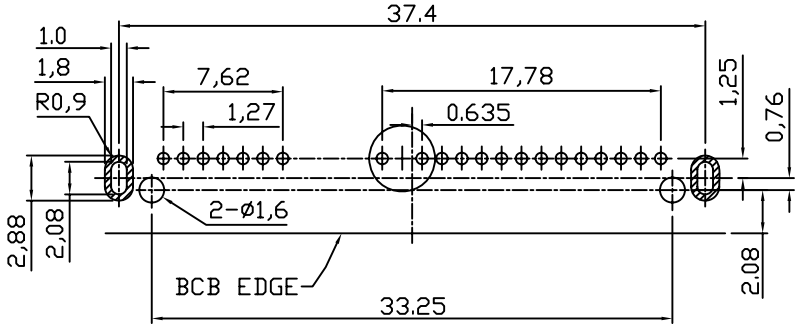

RECOMMEND PCB LAYOUT(T=1.2)

PCB TOLERANCE:±0 05

UNLESS OTHEWIXE SPECIFIED TOLERANCE ANG ±5° 0 ±0.3 0.0 ±0.2 0.00 ±0.05		KLS Electronic co.,LTD
SCALE	UNIT: mm	
DRAWN LI BEI LIN	23/02/09	DRAWM NAME
CHECKED		
APPROVED	/ /	PROUCT NO.
	SIZE A4 REV A	PILE NAME:

SATA 7+15 90° H4.2 板下

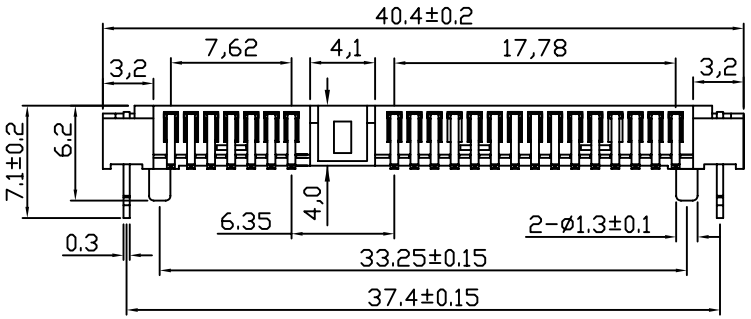

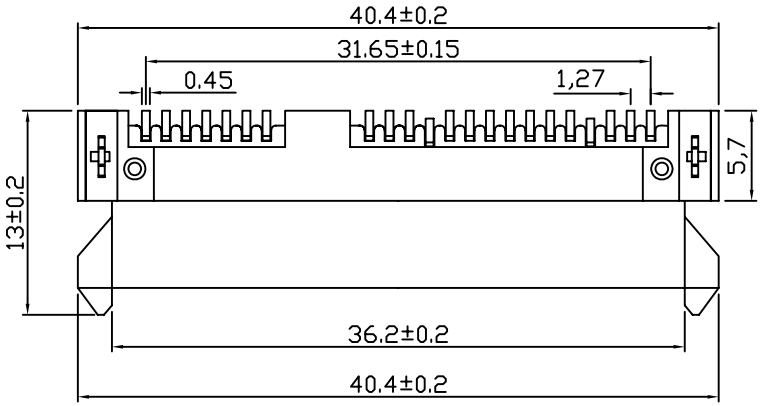

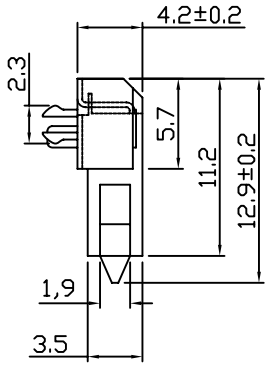

SPECIFICATIONS

1.MATERIAL:
- Housig: LCP UL 94V-0
- Color: Black
- Contact: Phosphor bronze
- Peg: Brass

2.FINISH:
- Contact: 3u" Gold/Tin platig on contact area
- 100u" min.Tin-Lead Plating on soldertails
- 50u" min.Nickel underplating over all
- PEG: 100u"min.Tin-Lead plating on soldertails
- 50u"min.Nickel underplating over all

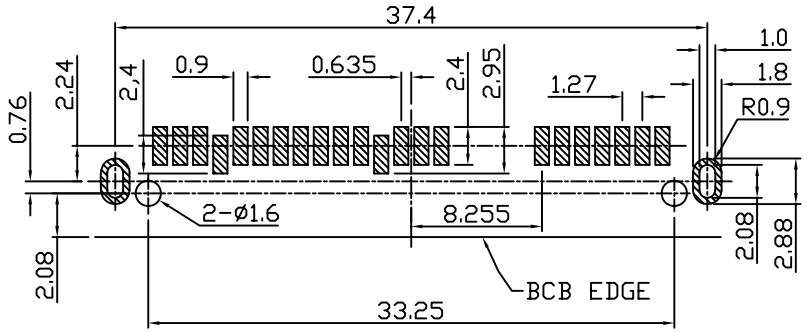

RECOMMEND PCB LAYOUT(T=1.2)

PCB TOLERANCE:±0.05

UNLESS OTHEWIXE SPECIFIED TOLERANCE ANG ±5° 0 ±0.3 .0 ±0.2 .00 ±0.05		KLS Electronic co.,LTD
SCALE	UNIT: mm	
DRAWN LI BEI LIN	07/21/07	DRAWM NAME
CHECKED		
APPROVED	/ /	PROUCT NO.
	SIZE A4 REV A	PILE NAME:

SATA 7+15P H4.2 SMT 板上 带鱼叉

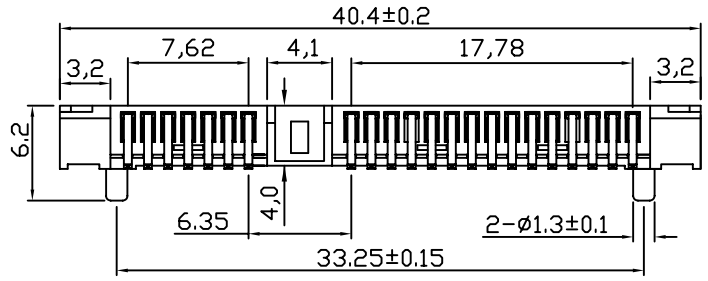

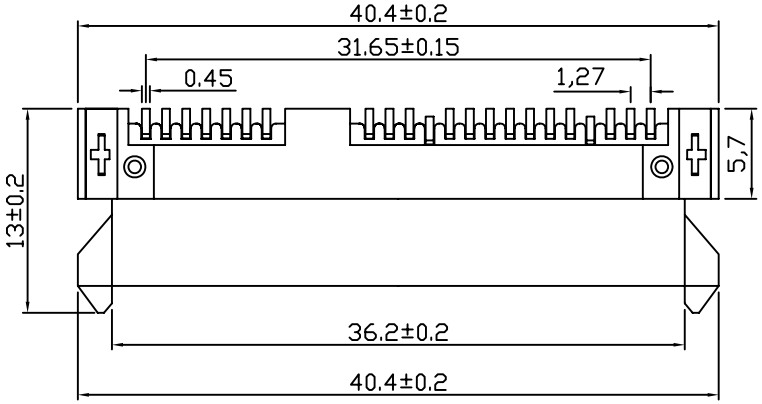

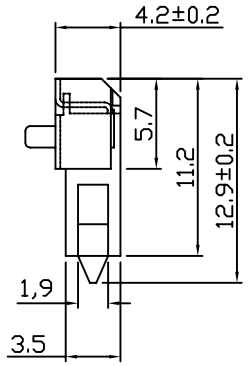

SPECIFICATIONS

1.MATERIAL:
- Housig: LCP UL 94V-0
- Color: Black
- Contact: Phosphor bronze
- Peg: Brass

2.FINISH:
- Contact: 3u" Gold/Tin platig on contact area
- 100u" min.Tin-Lead Plating on soldertails
- 50u" min.Nickel underplating over all
- PEG: 100u"min.Tin-Lead plating on soldertails
- 50u"min.Nickel underplating over all

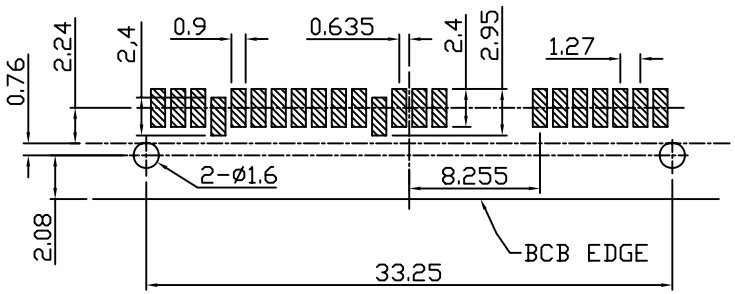

RECOMMEND PCB LAYOUT(T=1.2)

PCB TOLERANCE: ±0.05

UNLESS OTHEWIXE SPECIFIED TOLERANCE		
ANG	±5°	KLS Electronic co.,LTD
0	±0.3	
.0	±0.2	
.00	±0.05	
SCALE	UNIT: mm	
DRAWN LI BEI LIN	07/11/08	DRAWM NAME
CHECKED		
APPROVED	/ /	PROUCT NO.
	SIZE A4 REV A	PILE NAME:

SATA 7+15P H4.2 SMT 板上 不带鱼叉

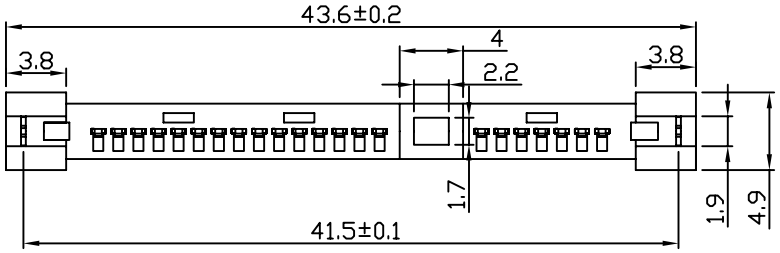

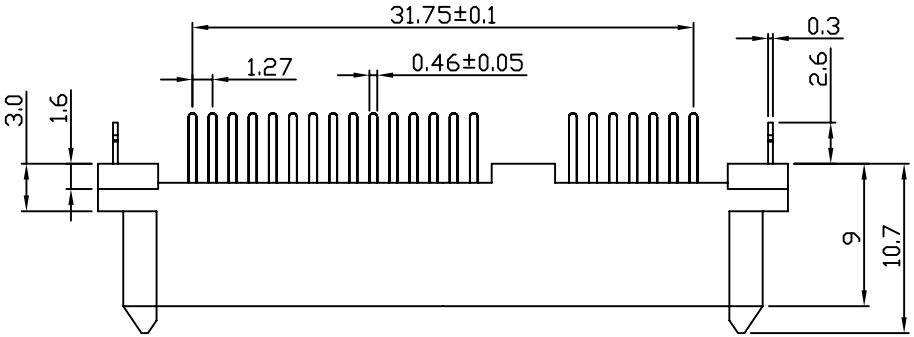

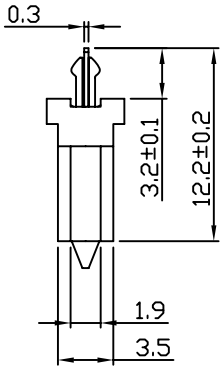

SPECIFICATIONS

1.MATERIAL:
- Housig: LCP UL 94V-0
- Color: Black
- Contact: Phosphor bronze
- Peg: Brass

2.FINISH:
- Contact: 3u" Gold/Tin platig on contact area
- 100u" min.Tin-Lead Plating on soldertails
- 50u" min.Nickel underplating over all
- PEG: 100u"min.Tin-Lead plating on soldertails
- 50u"min.Nickel underplating over all

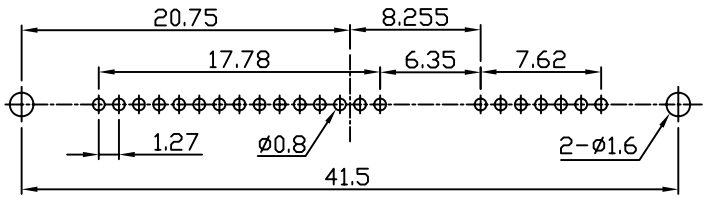

PCB LAYOUT

PCB LAYOUT

UNLESS OTHEWIXE SPECIFIED TOLERANCE ANG ±5° 0 ±0.3 0.0 ±0.2 0.00 ±0.05		KLS Electronic co.,LTD	
SCALE	UNIT: mm		
DRAWN LI BEI LIN	20/12/08	DRAWM NAME	SATA 7+15
CHECKED			
APPROVED	/ /	PROUCT NO.	
	SIZE A4 REV A	PILE NAME:	

SATA 7+15 180° 带鱼叉

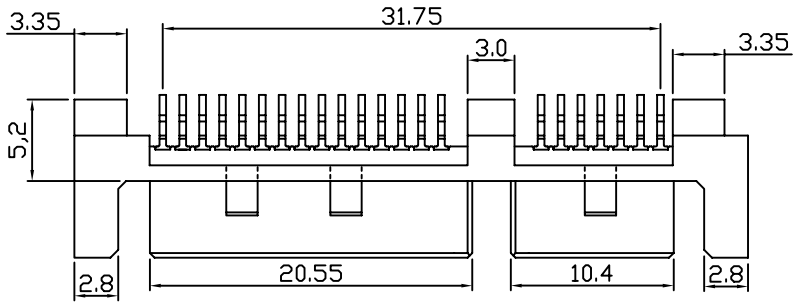

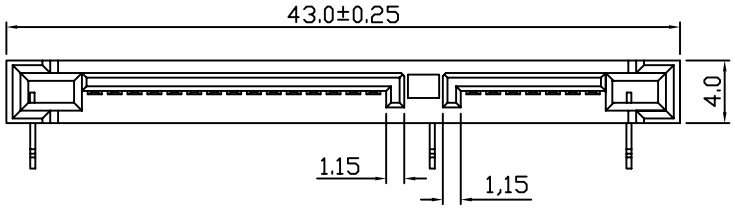

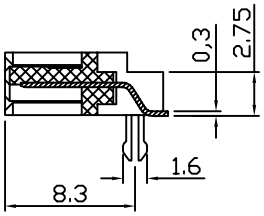

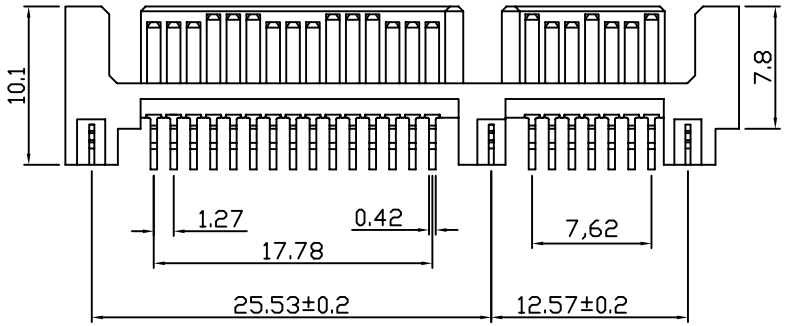

SPECIFICATIONS

1.MATERIAL:
- Housig: LCP UL 94V-0
- Color: Black
- Contact: Phosphor bronze
- Peg: Brass

2.FINISH:
- Contact: 3u" Gold/Tin platig on contact area
- 100u" min.Tin-Lead Plating on soldertails
- 50u" min.Nickel underplating over all
- PEG: 100u"min.Tin-Lead plating on soldertails
- 50u"min.Nickel underplating over all

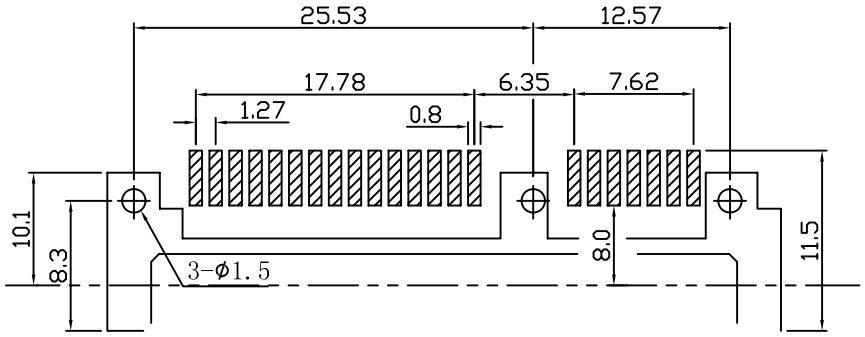

RECOMMEND PCB LAYOUT(T=1.2)

PCB TOLERANCE:±0.05

UNLESS OTHEWIXE SPECIFIED TOLERANCE ANG ±5° 0 ±0.3 0.0 ±0.2 0.00 ±0.05		KLS Electronic co.,LTD	
SCALE	UNIT: mm		
DRAWN LI BEI LIN	31/05/08	DRAWM NAME	SATA 7+15 Pin 公头
CHECKED			
APPROVED	/ /	PROUCT NO.	
	SIZE A4 REV A	PILE NAME:	

SATA 7+15 公座90° 加鱼叉SMT型

SPECIFICATIONS

Current Rating: 3Amps
Insulator Resistance: 5000mΩ Min
Dielectric Withstanding: AC 500V
Operating Temperature: −40°to+105°
Contact Material: Copper alloy
Insrlator Material: Polyester,UL 94V−0 LCP
Finish : Tin,Gold or Duplex plated
Standard : Gold flash all over
Max.Processing Temp: 230C°for 30−60seconds(260C°for 10 secinds)

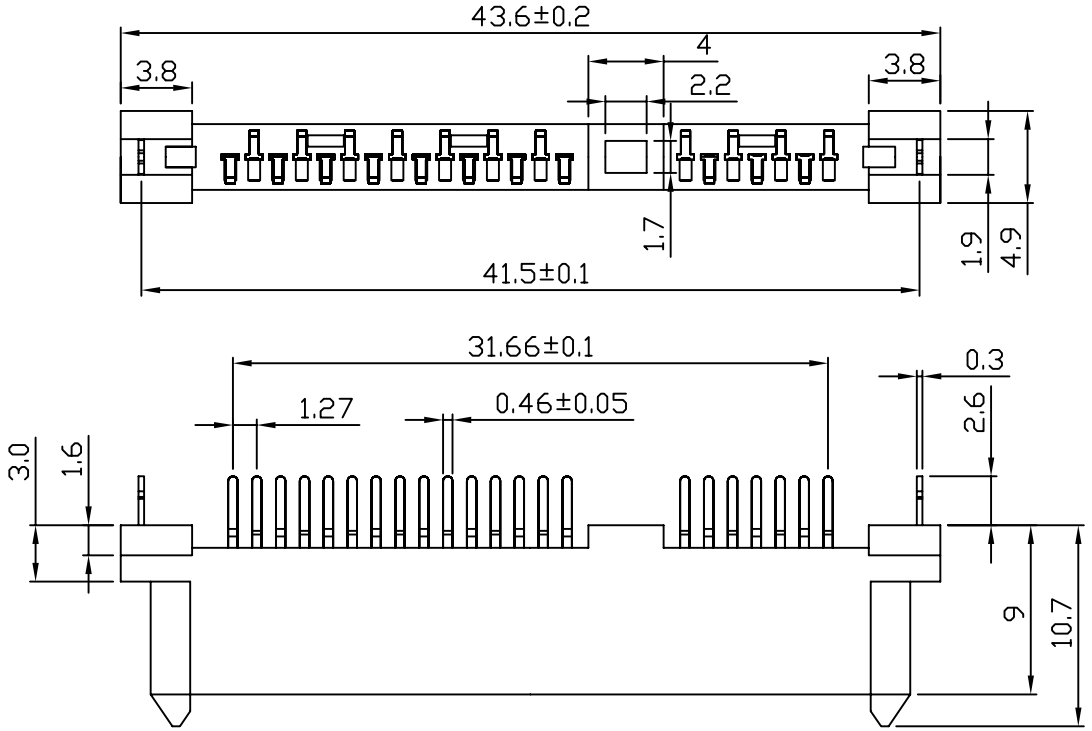

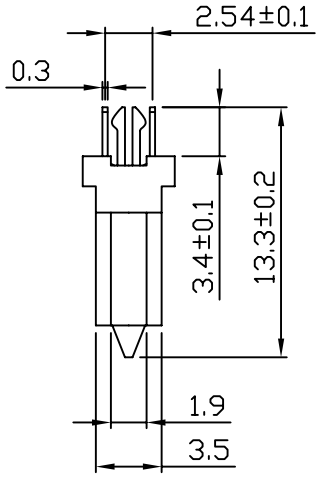

UNLESS OTHEWIXE SPECIFIED TOLERANCE ANG ±5° 0 ±0.3 0.0 ±0.2 0.00 ±0.05		KLS Electronic co.,LTD	
SCALE	UNIT: mm		
DRAWN LI BEI LIN	07/21/07	DRAWM NAME Pin header 2.0mm	
CHECKED			
APPROVED	/ /	PROUCT NO.	
	SIZE A4 REV A	PILE NAME:	

SATA 7+15 90° 短端子

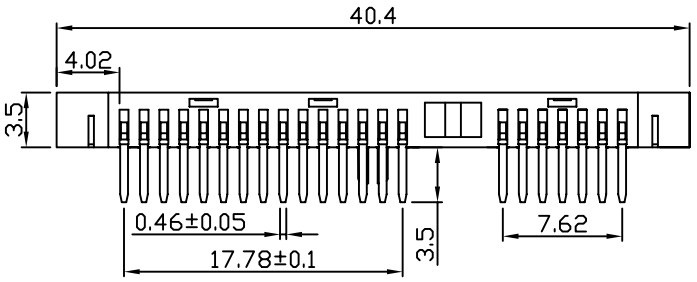

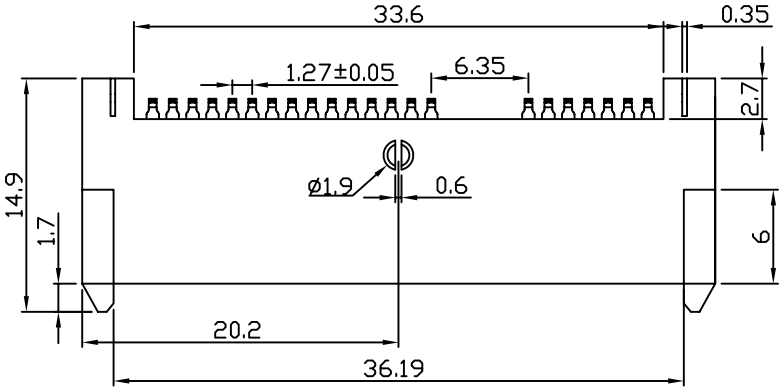

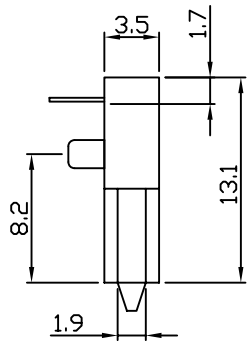

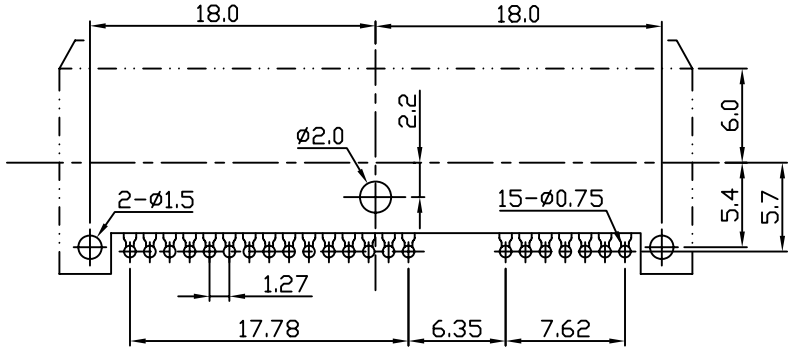

PCB LAYOUT

SPECIFICATIONS

1.MATERIAL:
- Housig: LCP UL 94V-0
- Color: Black
- Contact: Phosphor bronze
- Peg: Brass

2.FINISH:
- Contact: 3u" Gold/Tin platig on contact area
- 100u" min.Tin-Lead Plating on soldertails
- 50u" min.Nickel underplating over all
- PEG: 100u"min.Tin-Lead plating on soldertails
- 50u"min.Nickel underplating over all

SATA 7+15 90° H3.5 不带鱼叉

UNLESS OTHEWIXE SPECIFIED TOLERANCE: ANG ±5°; 0 ±0.3; 0.0 ±0.2; 0.00 ±0.05		KLS Electronic co.,LTD
SCALE	UNIT: mm	
DRAWN LI BEI LIN	07/21/07	DRAWM NAME: SATA 7+15P
CHECKED		
APPROVED	/ /	PROUCT NO.
	SIZE A4 REV A	PILE NAME:

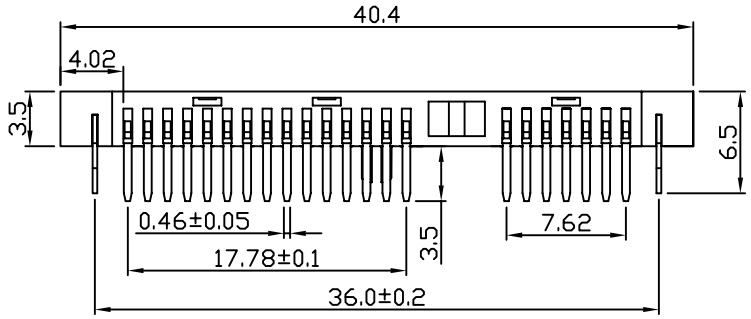

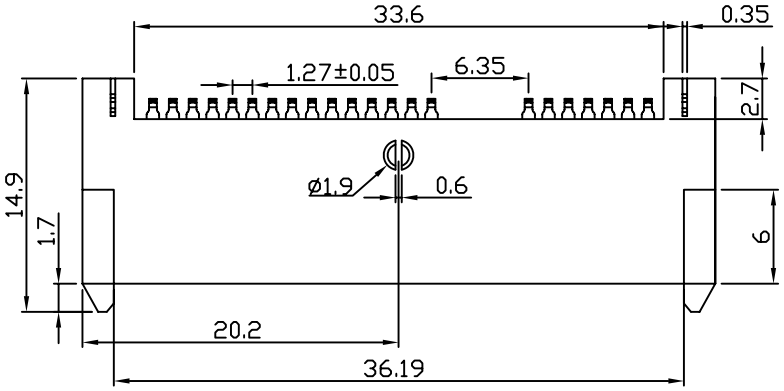

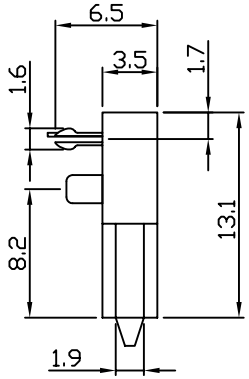

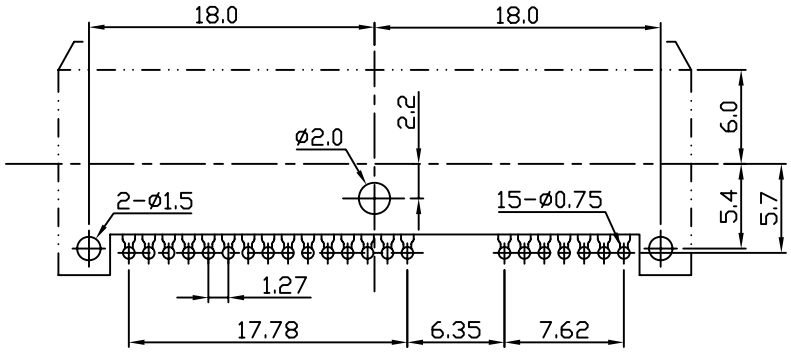

PCB LAYOUT

SPECIFICATIONS

1.MATERIAL:
- Housig: LCP UL 94V-0
- Color: Black
- Contact: Phosphor bronze
- Peg: Brass

2.FINISH:
- Contact: 3u" Gold/Tin platig on contact area
- 100u" min.Tin-Lead Plating on soldertails
- 50u" min.Nickel underplating over all
- PEG: 100u"min.Tin-Lead plating on soldertails
- 50u"min.Nickel underplating over all

UNLESS OTHEWIXE SPECIFIED TOLERANCE ANG ±5° 0 ±0.3 0.0 ±0.2 0.00 ±0.05		KLS Electronic co.,LTD	
SCALE	UNIT: mm		
DRAWN LI BEI LIN	07/21/07	DRAWM NAME	SATA 7+15P
CHECKED			
APPROVED	/ /	PROUCT NO.	
	SIZE A4 REV A	PILE NAME:	

SATA 7+15 90° H3.5 带鱼叉

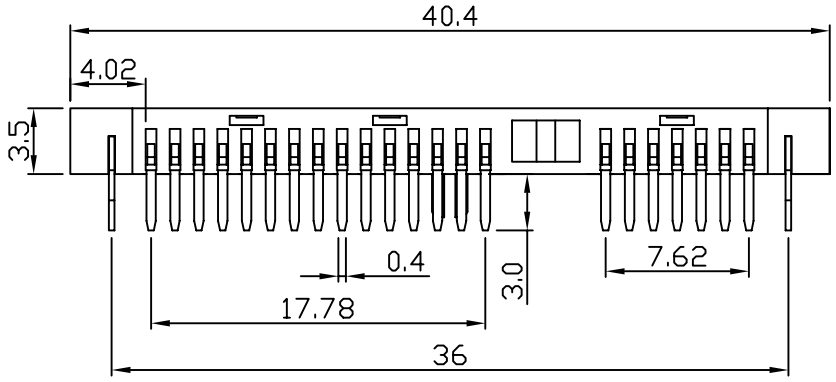

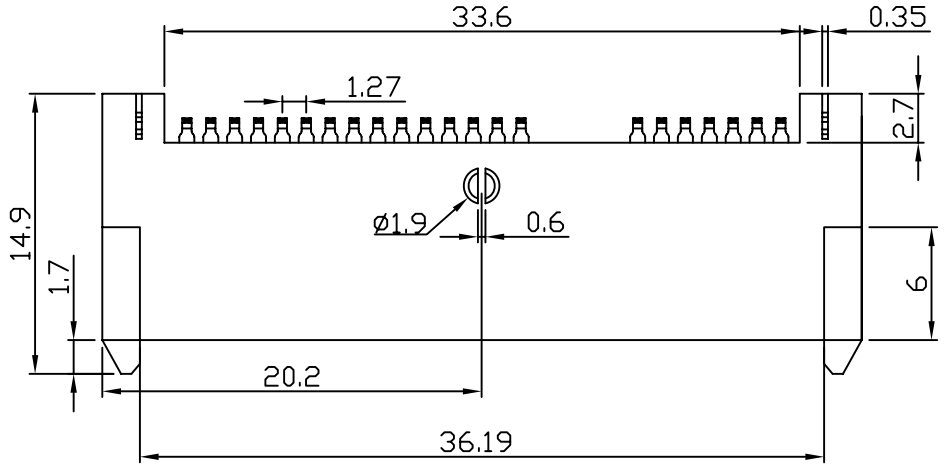

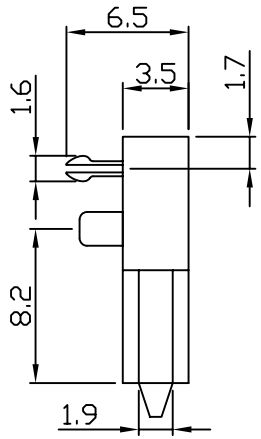

SPECIFICATIONS

1.MATERIAL:
- Housig: LCP UL 94V-0
- Color: Black
- Contact: Phosphor bronze
- Peg: Brass

2.FINISH:
- Contact: 3u" Gold/Tin platig on contact area
- 100u" min.Tin-Lead Plating on soldertails
- 50u" min.Nickel underplating over all
- PEG: 100u"min.Tin-Lead plating on soldertails
- 50u"min.Nickel underplating over all

SATA 7+15 90°

UNLESS OTHEWIXE SPECIFIED TOLERANCE: ANG ±5°, 0 ±0.3, .0 ±0.2, .00 ±0.05		KLS Electronic co.,LTD
SCALE	UNIT: mm	
DRAWN 李北林	07/21/07	DRAWM NAME: Pin header 2.0mm
CHECKED		
APPROVED	/ /	PROUCT NO.
	SIZE A4 REV A	PILE NAME:

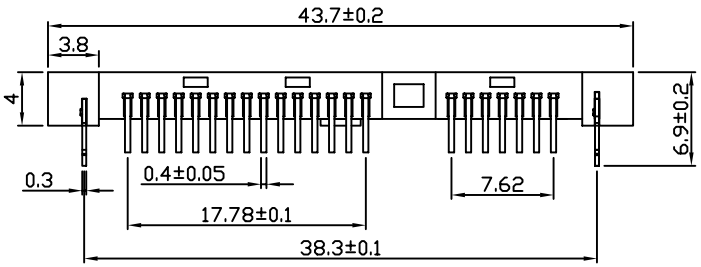

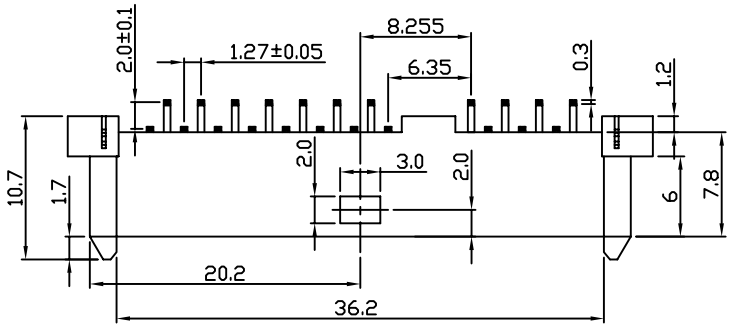

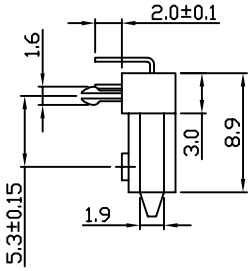

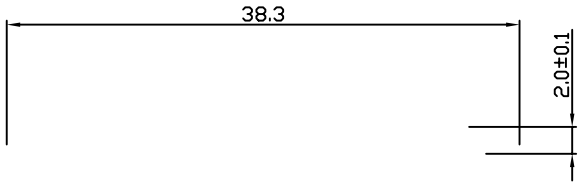

SPECIFICATIONS

1.MATERIAL:
- Housig: LCP UL 94V-0
- Color: Black
- Contact: Phosphor bronze
- Peg: Brass

2.FINISH:
- Contact: 3u" Gold/Tin platig on contact area
- 100u" min.Tin-Lead Plating on soldertails
- 50u" min.Nickel underplating over all
- PEG: 100u"min.Tin-Lead plating on soldertails
- 50u"min.Nickel underplating over all

PCB LAYOUT

UNLESS OTHEWIXE SPECIFIED TOLERANCE ANG ±5° 0 ±0.3 0.0 ±0.2 0.00 ±0.05	KLS Electronic co.,LTD
SCALE / UNIT: mm	
DRAWN LI BEI LIN 21/08/08	DRAWM NAME SATA7+15
CHECKED	
APPROVED / /	PROUCT NO.
SIZE A4 REV A	PILE NAME:

SATA 7+15 90° H7.8 中间带凸台

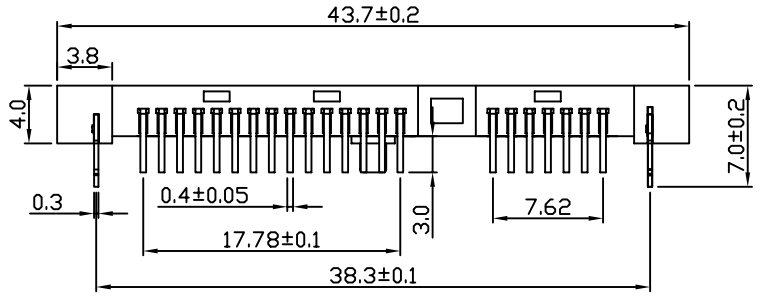

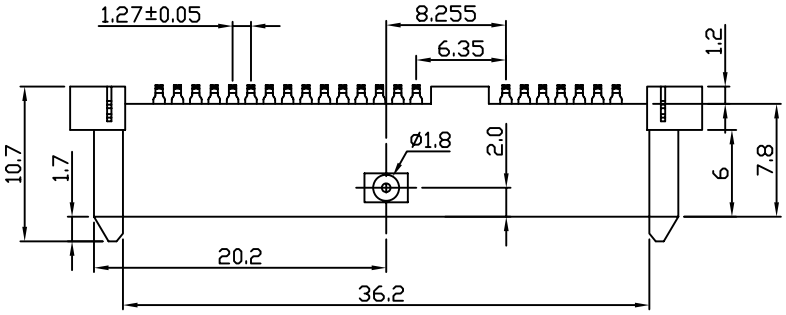

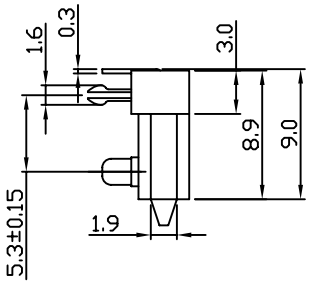

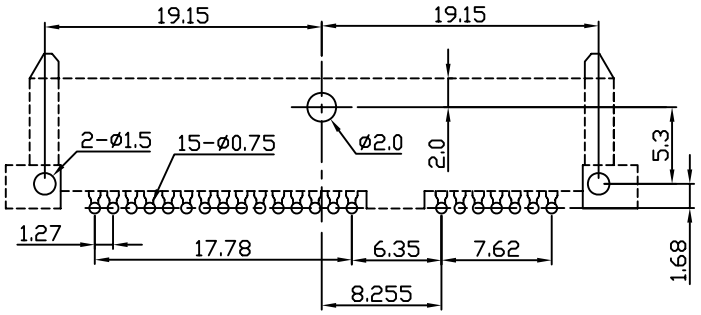

PCB LAYOUT

SPECIFICATIONS

1.MATERIAL:
- Housig: LCP UL 94V-0
- Color: Black
- Contact: Phosphor bronze
- Peg: Brass

2.FINISH:
- Contact: 3u" Gold/Tin platig on contact area
- 100u" min.Tin-Lead Plating on soldertails
- 50u" min.Nickel underplating over all
- PEG: 100u"min.Tin-Lead plating on soldertails
- 50u"min.Nickel underplating over all

UNLESS OTHEWIXE SPECIFIED TOLERANCE	
ANG	±5°
0	±0.3
0.0	±0.2
0.00	±0.05

KLS Electronic co.,LTD

SCALE	UNIT: mm	
DRAWN LI BEI LIN	21/08/08	DRAWM NAME
CHECKED		
APPROVED	/ /	PROUCT NO.
	SIZE A4 REV A	PILE NAME:

SATA 7+15 90° H4.0 中间带柱

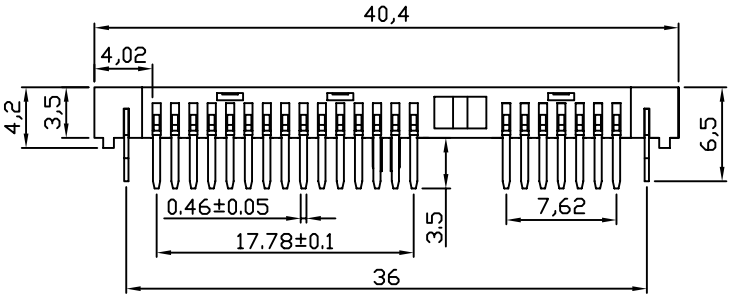

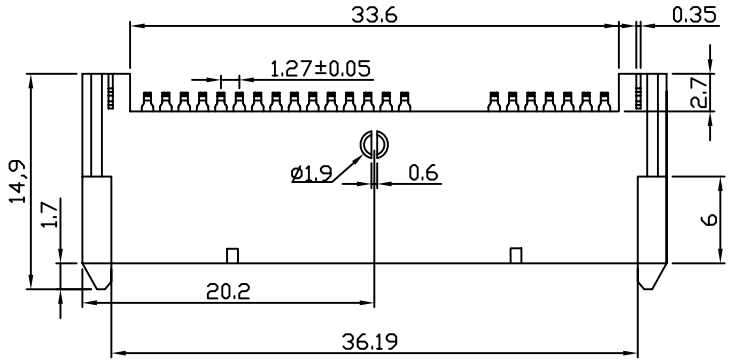

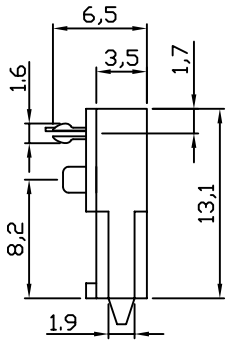

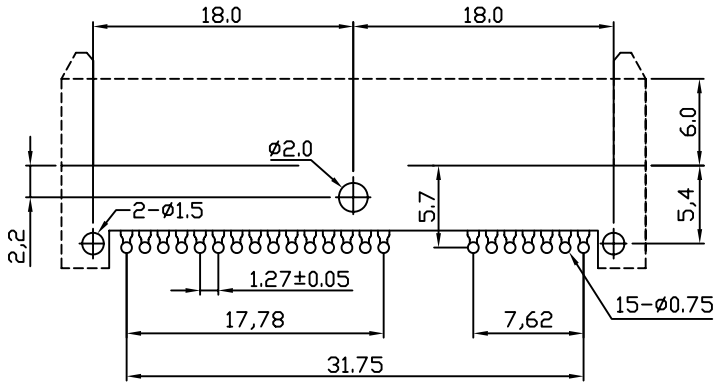

SPECIFICATIONS

1.MATERIAL:
- Housig: LCP UL 94V-0
- Color: Black
- Contact: Phosphor bronze
- Peg: Brass

2.FINISH:
- Contact: 3u" Gold/Tin platig on contact area
- 100u" min.Tin-Lead Plating on soldertails
- 50u" min.Nickel underplating over all
- PEG: 100u"min.Tin-Lead plating on soldertails
- 50u"min.Nickel underplating over all

RECOMMEND PCB LAYOUT

SATA 7+15 90° 板下

UNLESS OTHEWIXE SPECIFIED TOLERANCE: ANG ±5°; 0 ±0.3; 0.0 ±0.2; 0.00 ±0.05		KLS Electronic co.,LTD
SCALE	UNIT: mm	
DRAWN LI BEI LIN	09/21/07	DRAWM NAME: Pin header 2.0mm
CHECKED		
APPROVED	/ /	PROUCT NO.
	SIZE A4 REV A	PILE NAME:

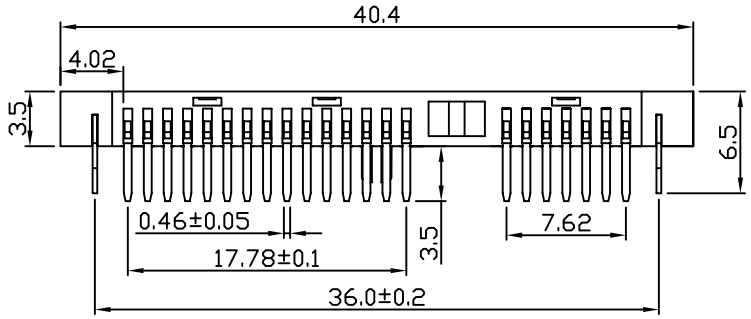

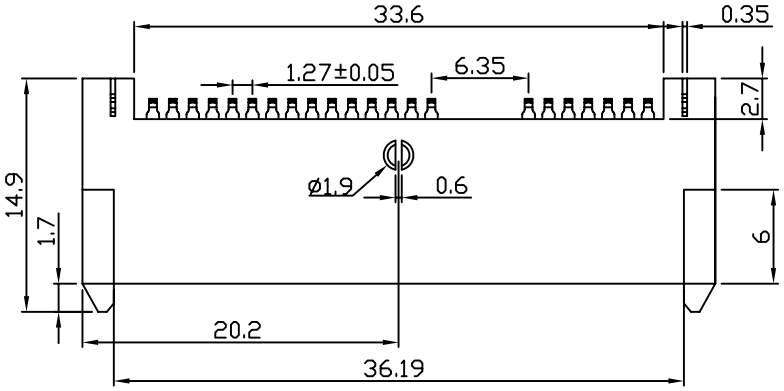

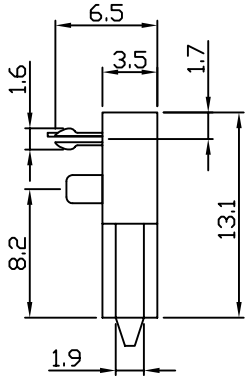

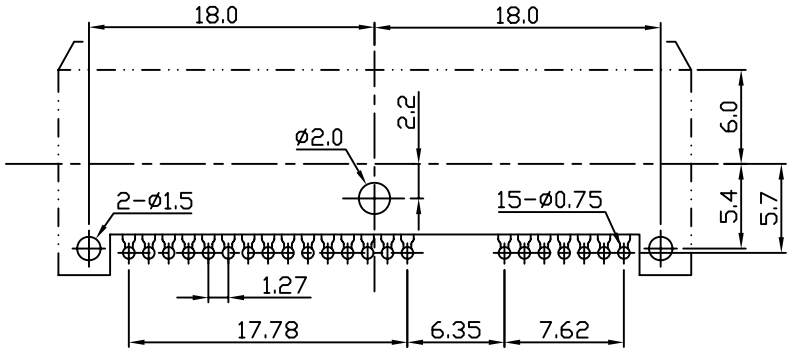

PCB LAYOUT

SPECIFICATIONS

1.MATERIAL:
- Housig: LCP UL 94V-0
- Color: Black
- Contact: Phosphor bronze
- Peg: Brass

2.FINISH:
- Contact: 3u" Gold/Tin platig on contact area
- 100u" min.Tin-Lead Plating on soldertails
- 50u" min.Nickel underplating over all
- PEG: 100u"min.Tin-Lead plating on soldertails
- 50u"min.Nickel underplating over all

UNLESS OTHEWIXE SPECIFIED TOLERANCE ANG ±5° 0 ±0.3 0.0 ±0.2 0.00 ±0.05		KLS Electronic co.,LTD	
SCALE	UNIT: mm		
DRAWN LI BEI LIN	07/21/07	DRAWM NAME	SATA 7+15P
CHECKED			
APPROVED	/ /	PROUCT NO.	
	SIZE A4 REV A	PILE NAME:	

SATA 7+15 90° H3.5 带鱼叉

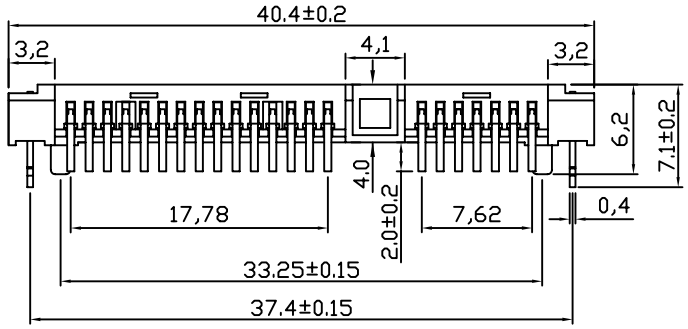

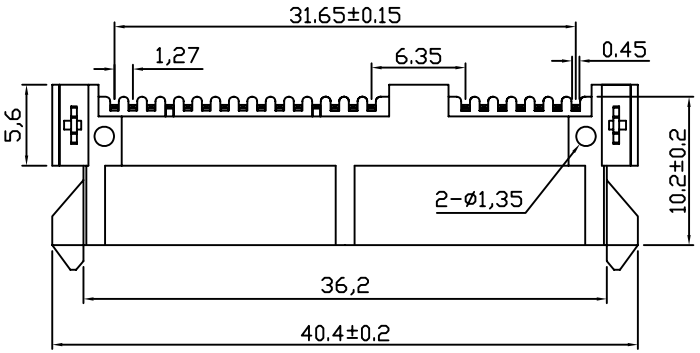

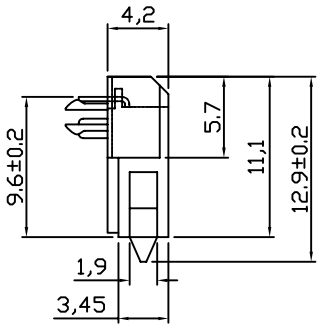

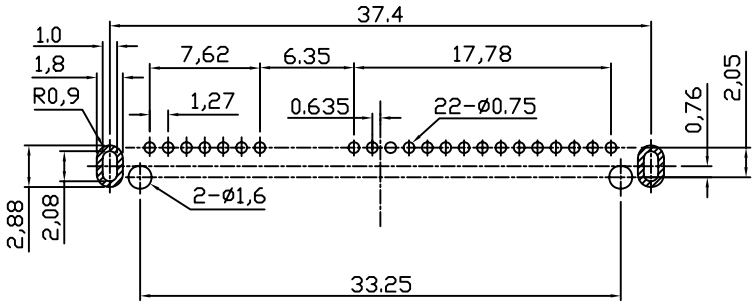

RECOMMEND PCB LAYOUT(T=1.2)

PCB TOLERANCE:±0.05

SPECIFICATIONS

1.MATERIAL:

Housig: LCP UL 94V-0

Color: Black

Contact: Phosphor bronze

Peg: Brass

2.FINISH:

Contact: 3u" Gold/Tin platig on contact area

100u" min.Tin-Lead Plating on soldertails

50u" min.Nickel underplating over all

PEG: 100u"min.Tin-Lead plating on soldertails

50u"min.Nickel underplating over all

UNLESS OTHEWIXE SPECIFIED TOLERANCE ANG ±5° 0 ±0.3 0.0 ±0.2 0.00 ±0.05		KLS Electronic co.,LTD
SCALE	UNIT: mm	
DRAWN LI BEI LIN	06/09/08	DRAWM NAME Pin header 2.0mm
CHECKED		
APPROVED	/ /	PROUCT NO.
	SIZE A4 REV A	PILE NAME:

SATA 7+15 90° H4.2 板下 带三杠

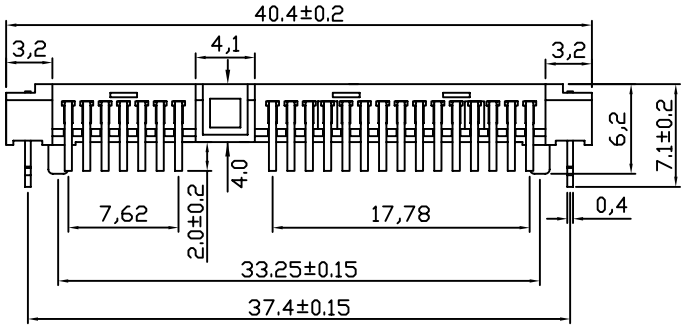

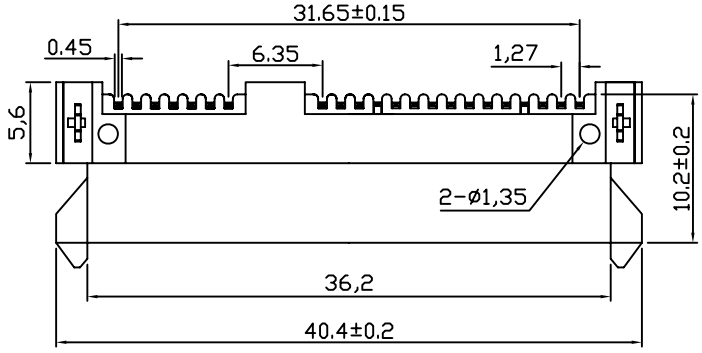

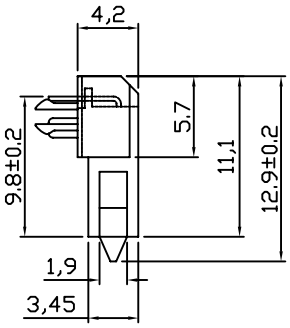

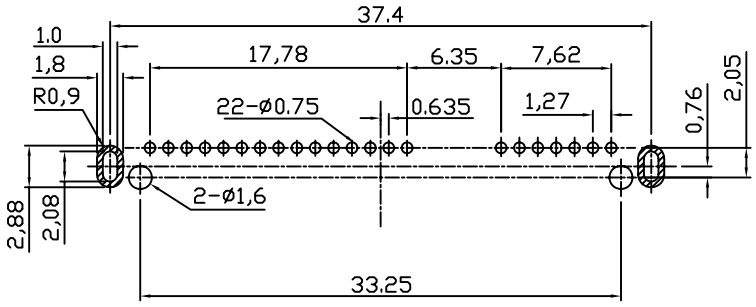

RECOMMEND PCB LAYOUT(T=1.2)

PCB TOLERANCE: ±0.05

SPECIFICATIONS

1.MATERIAL:
- Housig: LCP UL 94V-0
- Color: Black
- Contact: Phosphor bronze
- Peg: Brass

2.FINISH:
- Contact: 3u" Gold/Tin platig on contact area
- 100u" min.Tin-Lead Plating on soldertails
- 50u" min.Nickel underplating over all
- PEG: 100u"min.Tin-Lead plating on soldertails
- 50u"min.Nickel underplating over all

SATA 7+15 90° H4.2 板上

UNLESS OTHEWIXE SPECIFIED TOLERANCE ANG ±5° 0 ±0.3 0.0 ±0.2 0.00 ±0.05		KLS Electronic co.,LTD
SCALE	UNIT: mm	
DRAWN LI BEI LIN	06/09/08	DRAWM NAME Pin header 2.0mm
CHECKED		
APPROVED	/ /	PROUCT NO.
	SIZE A4 REV A	PILE NAME:

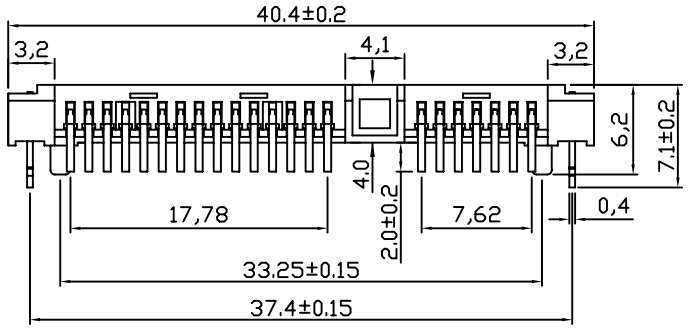

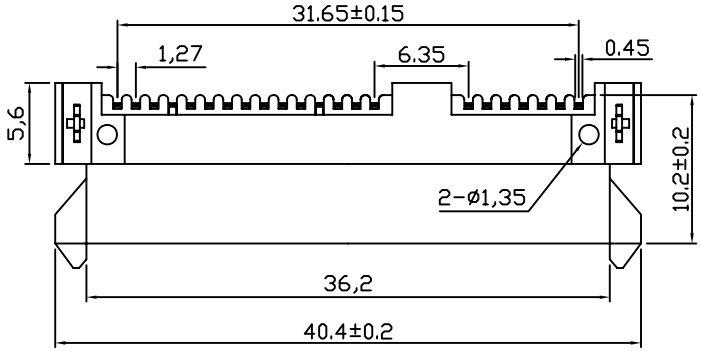

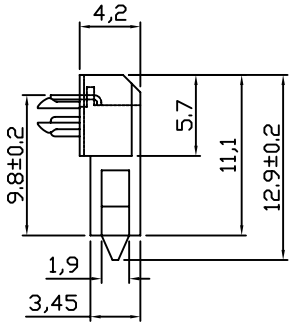

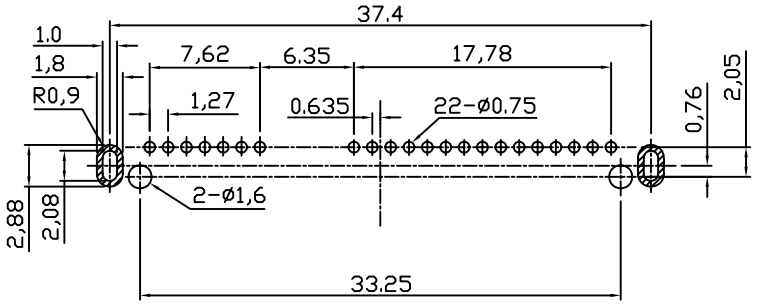

RECOMMEND PCB LAYOUT(T=1.2)

PCB TOLERANCE: ±0.05

SPECIFICATIONS

1.MATERIAL:

Housig: LCP UL 94V-0
Color: Black
Contact: Phosphor bronze
Peg: Brass

2.FINISH:

Contact: 3u" Gold/Tin platig on contact area
100u" min.Tin-Lead Plating on soldertails
50u" min.Nickel underplating over all
PEG: 100u"min.Tin-Lead plating on soldertails
50u"min.Nickel underplating over all

UNLESS OTHEWIXE SPECIFIED TOLERANCE ANG ±5° 0 ±0.3 0.0 ±0.2 0.00 ±0.05		KLS Electronic co.,LTD
SCALE	UNIT: mm	
DRAWN LI BEI LIN	06/09/08	DRAWM NAME Pin header 2.0mm
CHECKED		
APPROVED	/ /	PROUCT NO.
	SIZE A4 REV A	PILE NAME:

SATA 7+15 90° H4.2 板下

SPECIFICATIONS

1.MATERIAL:
- Housig: LCP UL 94V-0
- Color: Black
- Contact: Phosphor bronze
- Peg: Brass

2.FINISH:
- Contact: 3u" Gold/Tin platig on contact area
  100u" min.Tin-Lead Plating on soldertails
  50u" min.Nickel underplating over all
- PEG: 100u"min.Tin-Lead plating on soldertails
  50u"min.Nickel underplating over all

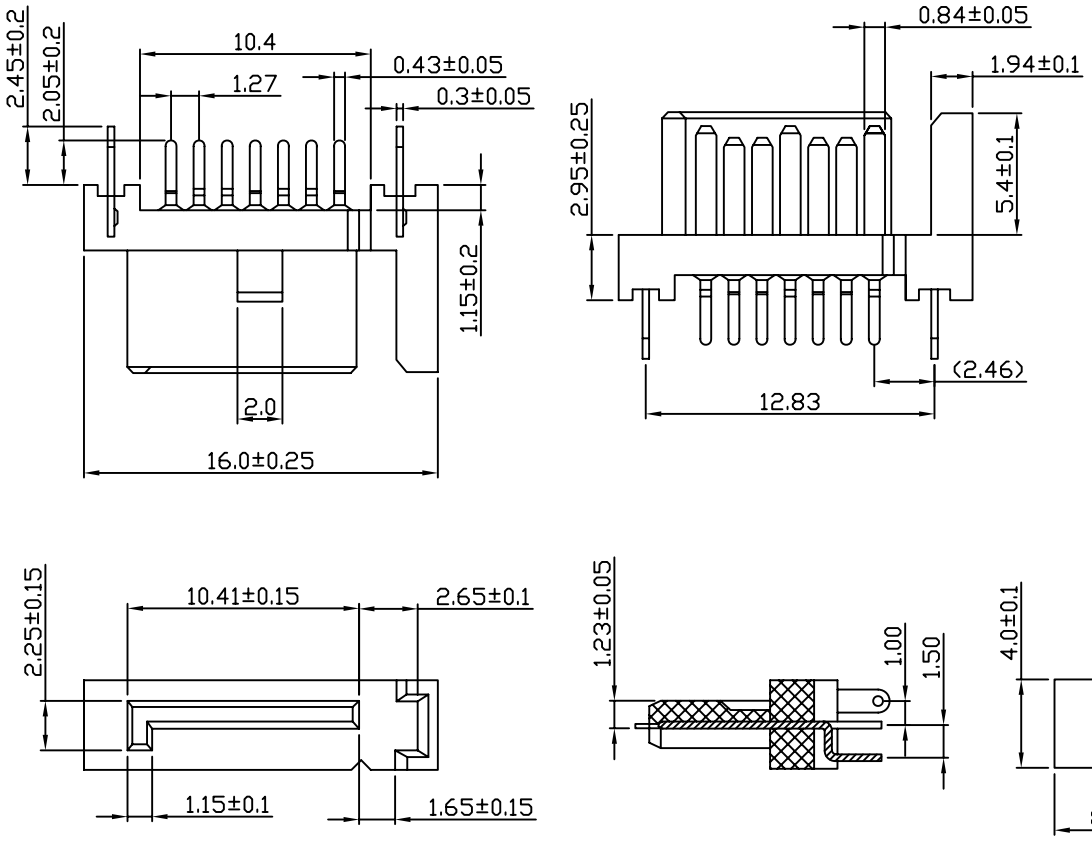

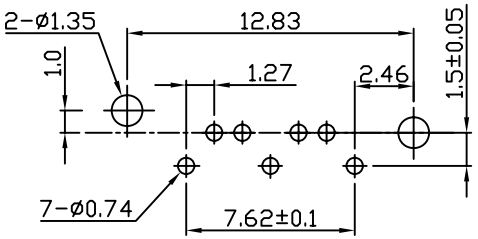

Recommend PC Board Layout

UNLESS OTHEWIXE SPECIFIED TOLERANCE: ANG ±5°, 0 ±0.3, .0 ±0.2, .00 ±0.05		KLS Electronic co.,LTD
SCALE	UNIT: mm	
DRAWN 李北林	17/06/08	DRAWM NAME: SATA 7P B TYPE
CHECKED		
APPROVED	/ /	PROUCT NO.
	SIZE A4 REV A	PILE NAME:

SATA 7P B TYPE 单柱插板式

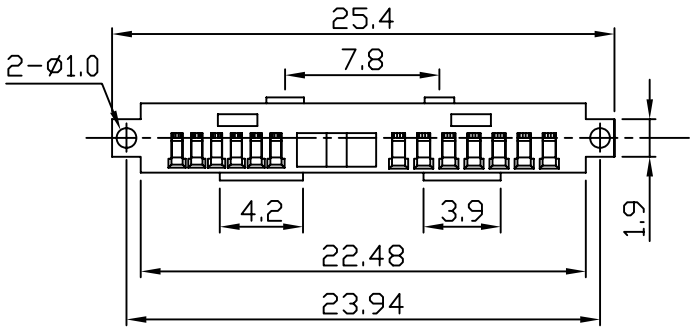

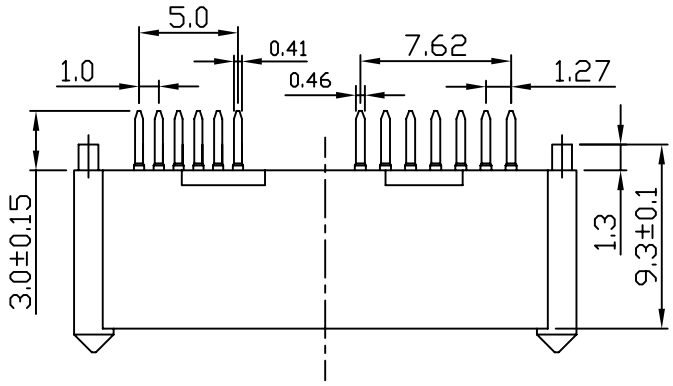

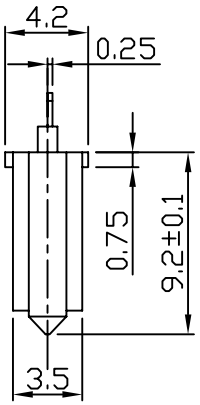

SPECIFICATIONS

1.MATERIAL:
- Housig: LCP UL 94V-0
- Color: Black
- Contact: Phosphor bronze
- Peg: Brass

2.FINISH:

Contact: 3u" Gold/Tin platig on contact area

100u" min.Tin-Lead Plating on soldertails

50u" min.Nickel underplating over all

PEG: 100u"min.Tin-Lead plating on soldertails

50u"min.Nickel underplating over all

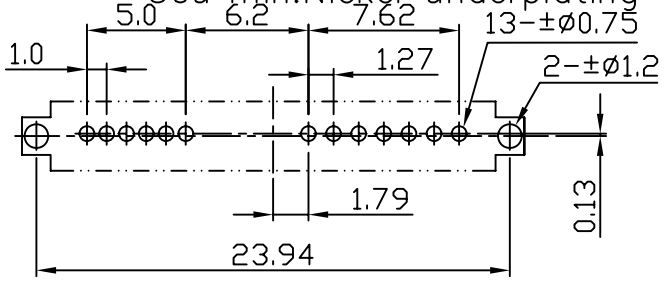

PCB LAYOUT

UNLESS OTHEWIXE SPECIFIED TOLERANCE ANG ±5° 0 ±0.3 0.0 ±0.2 0.00 ±0.05		KLS Electronic co.,LTD
SCALE	UNIT: mm	
DRAWN LI BEI LIN	06/01/09	DRAWM NAME SATA 6+7P 180°
CHECKED		
APPROVED	/ /	PROUCT NO.
	SIZE A4 REV A	PILE NAME:

SATA 6+7p 180°

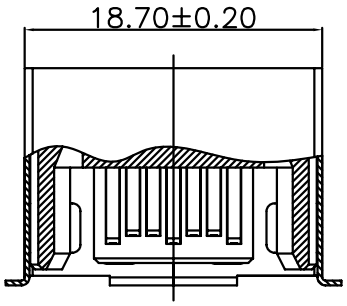

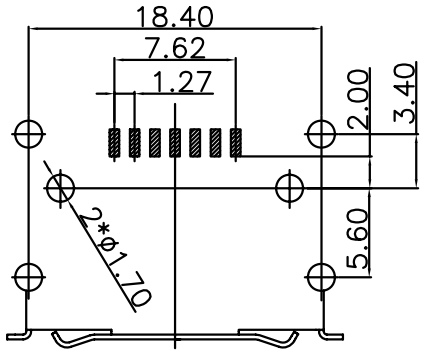

P.C.B layout

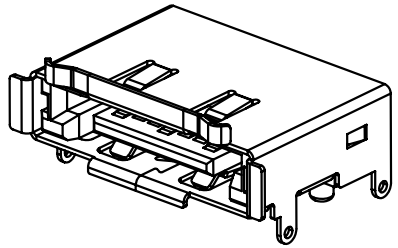

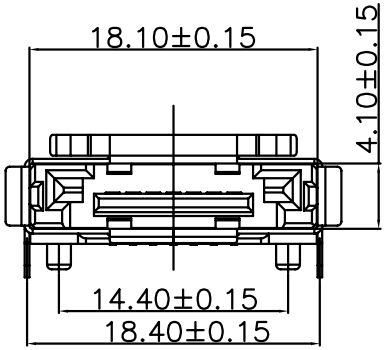

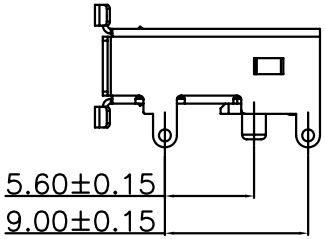

SPECIFICATION:
MATERIAL:
HOUSING:PA6T 30% GF UL 94V-0
COLOR:BLACK
CONTACT:Bronze C5191-H,T=0.25mm
SHELL:BRASS C2680R-H,T=0.30mm
FINISH
CONTACT:3u"GOLD/TIN PLATING ON CONTACT AREA
100u"MIN.TIN-LEAD PLATING ON SOLDERTAILS
50u"MIN.NICKEL UNDERPLATING OVERALL
PEG:100u"MIN.TIN-LEAD PLATING ON SOLDERTAILS
50u"MIN.NICKEL UNDERPLATING OVERALL

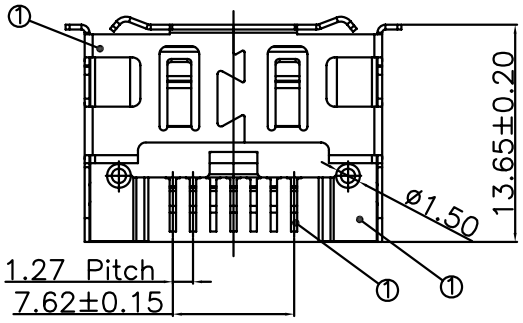

UNLESS OTHEWIXE SPECIFIED TOLERANCE ANG ±5° 0 ±0.3 .0 ±0.15 .00 ±0.05	KLS Electronic co.,LTD
SCALE	UNIT mm
DRAWN Li Bei Lin	06/06/08
CHECKED	
APPROVED	/ /
SIZE A4 REV A	

DRAWM NAME

PROUCT NO.

PILE NAME:

E_SATA 7P - 正向 SMT （板上）

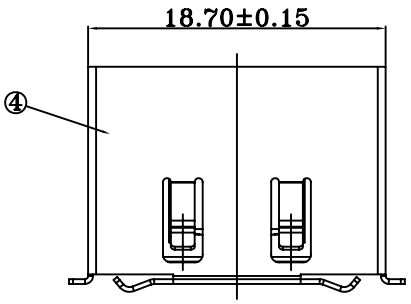

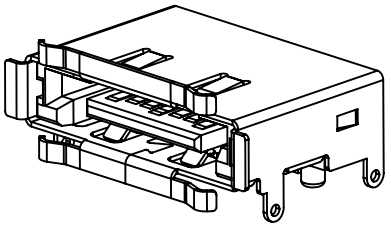

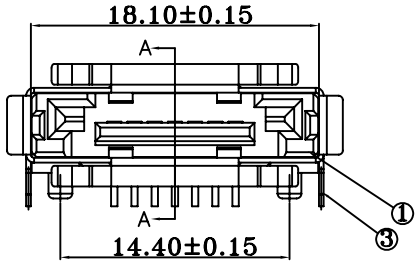

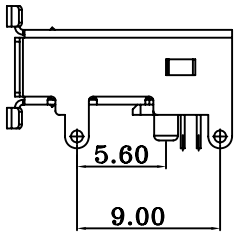

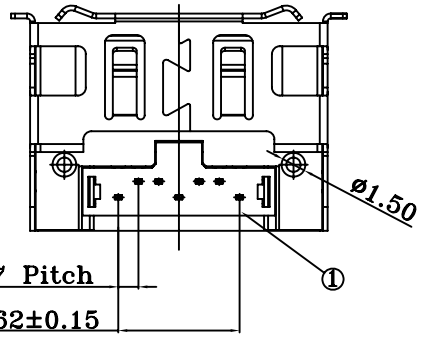

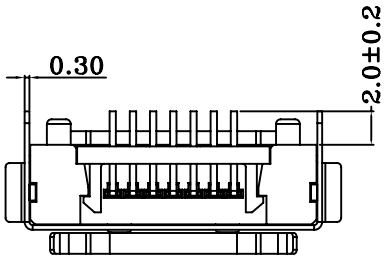

SPECIFICATION:
MATERIAL:
HOUSING:PA6T 30% GF UL 94V-0
COLOR:BLACK
CONTACT:Bronze C5191-H,T=0.25mm
SHELL:BRASS C2680R-H,T=0.30mm
FINISH
CONTACT:3u"GOLD/TIN PLATING ON CONTACT AREA
100u"MIN.TIN-LEAD PLATING ON SOLDERTAILS
50u"MIN.NICKEL UNDERPLATING OVERALL
PEG:100u"MIN.TIN-LEAD PLATING ON SOLDERTAILS
50u"MIN.NICKEL UNDERPLATING OVERALL

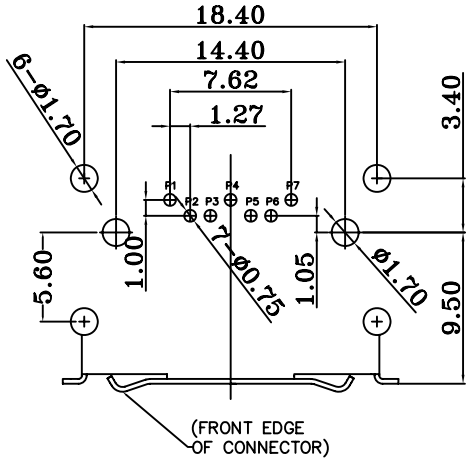

RECOMMENDED PC BOARD LAYOUT
(TOP VIEW)

UNLESS OTHEWIXE SPECIFIED TOLERANCE ANG ±5° 0 ±0.3 0.0 ±0.15 0.00 ±0.05		KLS Electronic co.,LTD
SCALE	UNIT mm	
DRAWN LI BEI LIN	06/06/08	DRAWM NAME E_SATA 7P - C (DIP Type)
CHECKED		
APPROVED	/ /	PROUCT NO.
	SIZE A4 REV A	PILE NAME:

E_SATA 7P - C (DIP Type) 板上

REV	DESCRIPTION	APPRO.	CHANGE	DATE
0	原始尺寸			

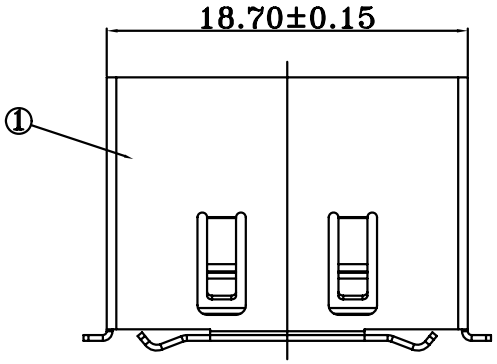

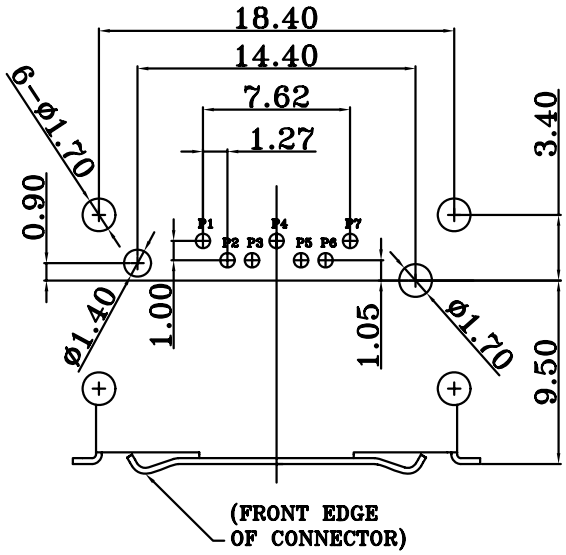

RECOMMENDED PC BOARD LAYOUT

SPECIFICATION:
MATERIAL:
HOUSING:PA6T 30% GF UL 94V-0
COLOR:BLACK
CONTACT:Bronze C5191-H,T=0.25mm
SHELL:BRASS C2680R-H,T=0.30mm
FINISH
CONTACT:3u"GOLD/TIN PLATING ON CONTACT AREA
100u"MIN.TIN-LEAD PLATING ON SOLDERTAILS
50u"MIN.NICKEL UNDERPLATING OVERALL
PEG:100u"MIN.TIN-LEAD PLATING ON SOLDERTAILS
50u"MIN.NICKEL UNDERPLATING OVERALL

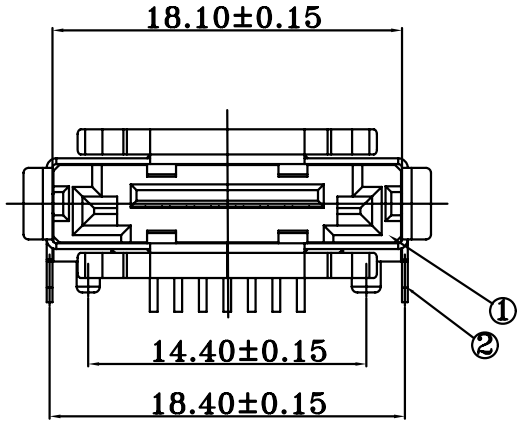

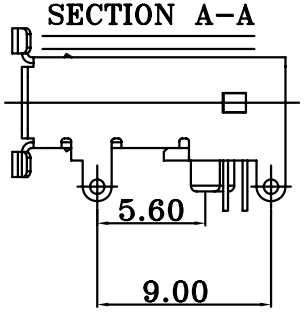

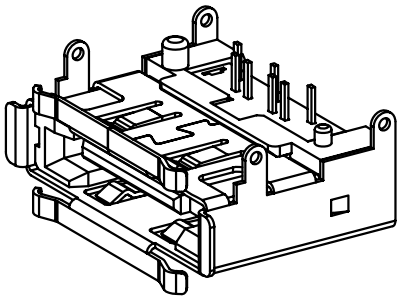

QUALITY SYMBOLS	GENERAL TOLERANCES (UNLESS SPECIFIED)			
		MM		INCH
▼ ⁿ0	0~5	±0.15	0~5	± ----
	5~10	±0.20	5~10	± ----
	10~20	±0.25	10~20	± ----
	20~	±0.30	20~	± ----
▽ C ⁿ0	ANGULAR ±1°			

SIGNATORY		DATE
DRAW		
DESIGN		
CHECK		
APPRO.		

KLS Electronic co.,LTD

CUSTOMER COPY	TITLE: E_SATA 7P - D (DIP Type)	
PART NO.		
DWG NO.	061204-R	
(OLD)PART NO.	———	
SCALE 1:1	A4	UNIT:mm SHEET: 1of 1

THIS DRAWING CONTAINS INFORMATION THAT IS PROPRIETAPY TO *** INCORPORATED AND SHOULD NOT BE USED WITHOUT WRITTEN PERMISSION

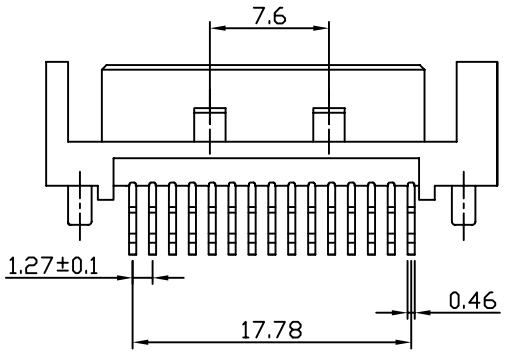

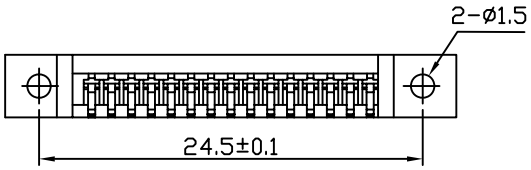

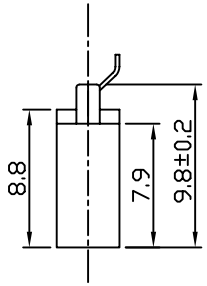

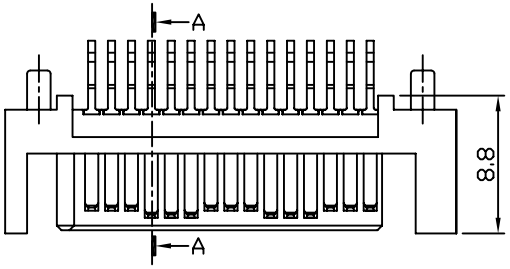

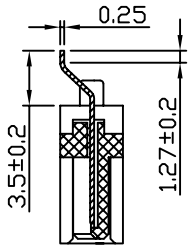

A-A SECTION

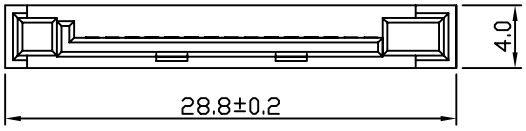

SPECIFICATIONS

1.MATERIAL:
- Housig: LCP UL 94V-0
- Color: Black
- Contact: Phosphor bronze
- Peg: Brass

2.FINISH:
- Contact: 3u" Gold/Tin platig on contact area
  100u" min.Tin-Lead Plating on soldertails
  50u" min.Nickel underplating over all
- PEG: 100u"min.Tin-Lead plating on soldertails
  50u"min.Nickel underplating over all

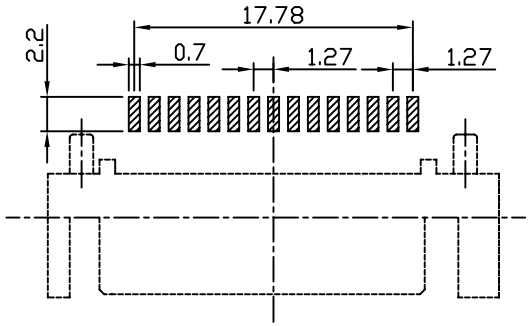

PCB LAYOUT

UNLESS OTHEWIXE SPECIFIED TOLERANCE ANG ±5° 0 ±0.3 .0 ±0.2 .00 ±0.05		KLS Electronic co.,LTD
SCALE	UNIT: mm	
DRAWN LI BEI LIN	30/10/08	DRAWM NAME: SATA 15Pin
CHECKED		
APPROVED	/ /	PROUCT NO.
	SIZE A4 REV A	PILE NAME:

SATA 15P SMT 公座

KLS

1-Connectors & Connector Components-Разъемы, соединители и их узлы

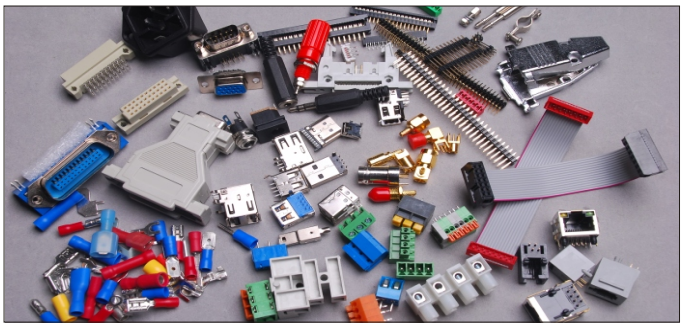

1-1 Wire to Board connectors
1-2 **Board to Board connectors**
1-3 Input/Output (Box to Box)
1-4 Socket & Card connectors
1-5 Power connectors
1-6 Audio & Video connectors
1-7 RF & Coax
1-8 Terminal Blocks & Strips
1-9 Terminals & Splices

More . . .

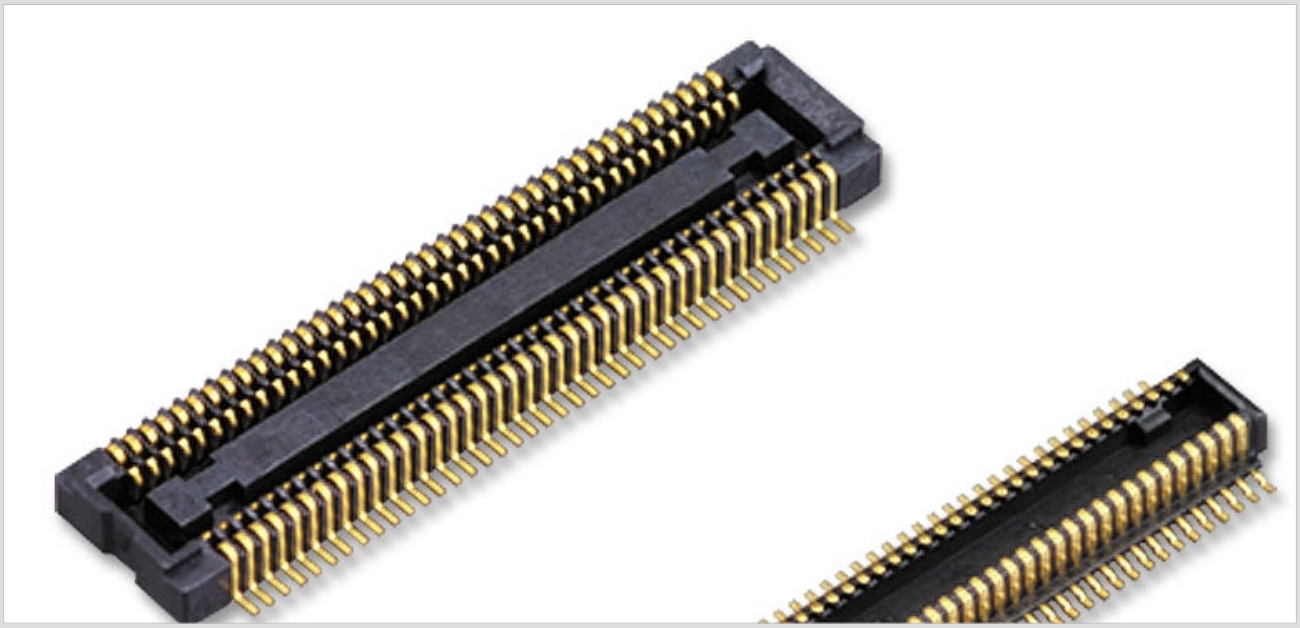

KLS ELECTRONIC CO; LTD. WWW.CNKLS.COM Email:sales@cnkls.com
Tel:0086 574 86824882 Fax:0086 574 86824882

FFC/FPC Connectors

I

P/N:KLS1-FPC-050-02/0.50mm FPC socket pcb SMT 90 zif-lock upper & lower contact

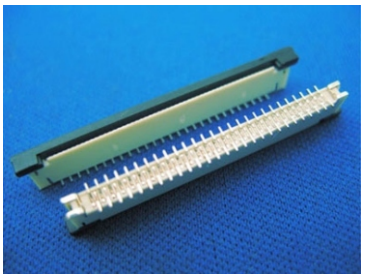

1:Electrical Characteristics:

Voltage:	50v max
Current:	0.5A max
Dielectric with standing voltage:	250 vac
Insulation resistance:	50 Megaohms min.
Contact resistance:	20 Milliohms max

2:Material

Housing:	high-temp. PA4/6
Actuator:	high-temp. PA9T
Contact:	phosphor bronze. Plating: all tin, lead free C5191
Holdown: brass.	Plating: all tin, lead free C2680
Cap:	brass. Plaing: Ni

3:Drawing:

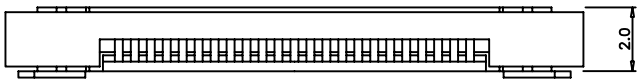

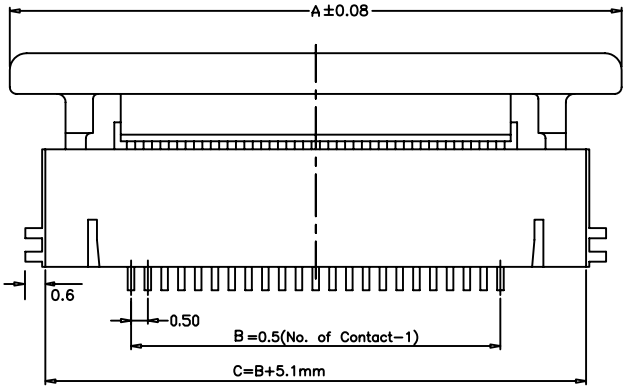

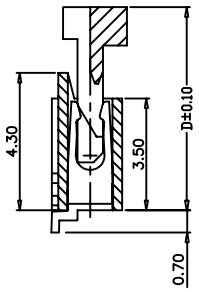

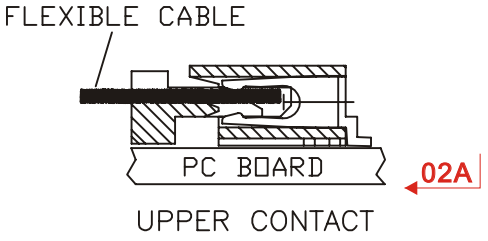

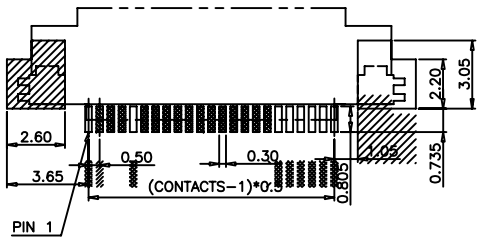

PC BOARD LAYOUT

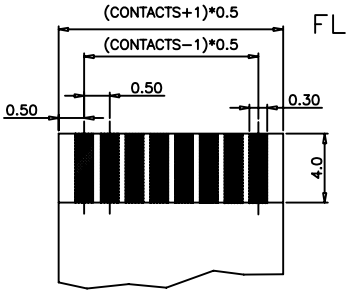

FFC/FPC DIMENSION
THICKNESS $0.3^{+0.03}_{-0.00}$mm

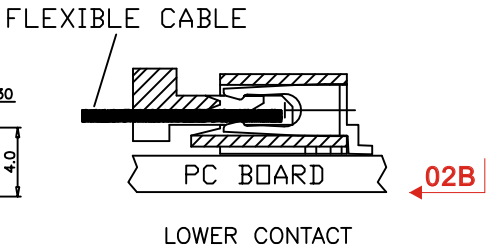

ORDERINFORMATION

Product No: KLS1-FPC050-02A/B-XX

02A: Upper contact
02B: Lower contact

No. Of pins (04~60 pins)

FFC/FPC Connectors

I

P/N:KLS1-FPC-050-03/0.50mm FPC FFC socket pcb SMT 90 hinged lock

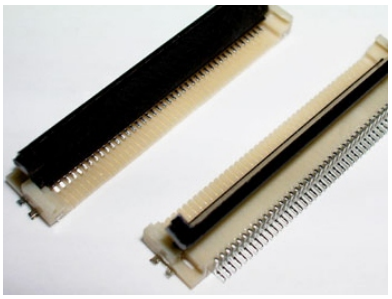

1:Electrical Characteristics:

Voltage:	50v max
Current:	0.5A max
Dielectric with standing voltage:	250 vac
Insulation resistance:	50 Megaohms min.
Contact resistance:	20 Milliohms max

2:Material

Housing:	high-temp. PA4/6
Actuator:	high-temp. PA9T
Contact:	phosphor bronze. Plating: all tin, lead free C5191
Holdown: brass.	Plating: all tin, lead free C2680
Cap:	brass. Plaing: Ni

3:Drawing:

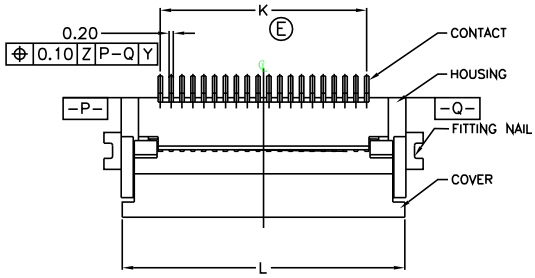

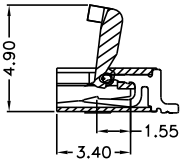

THE MAXIMUM HEIGHT , WHEN THE COVER IS OPEN

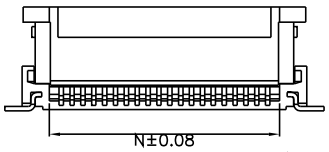

APPLICABLE FPC/FFC ACCEPTED WIDTH

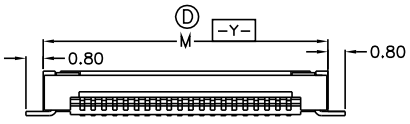

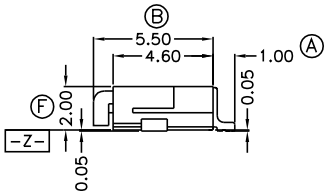

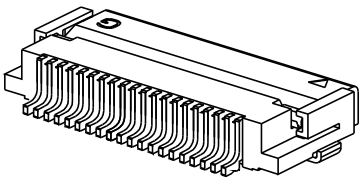

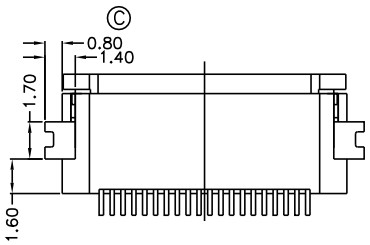

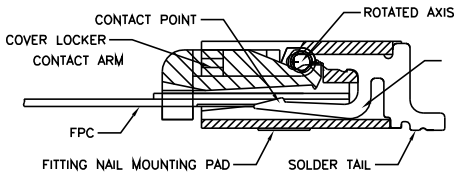

INSERTING DIAGRAM

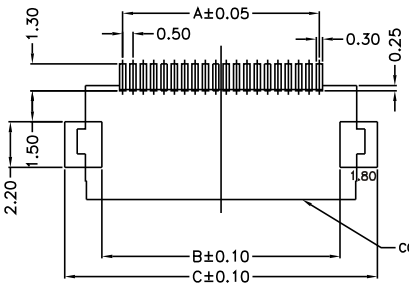

RECOMMENDED PCB LAYOUT
COMPONENT SIDE

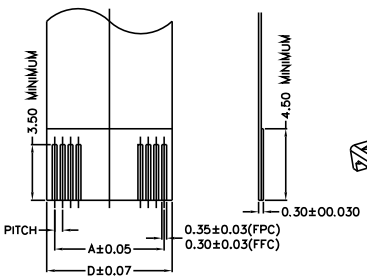

APPLICABLE FPC
RECOMMENDED DIMENSION

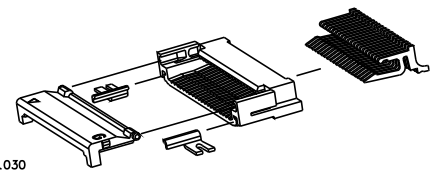

ORDERINFORMATION

Product No: KLS1-FPC050-03-XX

Series No.

No. Of pins (04~60 pins)

KLS electronic
www.cnkls.com

FFC/FPC Connectors

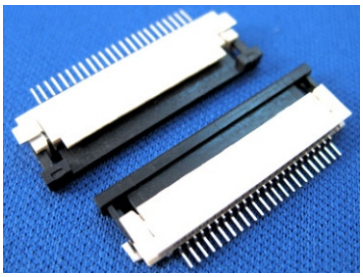

I

P/N:KLS1-FPC-080-02/0.80mm FPC socket pcb SMT 90 zif-lock upper & lower contact

1:Electrical Characteristics:

Voltage:	50v max
Current:	0.5A max
Dielectric with standing voltage:	250 vac
Insulation resistance:	50 Megaohms min.
Contact resistance:	20 Milliohms max

2:Material

Housing:	high-temp. PA4/6
Actuator:	high-temp. PA9T
Contact:	phosphor bronze. Plating: all tin, lead free C5191
Holdown: brass.	Plating: all tin, lead free C2680
Cap:	brass. Plaing: Ni

3:Drawing:

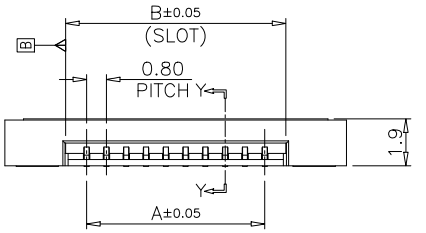

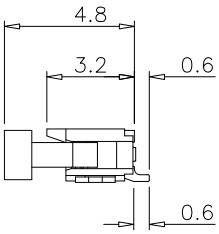

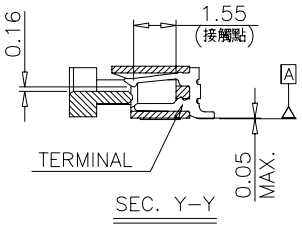

02A

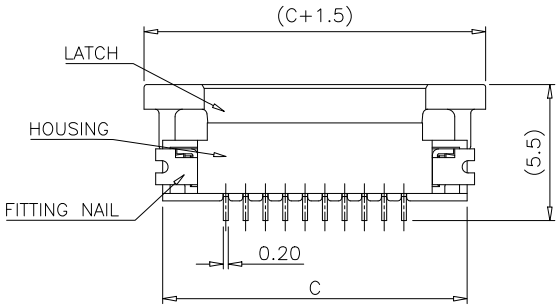

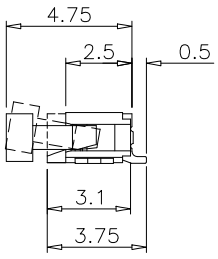

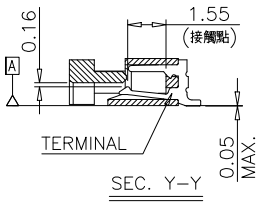

02B

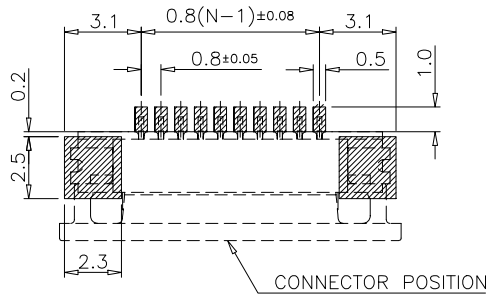

PCB PATTERN LAYOUT

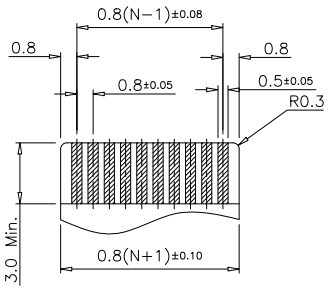

RECOMMENDED APPLICABLE FPC LAYOUT
(THICKNESS:0.3±0.03)

ORDERINFORMATION

Product No: KLS1-FPC080-02A/B-XX

02A:Upper contact
02B:Lower contact

No. Of pins (04~60 pins)

All specification & demension subject to change , please call KLS sales representative for update information.

I

FFC/FPC Connectors

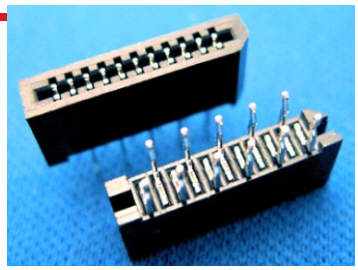

P/N:KLS1-FPC100-01/1.00mm(0.100″) FPC socket Straight & angled & SMT

1:Electrical Characteristics:

Current rating:	0.5 AMP
Dielectric with standing voltage:	500 vac min
Insulation resistance:	1000 Megaohms min
Contact resistance:	30 Milliohms max
temperature range:	-55 to +85

2:Material

Insulator : glass-reinforced thermoplastic,UL94V-0
Contact: copper alloy
Plating: tinned

3:Drawing:

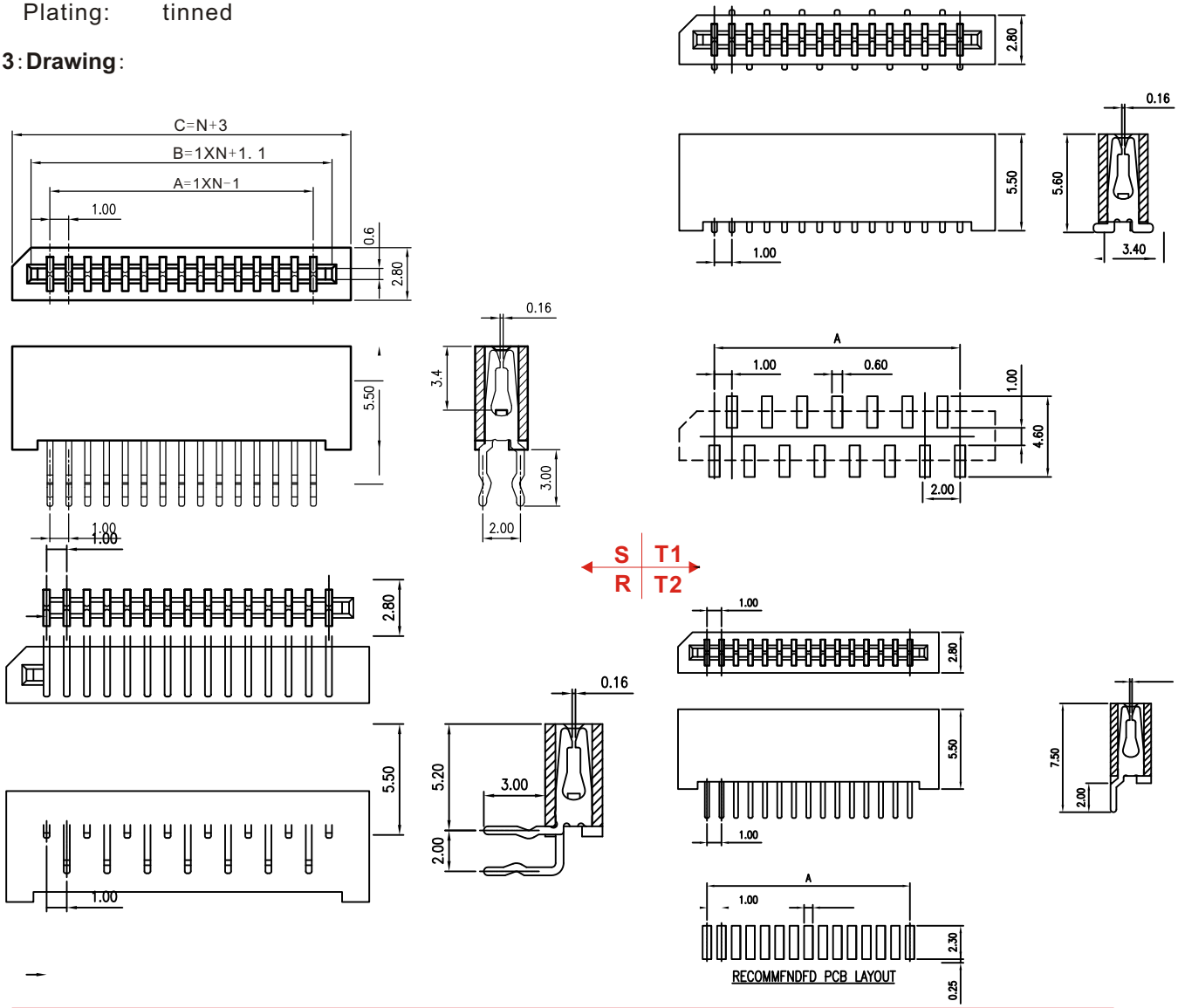

ORDERINFORMATION

Product No: KLS1-FPC100-01-XX-S/R/T1/T2

- XX: No. Of pins (02~36 pins)
- S/R/T1/T2: S:straight; R:Angled; T1:see pic.; T2:see pic.

FFC/FPC connectors

I

P/N:KLS1-FPC100-02A/1.00mm（0. 0394″）FPC FFC socket pcb dip 180 zif-lock

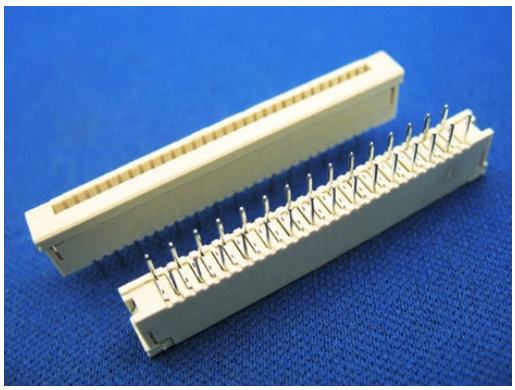

1:Electrical Characterstics

Operating voltage: 100 vac max
Current rating: 0.5 amp max
Contact resistance: 30m ohm. max
Insulation resistance: 500m ohm. min
Dielectric Withstandingf Voltage: 500V AC R.M.S.
Operating Temperature range: -40 to + 85

2:Material :

Insulation: LCP UL94V-0 rated (color: ivory)
Slider : pps UL94V-0 rated (color: black)
Terminal: phosphor bronze
Plating: tin alloy plated

3:Drawing

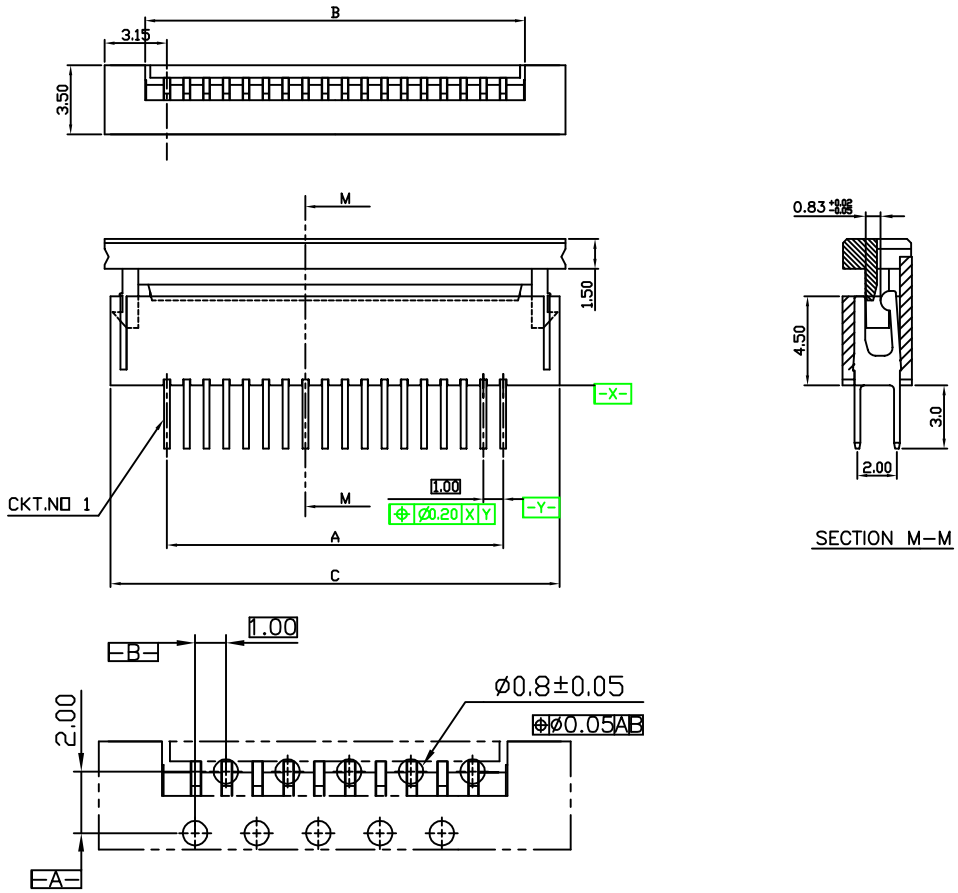

4:Ordering information

P/N:KLS1-FPC100-02A-XX

No of pins（03~30 pins）

■ P/N: KLS1-FPC100-02B/1.00mm FPC FFC socket pcb SMT 180 zif-lock

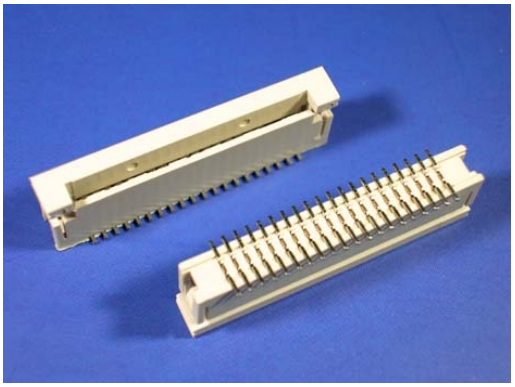

1: Electrical Characterstics

Operating voltage: 100 vac max
Current rating: 0.5 amp max
Contact resistance: 30m ohm. max
Insulation resistance: 500m ohm. min
Dielectric Withstandingf Voltage: 500V AC R.M.S.
Operating Temperature range: -40 to + 85

2: Material :

Insulation: LCP UL94V-0 rated (color: ivory)
Slider : pps UL94V-0 rated (color: black)
Terminal: phosphor bronze
Plating: tin alloy plated

3: Drawing

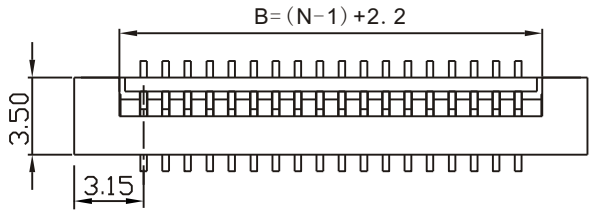

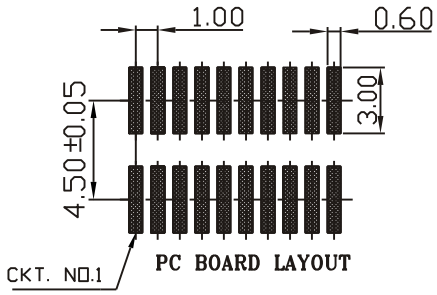

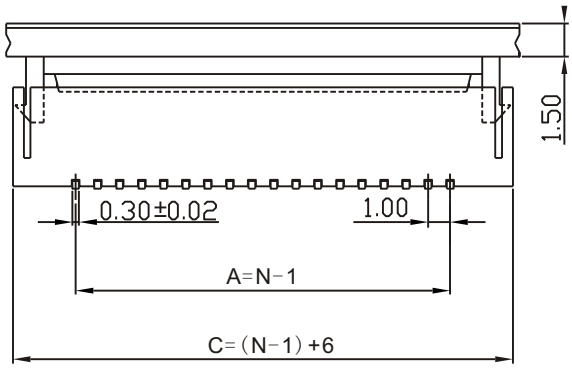

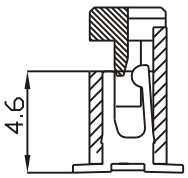

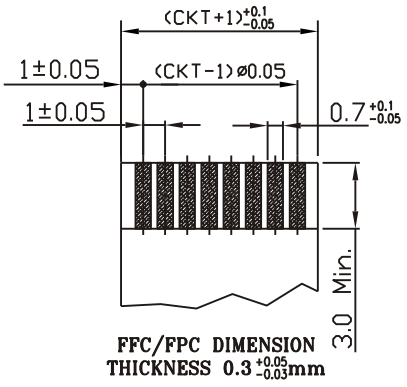

4: Ordering information

P/N: KLS1-FPC100-02B-XX

No of pins (03~30 pins)

FFC/FPC Connectors

I

P/N:KLS1-FPC100-03/1.0mm FPC FFC socket 90 smt zif-lock upper & lower contact

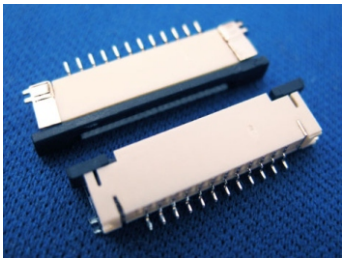

1:Electrical Characteristics:

Current rating:	0.5 AMP
Dielectric with standing voltage:	500 vac min
Insulation resistance:	1000 Megaohms min
Contact resistance:	30 Milliohms max
temperature range:	-55 to +85

2:Material

Insulator : glass-reinforced thermoplastic,UL94V-0
Contact: copper alloy
Plating: tinned

3:Drawing:

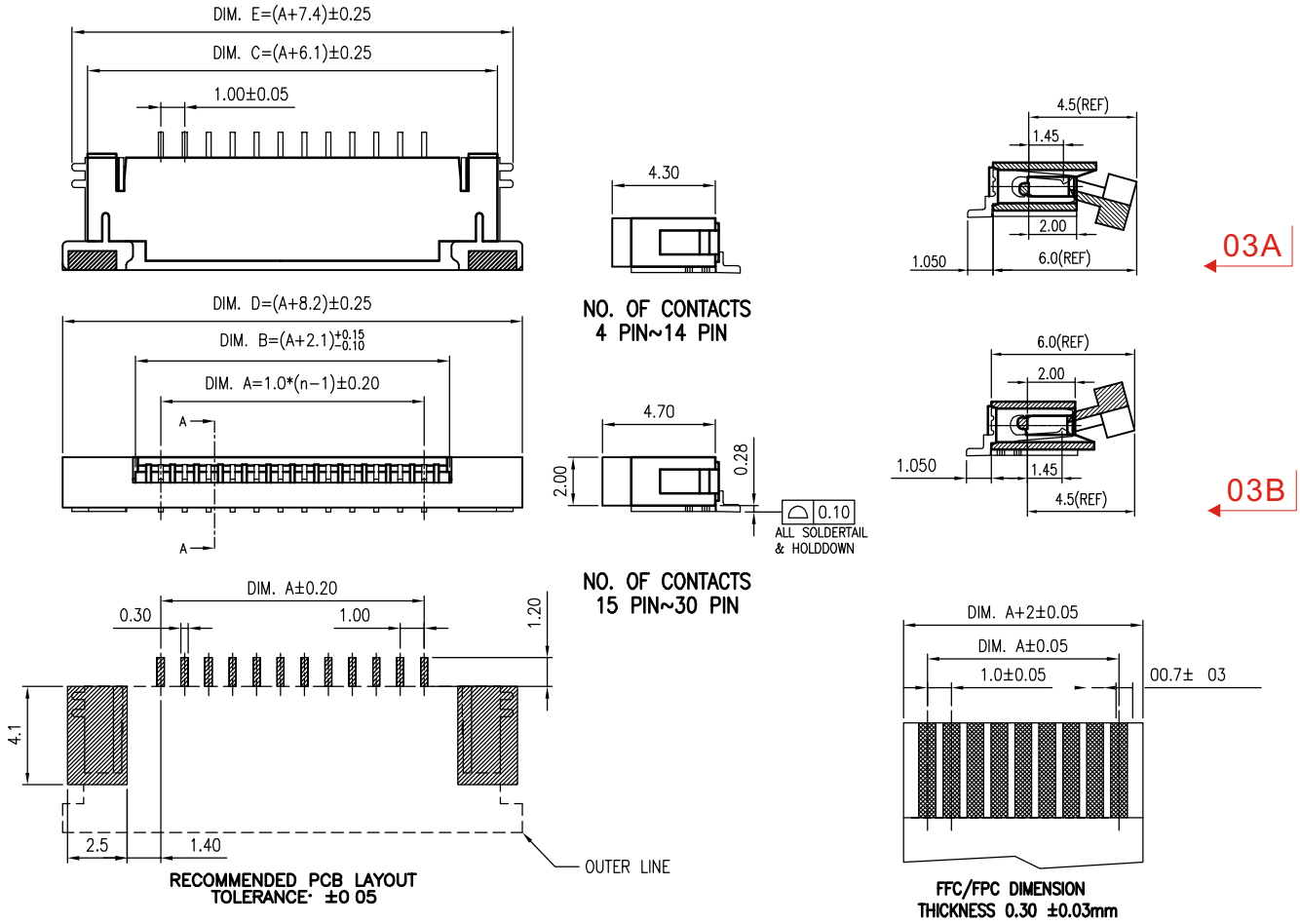

ORDERINFORMATION

Product No: KLS1-FPC100-03A/B-XX

03A:Upper contact
03B:Lower contact

No. Of pins (04~30 pins)

■ P/N: KLS1-FPC125-01A/B/1.25mm (0.049″) FPC FFC socket pcb dip 180 non-zif

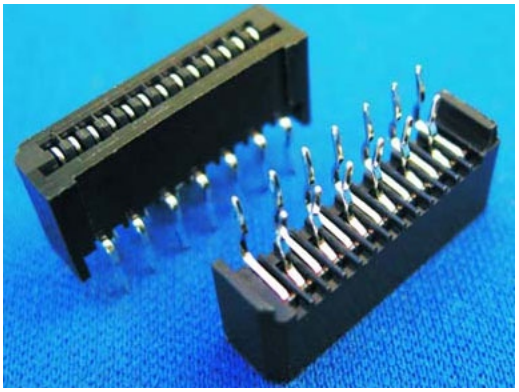

I

1: Electrical Characterstics

Operating voltage: 100 vac max
Current rating: 0.75 amp max
Contact resistance: 30M ohm. max
Insulation resistance: 1000M ohm. min
Dielectric Withstandingf Voltage: 500V AC R.M.S.
Operating Temperature range: -40 to + 105

2: Material :

Insulator Material : Polyester UL94V-0
Contact Material : Phosphor bronze
Contact plating : Au or Sn over 50u″ nl

3: Drawing

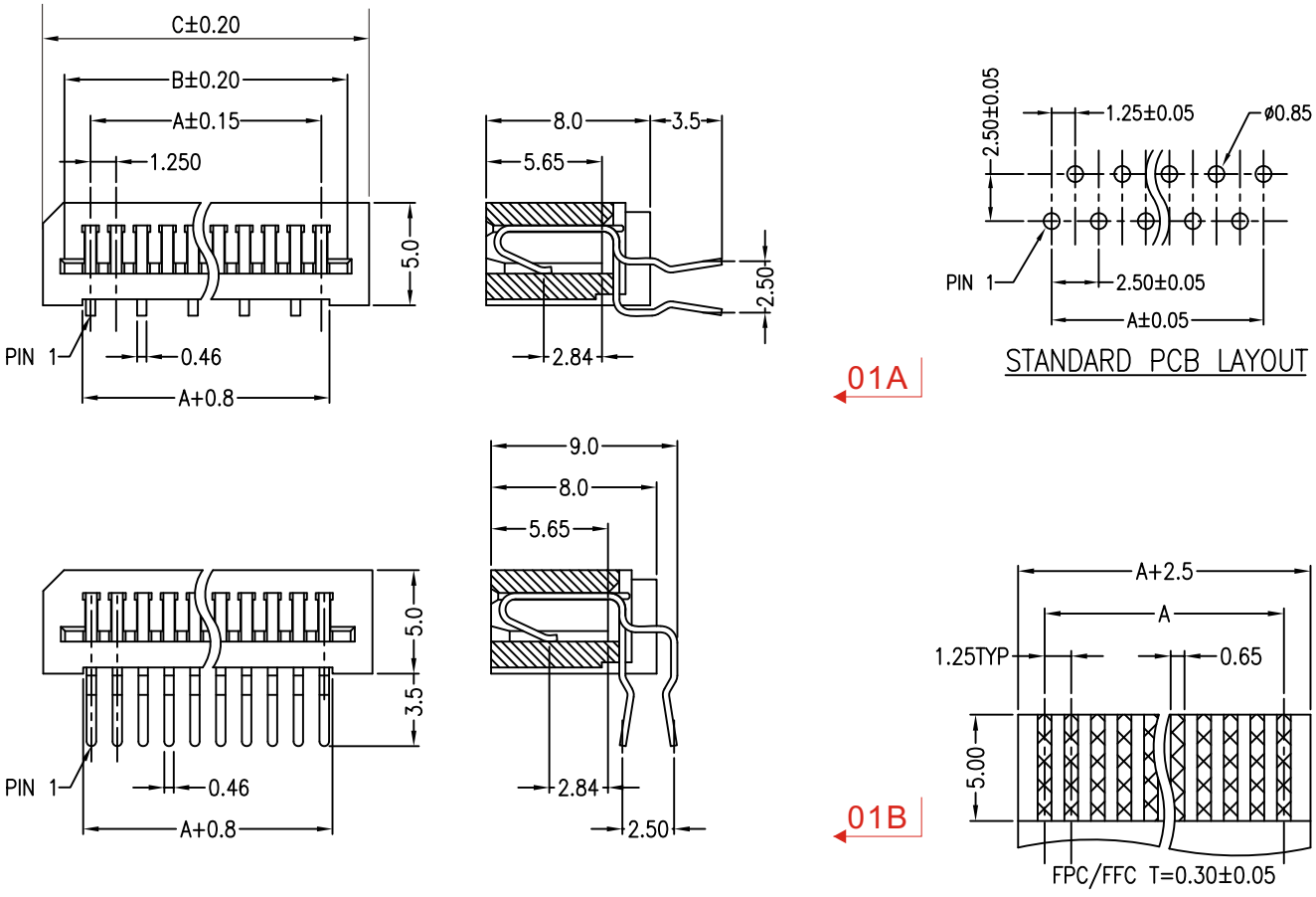

4: Ordering information

P/N: KLS1-FPC125-01A/B-XX

01A: DIP 180
01B: DIP 90

XX: No of pins (03~36 pins)

KLS

1-Connectors & Connector Components-Разъемы, соединители и их узлы

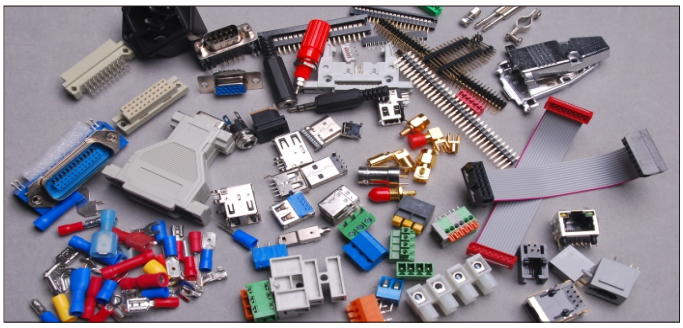

1-1 Wire to Board connectors
1-2 Board to Board connectors
1-3 **Input/Output (Box to Box)**
1-4 Socket & Card connectors
1-5 Power connectors
1-6 Audio & Video connectors
1-7 RF & Coax
1-8 Terminal Blocks & Strips
1-9 Terminals & Splices

More . . .

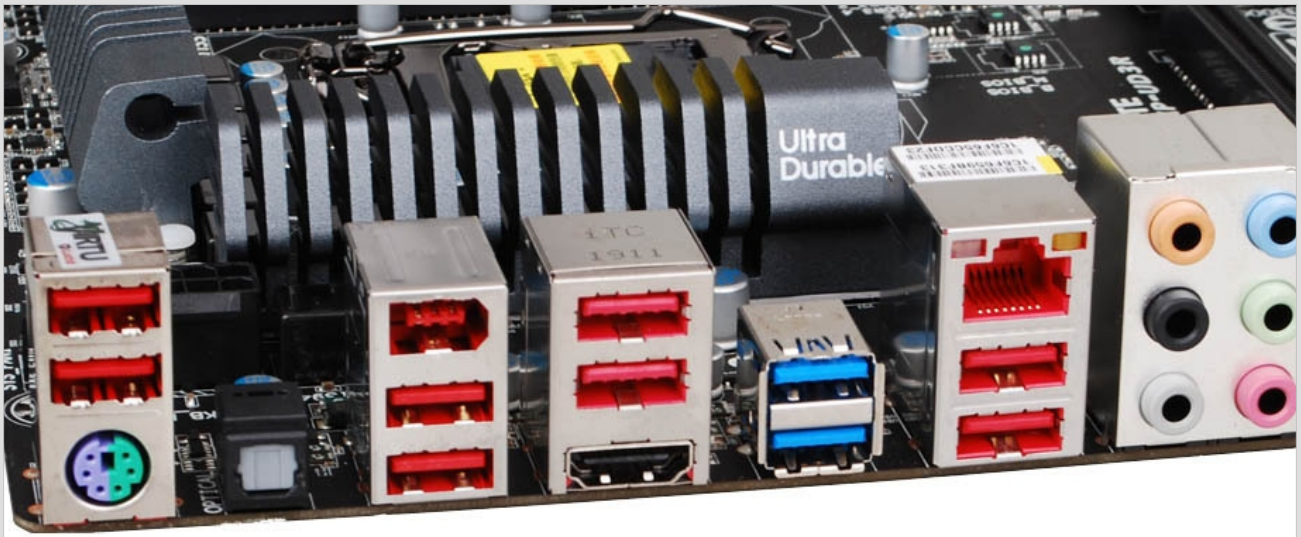

KLS ELECTRONIC CO; LTD. WWW.CNKLS.COM Email:sales@cnkls.com
Tel:0086 574 86824882 Fax:0086 574 86824882

PIN Header Series

KLS1-207C PIN HEADER 1.27mm(0.050") Straight Pin Type

Electrical Characteristics:

Current Rating:1 AMP
Insulator Resistance: 5000MΩmin. at DC 500V
Contact Resistance: 20mΩmax. at DC 100mA
Operating Temperature: -45ºC~+105ºC

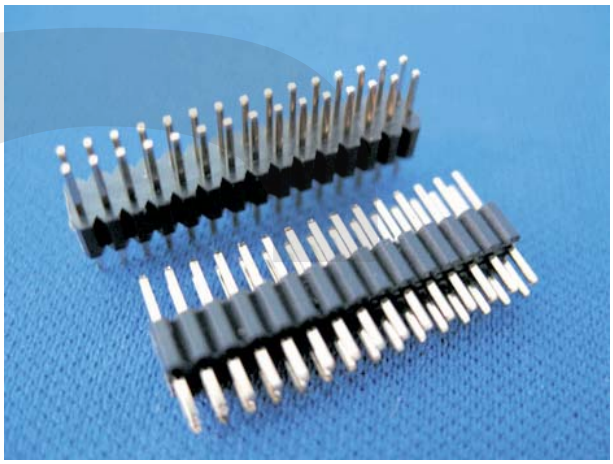

Material:

Housing:30% Glass filled PBT UL94V-0
Contacts: Brass
Plating:Gold plated:0.8u″ over 50u″ nickel
Tin plated:100u " over 50u " nickel

Features:

* Dual insulators offer high versatility.
* Side-to-side and end-to-end stackable.
* Custom design provides excellent products flexibility.

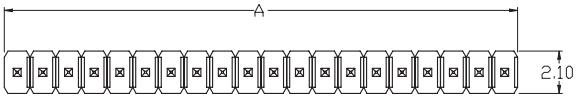

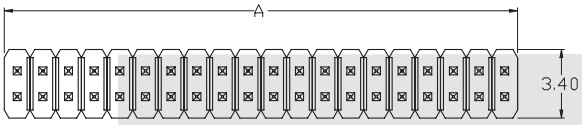

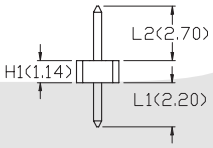

S1 Type

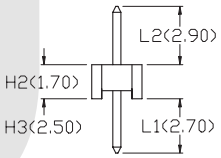

S2 Type

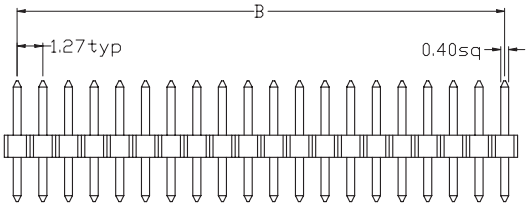

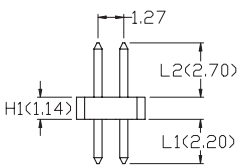

S1 Type

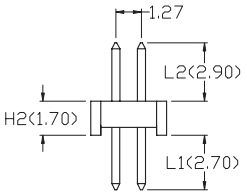

S2 Type

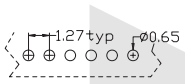

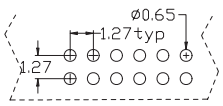

P. C. B Lqyout

Position	1 Thru 40 2 Thru 80
Dimension	
A ± 0.20	1.27 x No. of Position
B ± 0.15	1.27 x No. of Position-1.27

ORDER INFORMATION

Product No.: KLS1-207C-1-XX-S 1

Pos. No.
1.27mm Pin Header Series
1=Single layer 2=Double layer
Total pin number : XX= 1~80pin
Tail Style: S=Straight Pin R=Right Pin T=SMT Pin
Straight Pin Type

I

PIN Header Series

KLS1-207C PIN HEADER 1.27mm(0.050") Single layer Right Pin Type

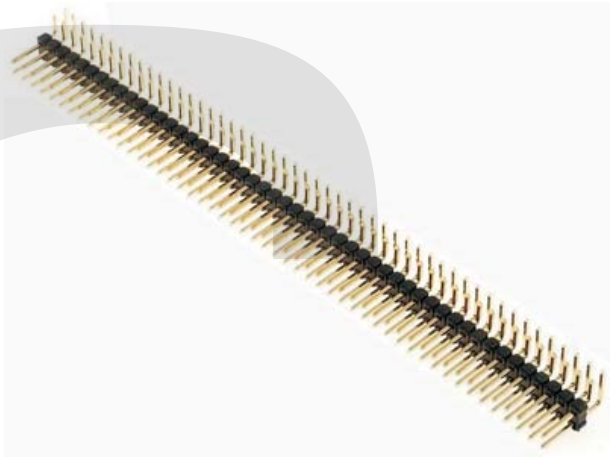

Electrical Characteristics:

Current Rating:1 AMP
Insulator Resistance: 5000MΩmin. at DC 500V
Contact Resistance: 20mΩmax. at DC 100mA
Operating Temperature: -45ºC~+105ºC

Material:

Housing:30% Glass filled PBT UL94V-0
Contacts: Brass
Plating:Gold plated:0.8u″ over 50u″ nickel
Tin plated:100u " over 50u " nickel

Features:

* Dual insulators offer high versatility.
* Side-to-side and end-to-end stackable.
* Custom design provides excellent products flexibility.

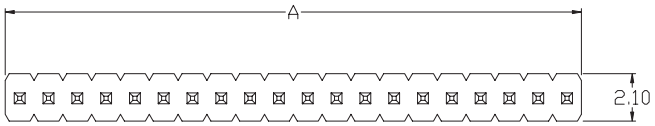

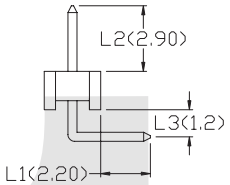

R1 Type

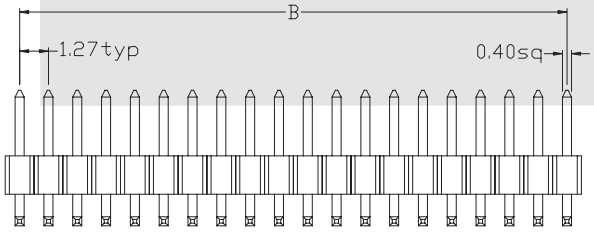

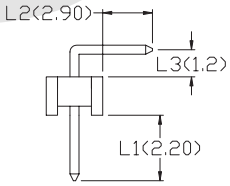

R2 Type

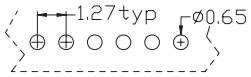

P.C.B Layout

Position	1 Thru 40
Dimension	
A±0.20	1.27 x No. of Position
B±0.15	1.27 x No. of Position-1.27

ORDER INFORMATION

Product No.: KLS1-207C-1-XX-R 1

Pos. No.
1.27mm Pin Header Series
1=Single layer 2=Double layer
Total pin number : XX= 1~40pin
Tail Style: S=Straight Pin R=Right Pin T=SMT Pin
Right Pin type

PIN Header Series

KLS1-207C PIN HEADER 1.27mm(0.050") Double layer Right Pin Type

Electrical Characteristics:

Current Rating:1 AMP
Insulator Resistance: 5000MΩmin. at DC 500V
Contact Resistance: 20mΩmax. at DC 100mA
Operating Temperature: -45ºC~+105ºC

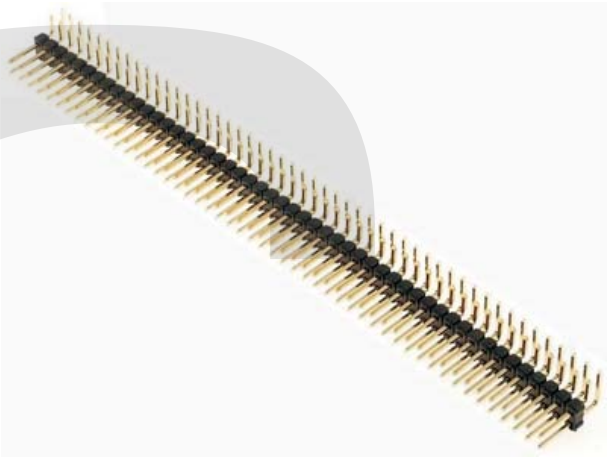

Material:

Housing:30% Glass filled PBT UL94V-0
Contacts: Brass
Plating:Gold plated:0.8u″ over 50u″ nickel
Tin plated:100u " over 50u " nickel

Features:

* Dual insulators offer high versatility.
* Side-to-side and end-to-end stackable.
* Custom design provides excellent products flexibility.

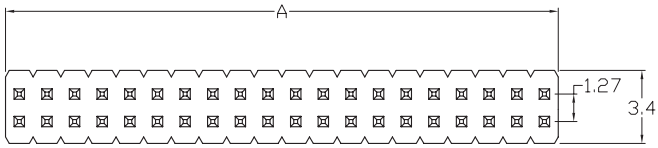

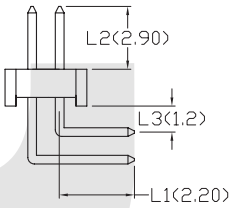

R1 Type

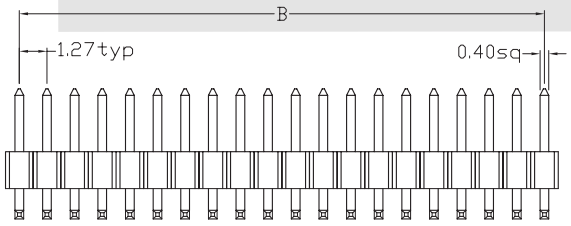

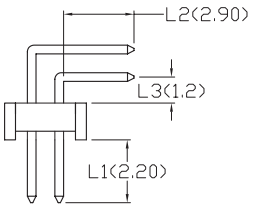

R2 Type

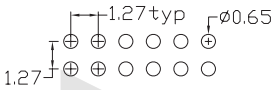

P.C.B Layout

Position	2 Thru 80
Dimension	
A ± 0.20	1.27 x No. of Position
B ± 0.15	1.27 x No. of Position-1.27

ORDER INFORMATION

Product No.: KLS1-207C-2-XX-R 1

- Pos. No.
- 1.27mm Pin Header Series
- 1=Single layer 2=Double layer
- Total pin number : XX= 2~80pin
- Tail Style: S=Straight Pin R=Right Pin T=SMT Pin
- Right Pin type

PIN Header Series

KLS1-207C PIN HEADER 1.27mm(0.050") SMT Type

Electrical Characteristics:

Current Rating:1 AMP
Insulator Resistance: 5000MΩmin. at DC 500V
Contact Resistance: 20mΩmax. at DC 100mA
Operating Temperature: -45ºC~+105ºC

Material:

Housing:30% Glass filled PBT UL94V-0
Contacts: Brass
Plating:Gold plated:0.8u″ over 50u″ nickel
Tin plated:100u " over 50u " nickel

Features:

* Dual insulators offer high versatility.
* Side-to-side and end-to-end stackable.
* Custom design provides excellent products flexibility.

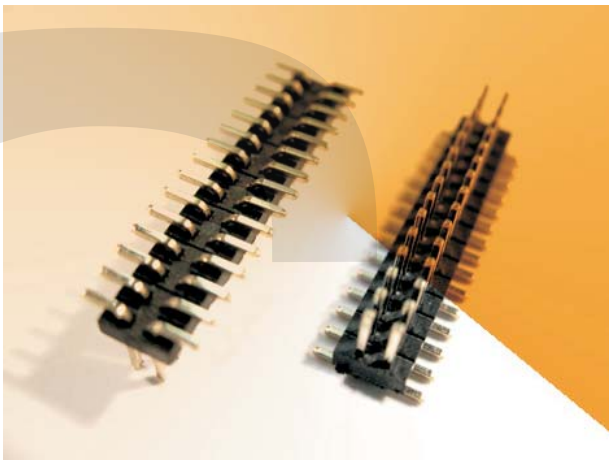

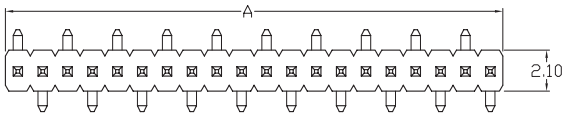

T1 Type

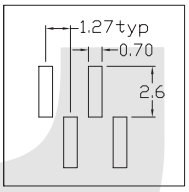

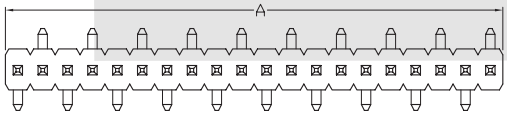

T2 Type

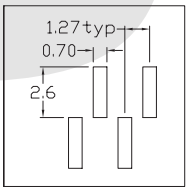

P.C.B Layout

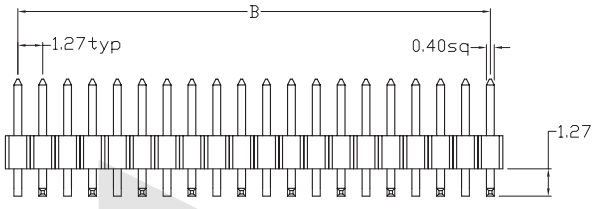

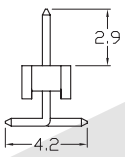

Position	1 Thru 40
Dimension	
A ± 0.20	1.27 x No. of Position
B ± 0.15	1.27 x No. of Position-1.27

ORDER INFORMATION

Product No.: KLS1-207C-1-XX-T 1

- Pos. No.
- 1.27mm Pin Header Series
- 1=Single layer 2=Double layer
- Total pin number : XX= 1~40pin
- Tail Style: S=Straight Pin R=Right Pin T=SMT Pin
- SMT Pin type

PIN Header Series

KLS1-207C PIN HEADER 1.27mm(0.050") SMT Type

Electrical Characteristics:

Current Rating:1 AMP
Insulator Resistance: 5000MΩmin. at DC 500V
Contact Resistance: 20mΩmax. at DC 100mA
Operating Temperature: -45ºC~+105ºC

Material:

Housing:30% Glass filled PBT UL94V-0
Contacts: Brass
Plating:Gold plated:0.8u″ over 50u″ nickel
Tin plated:100u " over 50u " nickel

Features:

* Dual insulators offer high versatility.
* Side-to-side and end-to-end stackable.
* Custom design provides excellent products flexibility.

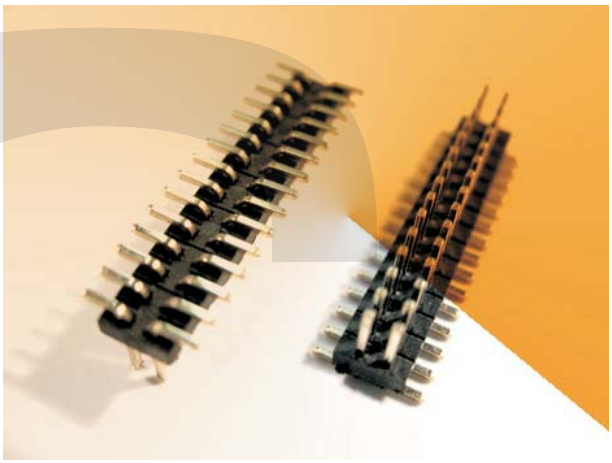

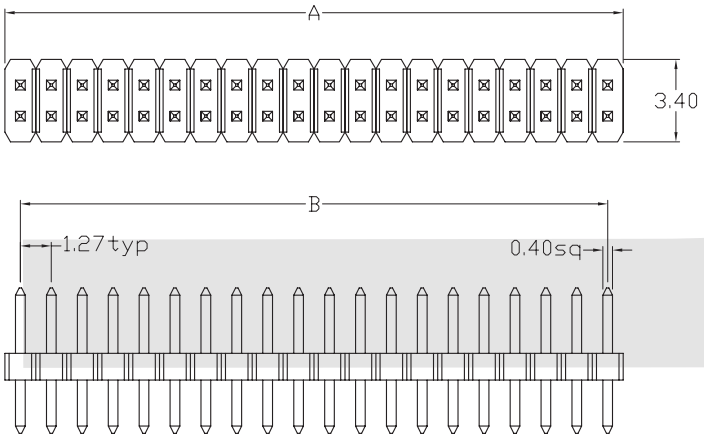

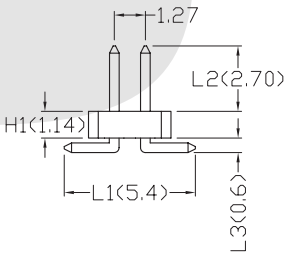

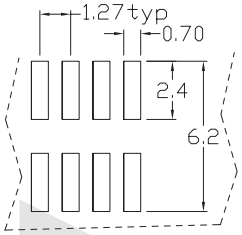

P.C.B Layout

Position	2 Thru 80
Dimension	
A ± 0.20	1.27 x No. of Position
B ± 0.15	1.27 x No. of Position-1.27

ORDER INFORMATION

Product No.: KLS1-207C-2-XX-T

Pos. No.
1.27mm Pin Header Series
1=Single layer 2=Double layer
Total pin number : XX= 2~80pin
Tail Style: S=Straight Pin R=Right Pin T=SMT Pin

PIN Header Series

KLS1-207D PIN HEADER 1.27x2.54mm Straight Pin Type

Electrical Characteristics:

Current Rating:1 AMP
Insulator Resistance: 5000MΩmin. at DC 500V
Contact Resistance: 20mΩmax. at DC 100mA
Operating Temperature: -45ºC~+105ºC

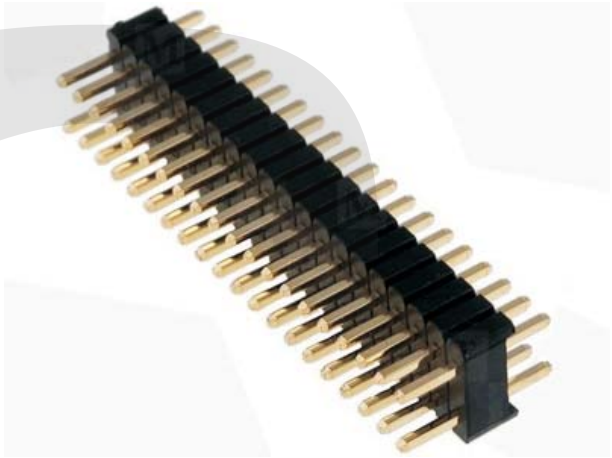

Material:

Housing:30% Glass filled PBT UL94V-0
Contacts: Brass
Plating:Gold plated:0.8u″ over 50u″ nickel
Tin plated:100u " over 50u " nickel

Features:

* Dual insulators offer high versatility.
* Side-to-side and end-to-end stackable.
* Custom design provides excellent products flexibility.

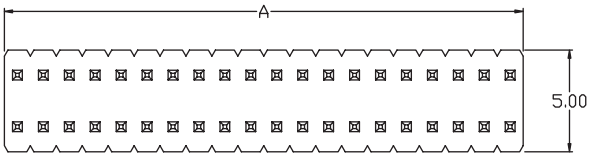

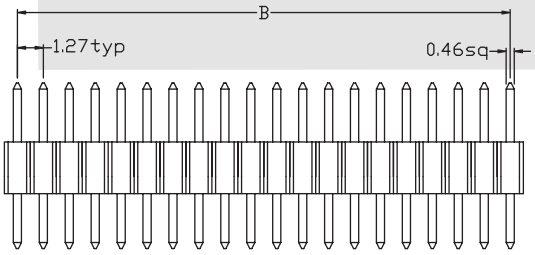

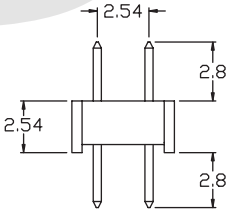

Position	2 Thru 80
Dimension	
A±0.20	1.27 X No.of Positions
B±0.15	1.27 X No.of Positions -1.27

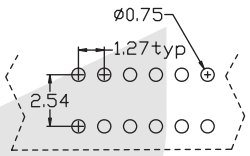

P.C.B Layout

ORDER INFORMATION

Product No.: KLS1-207D - XX-S

Pos. No.
1.27x2.54mm Pin Header Series
Tail Style: S=Straight Pin R=Right Pin T=SMT Pin
Total pin number : XX= 2~80pin

PIN Header Series

KLS1-207D PIN HEADER 1.27x2.54mm Right Pin Type

Electrical Characteristics:

Current Rating:1 AMP
Insulator Resistance: 5000MΩmin. at DC 500V
Contact Resistance: 20mΩmax. at DC 100mA
Operating Temperature: -45ºC~+105ºC

Material:

Housing:30% Glass filled PBT UL94V-0
Contacts: Brass
Plating:Gold plated:0.8u″ over 50u″ nickel
Tin plated:100u " over 50u " nickel

Features:

* Dual insulators offer high versatility.
* Side-to-side and end-to-end stackable.
* Custom design provides excellent products flexibility.



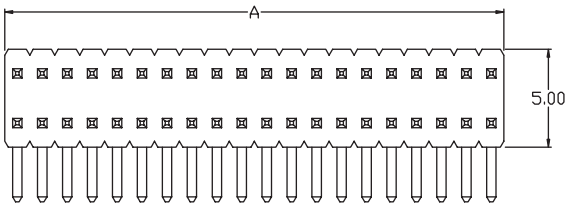

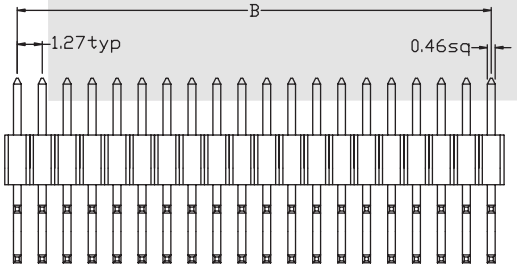

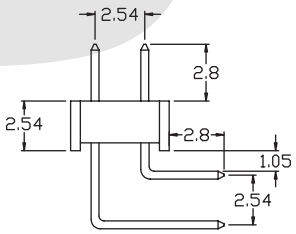

Position	2 Thru 80
Dimension	
A±0.20	1.27 X No.of Positions
B±0.15	1.27 X No.of Positions -1.27

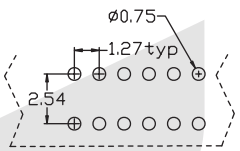

P.C.B Layout

ORDER INFORMATION

Product No.: KLS1-207D - XX-R

Pos. No.
1.27x2.54mm Pin Header Series

Tail Style: S=Straight Pin R=Right Pin T=SMT Pin
Total pin number : XX= 2~80pin

PIN Header Series

KLS1-207D PIN HEADER 1.27x2.54mm SMT Type

Electrical Characteristics:

Current Rating:1 AMP
Insulator Resistance: 5000MΩmin. at DC 500V
Contact Resistance: 20mΩmax. at DC 100mA
Operating Temperature: -45ºC~+105ºC

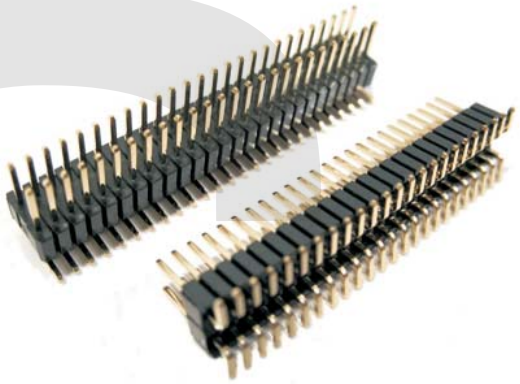

Material:

Housing:30% Glass filled PBT UL94V-0
Contacts: Brass
Plating:Gold plated:0.8u″ over 50u″ nickel
Tin plated:100u " over 50u " nickel

Features:

* Dual insulators offer high versatility.
* Side-to-side and end-to-end stackable.
* Custom design provides excellent products flexibility.

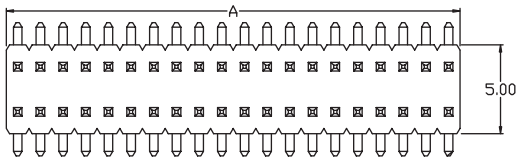

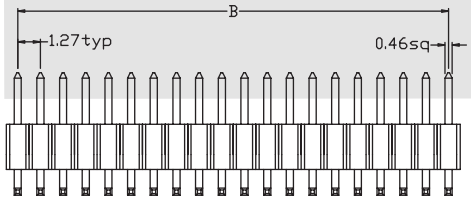

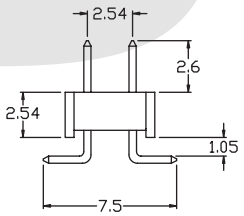

Position	2 Thru 80
Dimension	
A±0.20	1.27 X No.of Positions
B±0.15	1.27 X No.of Positions -1.27

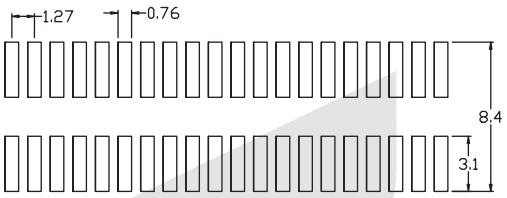

P.C.B Layout

ORDER INFORMATION

Product No.: KLS1-207D - XX-T

Pos. No.
1.27x2.54mm Pin Header Series
Tail Style: S=Straight Pin R=Right Pin T=SMT Pin
Total pin number : XX= 2~80pin

PIN Header Series

KLS1-218C Pin Header1.27mm(0.050 ") Dual insulators high versatility

Electrical Characteristics:

Current Rating:1 AMP
Insulator Resistance: 5000MΩmin. at DC 500V
Contact Resistance: 20mΩmax. at DC 100mA
Operating Temperature: -45ºC~+105ºC

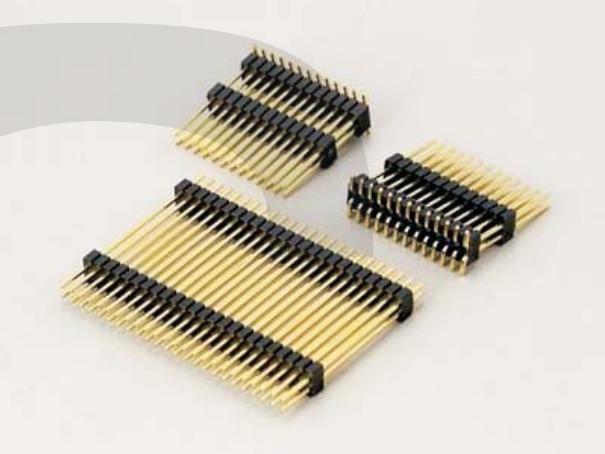

Material:

Housing:30% Glass filled PBT UL94V-0
Contacts: Brass
Plating:Gold plated:0.8u". over 50u" nickel
Tin plated:100u". over 50u" nickel

Features:

* Dual insulators offer high versatility
* Side-to-Side and end-to-end stackable.
* Custom design provides excellent products flexibility.

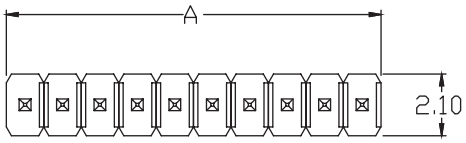

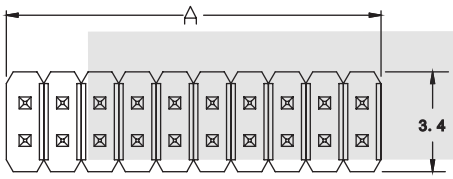

Position	1 Thru 40 2 Thru 80
Dimension	
A±0.20	1.27xN
B±0.15	1.27xN-1.27

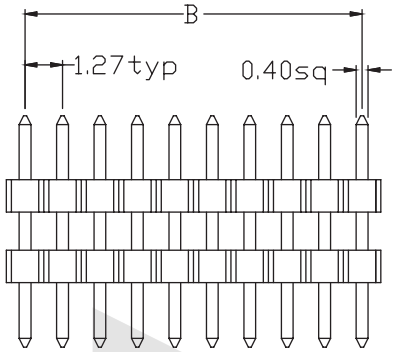

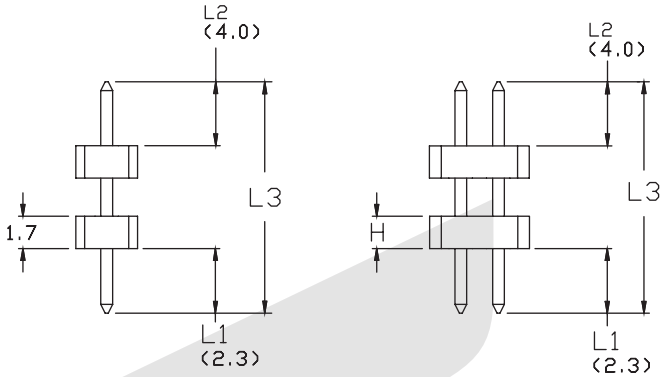

ORDER INFORMATION

Product No.: KLS1-218C-1-XX-S- L1*L2*L3

Pos. No.
Pin Header 1.27mm Dual insulators high versatility Series
1=Single layer 2=Double layer
Total pin number: XX=01-80Pin
Tail Style: S=Straight Pin R=Right Pin T=SMT Pin
L1\L2\L3 Size

PIN Header Series

KLS1-218C Pin Header1.27mm(0.050 ") Dual insulators high versatility

Electrical Characteristics:

Current Rating:1 AMP
Insulator Resistance: 5000MΩmin. at DC 500V
Contact Resistance: 20mΩmax. at DC 100mA
Operating Temperature: -45ºC~+105ºC

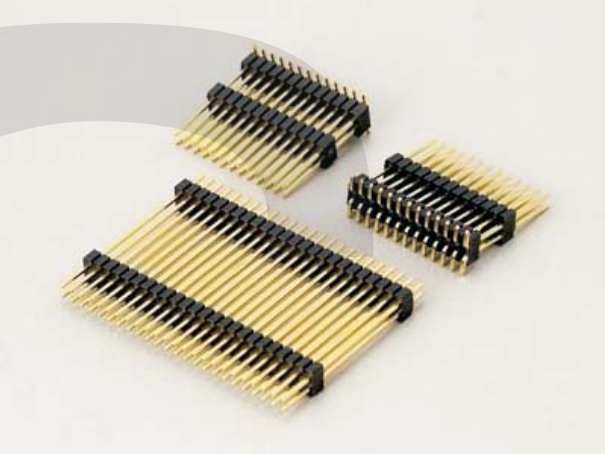

Material:

Housing:30% Glass filled PBT UL94V-0
Contacts: Brass
Plating:Gold plated:0.8u". over 50u" nickel
Tin plated:100u". over 50u" nickel

Features:

* Dual insulators offer high versatility
* Side-to-Side and end-to-end stackable.
* Custom design provides excellent products flexibility.

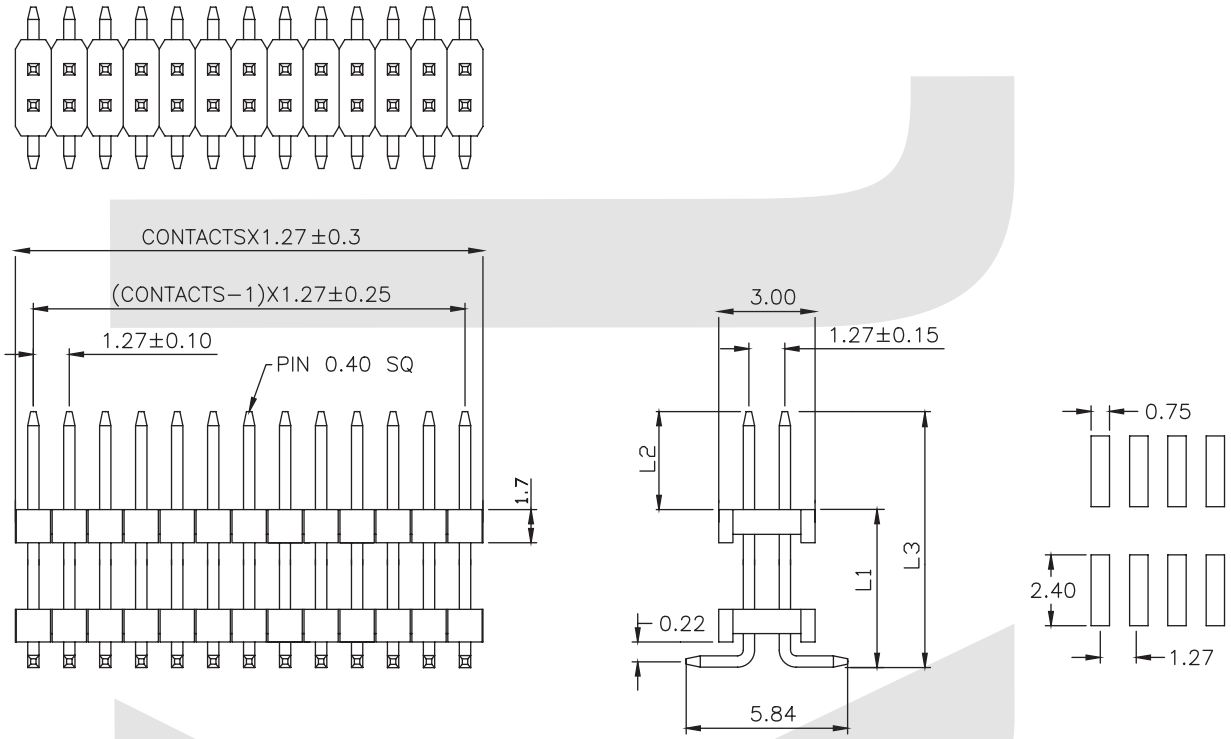

ORDER INFORMATION

Product No.: KLS1-218C-2-XX-T-L1*L2*L3

Pos. No.
Pin Header 1.27mm Dual insulators high versatility Series
1=Single layer 2=Double layer
L1\L2\L3 Size
Tail Style: S=Straight Pin R=Right Pin T=SMT Pin
Total pin number: XX=02-80Pin

PIN Header Series

KLS1-218C Pin Header1.27mm(0.050 ") Dual insulators high versatility

Electrical Characteristics:

Current Rating:1 AMP
Insulator Resistance: 5000MΩmin. at DC 500V
Contact Resistance: 20mΩmax. at DC 100mA
Operating Temperature: -45ºC~+105ºC

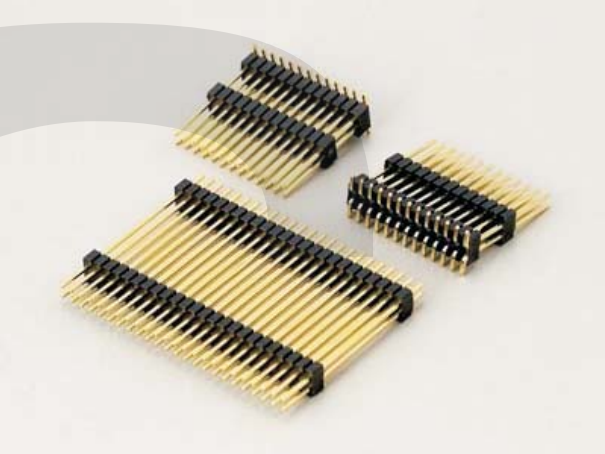

Material:

Housing:30% Glass filled PBT UL94V-0
Contacts: Brass
Plating:Gold plated:0.8u". over 50u" nickel
Tin plated:100u". over 50u" nickel

Features:

* Dual insulators offer high versatility
* Side-to-Side and end-to-end stackable.
* Custom design provides excellent products flexibility.

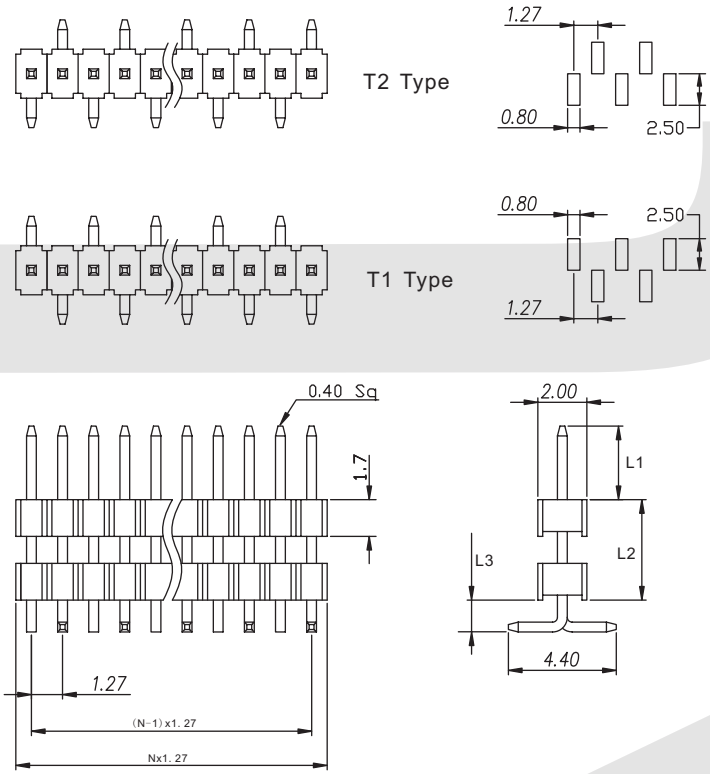

ORDER INFORMATION

Product No.: KLS1-218C-1-XX-T 1 -L1*L2*L3

Pos. No.
Pin Header 1.27mm Dual insulators high versatility Series
1=Single layer 2=Double layer
Total pin number: XX=01-40Pin
L1\L2\L3 Size
SMT Pin Type
Tail Style: S=Straight Pin R=Right Pin T=SMT Pin

Pin Header Series

KLS1-207B Pin Header 2.00mm(0.079") Straight Pin Type

Electrical Characteristics:

Current Rating:1 AMP
Insulator Resistance: 5000MΩmin. at DC 500V
Contact Resistance: 20mΩmax. at DC 100mA
Operating Temperature: -45ºC~+105ºC

Material:

Housing:30% Glass filled PBT UL94V-0
Contacts: Brass
Plating:Gold plated:0.8u" over 50u" nickel
Tin plated:100u" over 50u" nickel

Features:

* Available in straight and right angle.
* Side-to-Side and end-to-end stackable.
* Custom design provides wide products flexibility.

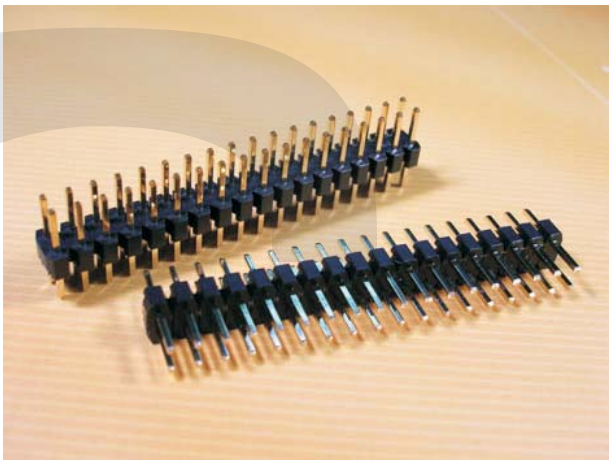

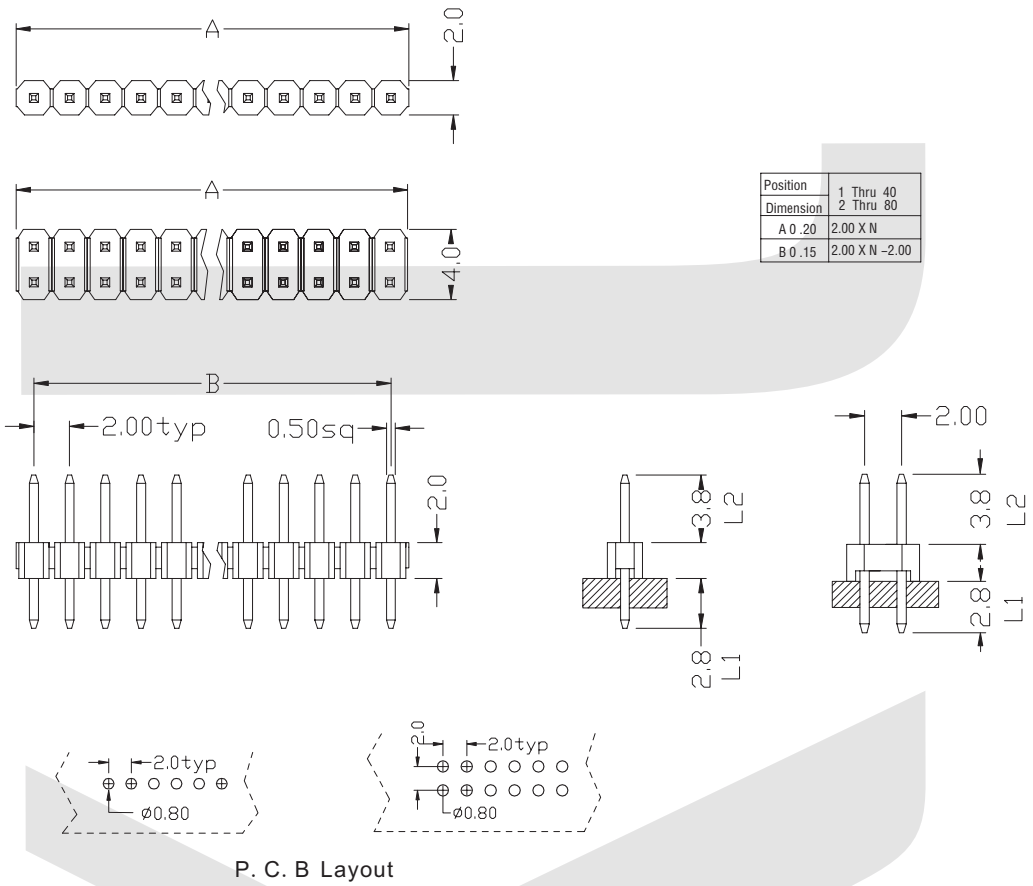

Position	1 Thru 40 2 Thru 80
Dimension	
A 0 .20	2.00 X N
B 0 .15	2.00 X N –2.00

P. C. B Layout

ORDER INFORMATION

Product No.: KLS1-207B-1-XX-S

Pos. No.
2.00mm Pin Header Series
1=Single layer 2=Double layer
Tail Style: S=Straight Pin R=Right Pin T=SMT Pin
Total pin number: XX=01-80Pin

Pin Header Series

KLS1-207B Pin Header 2.00mm(0.079") Right Pin Type

Electrical Characteristics:

Current Rating:1 AMP
Insulator Resistance: 5000MΩmin. at DC 500V
Contact Resistance: 20mΩmax. at DC 100mA
Operating Temperature: -45ºC~+105ºC

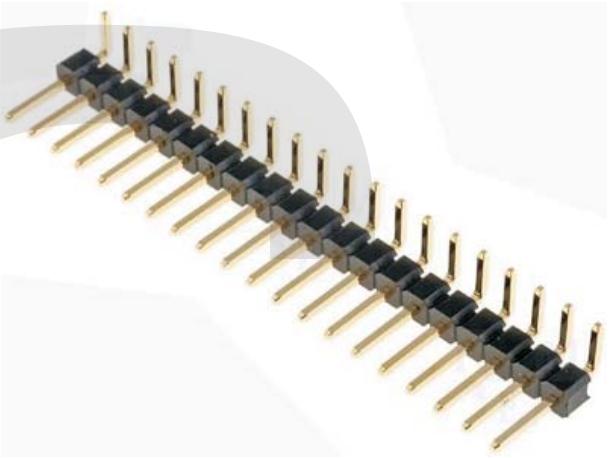

Material:

Housing:30% Glass filled PBT UL94V-0
Contacts: Brass
Plating:Gold plated: 0.8u" over 50u" nickel
Tin plated:100u" over 50u" nickel

Features:

* Available in straight and right angle.
* Side-to-Side and end-to-end stackable.
* Custom design provides wide products flexibility.

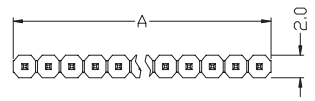

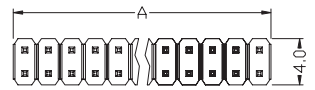

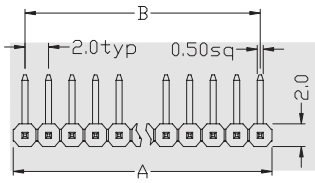

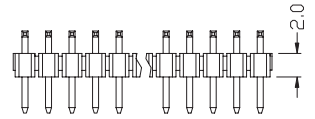

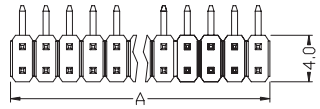

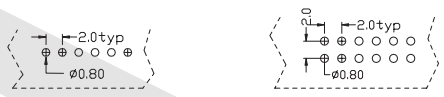

P. C. B Layout

Position	1 Thru 40 2 Thru 80
Dimension	
A 0 .20	2.00 X N
B 0 .15	2.00 X N -2.00

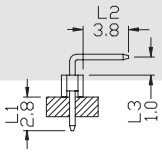

R1 TYPE

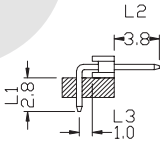

R2 TYPE

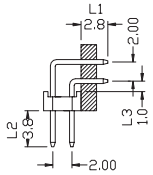

R1 TYPE

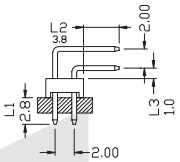

R2 TYPE

ORDER INFORMATION

Product No.: KLS1-207B-1-XX-R 1

Pos. No.
2.00mm Pin Header Series
1=Single layer 2=Double layer
Right Pin Type
Tail Style: S=Straight Pin R=Right Pin T=SMT Pin
Total pin number: XX=01-80Pin

Pin Header Series

KLS1-207B Pin Header 2.00mm(0.079") Single layer SMT Pin Type

Electrical Characteristics:

Current Rating:1 AMP
Insulator Resistance: 5000MΩmin. at DC 500V
Contact Resistance: 20mΩmax. at DC 100mA
Operating Temperature: -45ºC~+105ºC

Material:

Housing:30% Glass filled PBT UL94V-0
Contacts: Brass
Plating:Gold plated: 0.8u" over 50u" nickel
Tin plated:100u" over 50u" nickel

Features:

* Available in straight and right angle.
* Side-to-Side and end-to-end stackable.
* Custom design provides wide products flexibility.



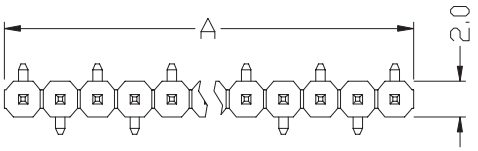

T1

Position	1 Thru 40
Dimension	
A 0.20	2.00 X N
B 0.15	2.00 X N -2.00

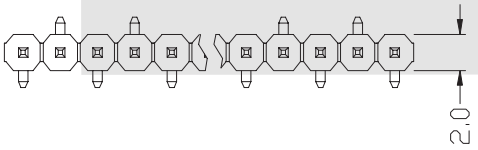

T2

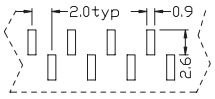

T1 TYPE

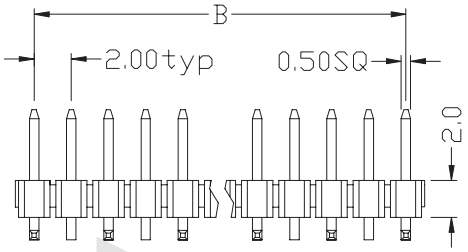

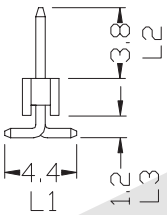

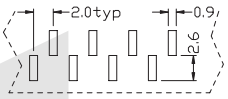

T2 TYPE

P. C. B Layout

ORDER INFORMATION

Product No.: KLS1-207B-1-XX-T 1

Pos. No.
2.00mm Pin Header Series
1=Single layer 2=Double layer
SMT Pin Type
Tail Style: S=Straight Pin R=Right Pin T=SMT Pin
Total pin number: XX=01-40Pin

Pin Header Series

KLS1-207B Pin Header 2.00mm(0.079") Double layer SMT Pin

Electrical Characteristics:

Current Rating:1 AMP
Insulator Resistance: 5000MΩmin. at DC 500V
Contact Resistance: 20mΩmax. at DC 100mA
Operating Temperature: -45ºC~+105ºC

Material:

Housing:30% Glass filled PBT UL94V-0
Contacts: Brass
Plating:Gold plated: 0.8u" over 50u" nickel
Tin plated:100u" over 50u" nickel

Features:

* Available in straight and right angle.
* Side-to-Side and end-to-end stackable.
* Custom design provides wide products flexibility.

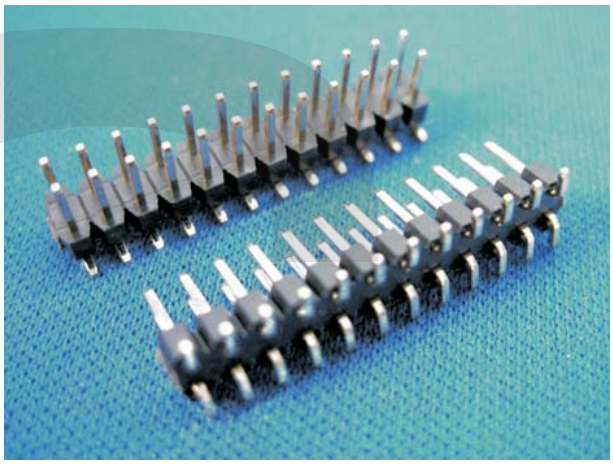

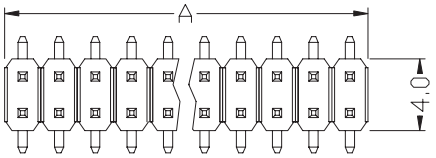

Position / Dimension	2 Thru 80
A 0.20	2.00 X N
B 0.15	2.00 X N -2.00

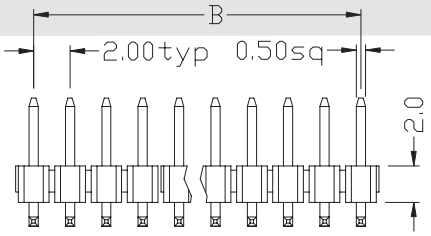

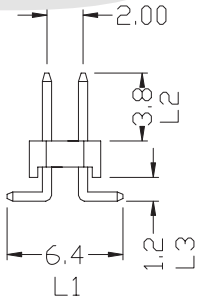

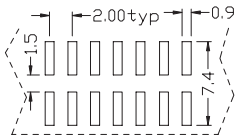

P. C. B Layout

ORDER INFORMATION

Product No.: KLS1-207B-2-XX-T

Pos. No.
2.00mm Pin Header Series
1=Single layer 2=Double layer
Tail Style: S=Straight Pin R=Right Pin T=SMT Pin
Total pin number: XX=02-80Pin

Pin Header Series

KLS1-207B Pin Header 2.00mm(0.079") Double layer SMT Pin

Electrical Characteristics:

Current Rating:1 AMP
Insulator Resistance: 5000MΩmin. at DC 500V
Contact Resistance: 20mΩmax. at DC 100mA
Operating Temperature: -45ºC~+105ºC

Material:

Housing:30% Glass filled PBT UL94V-0
Contacts: Brass
Plating:Gold plated: 0.8u" over 50u" nickel
Tin plated:100u" over 50u" nickel

Features:

* Available in straight and right angle.
* Side-to-Side and end-to-end stackable.
* Custom design provides wide products flexibility.

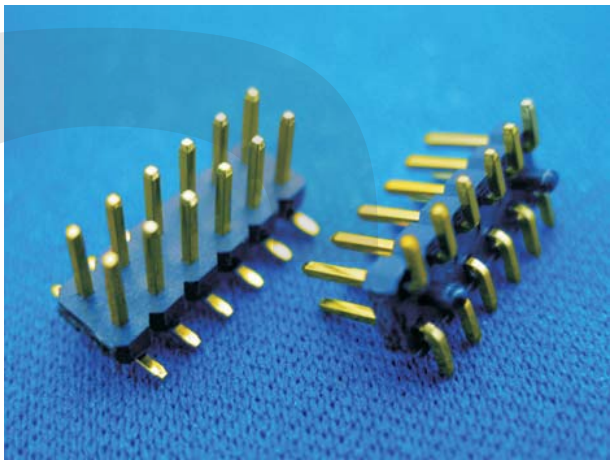

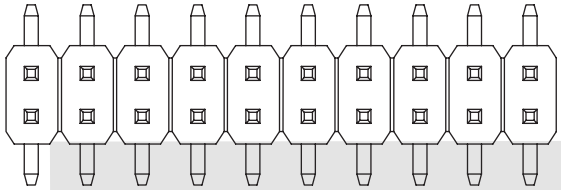

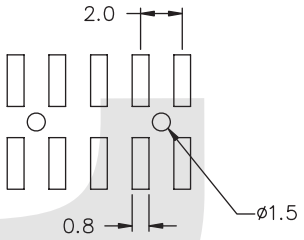

P. C. B Layout

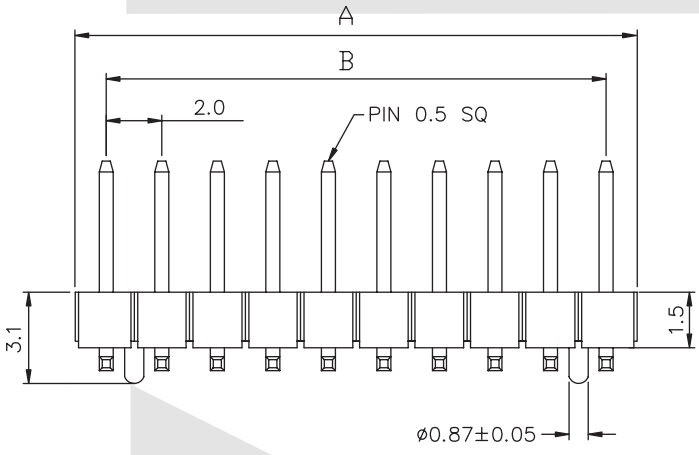

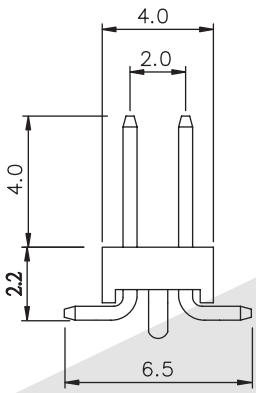

Position	2 Thru 80
Dimension	
A 0 .20	2.00 X N
B 0 .15	2.00 X N -2.00

ORDER INFORMATION

Product No.: KLS1-207B-2-XX-T 3

Pos. No.
2.00mm Pin Header Series
1=Single layer 2=Double layer
SMT Pin Type
Tail Style: S=Straight Pin R=Right Pin T=SMT Pin
Total pin number: XX=02-80Pin

PIN Header Series

KLS1-218B PIN HEADER 2.0mm (0.079 ") Dual insulators high versatility

Electrical Characteristics:

Current Rating:1 AMP
Insulator Resistance: 5000MΩmin. at DC 500V
Contact Resistance: 20mΩmax. at DC 100mA
Operating Temperature: -45ºC~+105ºC

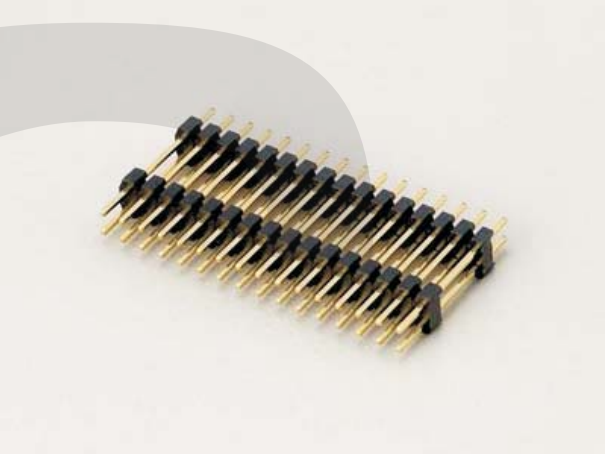

Material:

Housing:30% Glass filled PBT UL94V-0
Contacts: Brass
Plating:Gold plated:0.8u". over 50u" nickel
Tin plated:100u". over 50u" nickel

Features:

* Dual insulators offer high versatility
* Side-to-Side and end-to-end stackable.
* Custom design provides excellent products flexibility.

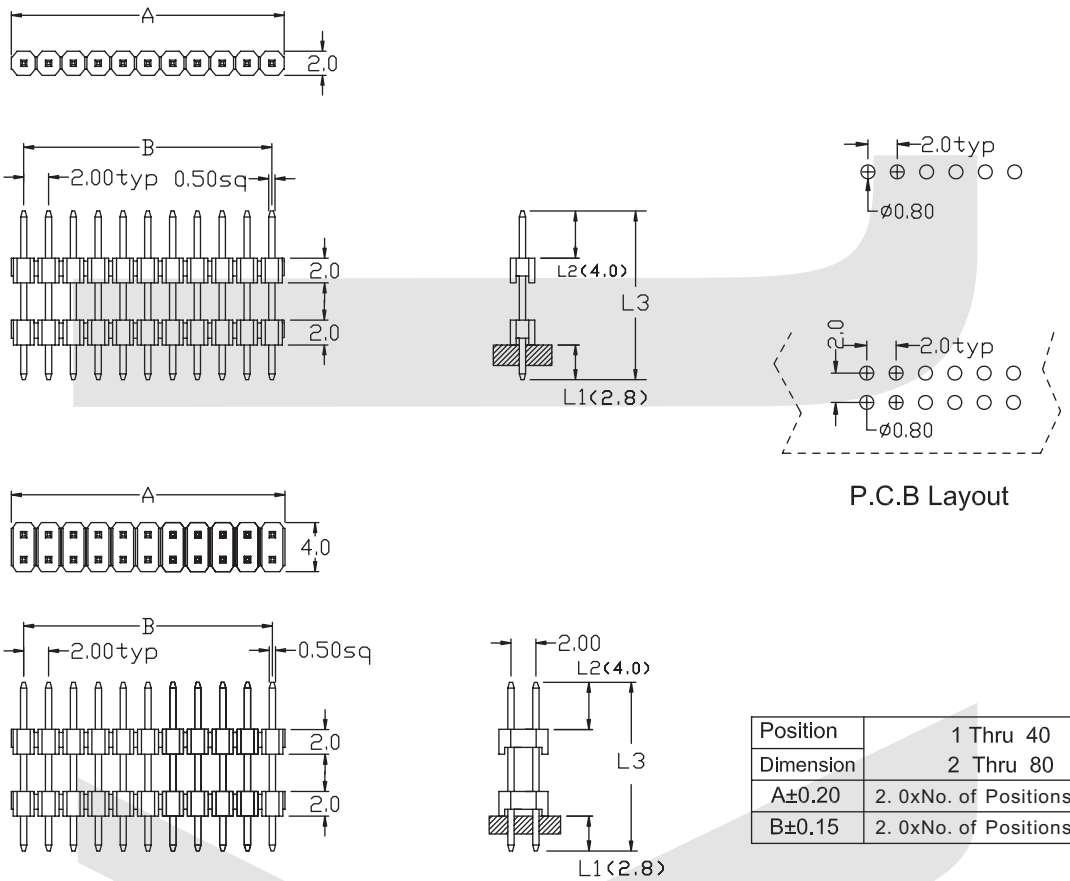

Position	1 Thru 40
Dimension	2 Thru 80
A±0.20	2. 0xNo. of Positions
B±0.15	2. 0xNo. of Positions-2. 0

ORDER INFORMATION

Product No.: KLS1-218B-1-XX-S-L1*L2*L3

Pos. No.
Pin Header 2.0mm Dual insulators high versatility Series
1=Single layer 2=Double layer
Total pin number : XX=01-80Pin
Tail Style: S=Straight Pin R=Right Pin T=SMT Pin
L1\L2\L3 Size

PIN Header Series

KLS1-218B PIN HEADER 2.0mm (0.079 ") Dual insulators high versatility

Electrical Characteristics:

Current Rating:1 AMP
Insulator Resistance: 5000MΩmin. at DC 500V
Contact Resistance: 20mΩmax. at DC 100mA
Operating Temperature: -45ºC~+105ºC

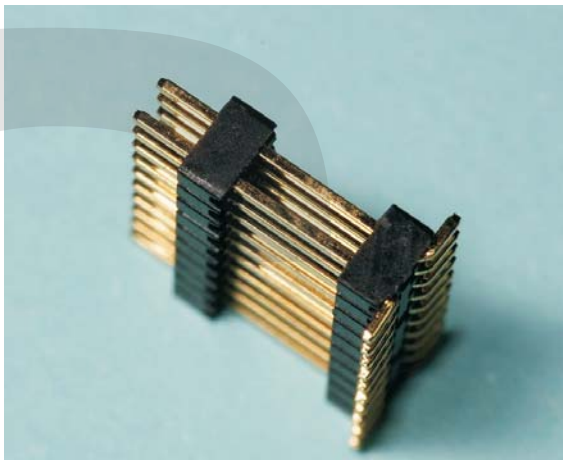

Material:

Housing:30% Glass filled PBT UL94V-0
Contacts: Brass
Plating:Gold plated:0.8u". over 50u" nickel
Tin plated:100u". over 50u" nickel

Features:

* Dual insulators offer high versatility
* Side-to-Side and end-to-end stackable.
* Custom design provides excellent products flexibility.

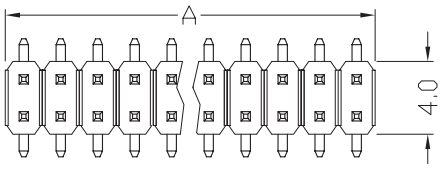

Position	2 Thru 80
Dimension	
A±0.20	2.00 X No.of Positions
B±0.15	2.00 X No.of Positions -2.00

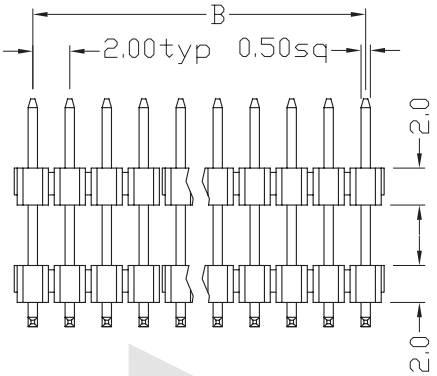

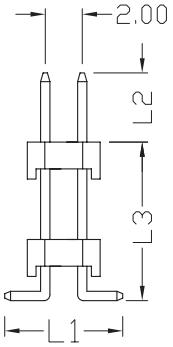

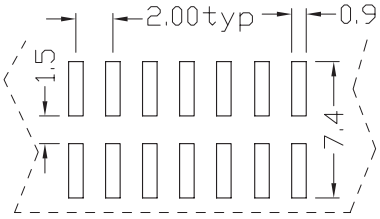

T Type
P.C.B Layout

ORDER INFORMATION

Product No.: KLS1-218B-1-XX-T -L1*L2*L3

- Pos. No.
- Pin Header 2.0mm Dual insulators high versatility Series
- 1=Single layer 2=Double layer
- Total pin number : XX=01-80Pin
- Tail Style: S=Straight Pin R=Right Pin T=SMT Pin
- L1\L2\L3 Size

PIN Header Series

KLS1-218B PIN HEADER 2.0mm (0.079 ") Dual insulators high versatility

Electrical Characteristics:

Current Rating:1 AMP
Insulator Resistance: 5000MΩmin. at DC 500V
Contact Resistance: 20mΩmax. at DC 100mA
Operating Temperature: -45ºC~+105ºC

Material:

Housing:30% Glass filled PBT UL94V-0
Contacts: Brass
Plating:Gold plated:0.8u". over 50u" nickel
Tin plated:100u". over 50u" nickel

Features:

* Dual insulators offer high versatility
* Side-to-Side and end-to-end stackable.
* Custom design provides excellent products flexibility.

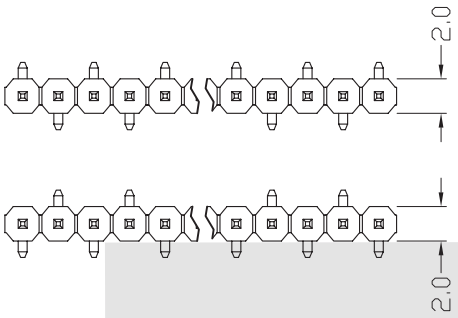

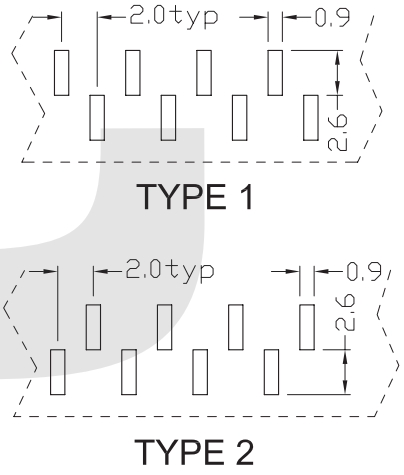

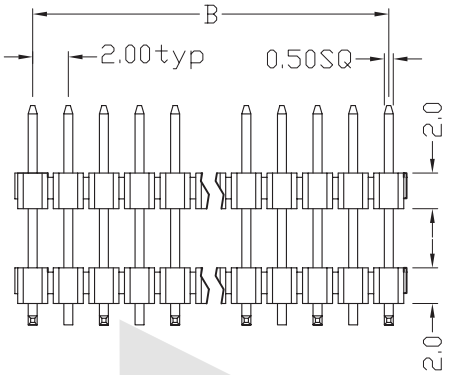

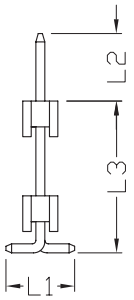

Position	1 Thru 40
Dimension	
A±0.20	2.00 X No.of Positions
B±0.15	2.00 X No.of Positions -2.00

ORDER INFORMATION

Product No.: KLS1-218B-1-XX-T 1-L1*L2*L3

- Pos. No.
- Pin Header 2.0mm Dual insulators high versatility Series
- 1=Single layer 2=Double layer
- Total pin number : XX=01-80Pin
- Tail Style: S=Straight Pin R=Right Pin T=SMT Pin
- SMT Pin Type
- L1\L2\L3 Size

I

Pin Header Series

KLS1-207 PIN HEADER 2.54mm(0.100") Straight Pin Type

Electrical Characteristics:

Current Rating:1 AMP
Insulator Resistance: 5000MΩmin. at DC 500V
Contact Resistance: 20mΩmax. at DC 100mA
Operating Temperature: -45°C~+105°C

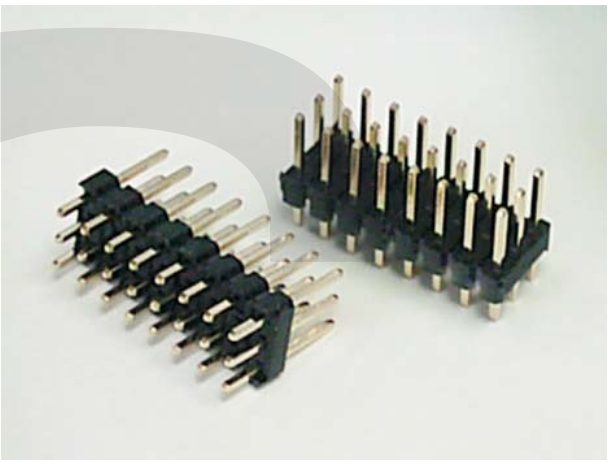

Material:

Housing:30% Glass filled PBT UL94V-0
Contacts: Brass
Plating:Selective gold plated : gold plated on mating area and nickel plated on wire Cutting area
Gold plated: 0.8u " over 50u " nickel
Tin plated:100u " over 50u " nickel

Features:

* Available in straight and right angle.
* Side-to-side and end-to-end stackable.
* Custom design offered.

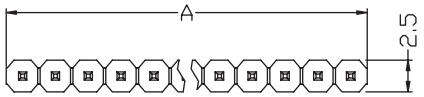

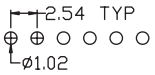

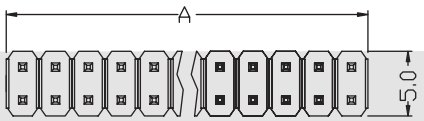

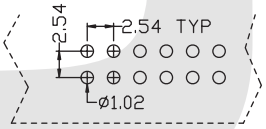

P. C. B Layout

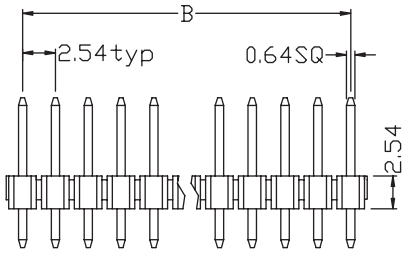

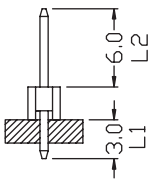

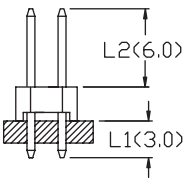

Position	1 Thru 40
Dimenson	2 Thru 80
A±0.20	2.54xN
B±0.15	2.54xN-2.54

ORDER INFORMATION

Product No.: KLS1-207-1-XX-S

Pos. No.
2.54mm Pin Header Series
1-Single layer 2-Double layer
Total pin number: XX=01-80Pin
Tail Style: S=Straight Pin R=Right Pin T=SMT Pin

Pin Header Series

I

KLS1-207 PIN HEADER 2.54mm(0.100") Right Pin Type

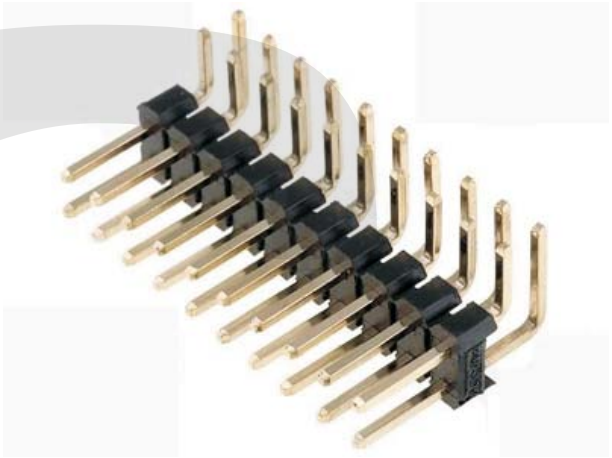

Electrical Characteristics:

Current Rating:1 AMP
Insulator Resistance: 5000MΩmin. at DC 500V
Contact Resistance: 20mΩmax. at DC 100mA
Operating Temperature: -45°C~+105°C

Material:

Housing:30% Glass filled PBT UL94V-0
Contacts: Brass
Plating:Selective gold plated : gold plated on mating area and nickel plated on wire Cutting area
Gold plated: 0.8u " over 50u " nickel
Tin plated:100u " over 50u " nickel

Features:

* Available in straight and right angle.
* Side-to-side and end-to-end stackable.
* Custom design offered.

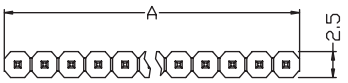

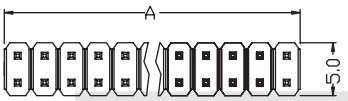

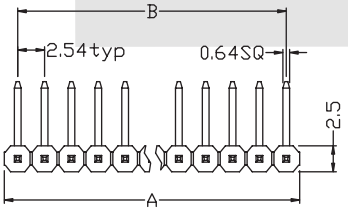

Position	1 Thru 40
Dimenson	2 Thru 80
A±0.20	2.54xN
B±0.15	2.54xN-2.54

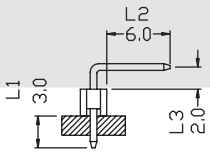

R1 TYPE

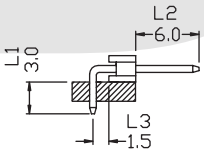

R2 TYPE

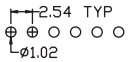

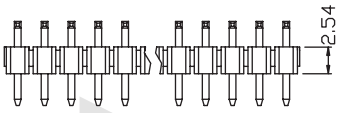

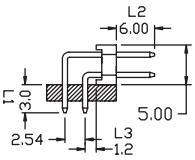

R1 TYPE

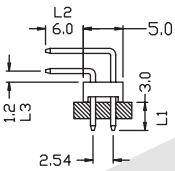

R2 TYPE

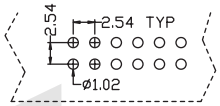

P. C. B Layout

ORDER INFORMATION

Product No.: KLS1-207-1-XX-R 1

- Pos. No.
- 2.54mm Pin Header Series
- 1-Single layer 2-Double layer
- Total pin number: XX=01-80Pin
- Tail Style: S=Straight Pin R=Right Pin T=SMT Pin
- Right Pin Type

Pin Header Series

KLS1-207 PIN HEADER 2.54mm(0.100") Single layer SMT Pin Type

Electrical Characteristics:

Current Rating:1 AMP
Insulator Resistance: 5000MΩmin. at DC 500V
Contact Resistance: 20mΩmax. at DC 100mA
Operating Temperature: -45°C~+105°C

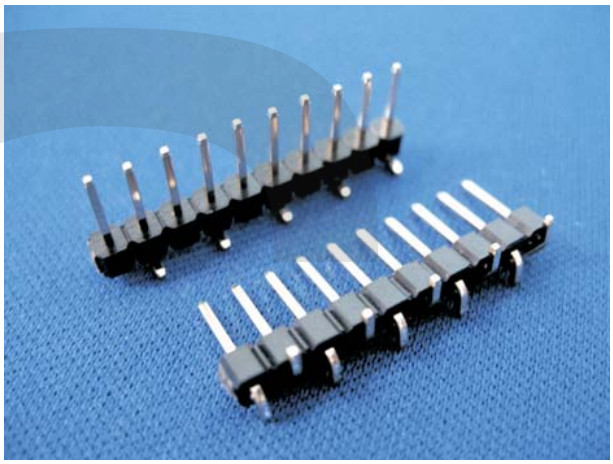

Material:

Housing:30% Glass filled PBT UL94V-0
Contacts: Brass
Plating:Selective gold plated : gold plated on mating area and nickel plated on wire Cutting area
Gold plated: 0.8u " over 50u " nickel
Tin plated:100u " over 50u " nickel

Features:

* Available in straight and right angle.
* Side-to-side and end-to-end stackable.
* Custom design offered.

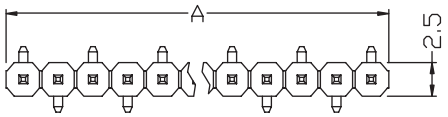

T1 TYPE



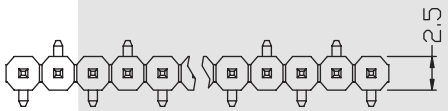

T2 TYPE

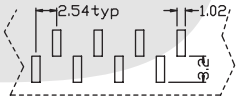

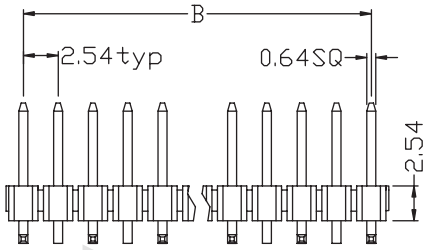

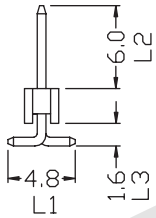

Position	1 Thru 40
Dimenson	2 Thru 80
A±0.20	2.54xN
B±0.15	2.54xN-2.54

ORDER INFORMATION

Product No.: KLS1-207-1-XX-T 1

- Pos. No.
- 2.54mm Pin Header Series
- 1-Single layer 2-Double layer
- Total pin number: XX=01-80Pin
- Tail Style: S=Straight Pin R=Right Pin T=SMT Pin
- SMT Pin Type

Pin Header Series

KLS1-207 PIN HEADER 2.54mm(0.100") Double layer SMT Pin Type

Electrical Characteristics:

Current Rating:1 AMP
Insulator Resistance: 5000MΩmin. at DC 500V
Contact Resistance: 20mΩmax. at DC 100mA
Operating Temperature: -45°C~+105°C

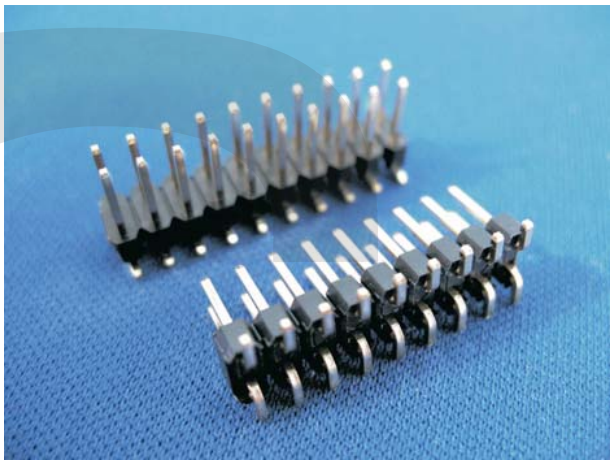

Material:

Housing:30% Glass filled PBT UL94V-0
Contacts: Brass
Plating:Selective gold plated : gold plated on mating area and nickel plated on wire Cutting area
Gold plated: 0.8u " over 50u " nickel
Tin plated:100u " over 50u " nickel

Features:

* Available in straight and right angle.
* Side-to-side and end-to-end stackable.
* Custom design offered.

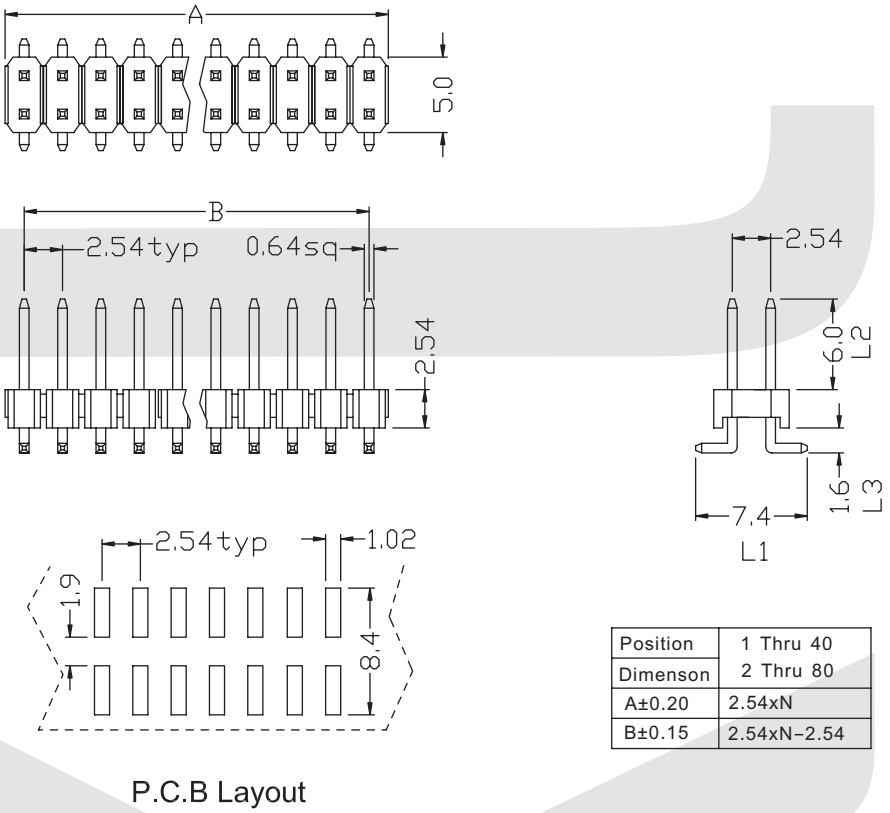

P.C.B Layout

Position	1 Thru 40
Dimenson	2 Thru 80
A±0.20	2.54xN
B±0.15	2.54xN-2.54

ORDER INFORMATION

Product No.: KLS1-207-2-XX-T

- Pos. No.
- 2.54mm Pin Header Series
- 1-Single layer 2-Double layer
- Total pin number: XX=02-80Pin
- Tail Style: S=Straight Pin R=Right Pin T=SMT Pin

Pin Header Series

KLS1-207 PIN HEADER 2.54mm(0.100") Double layer SMT Pin Type

Electrical Characteristics:

Current Rating:1 AMP
Insulator Resistance: 5000MΩmin. at DC 500V
Contact Resistance: 20mΩmax. at DC 100mA
Operating Temperature: -45°C~+105°C

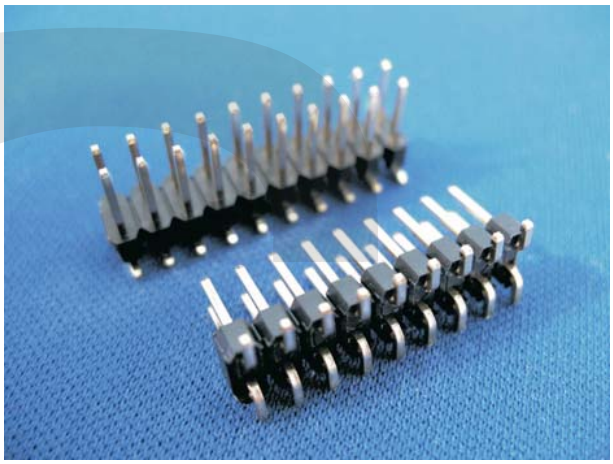

Material:

Housing:30% Glass filled PBT UL94V-0
Contacts: Brass
Plating:Selective gold plated : gold plated on mating area and nickel plated on wire Cutting area
Gold plated: 0.8u " over 50u " nickel
Tin plated:100u " over 50u " nickel

Features:

* Available in straight and right angle.
* Side-to-side and end-to-end stackable.
* Custom design offered.

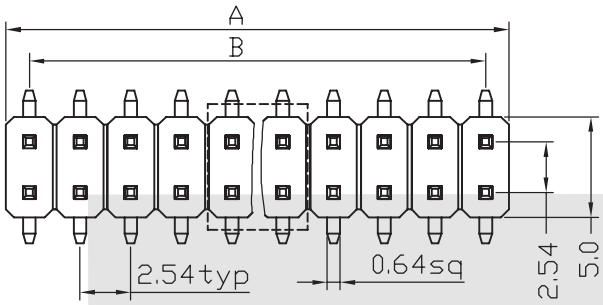

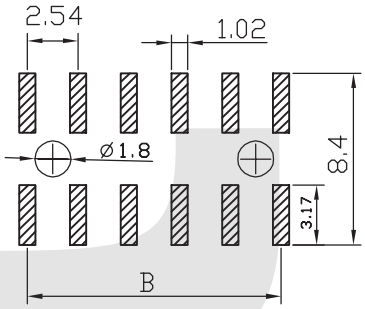

P.C.B Layout

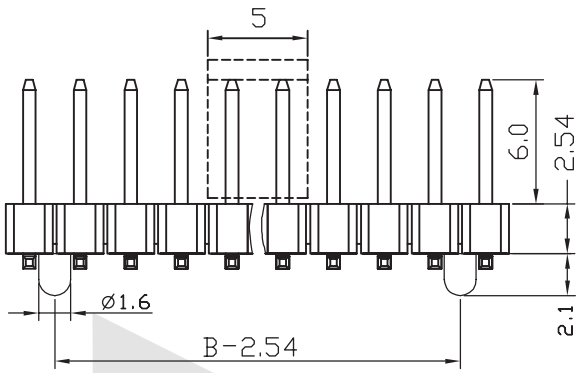

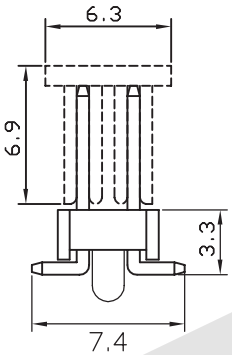

Position	1 Thru 40
Dimenson	2 Thru 80
A±0.20	2.54xN
B±0.15	2.54xN-2.54

ORDER INFORMATION

Product No.: KLS1-207-2-XX-T 3

- Pos. No.
- 2.54mm Pin Header Series
- 2-Double layer / 1-Single layer
- Total pin number: XX=02-80Pin
- Tail Style: S=Straight Pin R=Right Pin T=SMT Pin
- SMT Pin Type

PIN Header Series

KLS1-218 PIN HEADER 2.54mm(0.100") Dual insulators high versatility

Electrical Characteristics:

Current Rating:1 AMP
Insulator Resistance: 5000MΩmin. at DC 500V
Contact Resistance: 20mΩmax. at DC 100mA
Operating Temperature: -45ºC~+105ºC

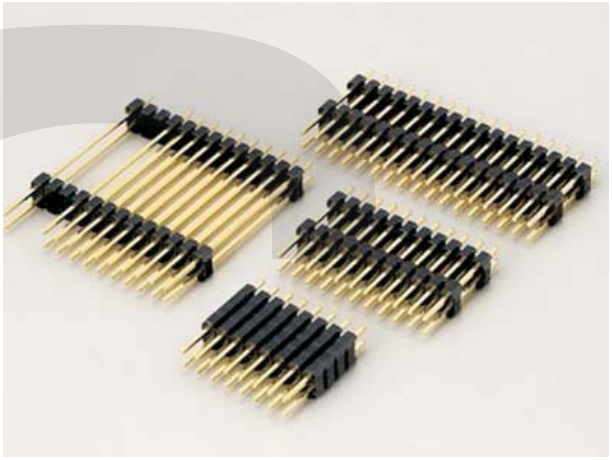

Material:

Housing:30% Glass filled PBT UL94V-0
Contacts: Brass
Plating: Selective gold plated: gold plated on mating area and nickel plated on wire cutting area
Gold plated: 0.8u" over 50u" nickel
Tin plated: 100u" over 50u" nickel

Features:

* Dual insulators offer high versatility.
* Side-to-side and end-to-end stackable.
* Custom design provides excellent products flexibility.

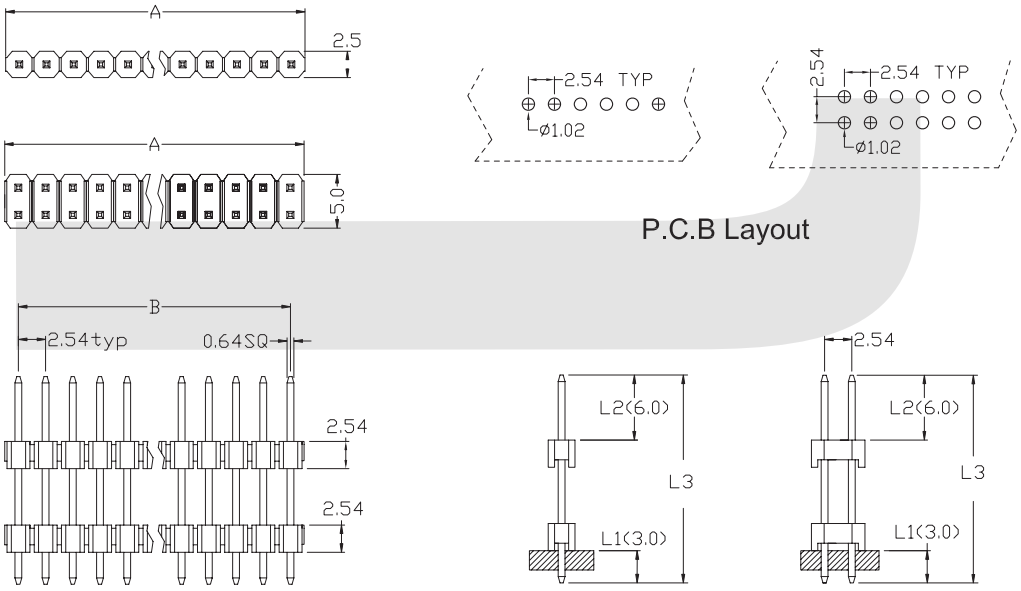

P.C.B Layout

Position	1 Thru 40
Dimension	2 Thru 80
A±0.20	2.54 X No.of Positions
B±0.15	2.54 X No.of Positions -2.54

ORDER INFORMATION

Product No.: KLS1-218-1-XX-S-L1*L2*L3

Pos. No.
Pin Header 2.54mm Dual insulators high versatility Series
1=Single layer 2=Double layer
Total pin number: XX=01-80Pin
Tail Style: S=Straight Pin R=Right Pin T=SMT
L1\L2\L3 Size

PIN Header Series

KLS1-218 PIN HEADER 2.54mm(0.100") Dual insulators high versatility

Electrical Characteristics:

Current Rating:1 AMP
Insulator Resistance: 5000MΩmin. at DC 500V
Contact Resistance: 20mΩmax. at DC 100mA
Operating Temperature: -45ºC~+105ºC

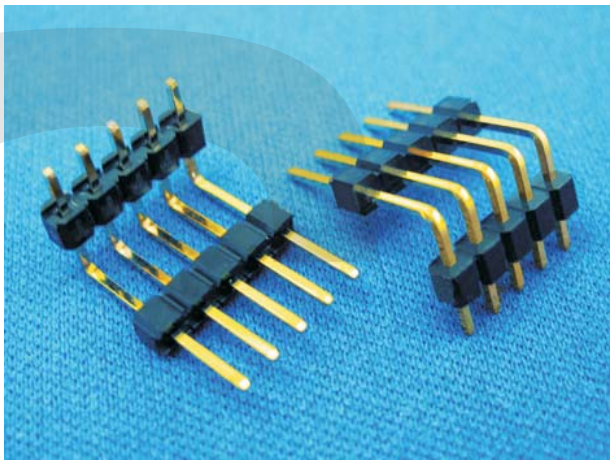

Material:

Housing:30% Glass filled PBT UL94V-0
Contacts: Brass
Plating: Selective gold plated: gold plated on mating area and nickel plated on wire cutting area
Gold plated: 0.8u" over 50u" nickel
Tin plated: 100u" over 50u" nickel

Features:

* Dual insulators offer high versatility.
* Side-to-side and end-to-end stackable.
* Custom design provides excellent products flexibility.

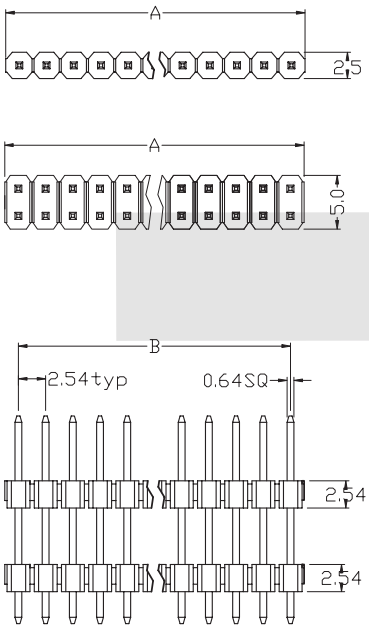

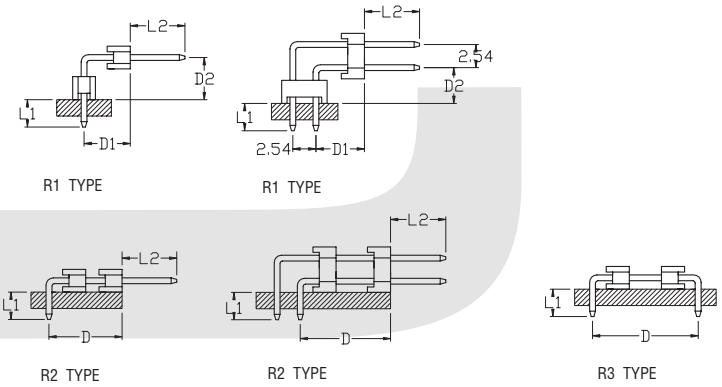

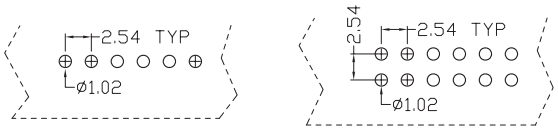

P.C.B Layout

Position	1 Thru 40
Dimension	2 Thru 80
A±0.20	2.54 X No.of Positions
B±0.15	2.54 X No.of Positions -2.54

ORDER INFORMATION

Product No.: KLS1-218-1-XX-R 1-L1*L2*D

Pos. No.
Pin Header 2.54mm Dual insulators high versatility Series
1=Single layer 2=Double layer
Total pin number: XX=01-80Pin
Tail Style: S=Straight Pin R=Right Pin T=SMT
Right Pin Type
L1\L2\D\D1 Size

PIN Header Series

KLS1-218 PIN HEADER 2.54mm(0.100") Dual insulators high versatility

I

Electrical Characteristics:

Current Rating:1 AMP
Insulator Resistance: 5000MΩmin. at DC 500V
Contact Resistance: 20mΩmax. at DC 100mA
Operating Temperature: -45ºC~+105ºC

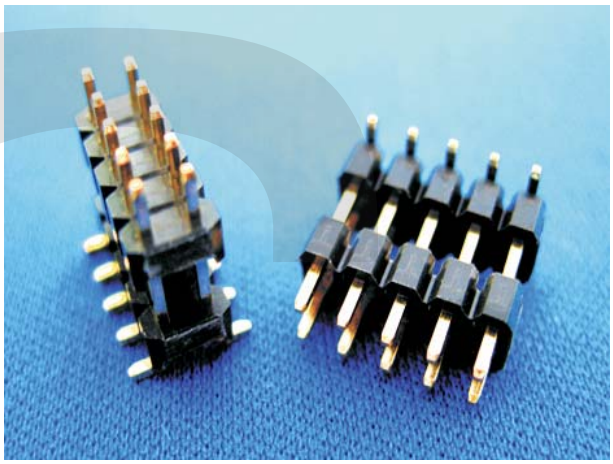

Material:

Housing:30% Glass filled PBT UL94V-0
Contacts: Brass
Plating: Selective gold plated: gold plated on mating area and nickel plated on wire cutting area
Gold plated: 0.8u" over 50u" nickel
Tin plated: 100u" over 50u" nickel

Features:

* Dual insulators offer high versatility.
* Side-to-side and end-to-end stackable.
* Custom design provides excellent products flexibility.

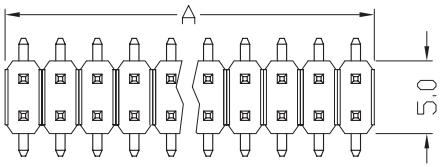

Position / Dimension	2 Thru 80
A±0.20	2.54 X No.of Positions
B±0.15	2.54 X No.of Positions -2.54

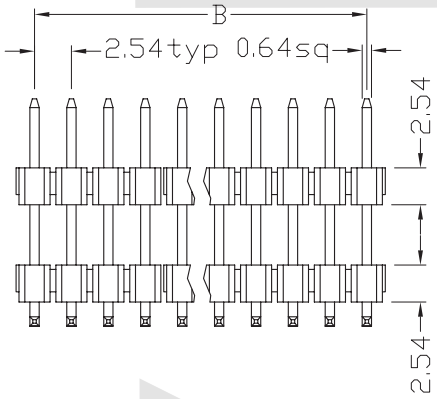

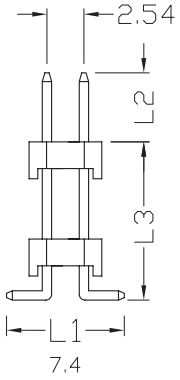

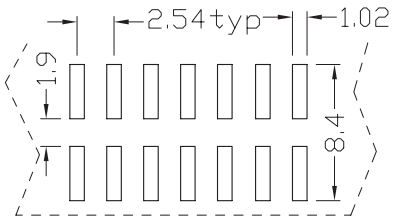

T Type
P.C.B Layout

ORDER INFORMATION

Product No.: KLS1-218-1-XX-T -L1*L2*L3

Pos. No.
Pin Header 2.54mm Dual insulators high versatility Series
1=Single layer 2=Double layer
Total pin number: XX=01-80Pin
L1\L2\L3 Size
Tail Style: S=Straight Pin R=Right Pin T=SMT

I

PIN Header Series

KLS1-218 PIN HEADER 2.54mm(0.100") Dual insulators high versatility

Electrical Characteristics:

Current Rating:1 AMP
Insulator Resistance: 5000MΩmin. at DC 500V
Contact Resistance: 20mΩmax. at DC 100mA
Operating Temperature: -45ºC~+105ºC

Material:

Housing:30% Glass filled PBT UL94V-0
Contacts: Brass
Plating: Selective gold plated: gold plated on mating area and nickel plated on wire cutting area
Gold plated: 0.8u" over 50u" nickel
Tin plated: 100u" over 50u" nickel

Features:

* Dual insulators offer high versatility.
* Side-to-side and end-to-end stackable.
* Custom design provides excellent products flexibility.

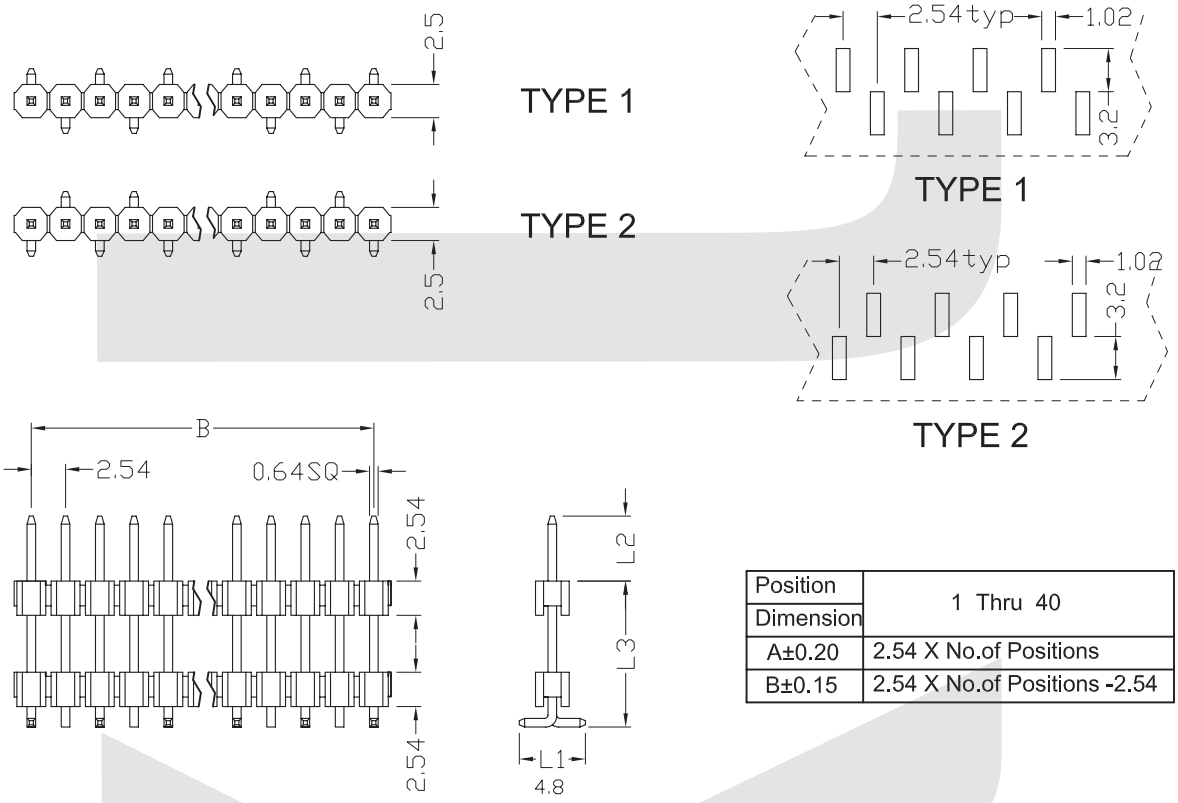

Position / Dimension	1 Thru 40
A±0.20	2.54 X No.of Positions
B±0.15	2.54 X No.of Positions -2.54

ORDER INFORMATION

Product No.: KLS1-218-1-XX-T 1-L1*L2*L3

Pos. No.
Pin Header 2.54mm Dual insulators high versatility Series
1=Single layer 2=Double layer
Total pin number: XX=01-80Pin
L1\L2\L3 Size
SMT Pin Type
Tail Style: S=Straight Pin R=Right Pin T=SMT

Pin Header Series

P/N:KLS1-207A/2.54mm (0.100″) pin header anged SMT

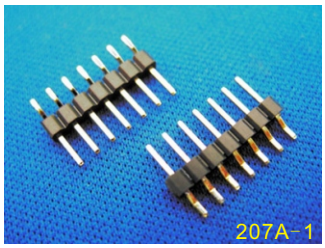

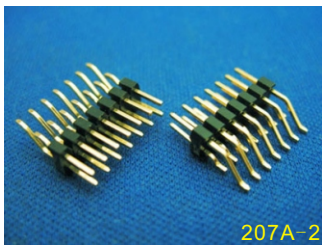

1:Features:

- Pin header 2.54mm angeld SMT
- Single and dual row
- No. Of Pins : 2P~80P

2:Electrical Characteristics:

Current rating : 3A
Operating Temperature: -45°C~+105°C
Contact Resistance: 20M Ohm max.
Insulator Resistance: 1000M Ohm min. at DC 500V
Withstanding Voltage: 1000V AC

3:Material

Insulator material: Polyster UL94V-0 & PBT
Contact material : Brass
Contact plating : Au OR Sn over 50u' Ni

4:Drawing:

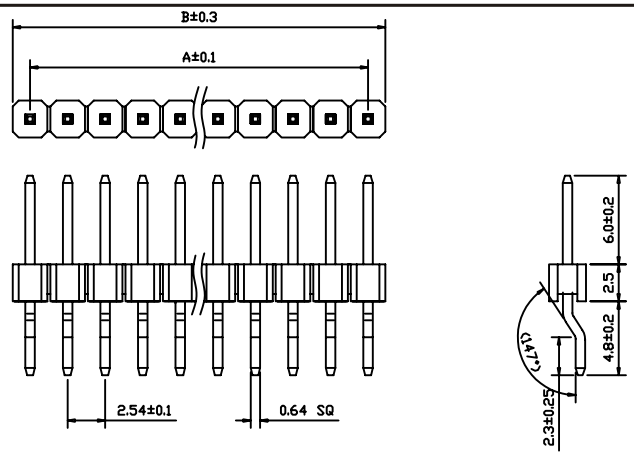

207A-1

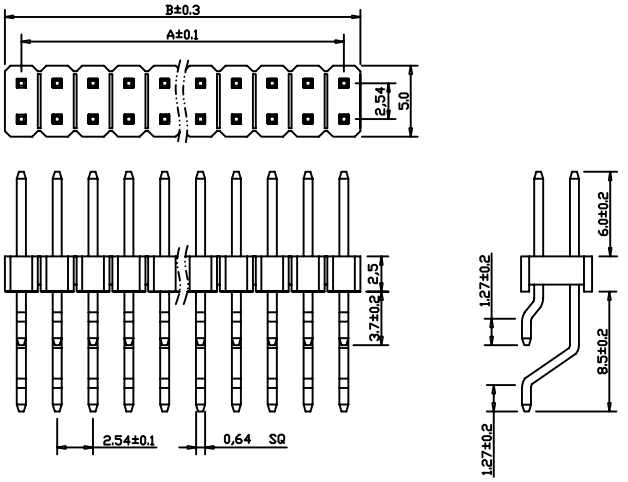

207A-2

ORDER INFORMATION

Product No.: KLS1-207A-1/2-XX

Series No.

Total pin number: XX=01-80Pin

1-Single 2-Double layer

Pin Header Series

P/N:KLS1-207E/2.00mm(0.0787″) pin header anged SMT

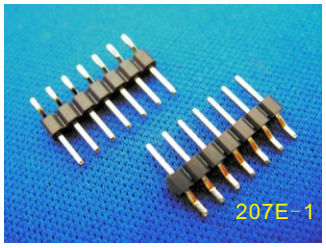

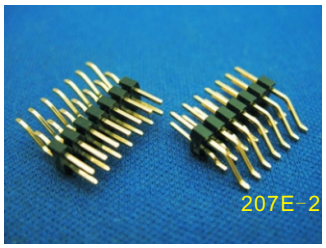

1:Features:

- Pin header 2.00(0.0787″) mm angeld SMT
- Single and dual row
- No. Of Pins : 2P~80P

2:Electrical Characteristics:

Current rating : 1A
Operating Temperature: -45ºC~+105ºC
Contact Resistance: 20M Ohm max.
Insulator Resistance: 1000M Ohm min. at DC 500V
Withstanding Voltage: 500V AC

3:Material

Insulator material: Polyster UL94V-0 & PBT
Contact material : Brass
Contact plating : Au OR Sn over 50u' Ni

4:Drawing:

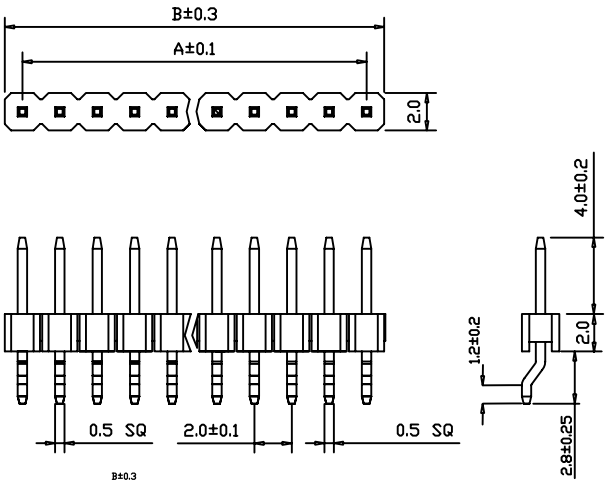

207E-1

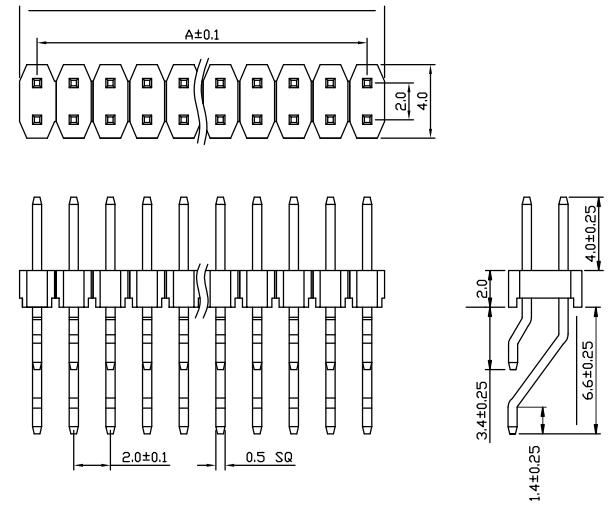

207E-2

ORDER INFORMATION

Product No.: KLS1-207E-1/2-XX

Series No.

Total pin number: XX=01-80Pin
1-Single 2-Double layer

Pin Header Series

P/N:KLS1-207F/1.27mm(0.050″) pin header anged SMT

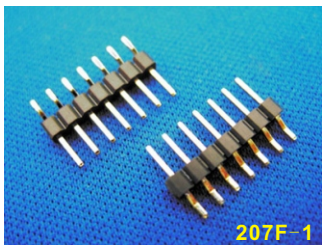

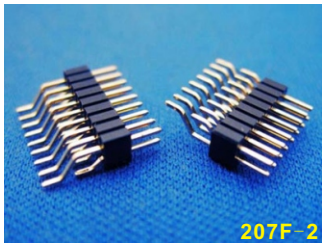

1:Features:

- Pin header 1.27(0.050″) mm angeld SMT
- Single and dual row
- No. Of Pins : 2P~80P

2:Electrical Characteristics:

Current rating : 1A
Operating Temperature: -45ºC~+105ºC
Contact Resistance: 20M Ohm max.
Insulator Resistance: 1000M Ohm min. at DC 500V
Withstanding Voltage: 500V AC

3:Material

Insulator material: Polyster UL94V-0 & PBT
Contact material : Brass
Contact plating : Au OR Sn over 50u' Ni

4:Drawing:

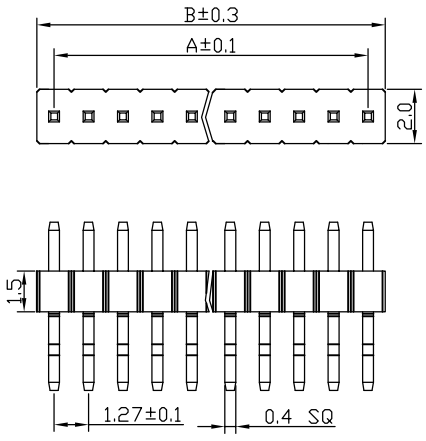

207F-1

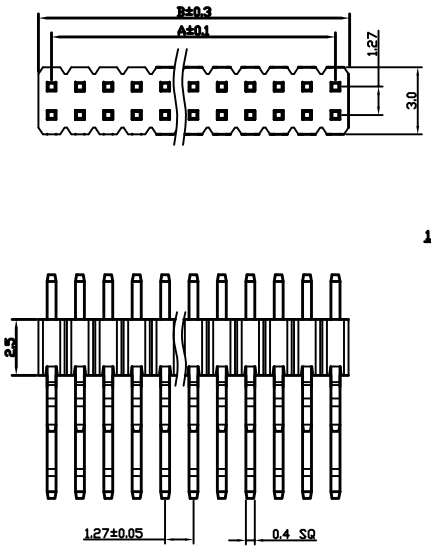

207F-2

ORDER INFORMATION

Product No.: KLS1-207F-1/2-XX

Series No.

Total pin number: XX=01-80Pin

1-Single 2-Double layer

Female Header Series

KLS1-208C Female Header 1.27mm(0.050 ")

Electrical Characteristics:

Current Rating:1 AMP
Insulator Resistance: 5000MΩmin. at DC 500V
Contact Resistance: 20mΩmax. at DC 100mA
Operating Temperature: -45°C~+105°C

Material:

Housing:30% Glass filled PBT UL94V-0
Contacts: Brass
Plating: Gold plated:0.8u″ over 50u″ nickel

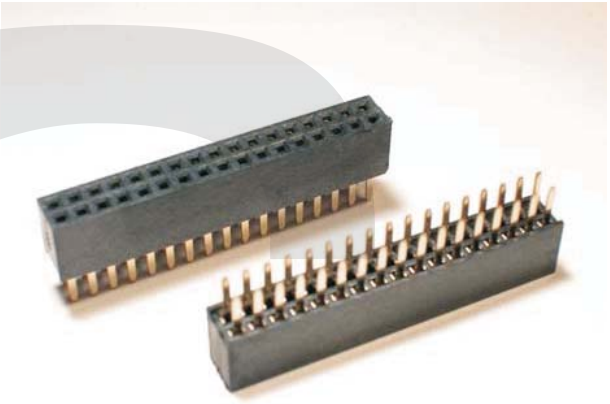

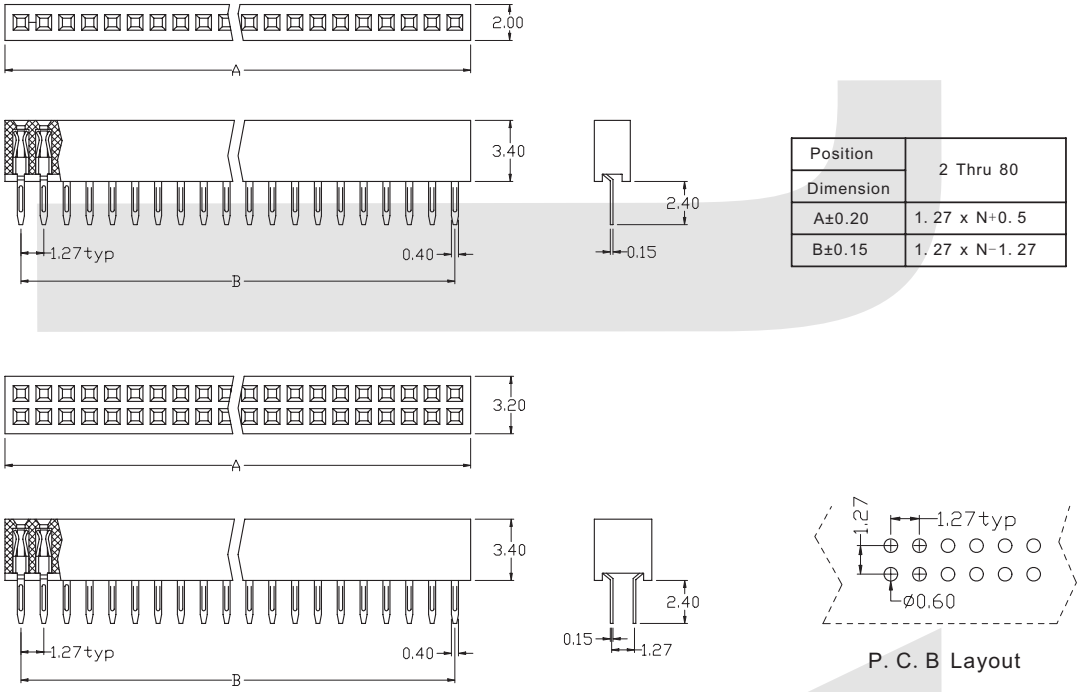

Position	2 Thru 80
Dimension	
A±0.20	1. 27 x N+0. 5
B±0.15	1. 27 x N-1. 27

P. C. B Layout

ORDER INFORMATION

Product No.: KLS1-208C-3.4-1-XX-S

Pos. No.
Female Header 1.27mm Series
Height: 4.4mm、3.4mm
Tail Style: S=Straight Pin R=Right Pin T=SMT Pin
Total pin number: XX=06-64Pin
1=Single layer 2=Double layer

Female Header Series

KLS1-208C Female Header 1.27mm(0.050 ")

Electrical Characteristics:

Current Rating:1 AMP
Insulator Resistance: 5000MΩmin. at DC 500V
Contact Resistance: 20mΩmax. at DC 100mA
Operating Temperature: -45°C~+105°C

Material:

Housing:30% Glass filled PBT UL94V-0
Contacts: Brass
Plating: Gold plated:0.8u″ over 50u″ nickel

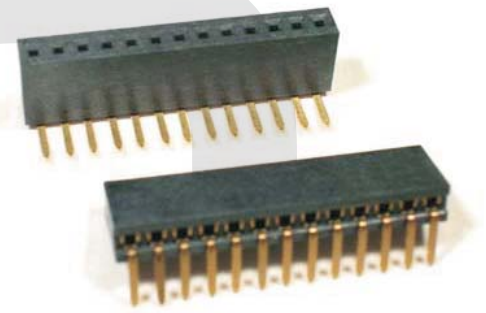

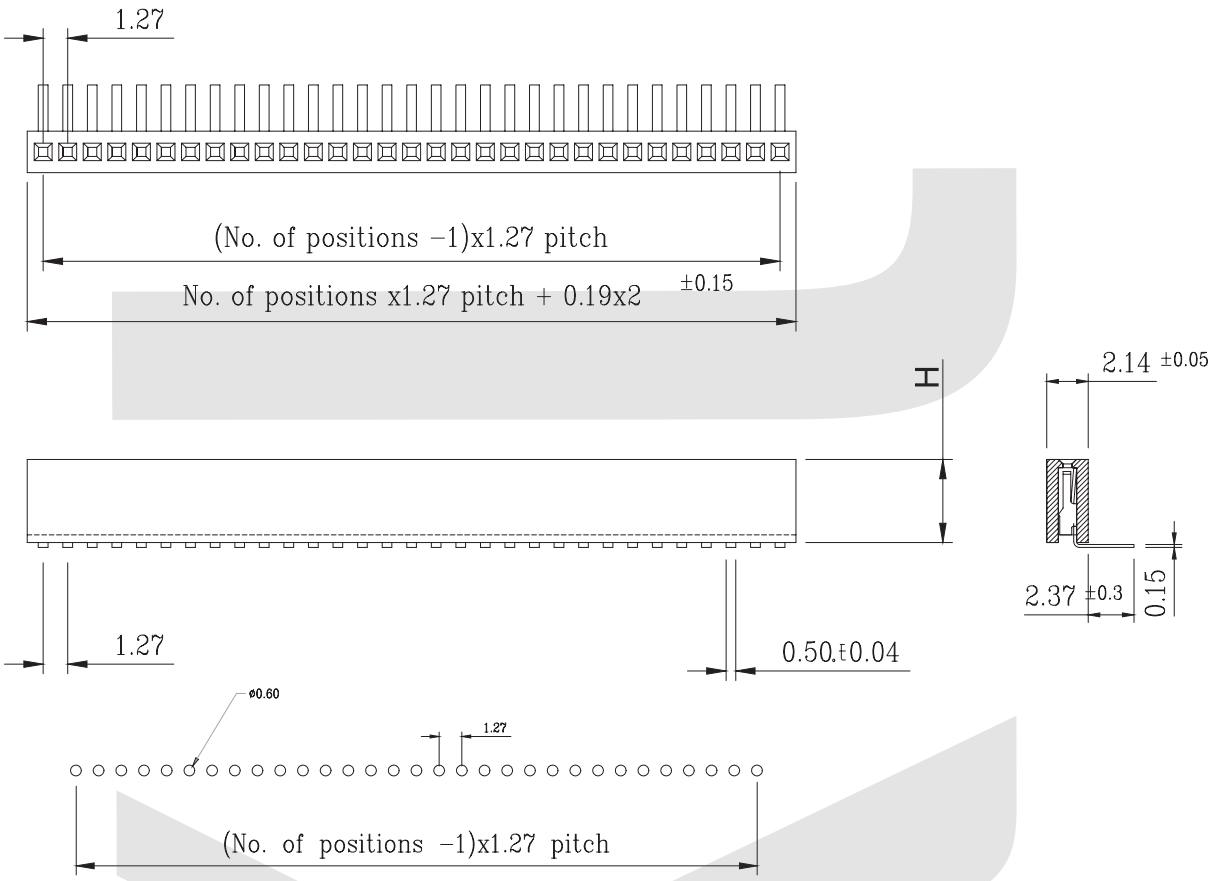

ORDER INFORMATION

Product No.: KLS1-208C-3.4-1-XX-R

Pos. No.
Female Header 1.27mm Series
Height: 4.4mm、3.4mm
Tail Style: S=Straight Pin R=Right Pin T=SMT Pin
Total pin number: XX=06-64Pin
1=Single layer 2=Double layer

Female Header Series

KLS1-208C Female Header 1.27mm(0.050")

Electrical Characteristics:

Current Rating:1 AMP
Insulator Resistance: 5000MΩmin. at DC 500V
Contact Resistance: 20mΩmax. at DC 100mA
Operating Temperature: -45°C~+105°C

Material:

Housing:30% Glass filled PBT UL94V-0
Contacts: Brass
Plating: Gold plated:0.8u″ over 50u″ nickel

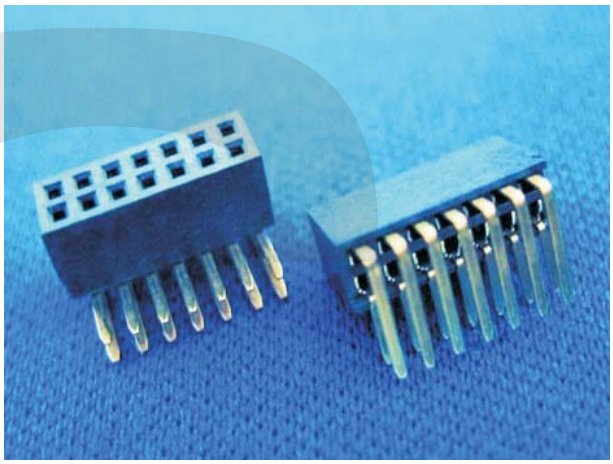

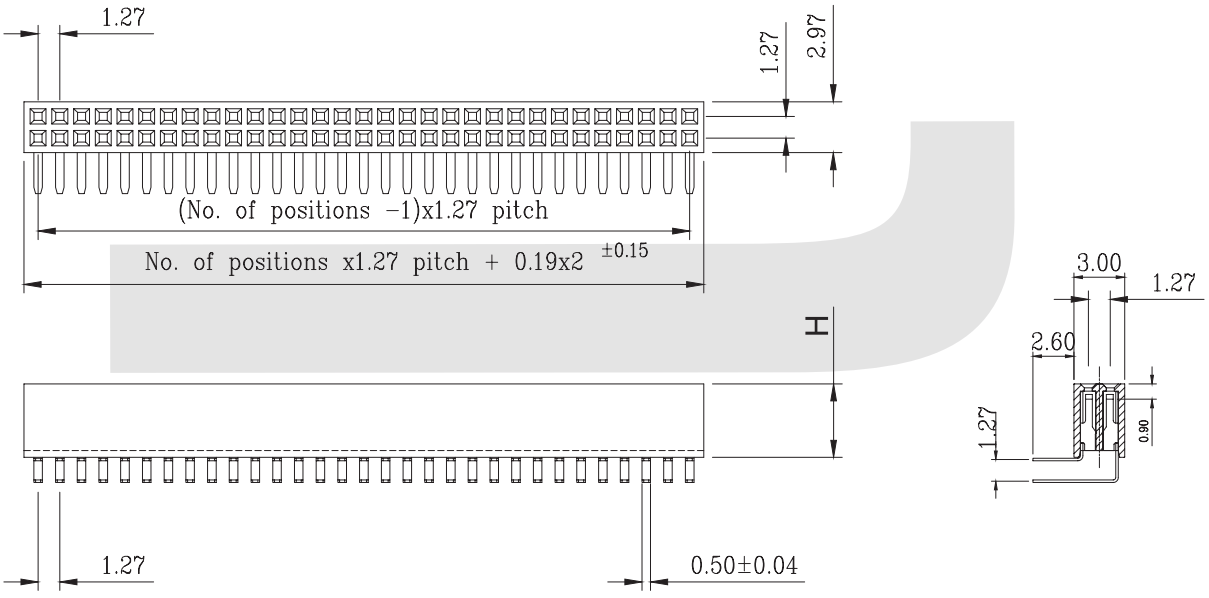

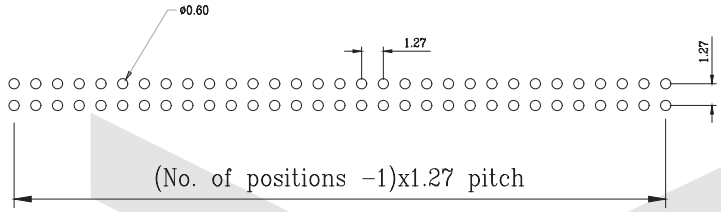

ORDER INFORMATION

Product No.: KLS1-208C-3.4-1-XX-R

Pos. No.
Female Header 1.27mm Series
Height: 4.4mm、3.4mm
Tail Style: S=Straight Pin R=Right Pin T=SMT Pin
Total pin number: XX=06-64Pin
1=Single layer 2=Double layer

Female Header Series

KLS1-208C Female Header 1.27mm(0.050 ")

I

Electrical Characteristics:

Current Rating:1 AMP
Insulator Resistance: 5000MΩmin. at DC 500V
Contact Resistance: 20mΩmax. at DC 100mA
Operating Temperature: -45°C~+105°C

Material:

Housing:30% Glass filled PBT UL94V-0
Contacts: Brass
Plating: Gold plated:0.8u″ over 50u″ nickel

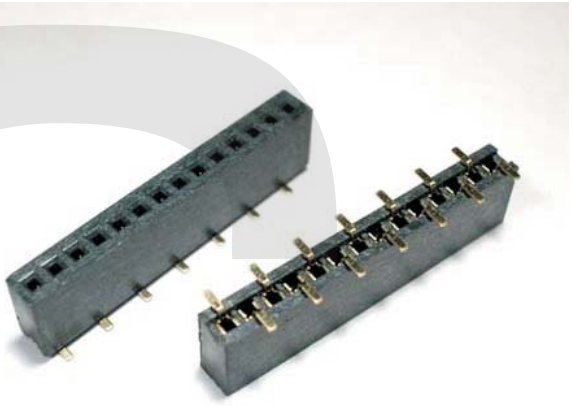

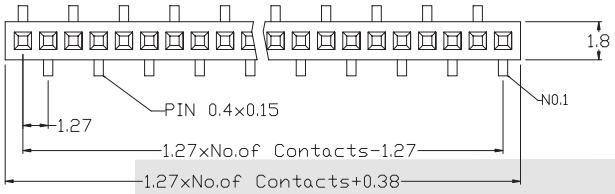

T1 Type

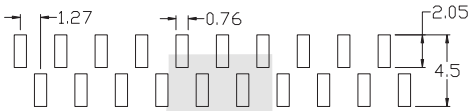

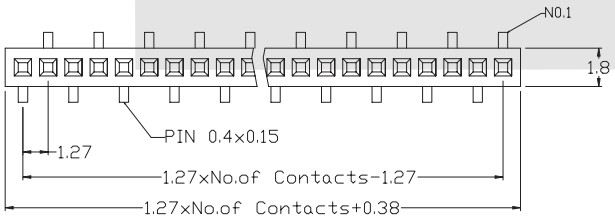

T2 Type

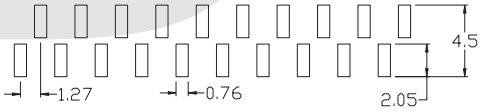

PCB Layout

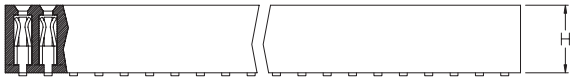

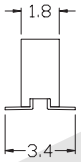

ORDER INFORMATION

Product No.: KLS1-208C-3.4-1-XX-T4

Pos. No.
Female Header 1.27mm Series
Height: 4.4mm、3.4mm、2.1mm
1=Single layer
Total pin number: XX=06-64Pin
Tail Style: S=Straight Pin R=Right Pin T=SMT Pin

Female Header Series

KLS1-208C Female Header 1.27mm(0.050 ")

Electrical Characteristics:

Current Rating:1 AMP
Insulator Resistance: 5000MΩmin. at DC 500V
Contact Resistance: 20mΩmax. at DC 100mA
Operating Temperature: -45°C~+105°C

Material:

Housing:30% Glass filled PBT UL94V-0
Contacts: Brass
Plating: Gold plated:0.8u″ over 50u″ nickel

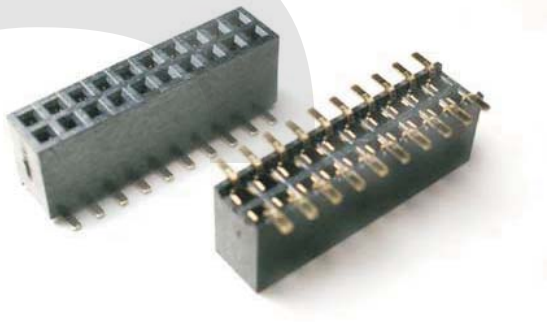

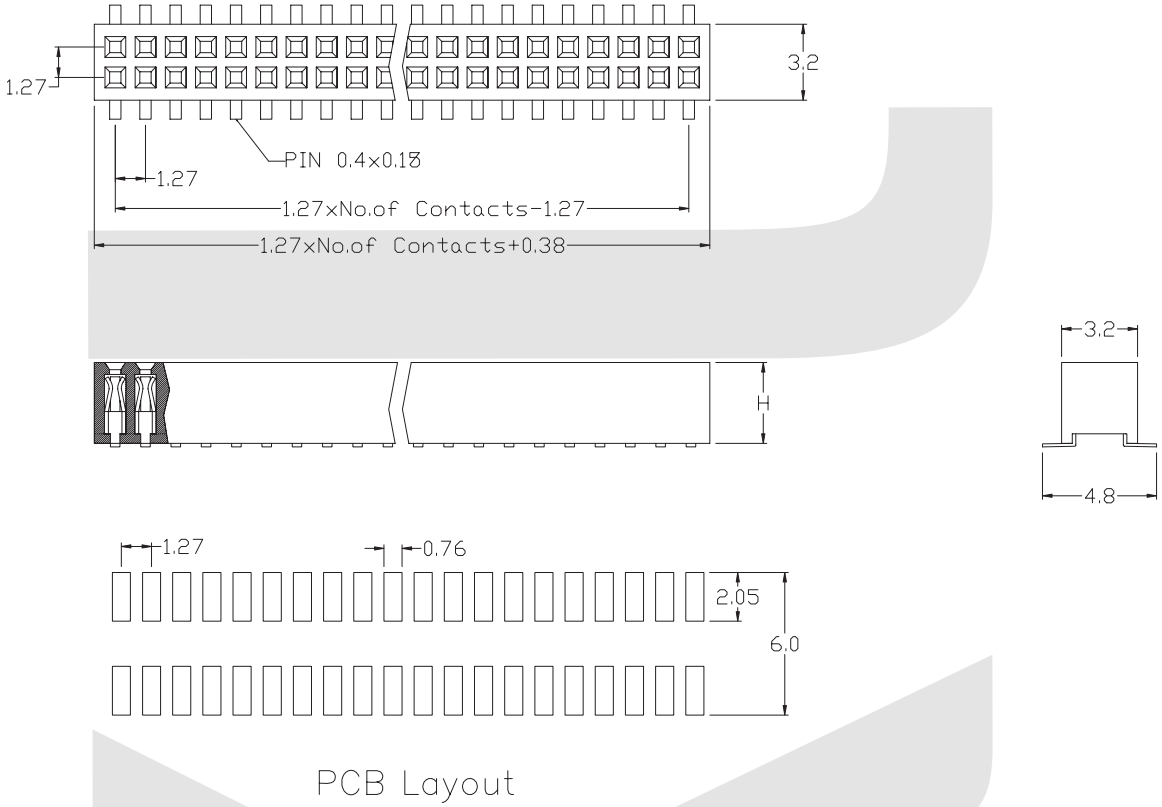

PCB Layout

ORDER INFORMATION

Product No.: KLS1-208C-3.4-2-XX-T

Pos. No.
Female Header 1.27mm Series
Height: 4.4mm、3.4mm
2=Double layer
Total pin number: XX=06-64Pin
Tail Style: S=Straight Pin R=Right Pin T=SMT Pin

Female Header Series

KLS1-208C Female Header 1.27mm(0.050")With positioning

Electrical Characteristics:

Current Rating:1 AMP
Insulator Resistance: 5000MΩmin. at DC 500V
Contact Resistance: 20mΩmax. at DC 100mA
Operating Temperature: -45°C~+105°C

Material:

Housing:30% Glass filled PBT UL94V-0
Contacts: Brass
Plating: Gold plated:0.8u″ over 50u″ nickel

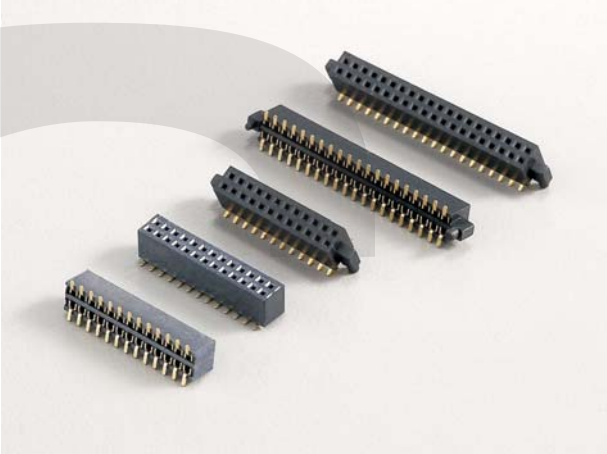

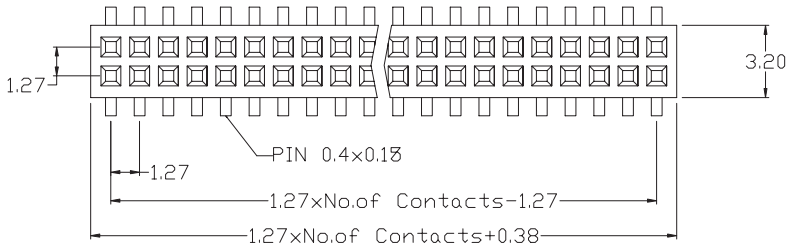

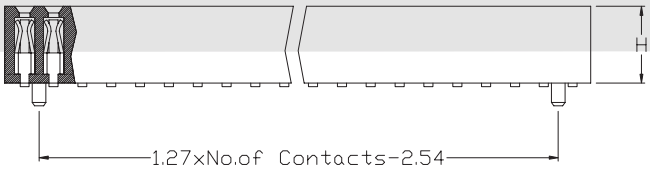

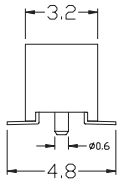

T3 Type

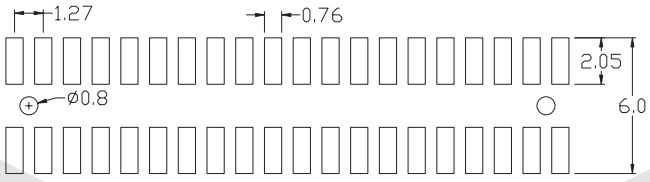

PCB Layout

ORDER INFORMATION

Product No.: KLS1-208C-4.3-1-XX-T3

Pos. No.
Female Header 1.27mm Series
Height: 3.4mm、4.3mm

Tail Style: S=Straight Pin R=Right Pin T=SMT Pin
Total pin number: XX=06-64Pin
1=Single layer 2=Double layer

Female Header Series

KLS1-208C Female Header 1.27mm(0.050 ")With positioning

Electrical Characteristics:

Current Rating:1 AMP
Insulator Resistance: 5000MΩmin. at DC 500V
Contact Resistance: 20mΩmax. at DC 100mA
Operating Temperature: -45°C~+105°C

Material:

Housing:30% Glass filled PBT UL94V-0
Contacts: Brass
Plating: Gold plated:0.8u″ over 50u″ nickel

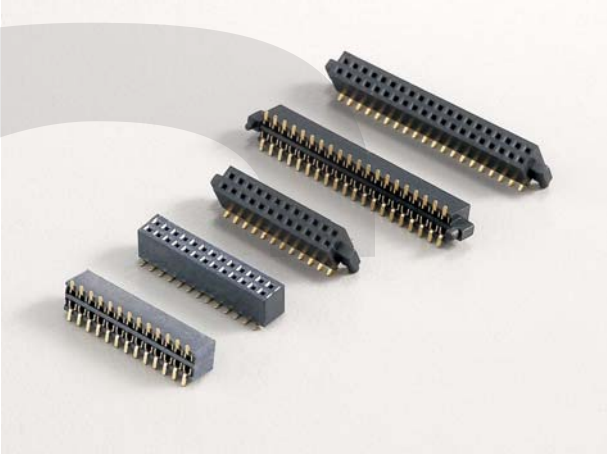

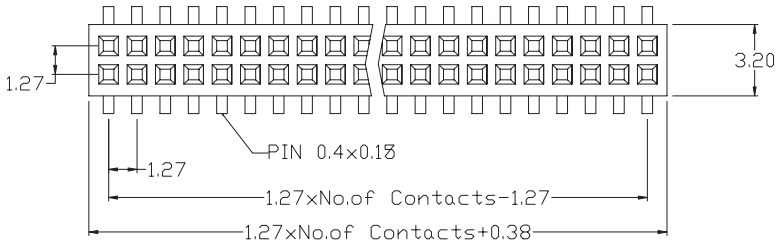

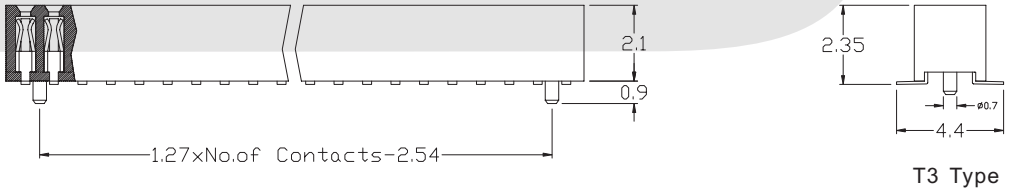

T3 Type

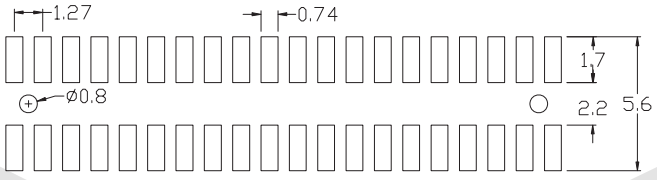

PCB Layout

ORDER INFORMATION

Product No.: KLS1-208C-2.1-1-XX-T3

Pos. No.
Female Header 1.27mm Series
Height: 2.1mm
Tail Style: S=Straight Pin R=Right Pin T=SMT Pin
Total pin number: XX=06-64Pin
1=Single layer 2=Double layer

Female Header Series

KLS1-208C Female Header 1.27mm(0.050")With positioning

Electrical Characteristics:

Current Rating:1 AMP
Insulator Resistance: 5000MΩmin. at DC 500V
Contact Resistance: 20mΩmax. at DC 100mA
Operating Temperature: -45°C~+105°C

Material:

Housing:30% Glass filled PBT UL94V-0
Contacts: Brass
Plating: Gold plated:0.8u″ over 50u″ nickel

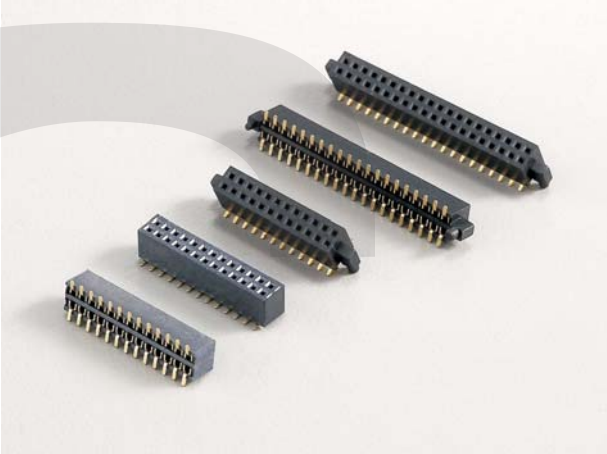

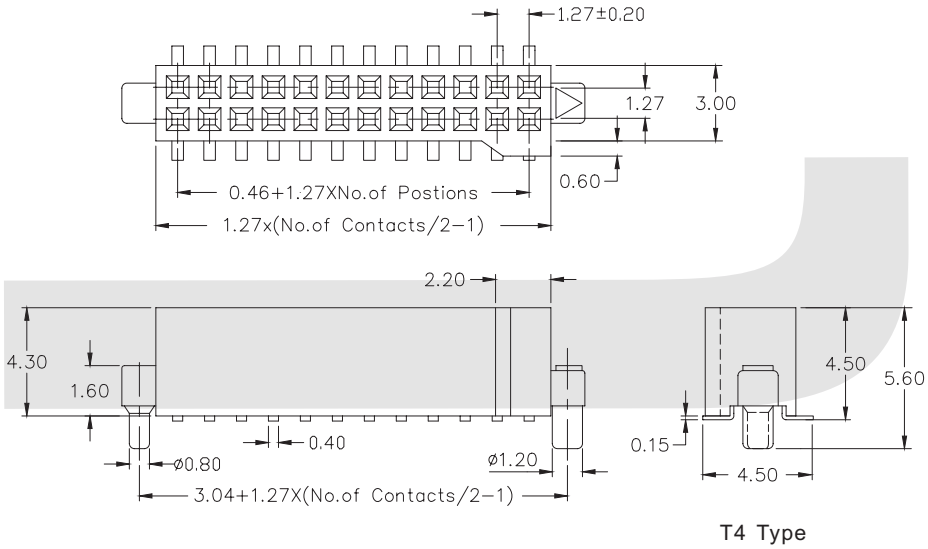

T4 Type

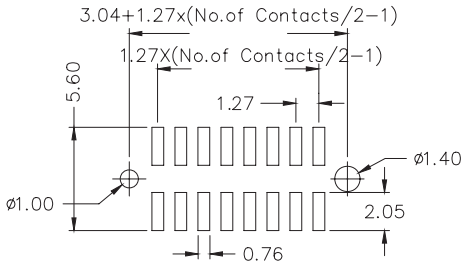

Recommended P.C.Board Layout

ORDER INFORMATION

Product No.: KLS1-208C-4.3-1-XX-T4

Pos. No.
Female Header 1.27mm Series
Height: 4.3mm
Tail Style: S=Straight Pin R=Right Pin T=SMT Pin
Total pin number: XX=06-64Pin
1=Single layer 2=Double layer

Female Header Series

KLS1-208D Female Header 1.27x2.54mm

Electrical Characteristics:

Current Rating:1 AMP
Insulator Resistance: 5000MΩmin. at DC 500V
Contact Resistance: 20mΩmax. at DC 100mA
Operating Temperature: -45°C~+105°C

Material:

Housing:30% Glass filled PBT UL94V-0
Contacts: Brass
Plating: Gold plated:0.8u″ over 50u″ nickel

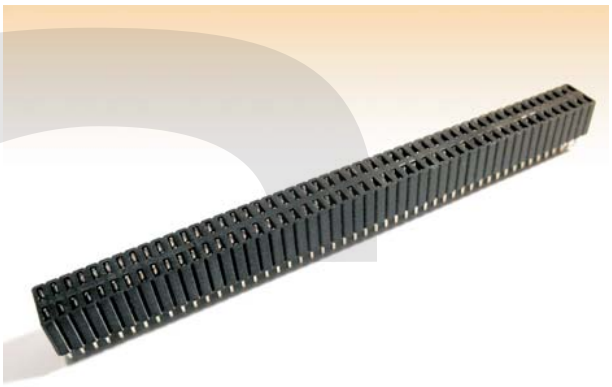

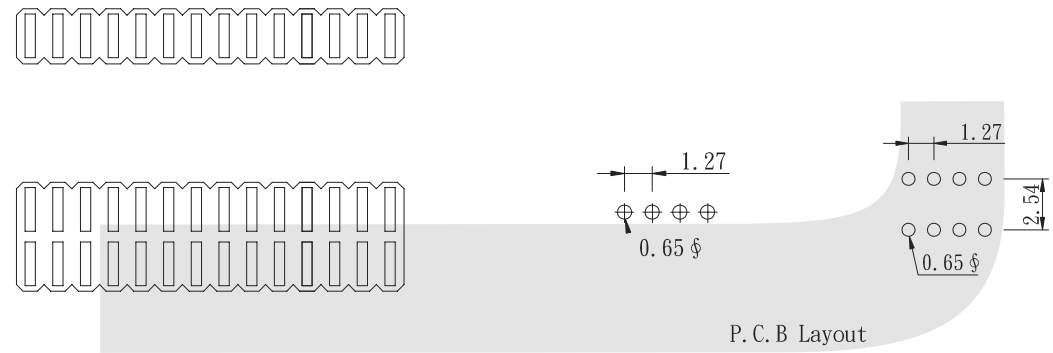

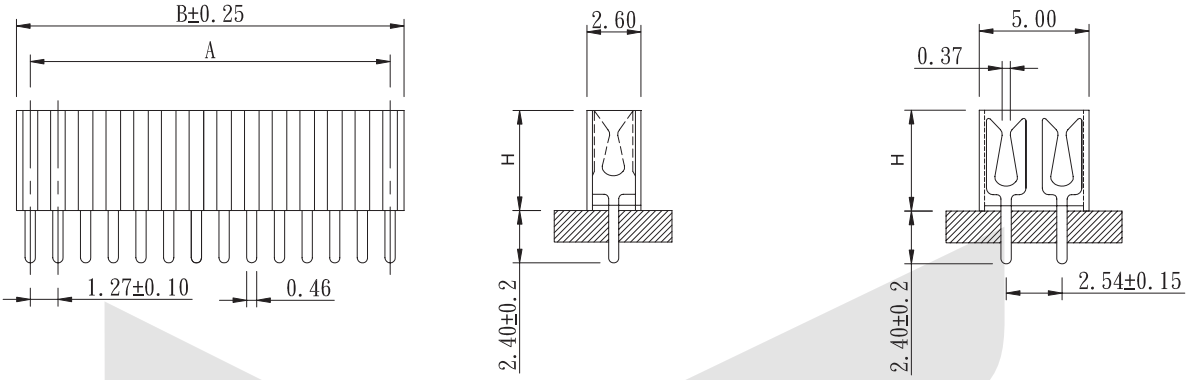

ORDER INFORMATION

Product No.: KLS1-208D-4.6-2-XX-S

Pos. No.
Female Header 1.27x2.54mm Series
Height: 4.6mm、8.5mm

Tail Style: S=Straight Pin T=SMT Pin
Total pin number: XX=06-64Pin
1-Single layer 2=Double layer

Female Header Series

KLS1-208D Female Header 1.27x2.54mm With post SMT Type

Electrical Characteristics:

Current Rating:1 AMP
Insulator Resistance: 5000MΩmin. at DC 500V
Contact Resistance: 20mΩmax. at DC 100mA
Operating Temperature: -45°C~+105°C

Material:

Housing:30% Glass filled PBT UL94V-0
Contacts: Brass
Plating: Gold plated:0.8u″ over 50u″ nickel

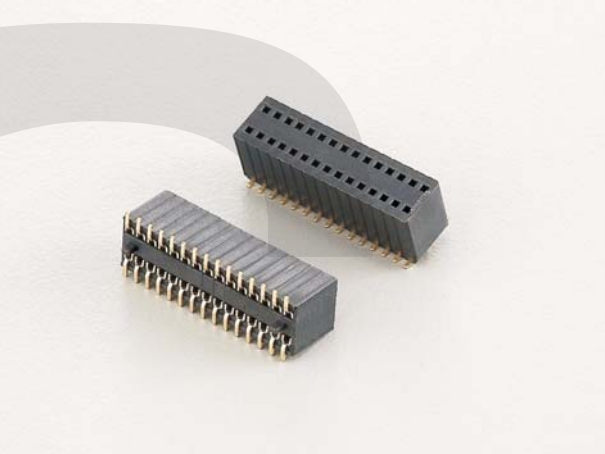

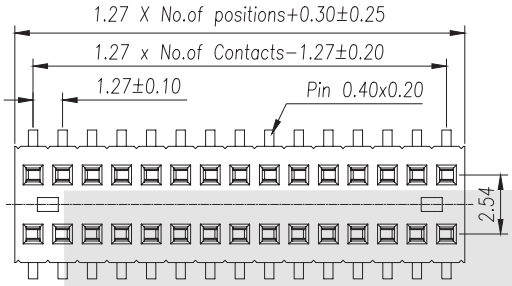

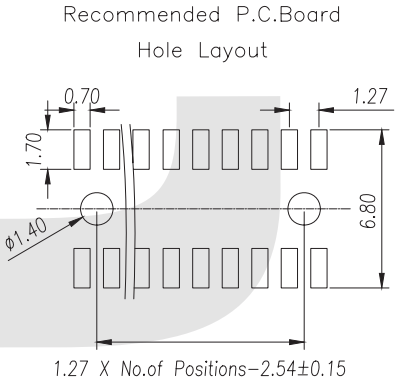

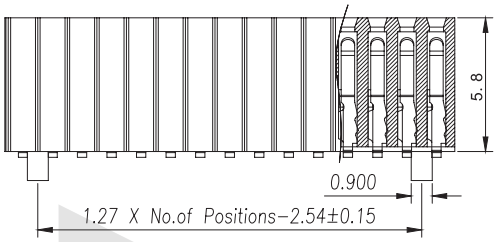

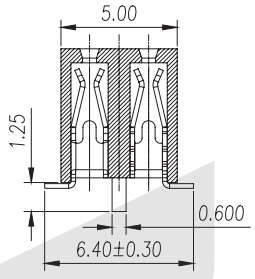

ORDER INFORMATION

Product No.: KLS1-208D-5.8-2-XX-T

Pos. No.
Female Header 1.27x2.54mm Series
Height:
Tail Style: S=Straight Pin T=SMT Pin
Total pin number: XX=06-64Pin
2=Double layer

Female Header Series

KLS1-208B Female Header 2.00mm(0.079") Type

I

Electrical Characteristics:

Current Rating:1 AMP
Insulator Resistance: 5000MΩmin. at DC 500V
Contact Resistance: 20mΩmax. at DC 100mA
Operating Temperature: -45ºC~+105ºC

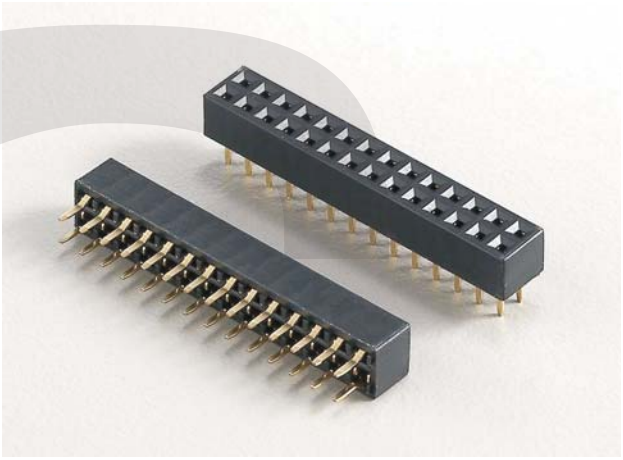

Material:

Housing:30% Glass filled PBT UL94V-0
Contacts: Phosphor Bronze
Plating: Gold plated: 0.8u″ over 50u″ nickel

Features:

* Available in both straight and right angle.
* NOW available in surface mount.
* Tuming fork contacts offer lower cost for competitive market.

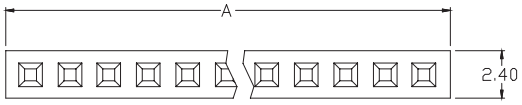

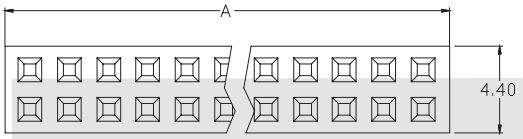

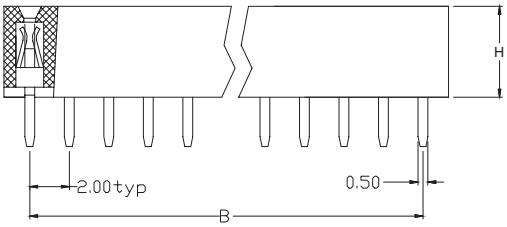

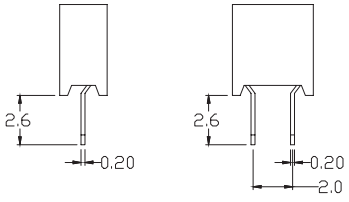

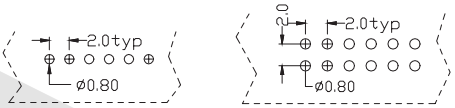

P. C. B Layout

Position	2 Thru 80
Dimension	
A 0.20	2.00 X No.of Positions+0.4
B 0.15	2.00 X No.of Positions-2.00

ORDER INFORMATION

Product No.: KLS1-208B-4.6-1-XX-S

Pos. No.
Female Header 2.00mm Type
Height: 4.0mm、4.3mm、4.6mm
1=Single layer 2=Double layer
Total pin number: XX=02-80Pin
Tail Style: S=Straight Pin R=Right Pin T=SMT Pin

Female Header Series

KLS1-208B Female Header 2.00mm(0.079") Type

Electrical Characteristics:

Current Rating:1 AMP
Insulator Resistance: 5000MΩmin. at DC 500V
Contact Resistance: 20mΩmax. at DC 100mA
Operating Temperature: -45ºC~+105ºC

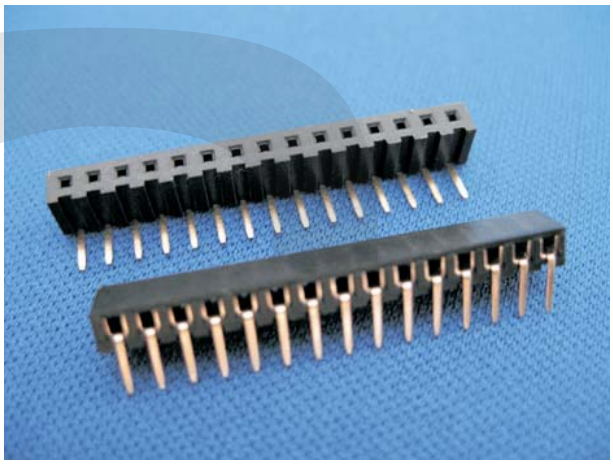

Material:

Housing:30% Glass filled PBT UL94V-0
Contacts: Phosphor Bronze
Plating: Gold plated: 0.8u″ over 50u″ nickel

Features:

* Available in both straight and right angle.
* NOW available in surface mount.
* Tuming fork contacts offer lower cost for competitive market.

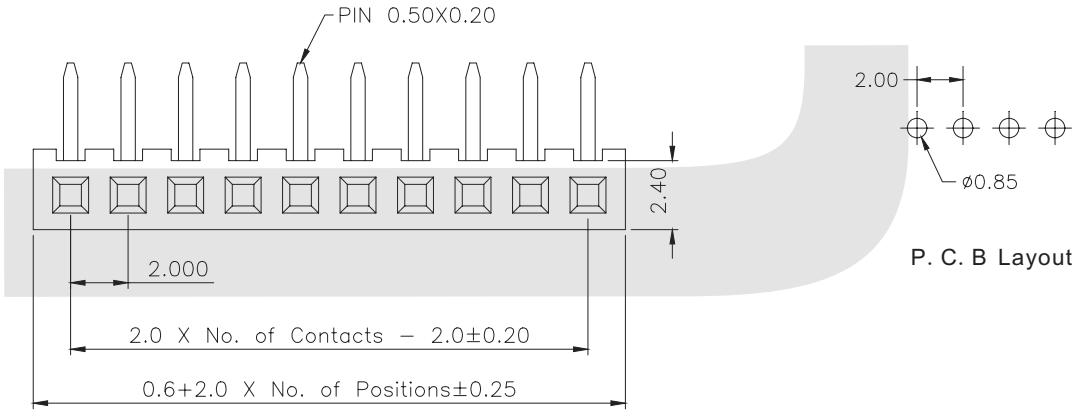

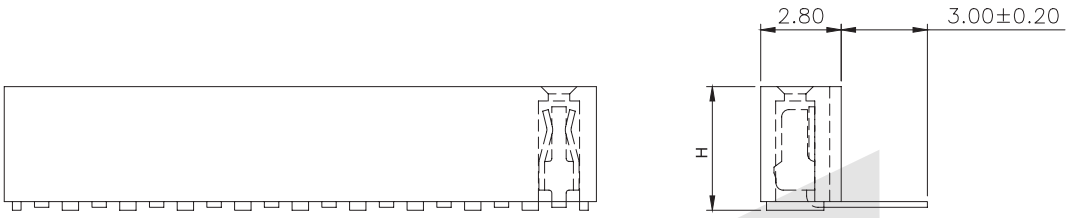

ORDER INFORMATION

Product No.: KLS1-208B-4.6-1-XX-R

Pos. No.
Female Header 2.00mm Type
Height: 4.0mm、4.3mm、4.6mm
1=Single layer 2=Double layer
Total pin number: XX=01-40Pin
Tail Style: S=Straight Pin R=Right Pin T=SMT Pin

I

Female Header Series

KLS1-208B Female Header 2.00mm(0.079") Type

Electrical Characteristics:

Current Rating:1 AMP
Insulator Resistance: 5000MΩmin. at DC 500V
Contact Resistance: 20mΩmax. at DC 100mA
Operating Temperature: -45°C~+105°C

Material:

Housing:30% Glass filled PBT UL94V-0
Contacts: Phosphor Bronze
Plating: Gold plated: 0.8u″ over 50u″ nickel

Features:

* Available in both straight and right angle.
* NOW available in surface mount.
* Tuming fork contacts offer lower cost for competitive market.

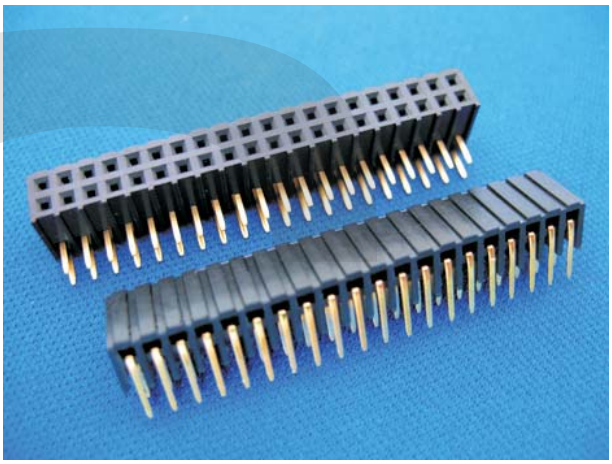

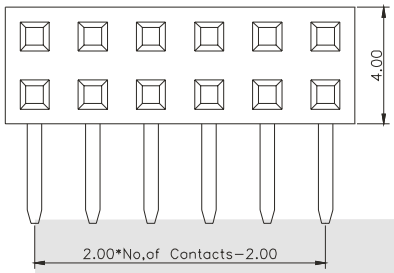

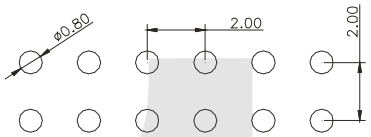

P.C.B LAYOUT

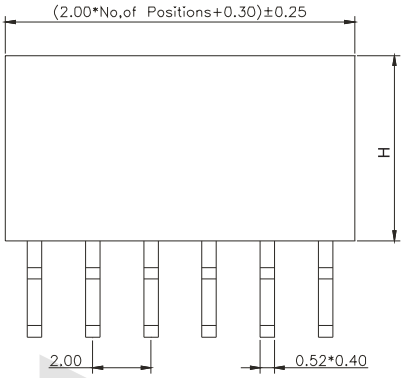

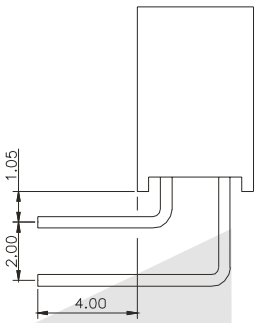

ORDER INFORMATION

Product No.: KLS1-208B-4.6-2-XX-R

Pos. No.
Female Header 2.00mm Type
Height: 4.0mm、4.3mm、4.6mm
Tail Style: S=Straight Pin R=Right Pin T=SMT Pin
Total pin number: XX=02-80Pin
1=Single layer 2=Double layer

Female Header Series

KLS1-208B Female Header 2.00mm(0.079") Type

Electrical Characteristics:

Current Rating:1 AMP
Insulator Resistance: 5000MΩmin. at DC 500V
Contact Resistance: 20mΩmax. at DC 100mA
Operating Temperature: -45°C~+105°C

Material:

Housing:30% Glass filled PBT UL94V-0
Contacts: Phosphor Bronze
Plating: Gold plated: 0.8u″ over 50u″ nickel

Features:

* Available in both straight and right angle.
* NOW available in surface mount.
* Tuming fork contacts offer lower cost for competitive market.

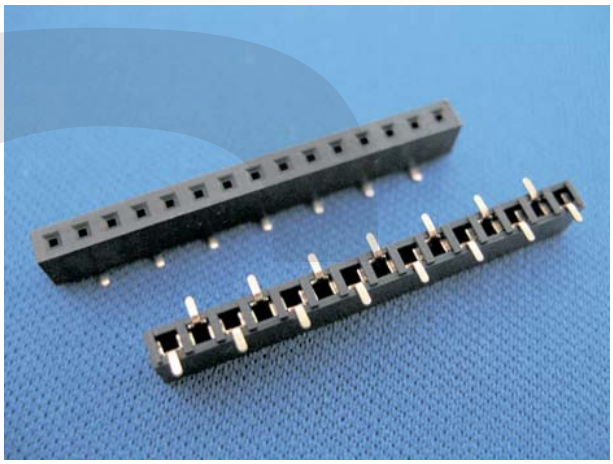

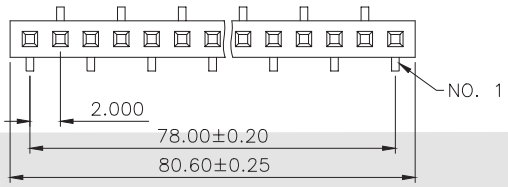

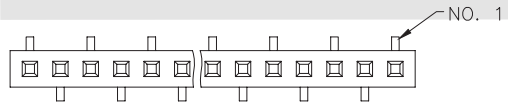

RECOMMENDED P.C.B LAYOUT

T1 Type

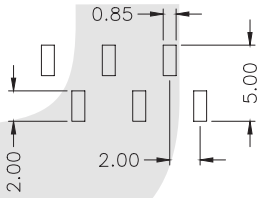

T2 Type

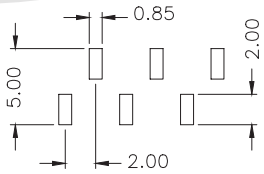

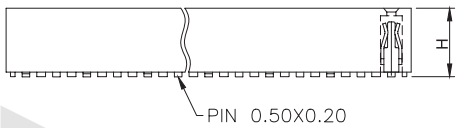

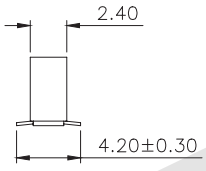

ORDER INFORMATION

Product No.: KLS1-208B-4.6-1-XX-T 1

Pos. No.
Female Header 2.00mm Type
Height: 4.0mm、4.3mm、4.6mm
1=Single layer 2=Double layer
Total pin number: XX=01-40Pin
Tail Style: S=Straight Pin R=Right Pin T=SMT Pin
SMT Pin Type

I

Female Header Series

KLS1-208B Female Header 2.00mm(0.079") Type

Electrical Characteristics:
Current Rating:1 AMP
Insulator Resistance: 5000MΩmin. at DC 500V
Contact Resistance: 20mΩmax. at DC 100mA
Operating Temperature: -45°C~+105°C

Material:
Housing:30% Glass filled PBT UL94V-0
Contacts: Phosphor Bronze
Plating: Gold plated: 0.8u″ over 50u″ nickel

Features:
* Available in both straight and right angle.
* NOW available in surface mount.
* Tuming fork contacts offer lower cost for competitive market.

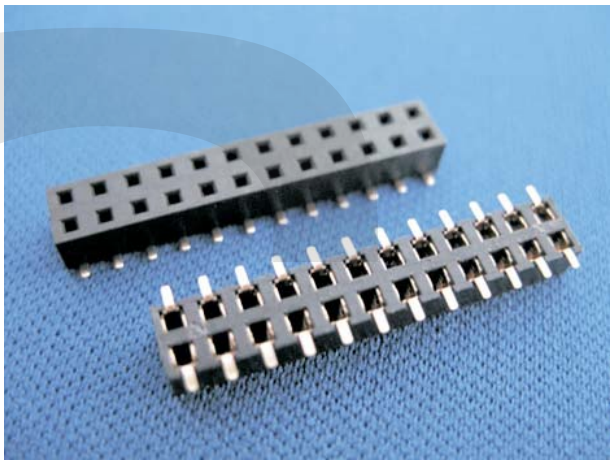

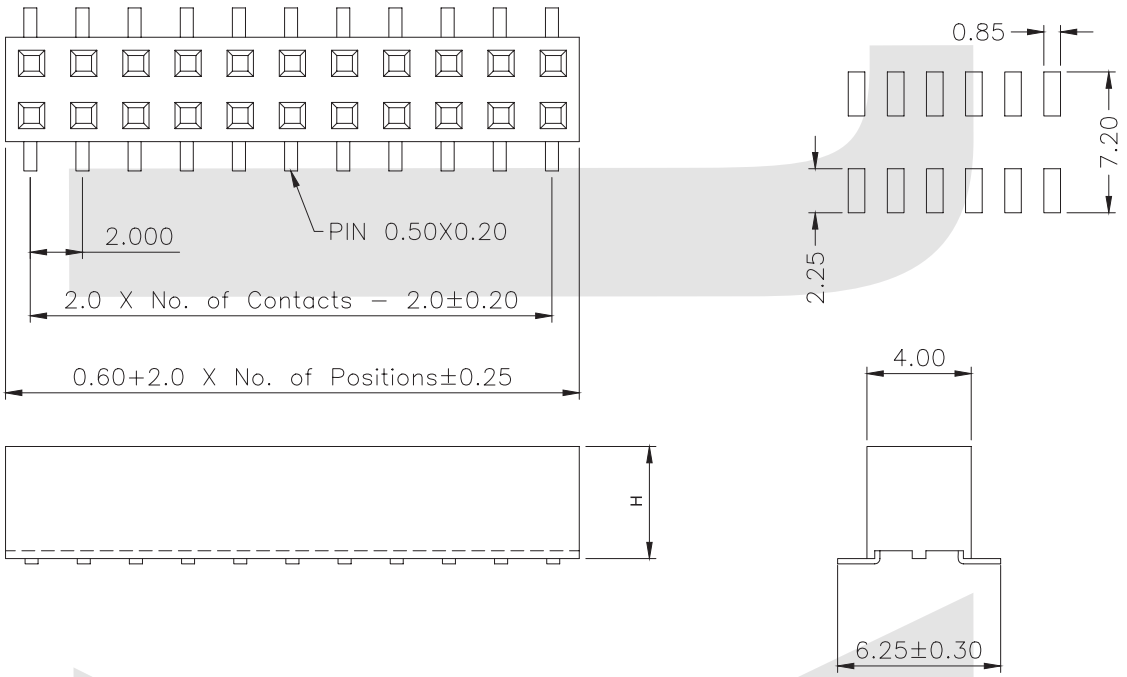

ORDER INFORMATION

Product No.: KLS1-208B-4.6-1-XX-T

Pos. No.
Female Header 2.00mm Type
Height: 4.0mm、4.3mm、4.6mm
Tail Style: S=Straight Pin R=Right Pin T=SMT Pin
Total pin number: XX=02-80Pin
1=Single layer 2=Double layer

Female Header Series

KLS1-208B Female Header 2.00mm(0.079") Type

Electrical Characteristics:
Current Rating:1 AMP
Insulator Resistance: 5000MΩmin. at DC 500V
Contact Resistance: 20mΩmax. at DC 100mA
Operating Temperature: -45ºC~+105ºC

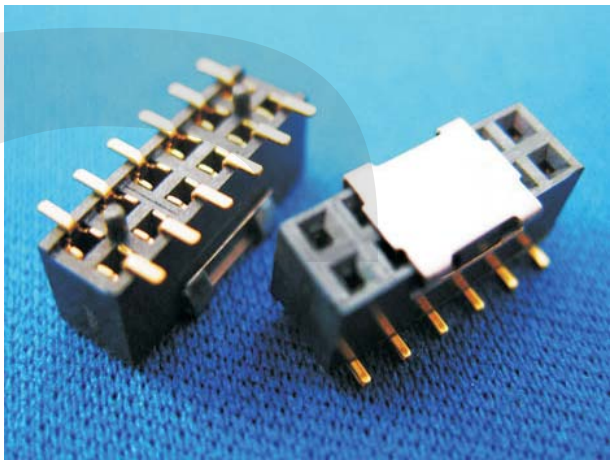

Material:
Housing:30% Glass filled PBT UL94V-0
Contacts: Phosphor Bronze
Plating: Gold plated: 0.8u″ over 50u″ nickel

Features:
* Available in both straight and right angle.
* NOW available in surface mount.
* Tuming fork contacts offer lower cost for competitive market.

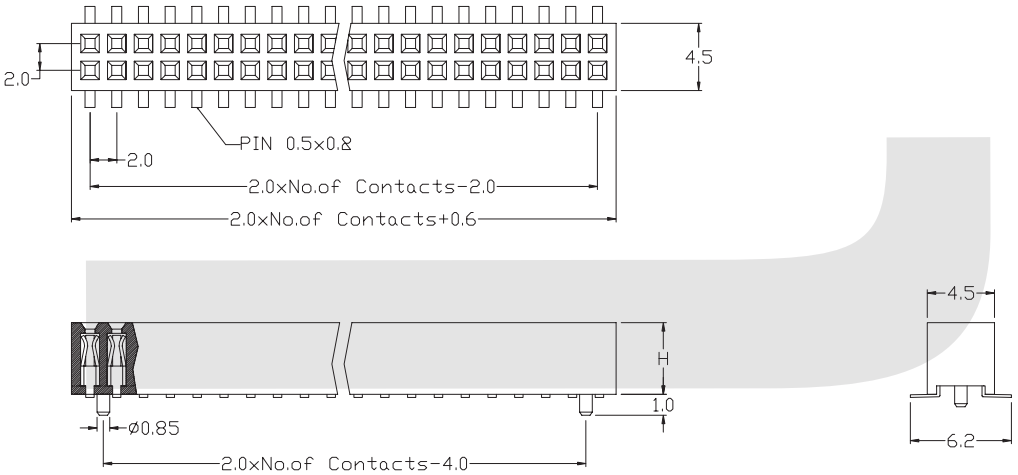

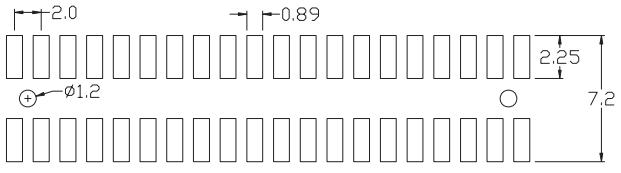

PCB Layout

ORDER INFORMATION

Product No.: KLS1-208B-4.6-2-XX-T3

Pos. No.
Female Header 2.00mm Type
Height: 4.0mm、4.3mm、4.6mm
2=Double layer
Total pin number: XX=02-80Pin
Tail Style: S=Straight Pin R=Right Pin T=SMT Pin

Female Header Series

KLS1-208B-6. 35 Female Header 2.00mm(0.079") Type

Electrical Characteristics:

Current Rating:1 AMP
Insulator Resistance: 5000MΩmin. at DC 500V
Contact Resistance: 20mΩmax. at DC 100mA
Operating Temperature: -45ºC~+105ºC

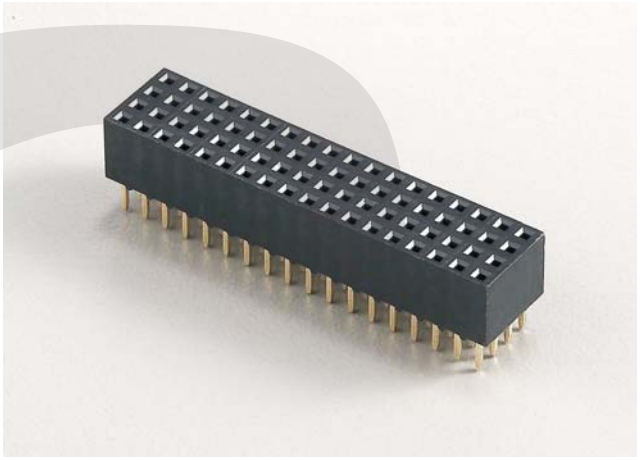

Material:

Housing:30% Glass filled PBT UL94V-0
Contacts: Phosphor Bronze
Plating: Gold plated: 0.8u″ over 50u″ nickel

Features:

* Available in both straight and right angle.
* NOW available in surface mount.
* Tuming fork contacts offer lower cost for competitive market.

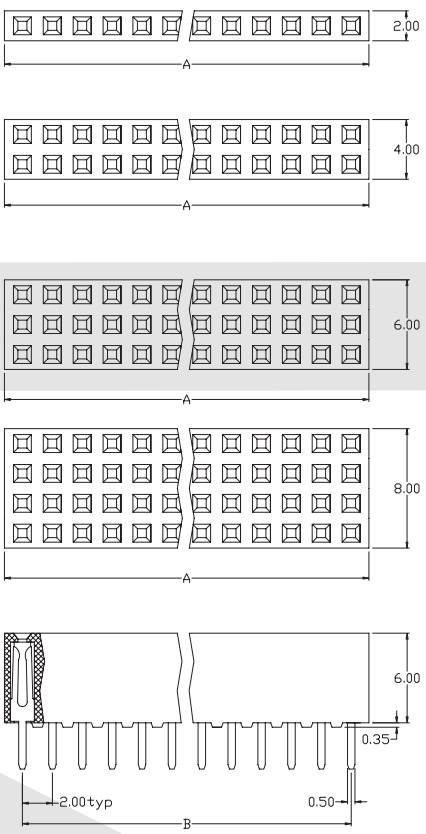

Position / Dimension	2 Thru 120
A±0.20	2.00 X No.of Positions+0.4
B±0.15	2.00 X No.of Positions -2.00

ORDER INFORMATION

Product No.: KLS1-208B-6. 35-1-XX-S

- Pos. No.
- Female Header 2.00mm Type
- Height
- Tail Style: S=Straight Pin R=Right Pin T=SMT Pin
- Total pin number: XX=02-80Pin
- 1=Single layer 2=Double layer 3=Three layer 4=Four layer

Female Header Series

KLS1-208B-6. 35 Female Header 2.00mm(0.079 ") Type

Electrical Characteristics:

Current Rating:1 AMP
Insulator Resistance: 5000MΩmin. at DC 500V
Contact Resistance: 20mΩmax. at DC 100mA
Operating Temperature: -45ºC~+105ºC

Material:

Housing:30% Glass filled PBT UL94V-0
Contacts: Phosphor Bronze
Plating: Gold plated: 0.8u″ over 50u″ nickel

Features:

* Available in both straight and right angle.
* NOW available in surface mount.
* Tuming fork contacts offer lower cost for competitive market.

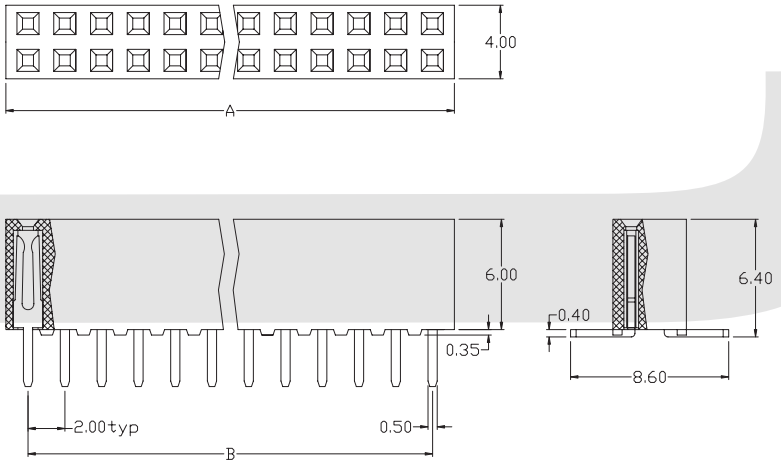

Position / Dimension	2 Thru 120
A±0.20	2.00 X No.of Positions+0.4
B±0.15	2.00 X No.of Positions -2.00

ORDER INFORMATION

Product No.: KLS1-208B-6. 35-2-XX-T

Pos. No.
Female Header 2.00mm Type
Height
Tail Style: S=Straight Pin R=Right Pin T=SMT Pin
Total pin number: XX=02-80Pin
1=Single layer 2=Double layer 3=Three layer 4=Four layer

Female Header Series

KLS1-208Y FEMALE HEADER 2.54mm-high 5.7mm（0.100″）

Electrical Characteristics:

Current Rating:1 AMP
Insulator Resistance: 5000MΩmin. at DC 500V
Contact Resistance: 20mΩmax. at DC 100mA
Operating Temperature: -45ºC~+105ºC

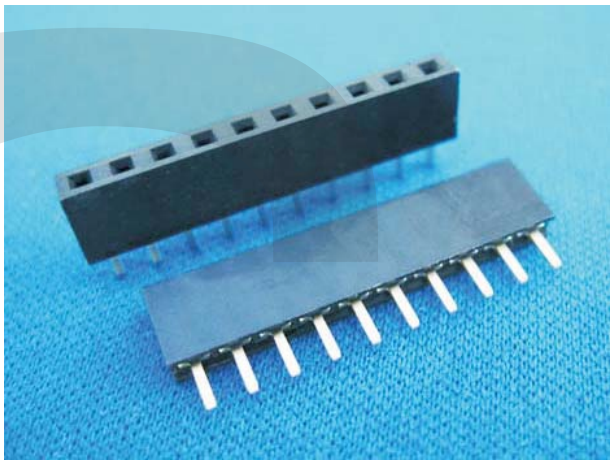

Material:

Housing:30% Glass filled PBT UL94V-0
Contacts: Brass or Phosphor Bronze
Plating: Gold plated: 0.8u″ over 50u″ nickel

Features:

* Available in both straight and right angle.
*Tuming fork contacts offer lower cost for competitive market.

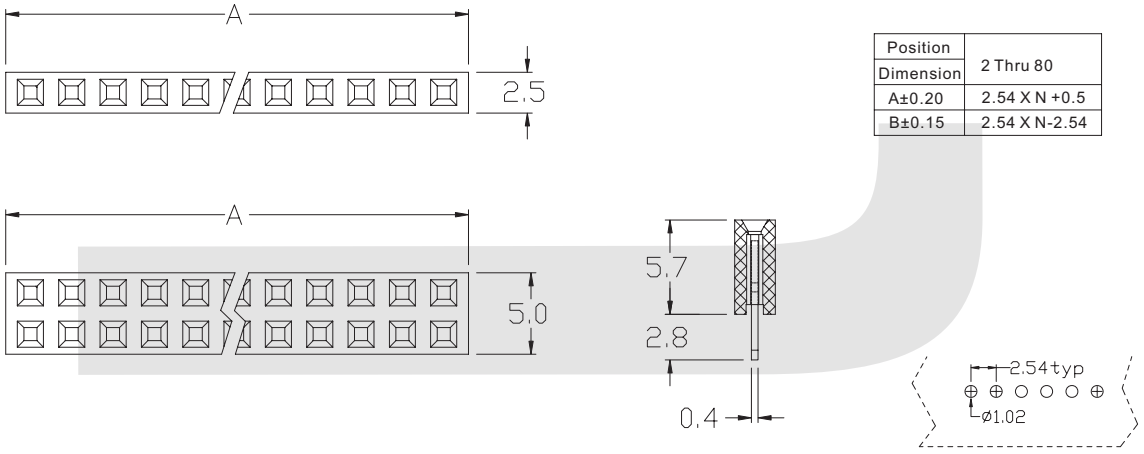

Position	2 Thru 80
Dimension	
A±0.20	2.54 X N +0.5
B±0.15	2.54 X N-2.54

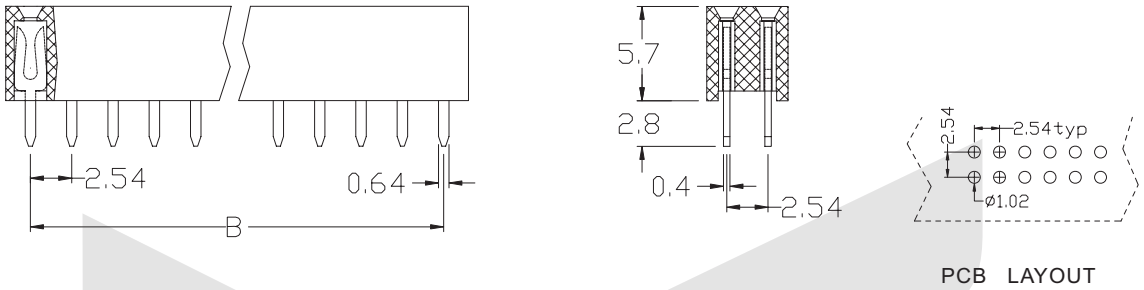

PCB LAYOUT

ORDER INFORMATION

Product No.: KLS1-208Y-5.7-1-XX-S

Pos. No.
Female Header 2.54mm Series
High: 5.0mm、5.7mm
1=Single layer 2=Double layer
Total pin number: XX=02-80Pin
Tail Style: S=Straight Pin R=Right Pin T=SMT Pin

Female Header Series

KLS1-208Y FEMALE HEADER 2.54mm-high 5.7mm（0.100″）

Electrical Characteristics:

Current Rating:1 AMP
Insulator Resistance: 5000MΩmin. at DC 500V
Contact Resistance: 20mΩmax. at DC 100mA
Operating Temperature: -45°C~+105°C

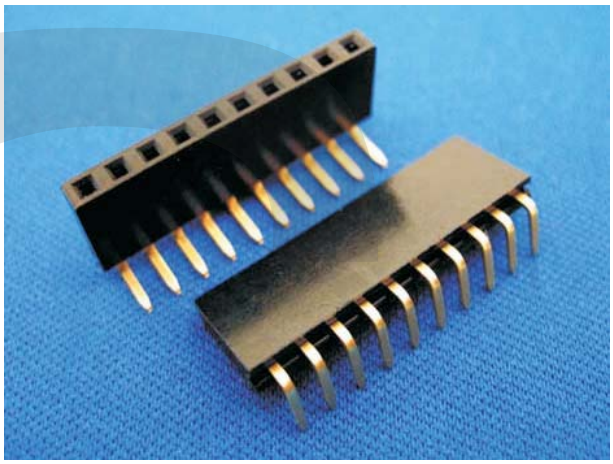

Material:

Housing:30% Glass filled PBT UL94V-0
Contacts: Brass or Phosphor Bronze
Plating: Gold plated: 0.8u″ over 50u″ nickel

Features:

* Available in both straight and right angle.
*Tuming fork contacts offer lower cost for competitive market.

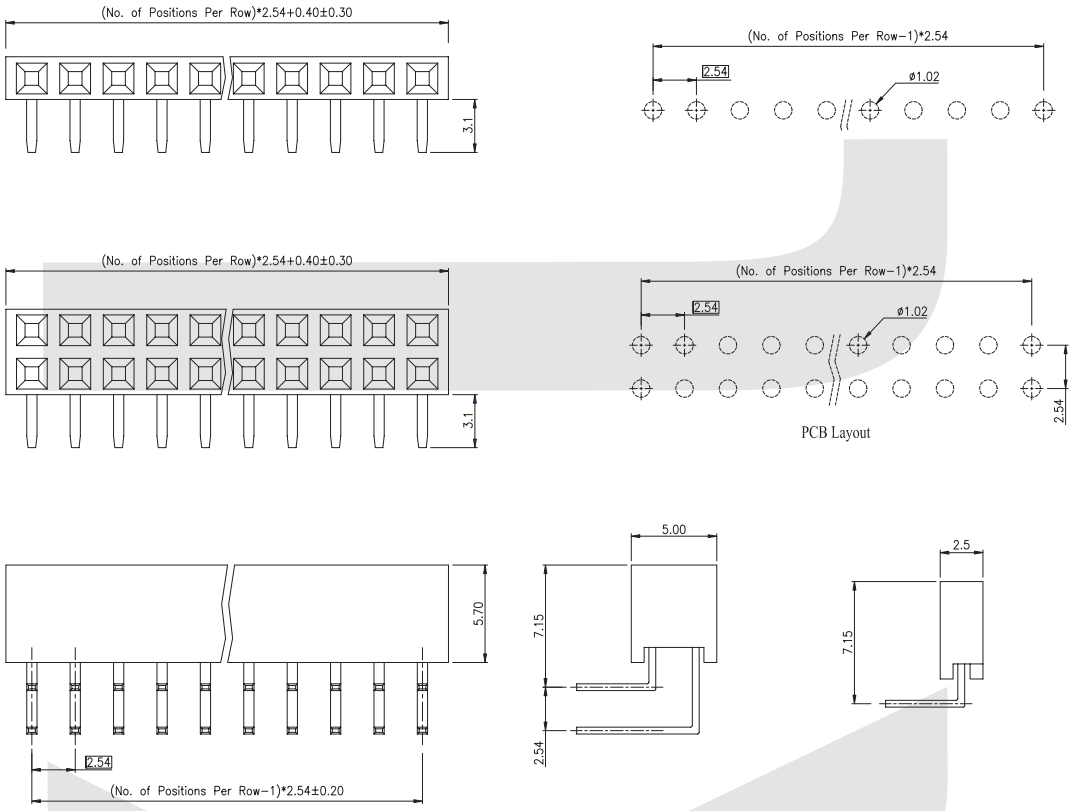

ORDER INFORMATION

Product No.: KLS1-208Y-5.7-1-XX-R

Pos. No.
Female Header 2.54mm Series
High: 5.0mm、5.7mm
1=Single layer 2=Double layer
Total pin number: XX=02-80Pin
Tail Style: S=Straight Pin R=Right Pin T=SMT Pin

Female Header Series

KLS1-208Y FEMALE HEADER 2.54mm-high 5.7mm（0.100″）

Electrical Characteristics:

Current Rating:1 AMP
Insulator Resistance: 5000MΩmin. at DC 500V
Contact Resistance: 20mΩmax. at DC 100mA
Operating Temperature: -45ºC~+105ºC

Material:

Housing:30% Glass filled PBT UL94V-0
Contacts: Brass or Phosphor Bronze
Plating: Gold plated: 0.8u″ over 50u″ nickel

Features:

* Available in both straight and right angle.
*Tuming fork contacts offer lower cost for competitive market.



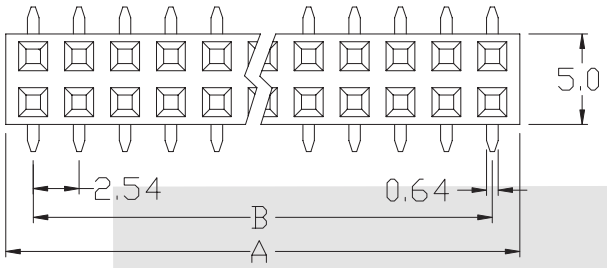

Position	2 Thru 80
Dimension	
A±0.20	2.54 X N +0.5
B±0.15	2.54 X N-2.54

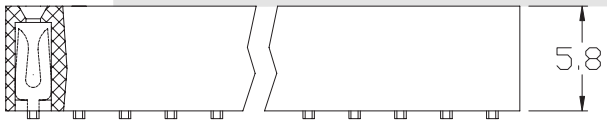

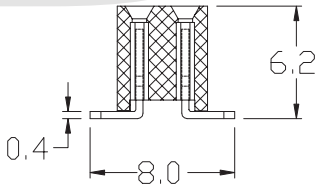

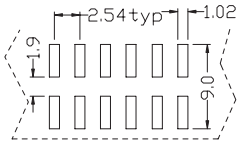

PCB LAYOUT

ORDER INFORMATION

Product No.: KLS1-208Y-5.7-2-XX-T

Pos. No.
Female Header 2.54mm Series
High: 5.0mm、 5.7mm
Tail Style: S=Straight Pin R=Right Pin T=SMT Pin
Total pin number: XX=02-80Pin
1=Single layer 2=Double layer

Female Header Series

KLS1-208Y FEMALE HEADER 2.54mm-high 5.0mm（0.100″）

Electrical Characteristics:

Current Rating:1 AMP
Insulator Resistance: 5000MΩmin. at DC 500V
Contact Resistance: 20mΩmax. at DC 100mA
Operating Temperature: -45ºC~+105ºC

Material:

Housing:30% Glass filled PBT UL94V-0
Contacts: Brass or Phosphor Bronze
Plating: Gold plated: 0.8u″ over 50u″ nickel

Features:

* Available in both straight and right angle.
*Tuming fork contacts offer lower cost for competitive market.

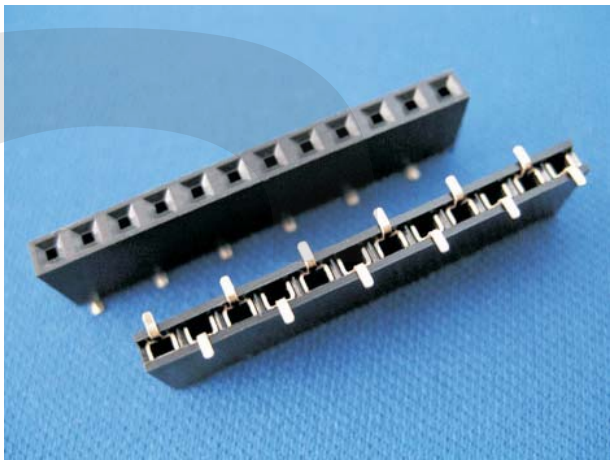

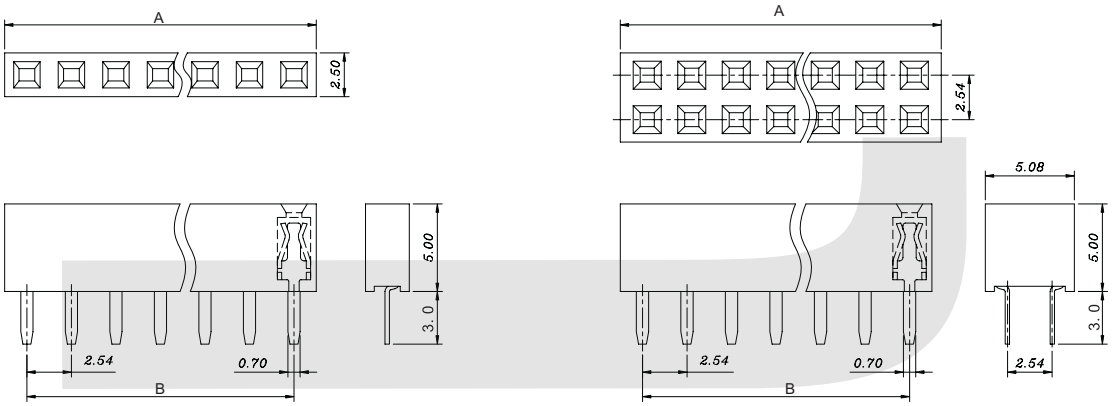

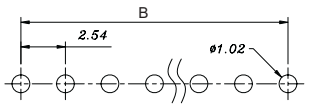

PCB LAYOUT

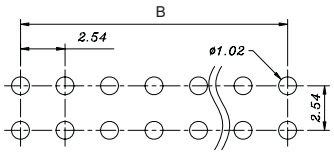

PCB LAYOUT

Position	2 Thru 80
Dimension	
A±0.20	2.54 X N +0.5
B±0.15	2.54 X N-2.54

ORDER INFORMATION

Product No.: KLS1-208Y-5.0-1-XX-S

Pos. No.
Female Header 2.54mm Series
High: 5.0mm、 5.7mm
1=Single layer 2=Double layer
Total pin number: XX=02-80Pin
Tail Style: S=Straight Pin R=Right Pin T=SMT Pin

Female Header Series

KLS1-208Y FEMALE HEADER 2.54mm-high 5.0mm（0.100″）

Electrical Characteristics:

Current Rating:1 AMP
Insulator Resistance: 5000MΩmin. at DC 500V
Contact Resistance: 20mΩmax. at DC 100mA
Operating Temperature: -45ºC~+105ºC

Material:

Housing:30% Glass filled PBT UL94V-0
Contacts: Brass or Phosphor Bronze
Plating: Gold plated: 0.8u″ over 50u″ nickel

Features:

* Available in both straight and right angle.
*Tuming fork contacts offer lower cost for competitive market.

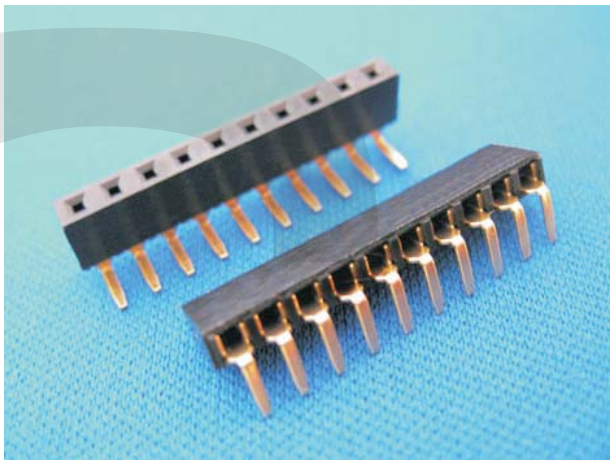

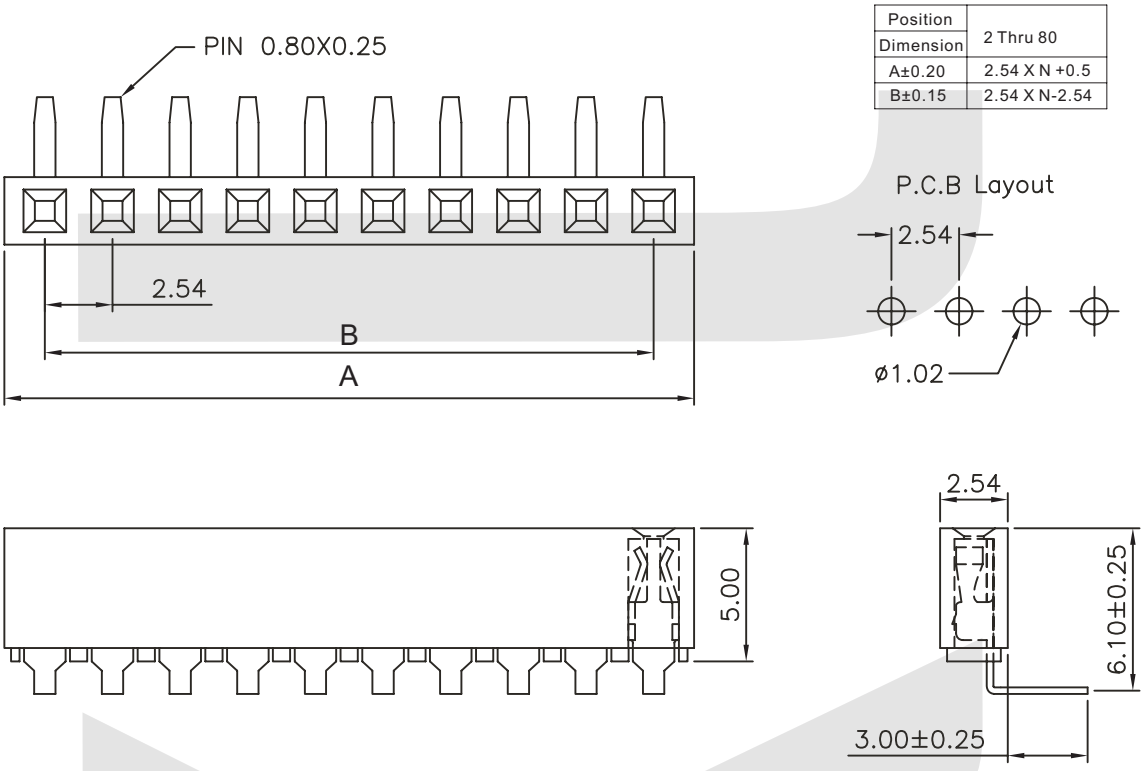

Position	2 Thru 80
Dimension	
A±0.20	2.54 X N +0.5
B±0.15	2.54 X N-2.54

ORDER INFORMATION

Product No.: KLS1-208Y-5.0-1-XX-R

Pos. No.
Female Header 2.54mm Series
High: 5.0mm、 5.7mm
1=Single layer 2=Double layer
Total pin number: XX=02-80Pin
Tail Style: S=Straight Pin R=Right Pin T=SMT Pin

Female Header Series

KLS1-208Y FEMALE HEADER 2.54mm-high 5.0mm (0.100″)

Electrical Characteristics:

Current Rating:1 AMP
Insulator Resistance: 5000MΩmin. at DC 500V
Contact Resistance: 20mΩmax. at DC 100mA
Operating Temperature: -45°C~+105°C

Material:

Housing:30% Glass filled PBT UL94V-0
Contacts: Brass or Phosphor Bronze
Plating: Gold plated: 0.8u″ over 50u″ nickel

Features:

* Available in both straight and right angle.
*Tuming fork contacts offer lower cost for competitive market.

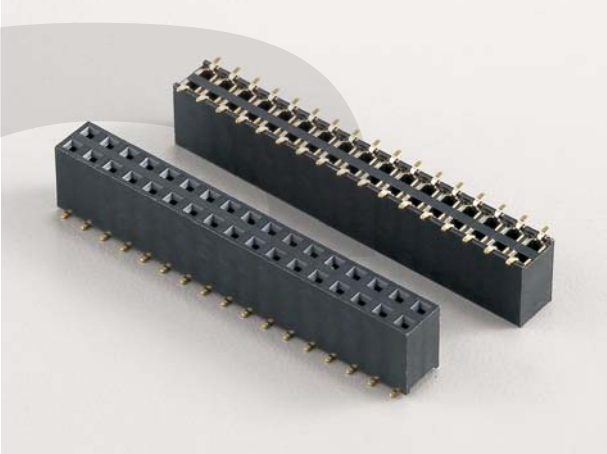

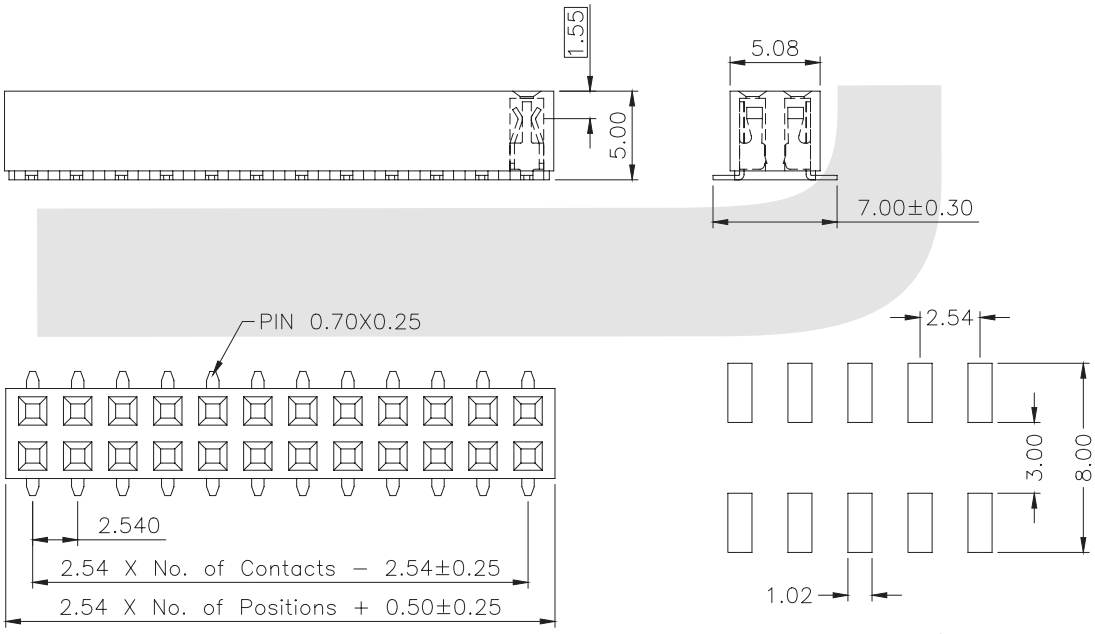

PCB LAYOUT

ORDER INFORMATION

Product No.: KLS1-208Y-5.0-2-XX-T

Pos. No.
Female Header 2.54mm Series
High: 5.0mm、 5.7mm
1=Single layer 2=Double layer
Total pin number: XX=02-80Pin
Tail Style: S=Straight Pin R=Right Pin T=SMT Pin

Female Header Series

KLS1-208 Female Header 2.54mm(0.100″) /High 8.4mm

Electrical Characteristics:

Current Rating:1 AMP
Insulator Resistance: 5000MΩmin. at DC 500V
Contact Resistance: 20mΩmax. at DC 100mA
Operating Temperature: -45ºC~+105ºC

Material:

Housing:30% Glass filled PBT UL94V-0
Contacts: Brass or Phosphor Bronze
Plating:Selective gold plated : gold plated on mating area and nickel plated on wire Cutting area
Gold plated: 0.8u″ over 50u″ nickel

Features:

* Available in straight and right angle.
* Turning fork contacts offer lower cost for competitive market.

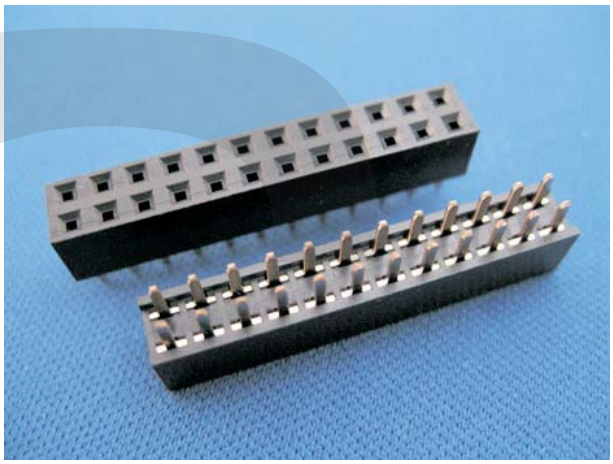

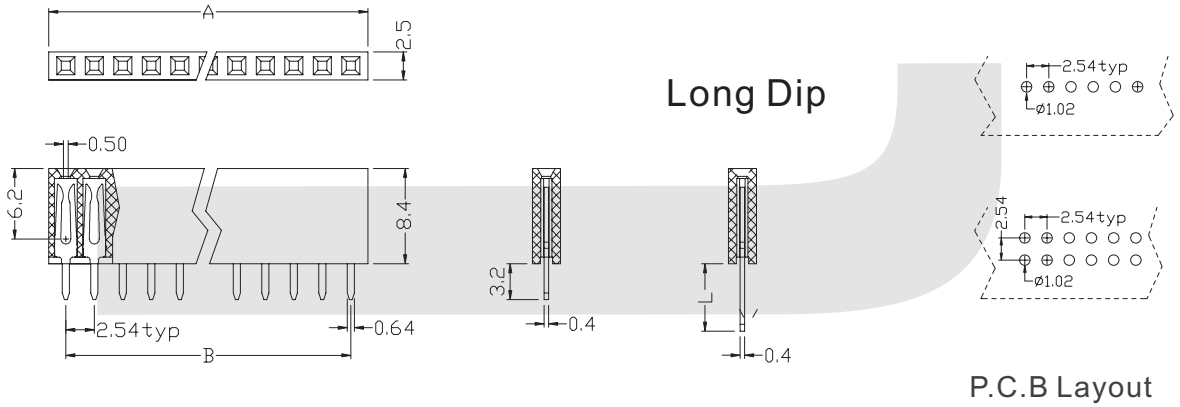

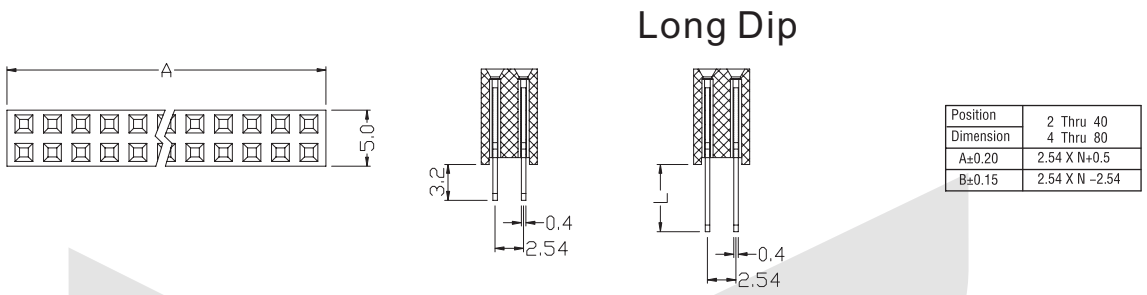

Position	2 Thru 40 4 Thru 80
Dimension	
A±0.20	2.54 X N+0.5
B±0.15	2.54 X N -2.54

ORDER INFORMATION

Product NO.: KLS1-208-1-XX-S

Pos. NO.
2.54mm Female Header -High 8.4mm
1-Single layer 2-Double layer
3-Three layer
Tail Style: S=Straight Pin R=Right Pin T=SMT Pin
Total pin number (No.of 1~80pin)

I

Female Header Series

KLS1-208 Female Header 2.54mm(0.100″) / High 8.4mm

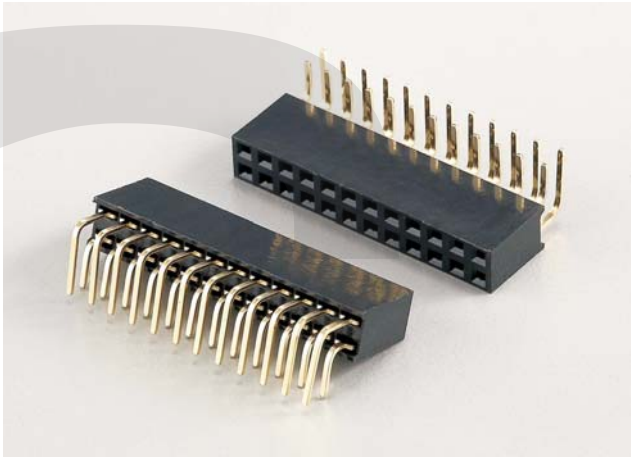

Electrical Characteristics:

Current Rating:1 AMP
Insulator Resistance: 5000MΩmin. at DC 500V
Contact Resistance: 20mΩmax. at DC 100mA
Operating Temperature: -45ºC~+105ºC

Material:

Housing:30% Glass filled PBT UL94V-0
Contacts: Brass or Phosphor Bronze
Plating:Selective gold plated : gold plated on mating area and nickel plated on wire Cutting area
Gold plated: 0.8u″ over 50u″ nickel

Features:

* Available in straight and right angle.
* Turning fork contacts offer lower cost for competitive market.

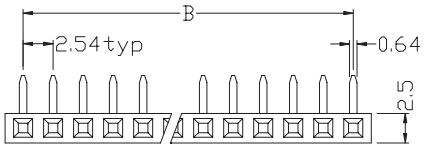

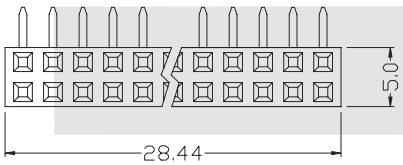

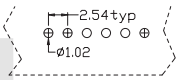

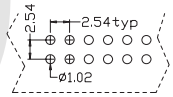

P.C.B Layout

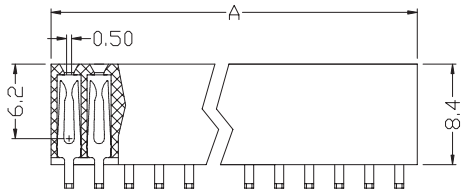

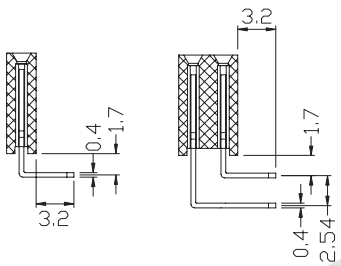

Position	2 Thru 40
Dimension	4 Thru 80
A±0.20	2.54 X N+0.5
B±0.15	2.54 X N -2.54

ORDER INFORMATION

Product NO.: KLS1-208-1-XX-R

Pos. NO.
2.54mm Female Header -High 8.4mm
1-Single layer 2-Double layer
3-Three layer
Total pin number (No.of 1~80pin)
Tail Style: S=Straight Pin R=Right Pin T=SMT Pin

Female Header Series

KLS1-208 Female Header 2.54mm(0.100″) / High 8.4mm

Electrical Characteristics:

Current Rating:1 AMP
Insulator Resistance: 5000MΩmin. at DC 500V
Contact Resistance: 20mΩmax. at DC 100mA
Operating Temperature: -45ºC~+105ºC

Material:

Housing:30% Glass filled PBT UL94V-0
Contacts: Brass or Phosphor Bronze
Plating:Selective gold plated : gold plated on mating area and nickel plated on wire Cutting area
Gold plated: 0.8u″ over 50u″ nickel

Features:

* Available in straight and right angle.
* Turning fork contacts offer lower cost for competitive market.

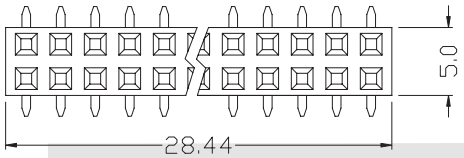

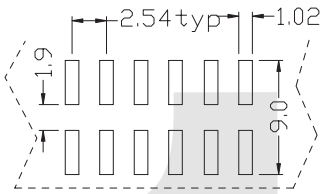

P.C.B Layout

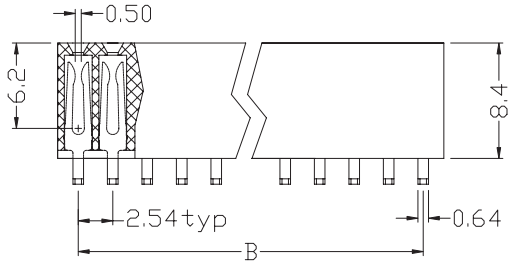

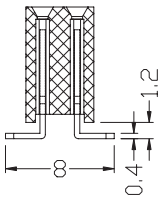

Position	2 Thru 40
Dimension	4 Thru 80
A±0.20	2.54 X N+0.5
B±0.15	2.54 X N -2.54

ORDER INFORMATION

Product NO.: KLS1-208-2-XX-T

Pos. NO.
2.54mm Female Header -High 8.4mm
1-Single layer 2-Double layer
3-Three layer
Tail Style: S=Straight Pin R=Right Pin T=SMT Pin
Total pin number (No.of 2~80pin)

Female Header Series

KLS1-208X Elevated Female Header 2.54mm (0.100″)

Electrical Characteristics:

Current Rating:1 AMP
Insulator Resistance: 5000MΩmin. at DC 500V
Contact Resistance: 20mΩmax. at DC 100mA
Operating Temperature: -45°C~+105°C

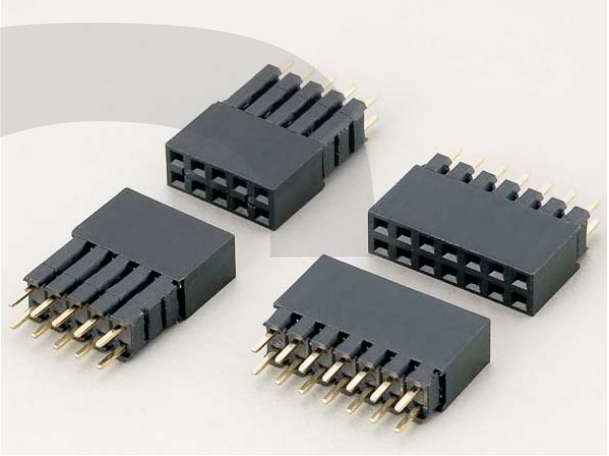

Material:

Housing: 30% Glass filled PBT UL94V-0
Contacts: Brass or Phosphor Bronze
Plating: Selective gold plated: gold plated on mating area and nickel plated on wire cutting area
Gold plated: 0.8u" over 50u" nickel

Features:

* Wide range of board spacing choices.
* Great product flexibility and strength.
* Turning fork contacts offer lower cost for competitive market.

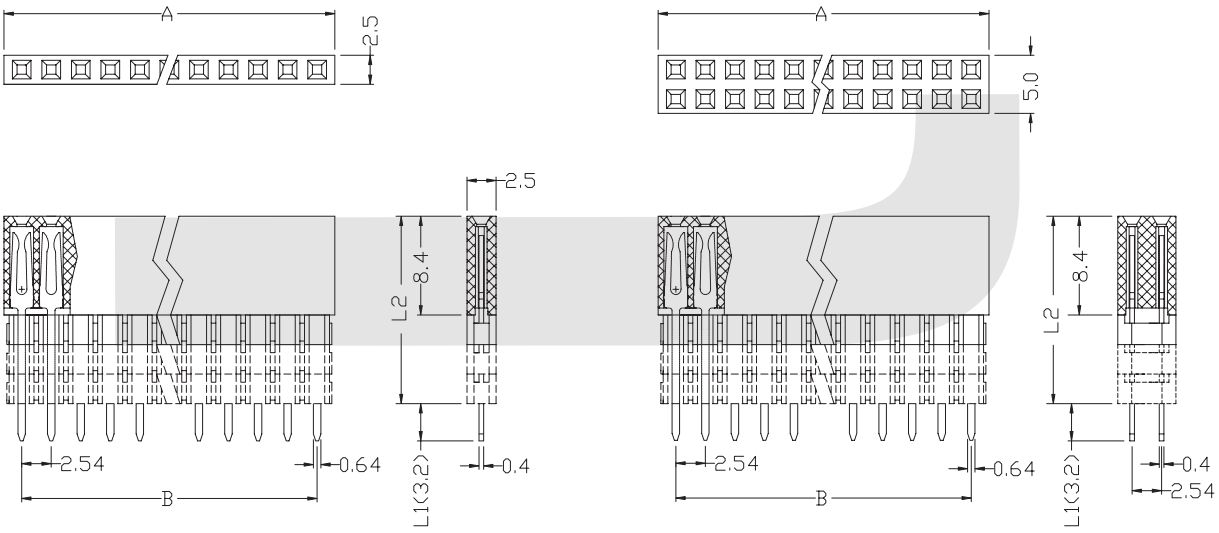

PCB LAYOUT

PCB LAYOUT

Position	2 Thru 80
Dimension	
A 0 .20	2.54 X No.of Positions+0.5
B 0 .15	2.54 X No.of Positions-2.54

ORDER INFORMATION

Product No.: KLS1-208X-1-XX-S-L1*L2

Pos. No.
Elevated Female Header 2.54mm Series
1=Single layer 2=Double layer

L1\L2 Size
Tail Style: S=Straight Pin
Total pin number: XX=02-80Pin

Female Header Series

KLS1-219X FEMALE HEADER 2.54mm With polarizing bump

Electrical Characteristics:

Current Rating:1 AMP
Insulator Resistance: 5000MΩmin. at DC 500V
Contact Resistance: 20mΩmax. at DC 100mA
Operating Temperature: -45ºC~+105ºC

Material:

Housing: 30% Glass filled PBT UL94V-0
Contacts: Brass or Phosphor Bronze
Plating: Selective gold plated: gold plated on mating area and nickel plated on wire cutting area
Gold plated: 0.8u" over 50u" nickel

Features:

* Available in straight and right angle.
* Turning fork contacts offer lower cost for competitive market.



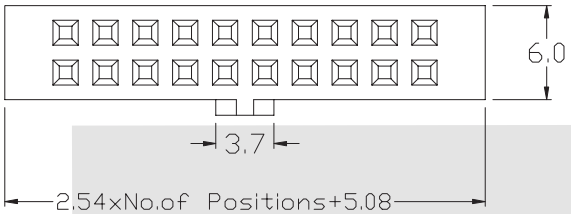

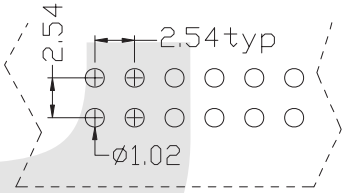

P.C.B Layout

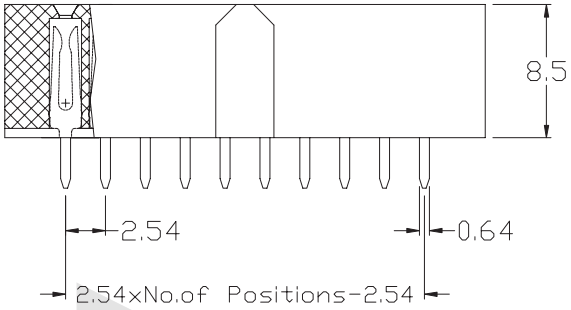

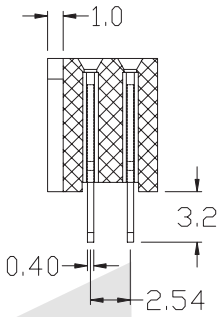

ORDER INFORMATION

Product No.: KLS1-219X-2-XX-S

- Pos. No.
- Female Header 2.54mm With polarizing bump
- 2=Double layer
- Total pin number: XX=02-80Pin
- Tail Style: S=Straight Pin R=Right Pin

Female Header Series

KLS1-219X FEMALE HEADER 2.54mm With polarizing bump

Electrical Characteristics:
Current Rating:1 AMP
Insulator Resistance: 5000MΩmin. at DC 500V
Contact Resistance: 20mΩmax. at DC 100mA
Operating Temperature: -45ºC~+105ºC

Material:
Housing: 30% Glass filled PBT UL94V-0
Contacts: Brass or Phosphor Bronze
Plating: Selective gold plated: gold plated on mating area and nickel plated on wire cutting area
Gold plated: 0.8u" over 50u" nickel

Features:
* Available in straight and right angle.
* Turning fork contacts offer lower cost for competitive market.



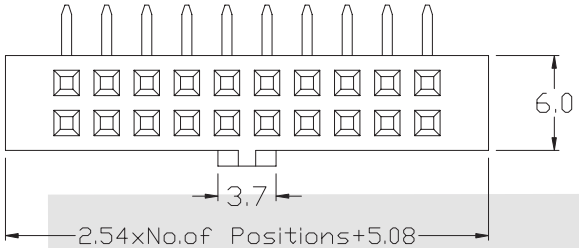

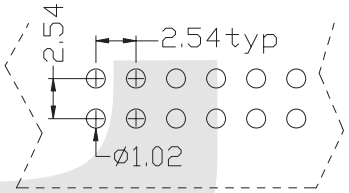

P.C.B Layout

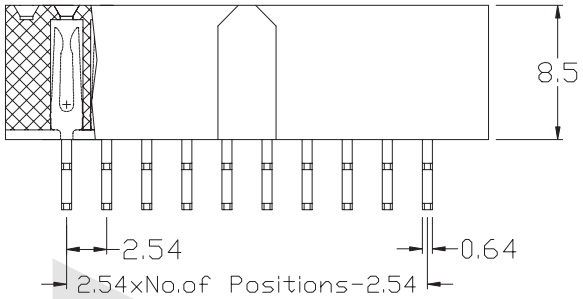

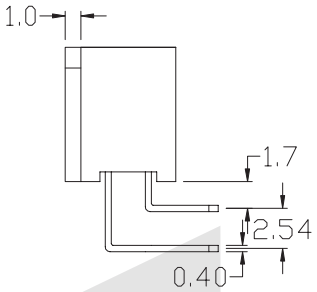

ORDER INFORMATION

Product No.: KLS1-219X-2-XX-R

- Pos. No.
- Female Header 2.54mm With polarizing bump
- 2=Double layer
- Total pin number: XX=02-80Pin
- Tail Style: S=Straight Pin R=Right Pin

Pin Header Series

KIS1-203B 2.00mm Mini Jumper Series

Electrical Specification:

Current Rating: 1 AMP
Insulator Resistance: 5000M Ohm¸min. at DC 500V
Contact Resistance: 20m Ohm¸ max. at DC 100mA
Operating Temperature: -55ºC~+105ºC

Material:

Housing: 30% Glass filled PBT UL94V-0
Contacts: Brass or Phosphor Bronze
Plating: Selective gold plated: gold plated on mating area and nickel plated on wire cutting area
Gold plated: 3u" over 50u" nickel



OPEN

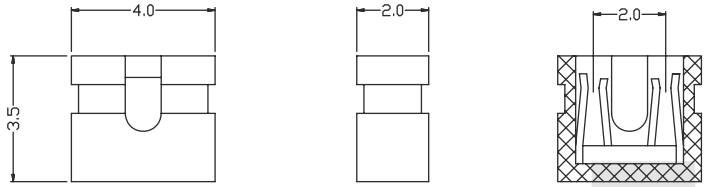

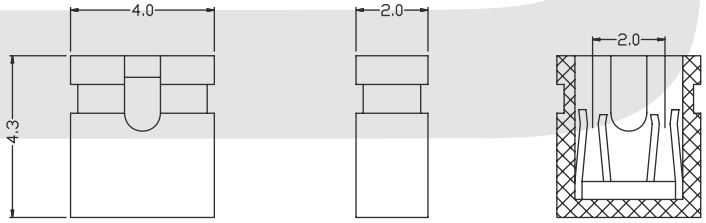

CLOSE

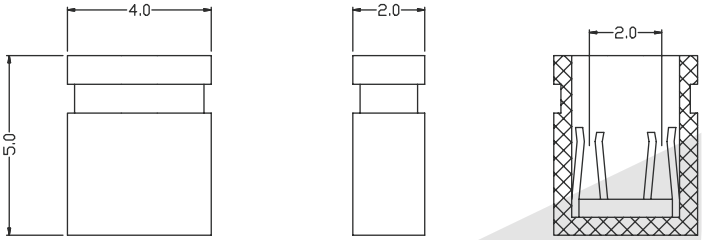

ORDER INFORMATION

Product NO.: KLS1-203 B-C-B-6.0

Pos. NO.
Series No.
Pitch: A=2.54mm B=2.00mm
Housing Type: O-Open C-Close
Color: B- Black R-Red L-Blue G-Green

Height:
Pitch 2.54mm Open Type:4.5mm / 6.0mm / 8.0mm / 13.5mm
Pitch 2.54mm Close Type:6.5mm / 8.5mm

Pitch 2.0mm Open Type:3.5mm / 4.5mm
Pitch 2.0mm Close Type:5.0mm

Pin Header Series

KIS1-203A 2.54mm Mini Jumper Series

Electrical Specification:
Current Rating: 1 AMP
Insulator Resistance: 5000M Ohm¸min. at DC 500V
Contact Resistance: 20m Ohm¸ max. at DC 100mA
Operating Temperature: -55ºC~+105ºC

Material:
Housing: 30% Glass filled PBT UL94V-0
Contacts: Brass or Phosphor Bronze
Plating: Selective gold plated: gold plated on mating area and nickel plated on wire cutting area
Gold plated: 3u" over 50u" nickel



OPEN

H
4.5
6.0
8.0

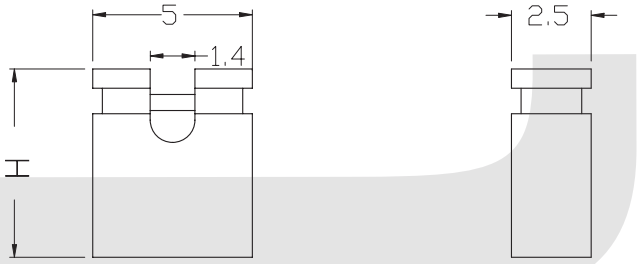

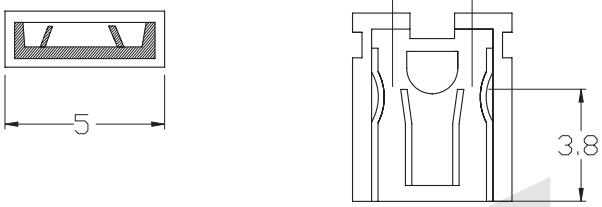

ORDER INFORMATION

Product NO.: KLS1-203 A-O-B-6.0

Pos. NO.
Series No.
Pitch: A=2.54mm B=2.00mm
Housing Type: O-Open C-Close
Color: B- Black R-Red L-Blue G-Green

Height:
Pitch 2.54mm Open Type:4.5mm / 6.0mm / 8.0mm / 13.5mm
Pitch 2.54mm Close Type:6.5mm / 8.5mm

Pitch 2.0mm Open Type:3.5mm / 4.5mm
Pitch 2.0mm Close Type:5.0mm

Pin Header Series

KIS1-203A 2.54mm Mini Jumper Series

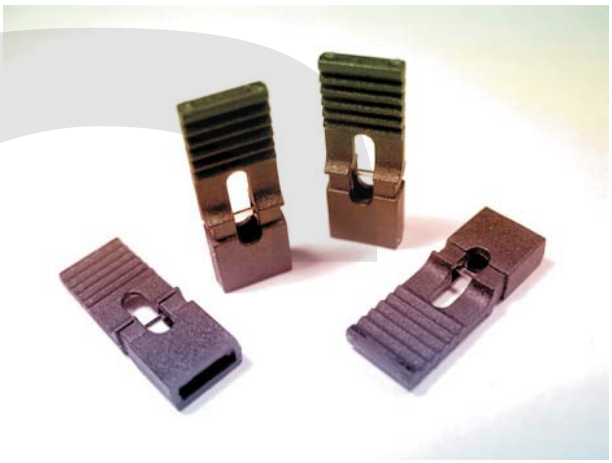

Electrical Specification:

Current Rating: 1 AMP
Insulator Resistance: 5000M Ohm¸min. at DC 500V
Contact Resistance: 20m Ohm¸ max. at DC 100mA
Operating Temperature: -55ºC~+105ºC

Material:

Housing: 30% Glass filled PBT UL94V-0
Contacts: Brass or Phosphor Bronze
Plating: Selective gold plated: gold plated on mating area and nickel plated on wire cutting area
Gold plated: 3u" over 50u" nickel

OPEN

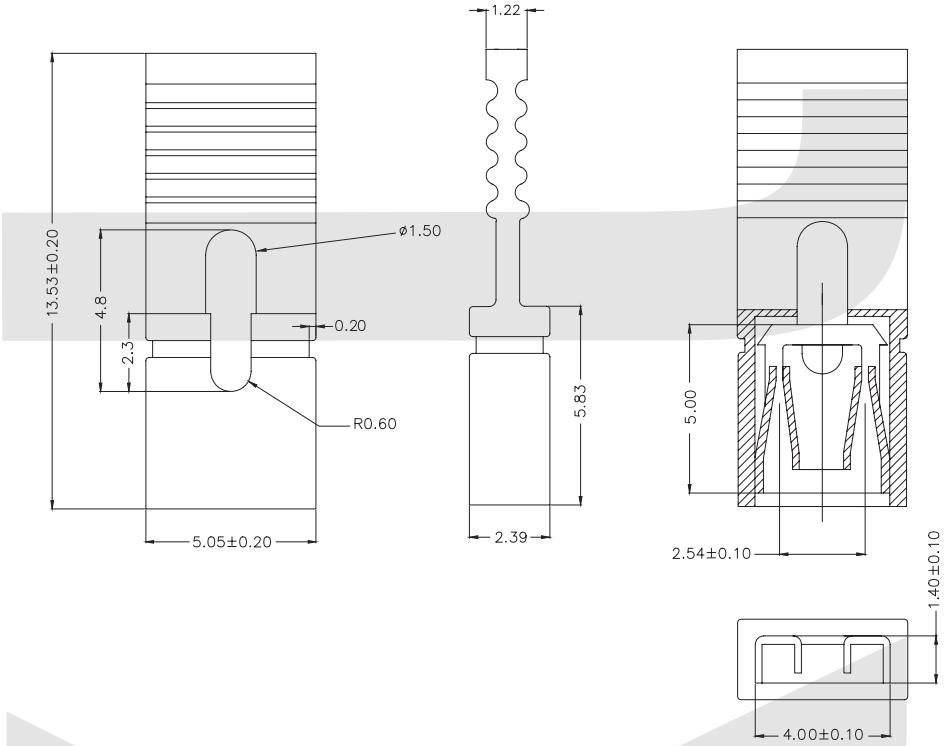

ORDER INFORMATION

Product NO.: KLS1-203 A-O-B-13.5

Pos. NO.
Series No.
Pitch: A=2.54mm B=2.00mm
Housing Type: O-Open C-Close
Color: B- Black R-Red L-Blue G-Green

Height:
Pitch 2.54mm Open Type:4.5mm / 6.0mm / 8.0mm / 13.5mm
Pitch 2.54mm Close Type:6.5mm / 8.5mm

Pitch 2.0mm Open Type:3.5mm / 4.5mm
Pitch 2.0mm Close Type:5.0mm

Pin Header Series

KIS1-203A 2.54mm Mini Jumper Series

Electrical Specification:
Current Rating: 1 AMP
Insulator Resistance: 5000M Ohm¸min. at DC 500V
Contact Resistance: 20m Ohm¸ max. at DC 100mA
Operating Temperature: -55ºC~+105ºC

Material:
Housing: 30% Glass filled PBT UL94V-0
Contacts: Brass or Phosphor Bronze
Plating: Selective gold plated: gold plated on mating area and nickel plated on wire cutting area
Gold plated: 3u" over 50u" nickel



CLOSE

H
6.5
8.5

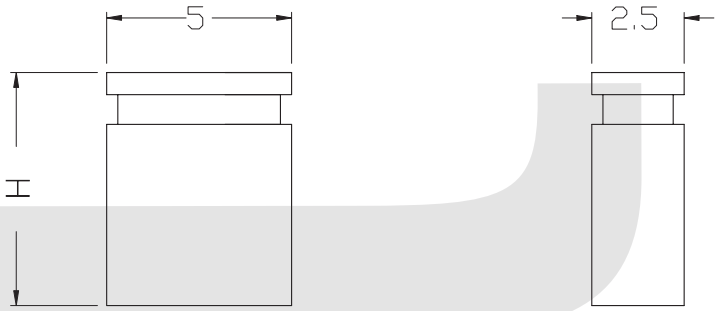

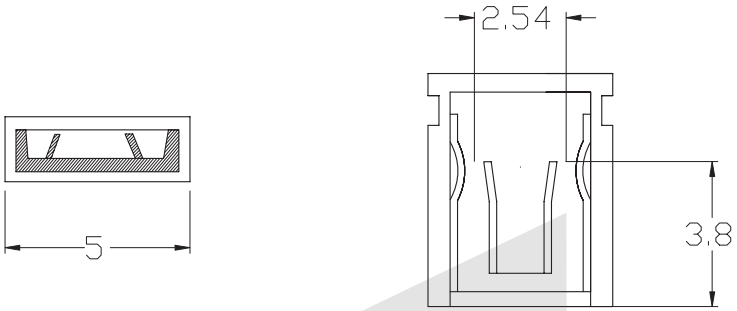

ORDER INFORMATION

Product NO.: KLS1-203 A-C-B-6.0

Pos. NO.
Series No.
Pitch: A=2.54mm B=2.00mm
Housing Type: O-Open C-Close
Color: B- Black R-Red L-Blue G-Green

Height:
Pitch 2.54mm Open Type:4.5mm / 6.0mm / 8.0mm / 13.5mm
Pitch 2.54mm Close Type:6.5mm / 8.5mm

Pitch 2.0mm Open Type:3.5mm / 4.5mm
Pitch 2.0mm Close Type:5.0mm

DIN 41612 Series

KLS1-D2 2x32Pin Two row Long B Type

Electrical:

Contact Resistance: 30 mΩ Max. At DC 100mA
Insulator Resistance: 1000MΩ Min. at 500VDC
Withstand Voltage: 1000 VAC for 1 minute
Current Rating: 2 AMP
Volatge Rating: 250 VAC
Operating Temperature: -55ºC~+105ºC

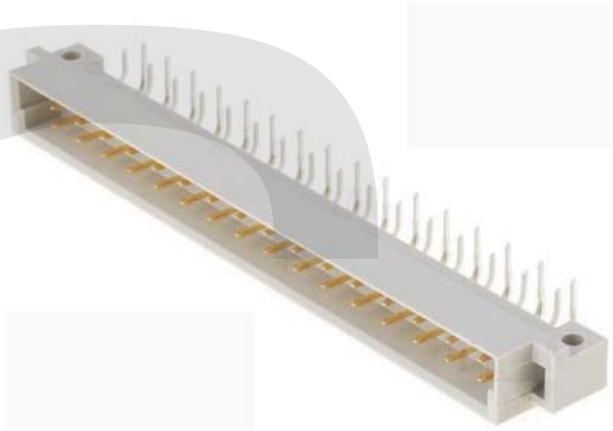

Material:

Insulator: Glass-filled thermoplastic PBT UL94V-0
Contacts: Male-Brass / Female-Phosphor Bronze
Plating: full gold or selected gold in mating area.

Male-Right Pin/2x32Pin

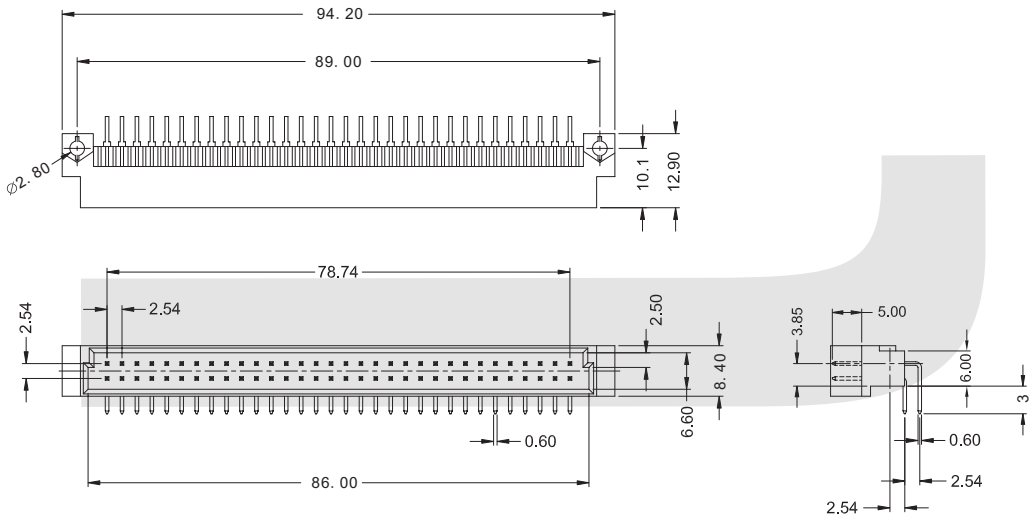

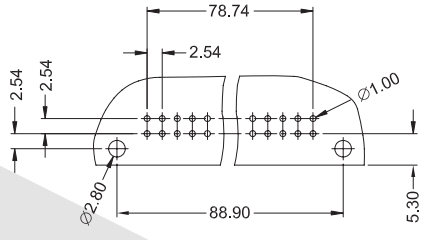

PCB Layout

Pitch	Position	Rows with Contacts	Contact Arrange	Part Number
2.54mm	64	a b		2264
	32	a -		2132
5.08mm	32	a b		2232
	16	a -		2116

ORDER INFORMATION

Product No.: KLS1-D2-2264-MR

Pos. No.
Din41612 2x32Pin Two row Long Type
Part Number: 2264 / 2132 / 2232 / 2116
Tail Style: S-4.0mm Straight pin
W1-13mm Straight pin
R-Right pin
Contact Type: M=Male F=Female

DIN 41612 Series

KLS1-D2 2x32Pin Two row Long B Type

Electrical:

Contact Resistance: 30 mΩ Max. At DC 100mA
Insulator Resistance: 1000MΩ Min. at 500VDC
Withstand Voltage: 1000 VAC for 1 minute
Current Rating: 2 AMP
Volatge Rating: 250 VAC
Operating Temperature: -55ºC~+105ºC



Material:

Insulator: Glass-filled thermoplastic PBT UL94V-0
Contacts: Male-Brass / Female-Phosphor Bronze
Plating: full gold or selected gold in mating area.

Female-4.0mm Straight pin /2x32Pin

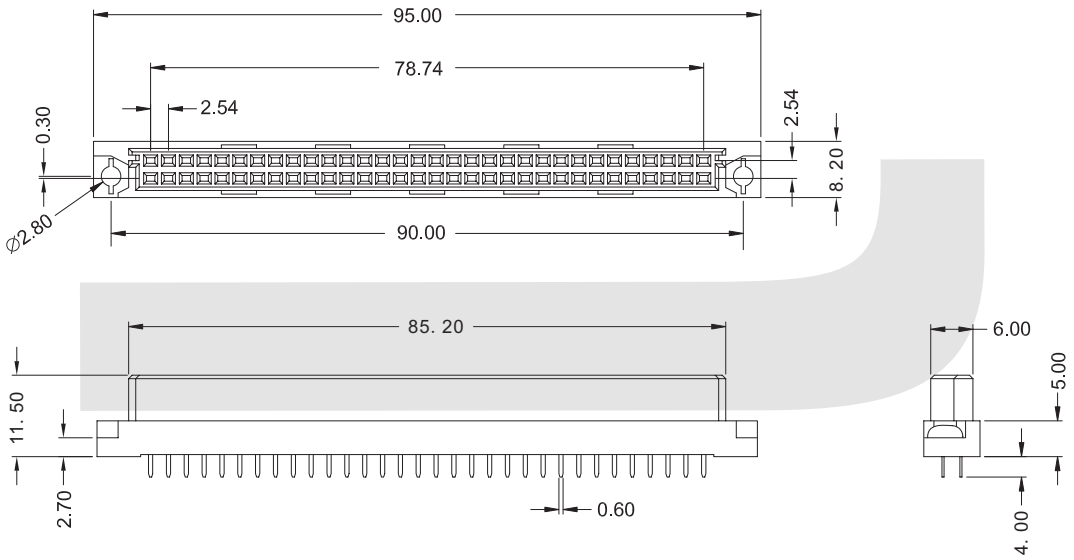

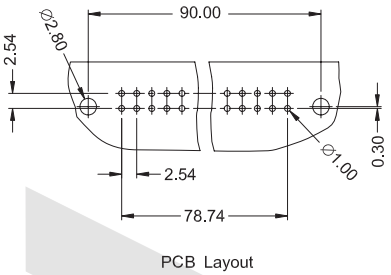

PCB Layout

Pitch	Position	Rows with Contacts	Contact Arrange	Part Number
2.54mm	64	a b		2264
	32	a -		2132
5.08mm	32	a b		2232
	16	a -		2116

ORDER INFORMATION

Product No.: KLS1-D2-2264-F S

Pos. No.
Din41612 2x32Pin Two row Long Type
Part Number: 2264 / 2132 / 2232 / 2116
Tail Style: S-4.0mm Straight pin
W1-13mm Straight pin
R-Right pin
Contact Type: M=Male F=Female

I

DIN 41612 Series

KLS1-D2 2x32Pin Two row Long B Type



Electrical:

Contact Resistance: 30 mΩ Max. At DC 100mA
Insulator Resistance: 1000MΩ Min. at 500VDC
Withstand Voltage: 1000 VAC for 1 minute
Current Rating: 2 AMP
Volatge Rating: 250 VAC
Operating Temperature: -55ºC~+105ºC

Material:

Insulator: Glass-filled thermoplastic PBT UL94V-0
Contacts: Male-Brass / Female-Phosphor Bronze
Plating: full gold or selected gold in mating area.

Female-13mm Straight pin /2x32Pin

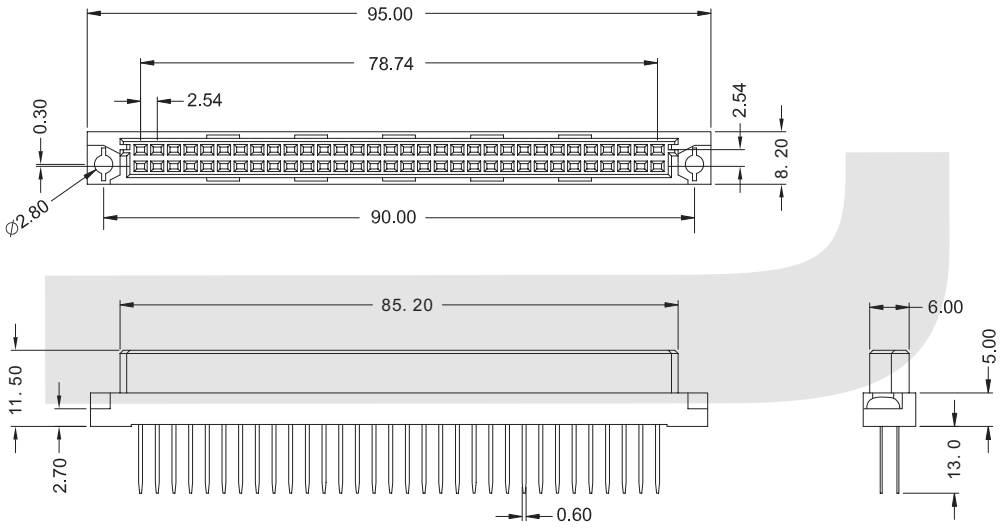

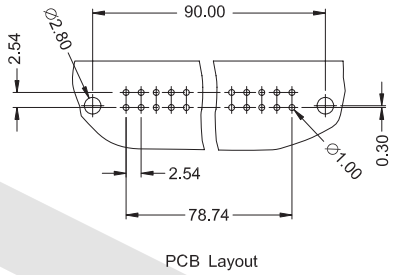

PCB Layout

Pitch	Position	Rows with Contacts	Contact Arrange	Part Number
2.54mm	64	a b		2264
	32	a -		2132
5.08mm	32	a b		2232
	16	a -		2116

ORDER INFORMATION

Product No.: KLS1-D2-2264-MW1

Pos. No.
Din41612 2x32Pin Two row Long Type
Part Number: 2264 / 2132 / 2232 / 2116
Tail Style: S-4.0mm Straight pin
W1-13mm Straight pin
R-Right pin
Contact Type: M=Male F=Female

I

DIN 41612 Series

KLS1-D2 2x32Pin Two row Long Q Type

Electrical:

Contact Resistance: 30 mΩ Max. At DC 100mA
Insulator Resistance: 1000MΩ Min. at 500VDC
Withstand Voltage: 1000 VAC for 1 minute
Current Rating: 2 AMP
Volatge Rating: 250 VAC
Operating Temperature: -55ºC~+105ºC

Material:

Insulator: Glass-filled thermoplastic PBT UL94V-0
Contacts: Male-Brass / Female-Phosphor Bronze
Plating: full gold or selected gold in mating area.

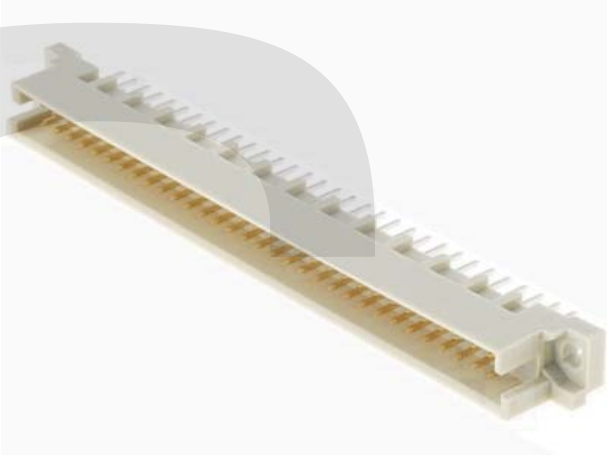

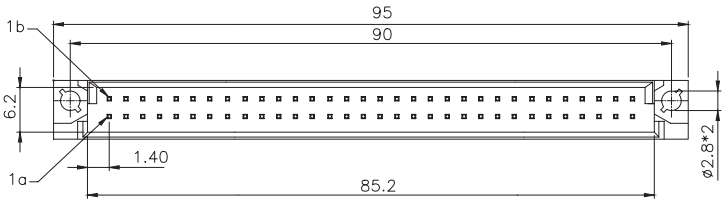

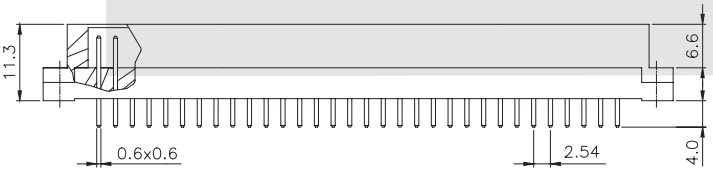

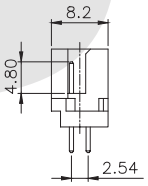

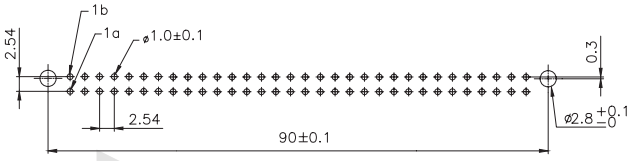

PCB Layout

Pitch	Position	Rows with Contacts	Contact Arrange	Part Number
2.54mm	64	a b		2264
	32	a -		2132
5.08mm	32	a b		2232
	16	a -		2116

ORDER INFORMATION

Product No.: KLS1-D2-2264-MS

Pos. No.
Din41612 2x32Pin Two row Long Type
Part Number: 2264 / 2132 / 2232 / 2116
Tail Style: S-4.0mm Straight pin
W1-13mm Straight pin
R-Right pin
Contact Type: M=Male F=Female

DIN 41612 Series

KLS1-D2 2x32Pin Two row Long Q Type

I

Electrical:

Contact Resistance: 30 mΩ Max. At DC 100mA
Insulator Resistance: 1000MΩ Min. at 500VDC
Withstand Voltage: 1000 VAC for 1 minute
Current Rating: 2 AMP
Volatge Rating: 250 VAC
Operating Temperature: -55ºC~+105ºC

Material:

Insulator: Glass-filled thermoplastic PBT UL94V-0
Contacts: Male-Brass / Female-Phosphor Bronze
Plating: full gold or selected gold in mating area.

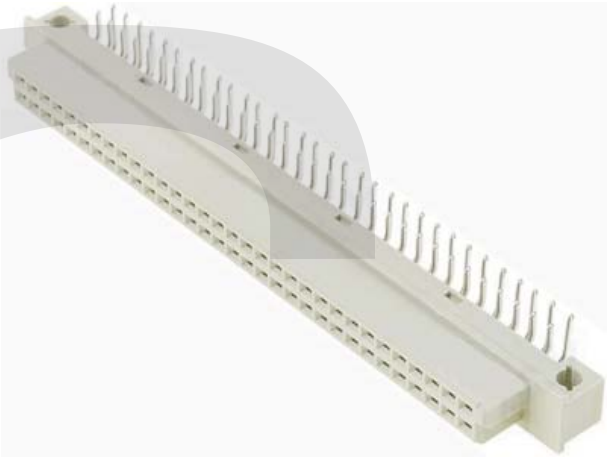

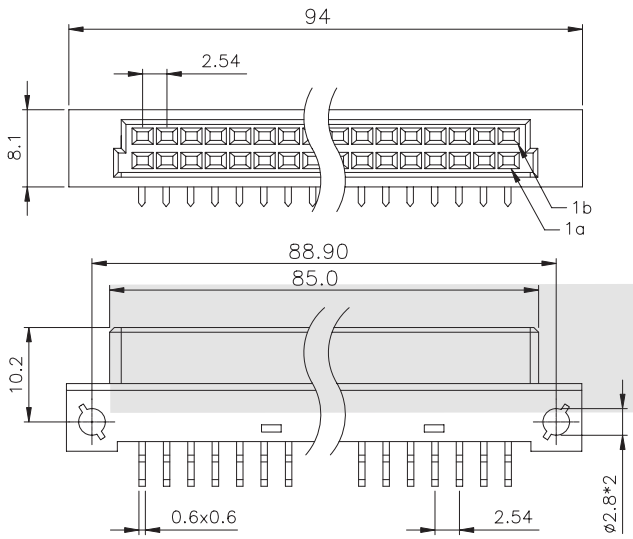

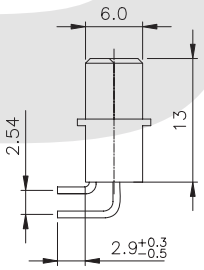

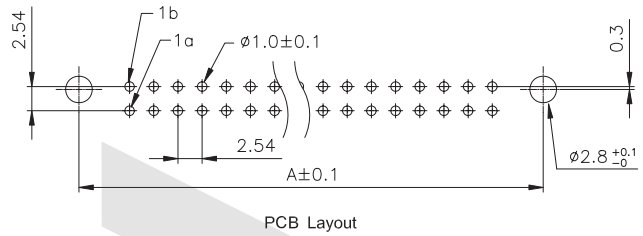

PCB Layout

Pitch	Position	Rows with Contacts	Contact Arrange	Part Number
2.54mm	64	a b		2264
	32	a -		2132
5.08mm	32	a b		2232
	16	a -		2116

ORDER INFORMATION

Product No.: KLS1-D2-2264-F R

Pos. No.
Din41612 2x32Pin Two row Long Type
Part Number: 2264 / 2132 / 2232 / 2116

Tail Style: S-4.0mm Straight pin
W1-13mm Straight pin
R-Right pin
Contact Type: M=Male F=Female

DIN 41612 Series

KLS1-D2 2x32Pin Two row Long Q Type

Electrical:

Contact Resistance: 30 mΩ Max. At DC 100mA
Insulator Resistance: 1000MΩ Min. at 500VDC
Withstand Voltage: 1000 VAC for 1 minute
Current Rating: 2 AMP
Volatge Rating: 250 VAC
Operating Temperature: -55ºC~+105ºC

Material:

Insulator: Glass-filled thermoplastic PBT UL94V-0
Contacts: Male-Brass / Female-Phosphor Bronze
Plating: full gold or selected gold in mating area.

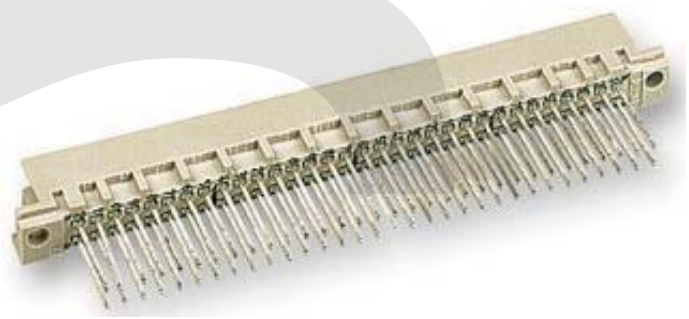

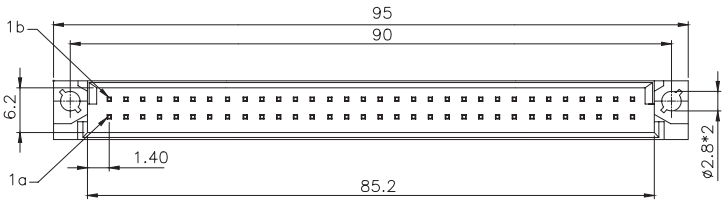

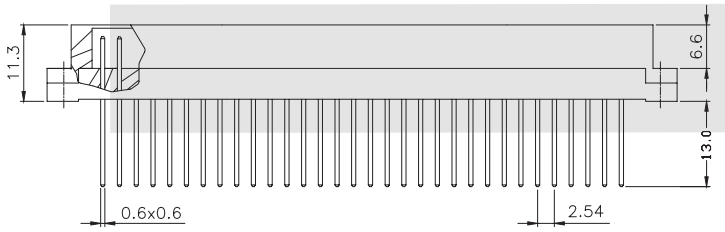

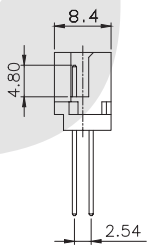

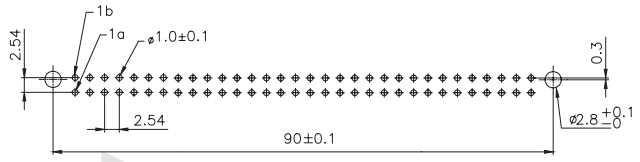

PCB Layout

Pitch	Position	Rows with Contacts	Contact Arrange	Part Number
2.54mm	64	a b		2264
	32	a -		2132
5.08mm	32	a b		2232
	16	a -		2116

ORDER INFORMATION

Product No.: KLS1-D2-2264-MW1

Pos. No.
Din41612 2x32Pin Two row Long Type
Part Number: 2264 / 2132 / 2232 / 2116
Tail Style: S-4.0mm Straight pin
W1-13mm Straight pin
R-Right pin
Contact Type: M=Male F=Female

I

DIN 41612 Series

KLS1-D2Q 2x10Pin Two row Short B Type

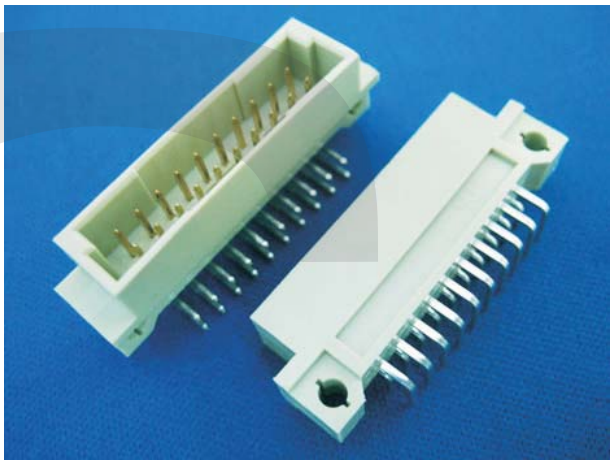

Electrical:

Contact Resistance: 30 mΩ Max. Insulator
Insulation Resistance: 1000 MΩ Min. at 500 VDC
Withstand Voltage: 1000 VAC for 1 minute
Current Rating: 2 AMP
Volatge Rating: 250 VAC
Operating Temperature: -55°C~+105°C

Material:

Insulator: Glass-filled thermoplastic PBT UL94V-0
Contacts: Male-Brass / Female-Phosphor Bronze
Plating: full gold or selected gold in mating area.

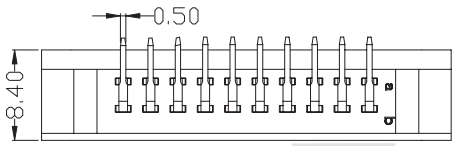

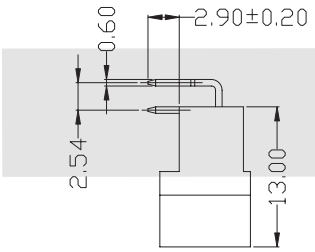

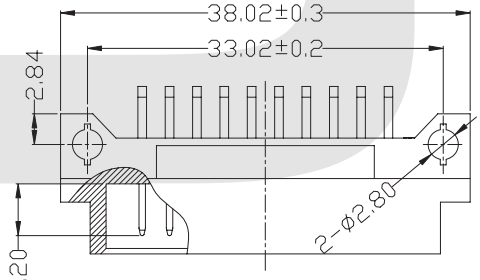

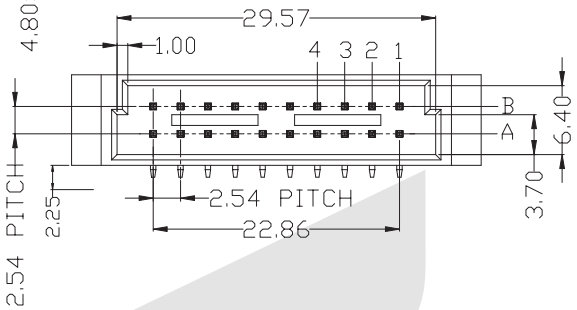

Pitch	Position	Rows with Contacts	Contact Arrange	Part Number
2,54mm	20	a b	4321	2220
	10	a -	4321	2110
5,08mm	10	a b	4321	2210
	05	a -	4321	2105

ORDER INFORMATION

Product No.: KLS1-D2Q-2220-MR

Pos. No.
Din41612 2x10Pin Two row Short Type
Part Number: 2220 / 2110 / 2210 / 2105
Tail Style: S-4.0mm Straight pin
W1-13mm Straight pin
R-Right pin
Contact Type: M=Male F=Female

DIN 41612 Series

KLS1-D2Q 2x10Pin Two row Short B Type

Electrical:

Contact Resistance: 30 mΩ Max. Insulator
Insulation Resistance: 1000 MΩ Min. at 500 VDC
Withstand Voltage: 1000 VAC for 1 minute
Current Rating: 2 AMP
Volatge Rating: 250 VAC
Operating Temperature: -55°C~+105°C

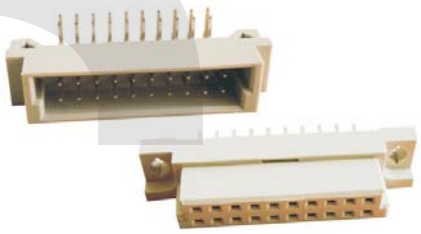

Material:

Insulator: Glass-filled thermoplastic PBT UL94V-0
Contacts: Male-Brass / Female-Phosphor Bronze
Plating: full gold or selected gold in mating area.

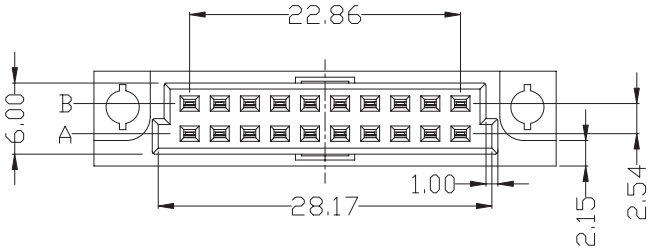

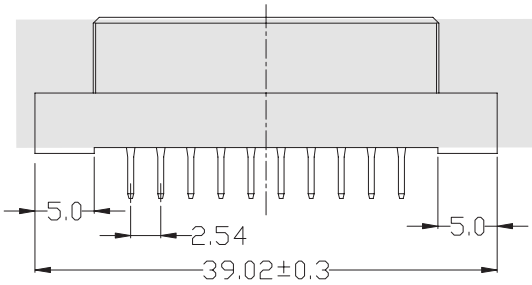

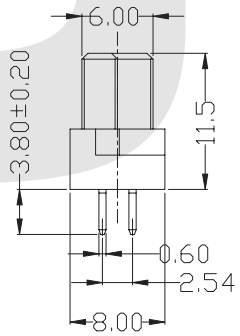

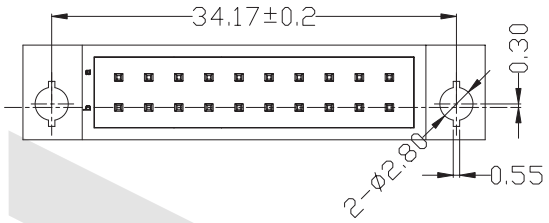

Pitch	Position	Rows with Contacts	Contact Arrange	Part Number
2.54mm	20	a b		2220
	10	a -		2110
5.08mm	10	a b		2210
	05	a -		2105

ORDER INFORMATION

Product No.: KLS1-D2Q-2220-F S

Pos. No.
Din41612 2x10Pin Two row Short Type
Part Number: 2220 / 2110 / 2210 / 2105

Tail Style: S-4.0mm Straight pin
W1-13mm Straight pin
R-Right pin
Contact Type: M=Male F=Female

DIN 41612 Series

KLS1-D2Q 2x10Pin Two row Short B Type

Electrical:

Contact Resistance: 30 mΩ Max. Insulator
Insulation Resistance: 1000 MΩ Min. at 500 VDC
Withstand Voltage: 1000 VAC for 1 minute
Current Rating: 2 AMP
Volatge Rating: 250 VAC
Operating Temperature: -55°C~+105°C

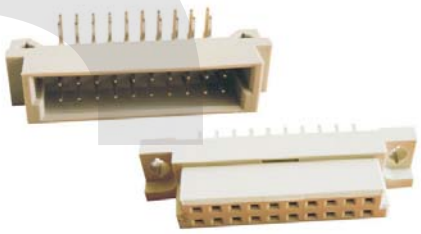

Material:

Insulator: Glass-filled thermoplastic PBT UL94V-0
Contacts: Male-Brass / Female-Phosphor Bronze
Plating: full gold or selected gold in mating area.

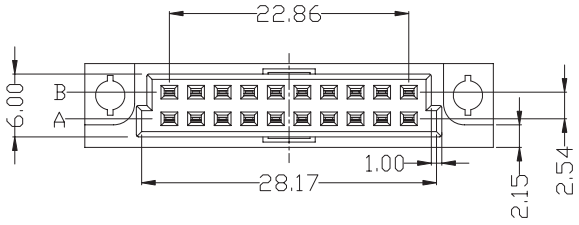

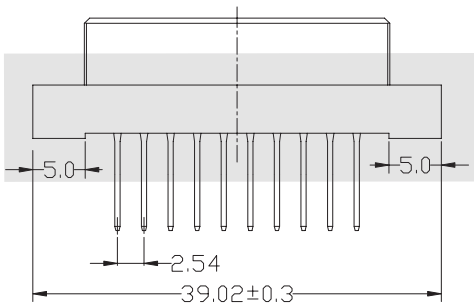

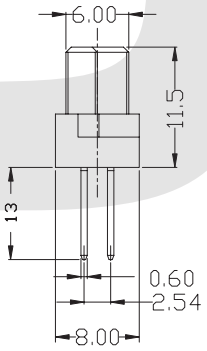

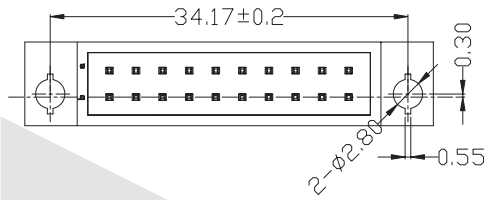

Pitch	Position	Rows with Contacts	Contact Arrange	Part Number
2.54mm	20	a b		2220
	10	a -		2110
5.08mm	10	a b		2210
	05	a -		2105

ORDER INFORMATION

Product No.: KLS1-D2Q-2220-F W1

- Pos. No.
- Din41612 2x10Pin Two row Short Type
- Part Number: 2220 / 2110 / 2210 / 2105
- Tail Style: S-4.0mm Straight pin
  W1-13mm Straight pin
  R-Right pin
- Contact Type: M=Male F=Female

DIN 41612 Series

KLS1-D2X 2x16Pin Two row Short B Type

Electrical:

Contact Resistance: 30 mΩ Max. Insulator
Insulation Resistance: 1000 MΩ Min. at 500 VDC
Withstand Voltage: 1000 VAC for 1 minute
Current Rating: 2 AMP
Volatge Rating: 250 VAC
Operating Temperature: -55°C~+105°C

Material:

Insulator: Glass-filled thermoplastic PBT UL94V-0
Contacts: Male-Brass / Female-Phosphor Bronze
Plating: full gold or selected gold in mating area.

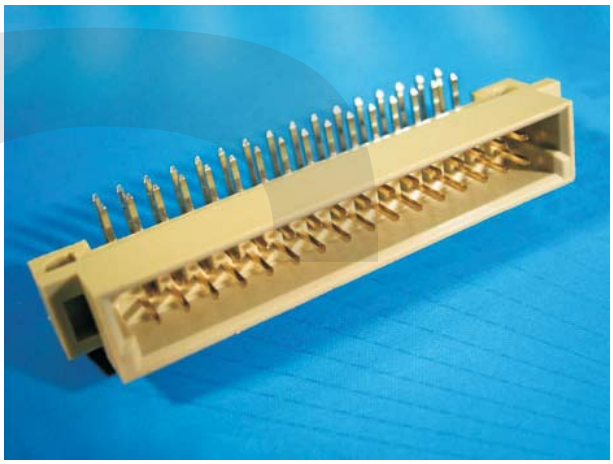

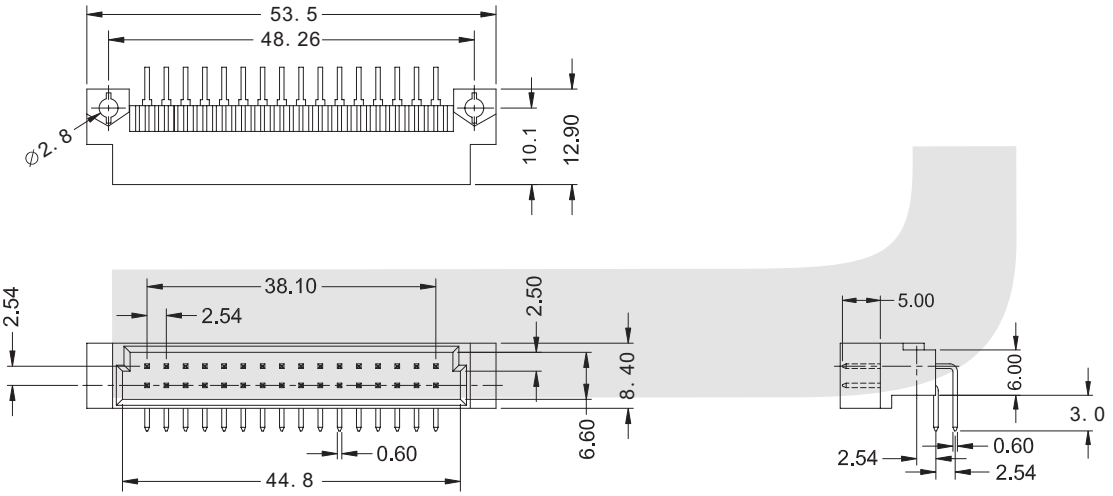

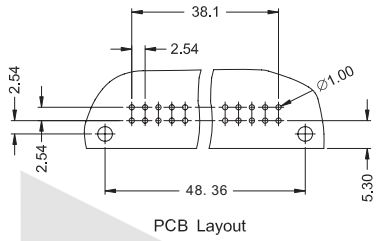

PCB Layout

Pitch	Position	Rows with Contacts	Contact Arrange	Part Number
2.54mm	32	a b		2232
	16	a -		2116
5.08mm	16	a b		2216
	08	a -		2108

ORDER INFORMATION

Product No.: KLS1-D2X-2232-MR

Pos. No.
Din41612 2x16Pin Two row Short Type
Part Number: 2232 / 2116 / 2216 / 2108

Tail Style: S-4.0mm Straight pin
W1-13mm Straight pin
R-Right pin
Contact Type: M=Male F=Female

DIN 41612 Series

KLS1-D2X 2x16Pin Two row Short B Type

Electrical:

Contact Resistance: 30 mΩ Max. Insulator
Insulation Resistance: 1000 MΩ Min. at 500 VDC
Withstand Voltage: 1000 VAC for 1 minute
Current Rating: 2 AMP
Volatge Rating: 250 VAC
Operating Temperature: -55°C~+105°C

Material:

Insulator: Glass-filled thermoplastic PBT UL94V-0
Contacts: Male-Brass / Female-Phosphor Bronze
Plating: full gold or selected gold in mating area.

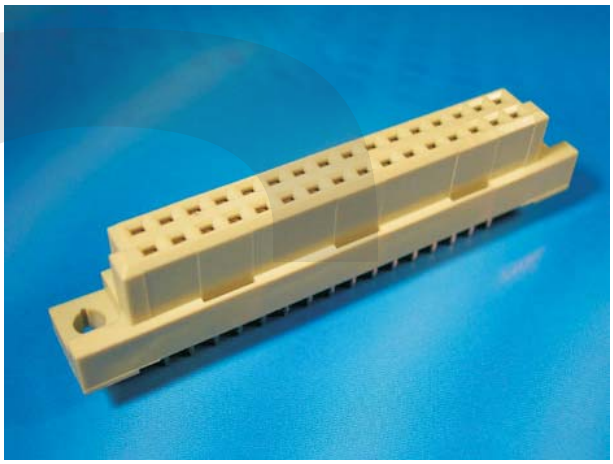

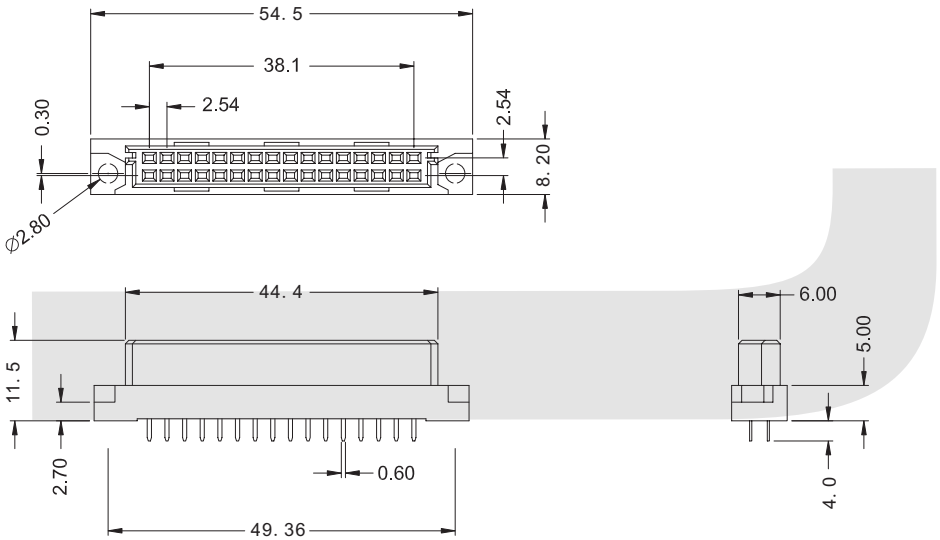

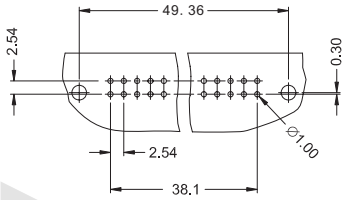

PCB Layout

Pitch	Position	Rows with Contacts	Contact Arrange	Part Number
2.54mm	32	a b		2232
	16	a -		2116
5.08mm	16	a b		2216
	08	a -		2108

ORDER INFORMATION

Product No.: KLS1-D2X-2232-F S

Pos. No.
Din41612 2x16Pin Two row Short Type
Part Number: 2232 / 2116 / 2216 / 2108

Tail Style: S-4.0mm Straight pin
W1-13mm Straight pin
R-Right pin

Contact Type: M=Male F=Female

DIN 41612 Series

KLS1-D2X 2x16Pin Two row Short B Type

Electrical:

Contact Resistance: 30 mΩ Max. Insulator
Insulation Resistance: 1000 MΩ Min. at 500 VDC
Withstand Voltage: 1000 VAC for 1 minute
Current Rating: 2 AMP
Volatge Rating: 250 VAC
Operating Temperature: -55°C~+105°C

Material:

Insulator: Glass-filled thermoplastic PBT UL94V-0
Contacts: Male-Brass / Female-Phosphor Bronze
Plating: full gold or selected gold in mating area.

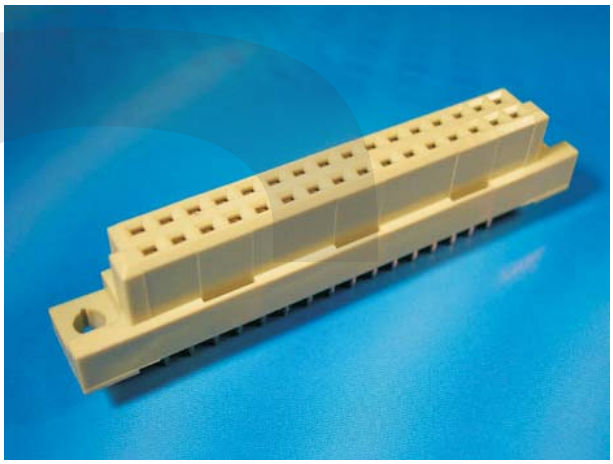

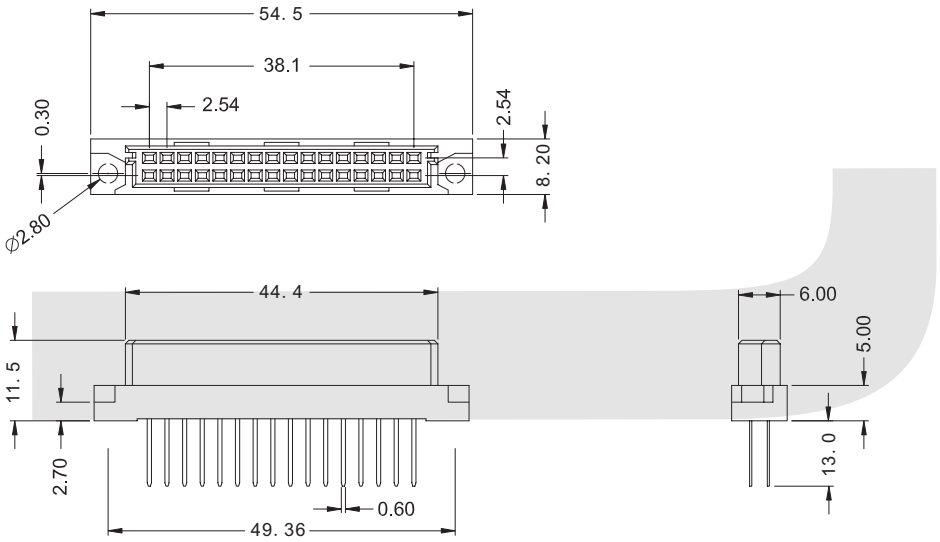

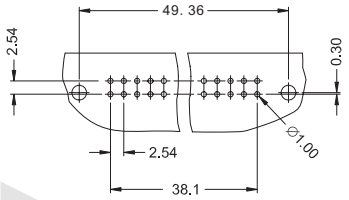

PCB Layout

Pitch	Position	Rows with Contacts	Contact Arrange	Part Number
2.54mm	32	a b	4 3 2 1	2232
	16	a -	4 3 2 1	2116
5.08mm	16	a b	4 3 2 1	2216
	08	a -	4 3 2 1	2108

ORDER INFORMATION

Product No.: KLS1-D2X-2232-F W1

Pos. No.
Din41612 2x16Pin Two row Short Type
Part Number: 2232 / 2116 / 2216 / 2108

Tail Style: S-4.0mm Straight pin
W1-13mm Straight pin
R-Right pin
Contact Type: M=Male F=Female

I

DIN 41612 Series

KLS1-D2X 2x16Pin Two row Short Q Type

Electrical:

Contact Resistance: 30 mΩ Max. Insulator
Insulation Resistance: 1000 MΩ Min. at 500 VDC
Withstand Voltage: 1000 VAC for 1 minute
Current Rating: 2 AMP
Volatge Rating: 250 VAC
Operating Temperature: -55°C~+105°C

Material:

Insulator: Glass-filled thermoplastic PBT UL94V-0
Contacts: Male-Brass / Female-Phosphor Bronze
Plating: full gold or selected gold in mating area.

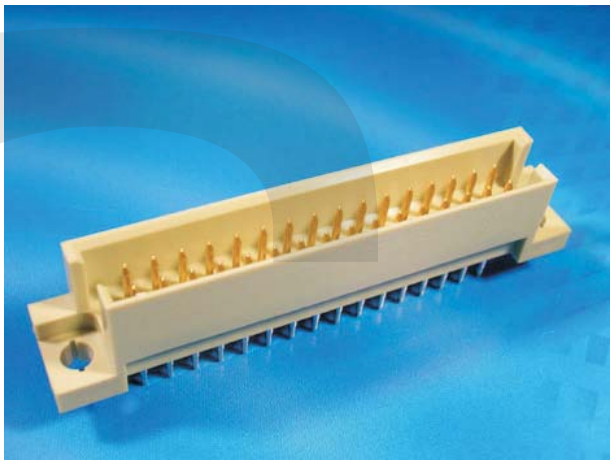

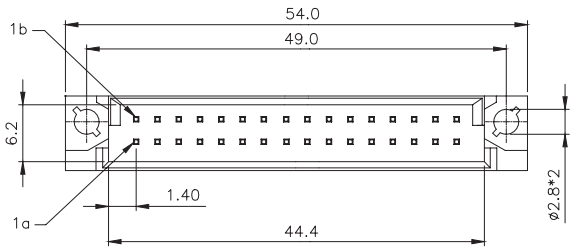

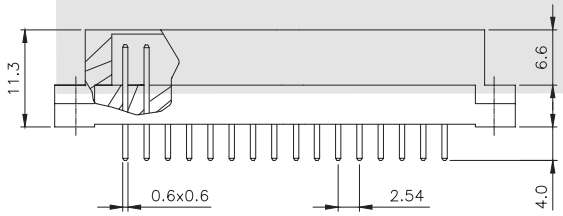

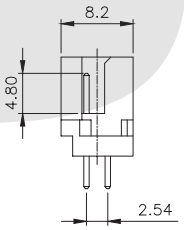

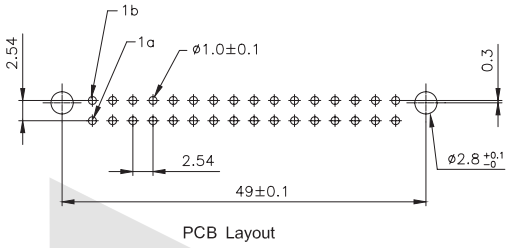

PCB Layout

Pitch	Position	Rows with Contacts	Contact Arrange	Part Number
2.54mm	32	a b		2232
	16	a -		2116
5.08mm	16	a b		2216
	08	a -		2108

ORDER INFORMATION

Product No.: KLS1-D2X-2232-MS

Pos. No.
Din41612 2x16Pin Two row Short Type
Part Number: 2232 / 2116 / 2216 / 2108

Tail Style: S-4.0mm Straight pin
W1-13mm Straight pin
R-Right pin
Contact Type: M=Male F=Female

I

DIN 41612 Series

KLS1-D2X 2x16Pin Two row Short Q Type

Electrical:

Contact Resistance: 30 mΩ Max. Insulator
Insulation Resistance: 1000 MΩ Min. at 500 VDC
Withstand Voltage: 1000 VAC for 1 minute
Current Rating: 2 AMP
Volatge Rating: 250 VAC
Operating Temperature: -55°C~+105°C

Material:

Insulator: Glass-filled thermoplastic PBT UL94V-0
Contacts: Male-Brass / Female-Phosphor Bronze
Plating: full gold or selected gold in mating area.

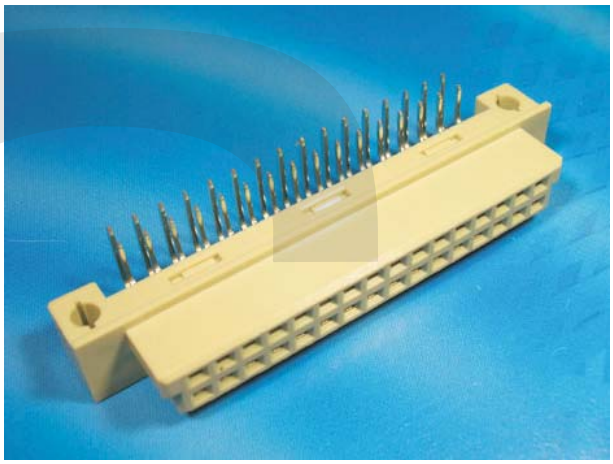

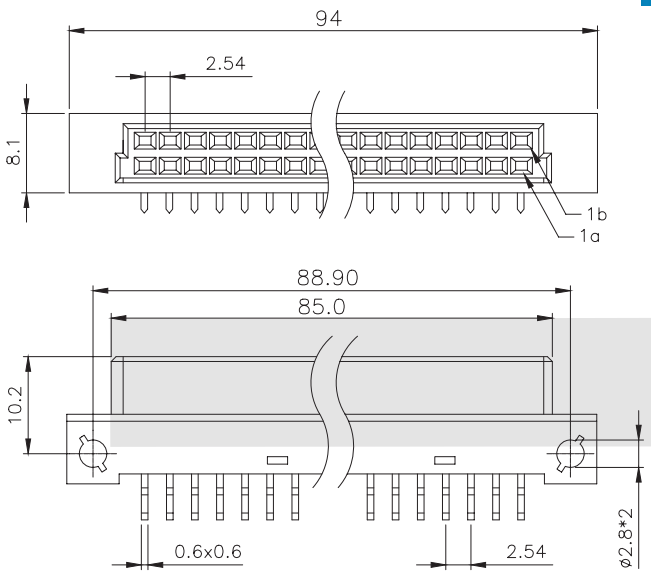

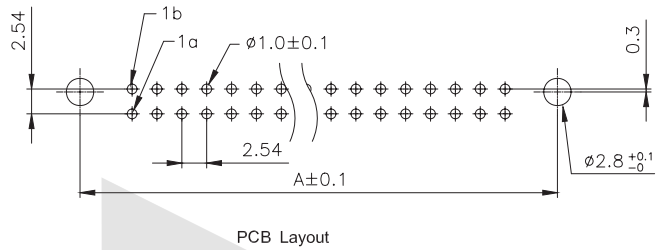

PCB Layout

Pitch	Position	Rows with Contacts	Contact Arrange	Part Number
2.54mm	32	a b	4 3 2 1	2232
	16	a -	4 3 2 1	2116
5.08mm	16	a b	4 3 2 1	2216
	08	a -	4 3 2 1	2108

ORDER INFORMATION

Product No.: KLS1-D2X-2232-F R

- Pos. No.
- Din41612 2x16Pin Two row Short Type
- Part Number: 2232 / 2116 / 2216 / 2108
- Tail Style: S-4.0mm Straight pin
  W1-13mm Straight pin
  R-Right pin
- Contact Type: M=Male F=Female

DIN 41612 Series

KLS1-D2X 2x16Pin Two row Short Q Type

Electrical:

Contact Resistance: 30 mΩ Max. Insulator
Insulation Resistance: 1000 MΩ Min. at 500 VDC
Withstand Voltage: 1000 VAC for 1 minute
Current Rating: 2 AMP
Volatge Rating: 250 VAC
Operating Temperature: -55°C~+105°C

Material:

Insulator: Glass-filled thermoplastic PBT UL94V-0
Contacts: Male-Brass / Female-Phosphor Bronze
Plating: full gold or selected gold in mating area.

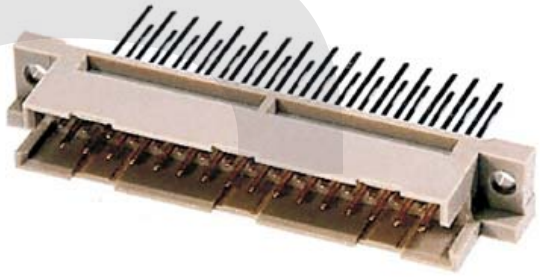

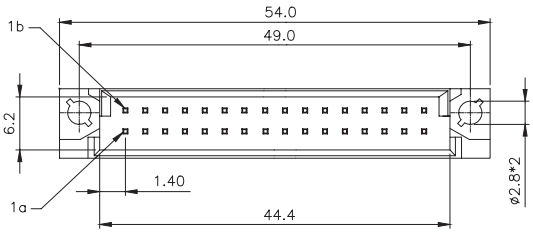

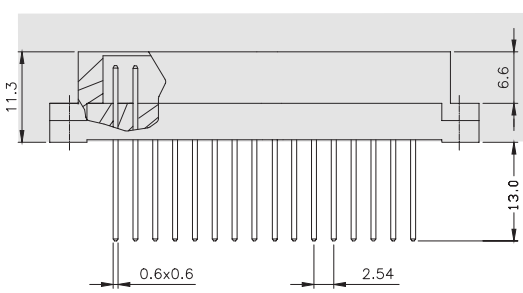

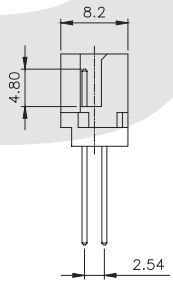

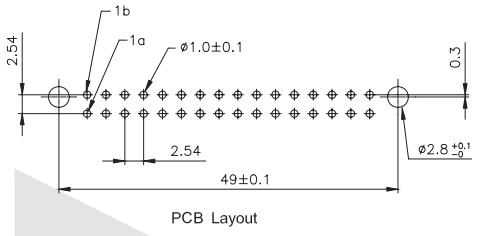

PCB Layout

Pitch	Position	Rows with Contacts	Contact Arrange	Part Number
2.54mm	32	a b		2232
	16	a -		2116
5.08mm	16	a b		2216
	08	a -		2108

ORDER INFORMATION

Product No.: KLS1-D2X-2232-MW1

Pos. No.
Din41612 2x16Pin Two row Short Type
Part Number: 2232 / 2116 / 2216 / 2108

Tail Style: S-4.0mm Straight pin
W1-13mm Straight pin
R-Right pin
Contact Type: M=Male F=Female

DIN 41612 Series

KLS1-D2Y 2x22Pin Two row Short B Type

Electrical:

Contact Resistance: 30 mΩ Max. Insulator
Insulation Resistance: 1000 MΩ Min. at 500 VDC
Withstand Voltage: 1000 VAC for 1 minute
Current Rating: 2 AMP
Volatge Rating: 250 VAC
Operating Temperature: -55°C~+105°C

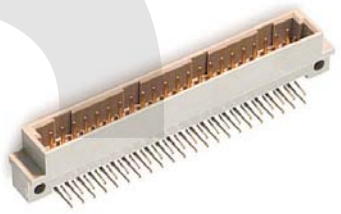

Material:

Insulator: Glass-filled thermoplastic PBT UL94V-0
Contacts: Male-Brass / Female-Phosphor Bronze
Plating: full gold or selected gold in mating area.

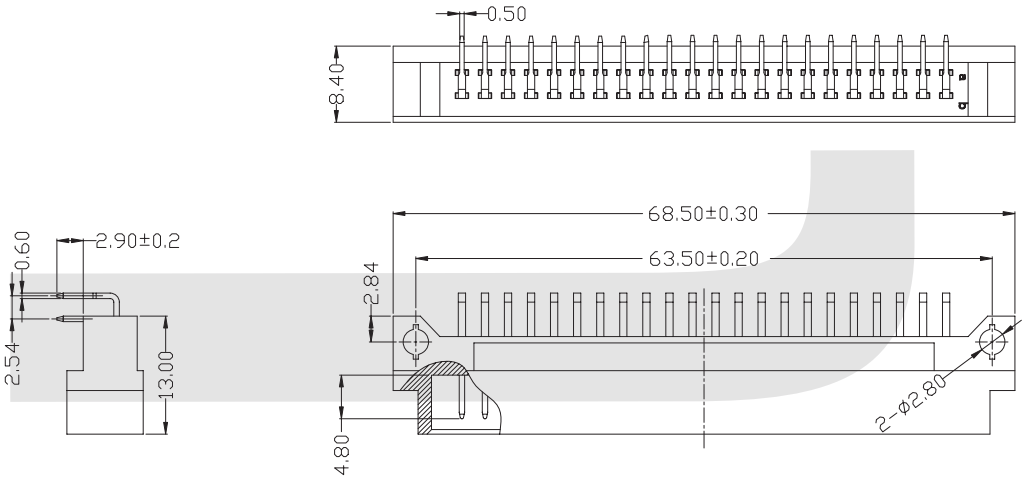

Pitch	Position	Rows with Contacts	Contact Arrange	Part Number
2.54mm	44	a b		2244
	22	a -		2122
5.08mm	22	a b		2222
	11	a -		2111

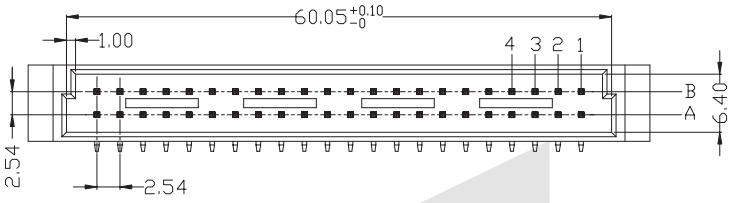

ORDER INFORMATION

Product No.: KLS1-D2Y-2244-MR

Pos. No.
Din41612 2x22Pin Two row Short Type
Part Number: 2244 / 2122 / 2222 / 2111

Tail Style: S-4.0mm Straight pin
W1-13mm Straight pin
R-Right pin
Contact Type: M=Male F=Female

DIN 41612 Series

KLS1-D2Y 2x22Pin Two row Short B Type

Electrical:

Contact Resistance: 30 mΩ Max. Insulator
Insulation Resistance: 1000 MΩ Min. at 500 VDC
Withstand Voltage: 1000 VAC for 1 minute
Current Rating: 2 AMP
Volatge Rating: 250 VAC
Operating Temperature: -55°C~+105°C

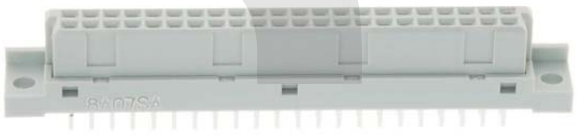

Material:

Insulator: Glass-filled thermoplastic PBT UL94V-0
Contacts: Male-Brass / Female-Phosphor Bronze
Plating: full gold or selected gold in mating area.

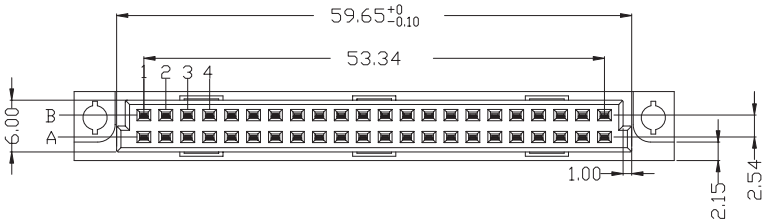

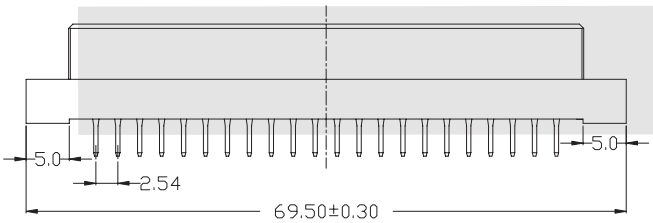

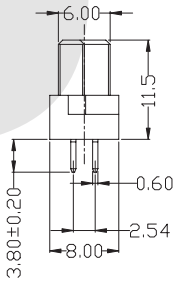

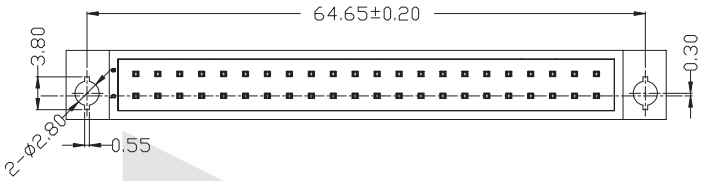

Pitch	Position	Rows with Contacts	Contact Arrange	Part Number
2.54mm	44	a b		2244
	22	a -		2122
5.08mm	22	a b		2222
	11	a -		2111

ORDER INFORMATION

Product No.: KLS1-D2Y-2244-F S

Pos. No.
Din41612 2x22Pin Two row Short Type
Part Number: 2244 / 2122 / 2222 / 2111
Tail Style: S-4.0mm Straight pin
W1-13mm Straight pin
R-Right pin
Contact Type: M=Male F=Female

DIN 41612 Series

KLS1-D2Y 2x22Pin Two row Short B Type

Electrical:

Contact Resistance: 30 mΩ Max. Insulator
Insulation Resistance: 1000 MΩ Min. at 500 VDC
Withstand Voltage: 1000 VAC for 1 minute
Current Rating: 2 AMP
Volatge Rating: 250 VAC
Operating Temperature: -55°C~+105°C

Material:

Insulator: Glass-filled thermoplastic PBT UL94V-0
Contacts: Male-Brass / Female-Phosphor Bronze
Plating: full gold or selected gold in mating area.

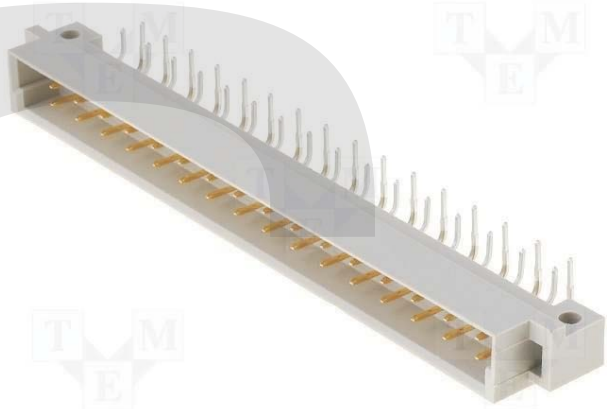

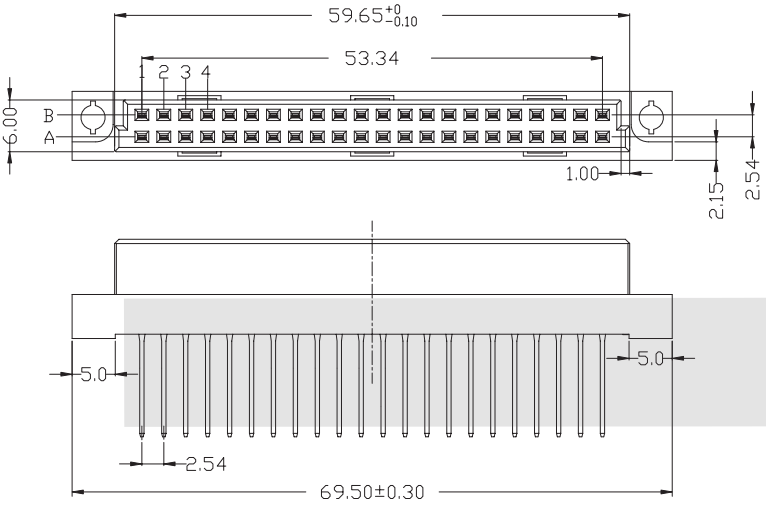

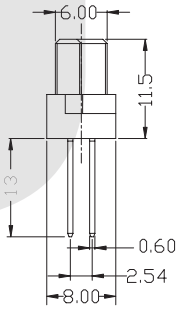

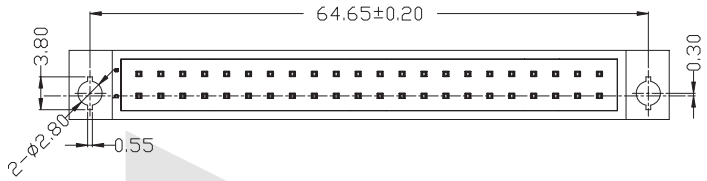

Pitch	Position	Rows with Contacts	Contact Arrange	Part Number
2.54mm	44	a b		2244
	22	a -		2122
5.08mm	22	a b		2222
	11	a -		2111

ORDER INFORMATION

Product No.: KLS1-D2Y-2244-F W1

Pos. No.
Din41612 2x22Pin Two row Short Type
Part Number: 2244 / 2122 / 2222 / 2111
Tail Style: S-4.0mm Straight pin
W1-13mm Straight pin
R-Right pin
Contact Type: M=Male F=Female

DIN 41612 Series

KLS1-D2Z 2x24Pin Two row Short B Type

Electrical:

Contact Resistance: 30 mΩ Max. Insulator
Insulation Resistance: 1000 MΩ Min. at 500 VDC
Withstand Voltage: 1000 VAC for 1 minute
Current Rating: 2 AMP
Volatge Rating: 250 VAC
Operating Temperature: -55°C~+105°C

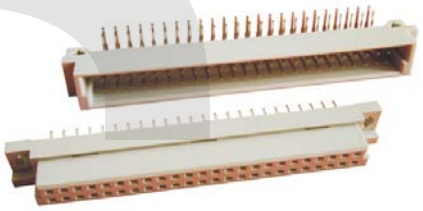

Material:

Insulator: Glass-filled thermoplastic PBT UL94V-0
Contacts: Male-Brass / Female-Phosphor Bronze
Plating: full gold or selected gold in mating area.

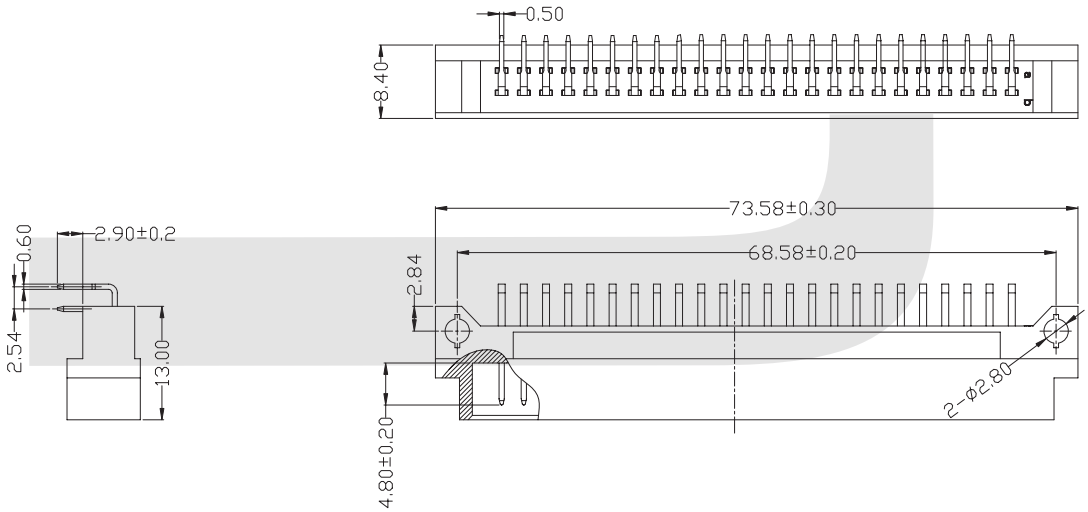

Pitch	Position	Rows with Contacts	Contact Arrange	Part Number
2.54mm	48	a b		2248
	24	a –		2124
5.08mm	24	a b		2224
	12	a –		2112

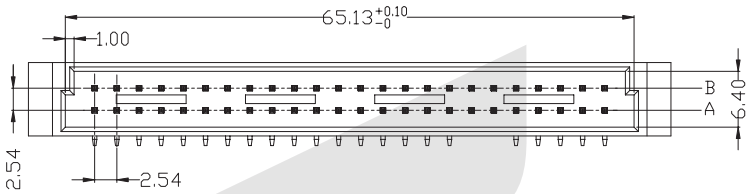

ORDER INFORMATION

Product No.: KLS1-D2Z-2248-MR

Pos. No.
Din41612 2x24Pin Two row Short Type
Part Number: 2248 / 2124 / 2224 / 2112

Tail Style: S-4.0mm Straight pin
W1-13mm Straight pin
R-Right pin
Contact Type: M=Male F=Female

DIN 41612 Series

KLS1-D2Z 2x24Pin Two row Short B Type

Electrical:

Contact Resistance: 30 mΩ Max. Insulator
Insulation Resistance: 1000 MΩ Min. at 500 VDC
Withstand Voltage: 1000 VAC for 1 minute
Current Rating: 2 AMP
Volatge Rating: 250 VAC
Operating Temperature: -55°C~+105°C

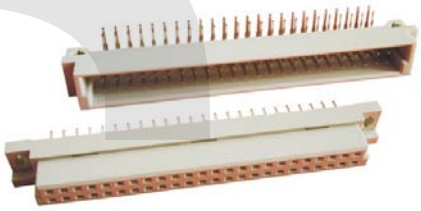

Material:

Insulator: Glass-filled thermoplastic PBT UL94V-0
Contacts: Male-Brass / Female-Phosphor Bronze
Plating: full gold or selected gold in mating area.

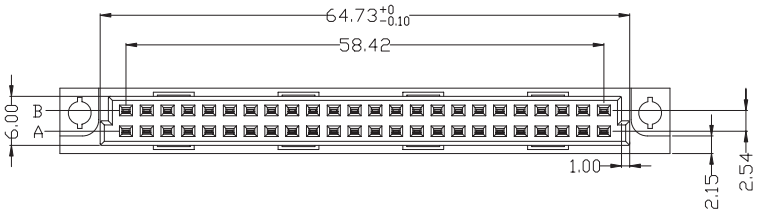

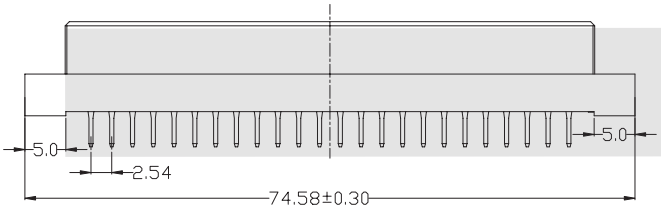

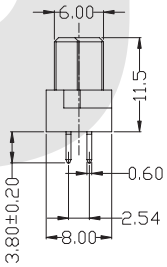

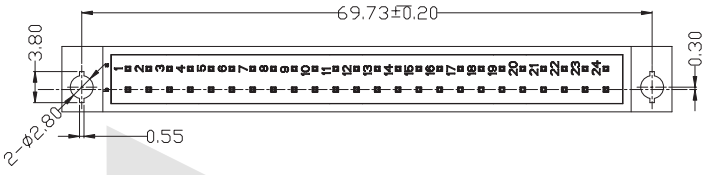

Pitch	Position	Rows with Contacts	Contact Arrange	Part Number
2.54mm	48	a b	4 3 2 1	2248
	24	a -	4 3 2 1	2124
5.08mm	24	a b	4 3 2 1	2224
	12	a -	4 3 2 1	2112

ORDER INFORMATION

Product No.: KLS1-D2Z-2248-F S

Pos. No.
Din41612 2x24Pin Two row Short Type
Part Number: 2248 / 2124 / 2224 / 2112

Tail Style: S-4.0mm Straight pin
W1-13mm Straight pin
R-Right pin
Contact Type: M=Male F=Female

DIN 41612 Series

KLS1-D2Z 2x24Pin Two row Short B Type

Electrical:

Contact Resistance: 30 mΩ Max. Insulator
Insulation Resistance: 1000 MΩ Min. at 500 VDC
Withstand Voltage: 1000 VAC for 1 minute
Current Rating: 2 AMP
Volatge Rating: 250 VAC
Operating Temperature: -55°C~+105°C

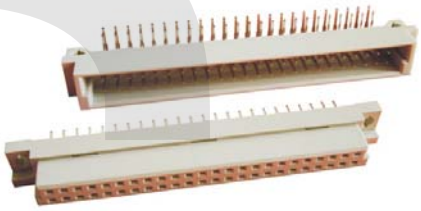

Material:

Insulator: Glass-filled thermoplastic PBT UL94V-0
Contacts: Male-Brass / Female-Phosphor Bronze
Plating: full gold or selected gold in mating area.

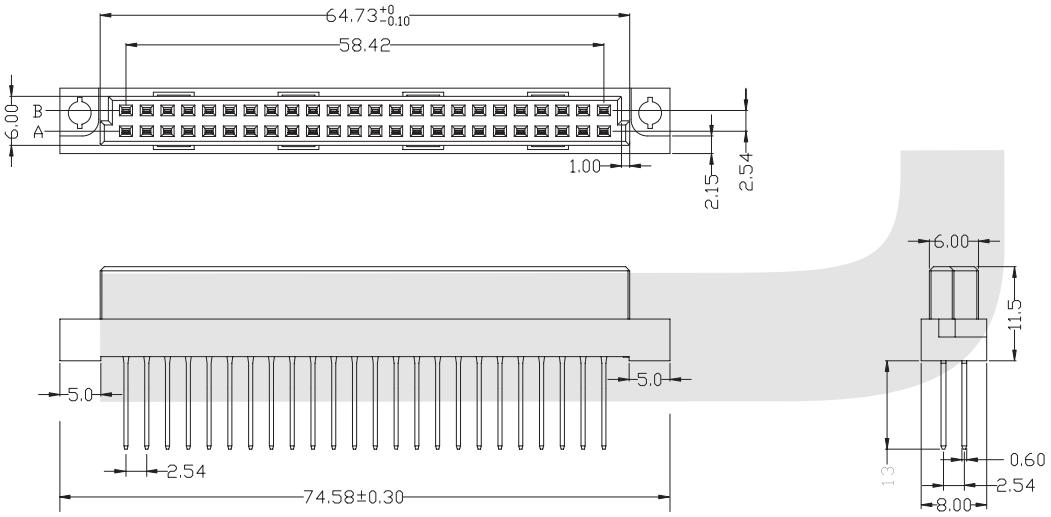

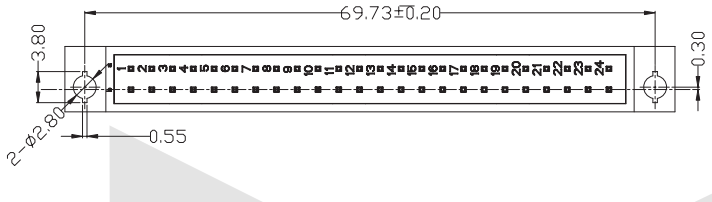

Pitch	Position	Rows with Contacts	Contact Arrange	Part Number
2.54mm	48	a b	4 3 2 1	2248
	24	a -	4 3 2 1	2124
5.08mm	24	a b	4 3 2 1	2224
	12	a -	4 3 2 1	2112

ORDER INFORMATION

Product No.: KLS1-D2Z-2248-F W1

Pos. No.
Din41612 2x24Pin Two row Short Type
Part Number: 2248 / 2124 / 2224 / 2112

Tail Style: S-4.0mm Straight pin
W1-13mm Straight pin
R-Right pin
Contact Type: M=Male F=Female

DIN 41612 Series

KLS1-D3 3X32Pin 3 row Long C Type

Electrical:

Contact Resistance: 30 mΩ Max. Insulator
Insulation Resistance: 1000 MΩ Min. At 500 VDC
Withstand Voltage: 1000 VAC for 1 minute
Current Rating: 2 AMP
Volatge Rating: 250 VAC
Operating Temperature: -55 ° C ~ +105 ° C

Material:

Insulator: Glass-filled thermoplastic PBT UL94V-0
Contacts: Male-Brass / Female-Phosphor Bronze
Plating: full gold or selected gold in mating area.

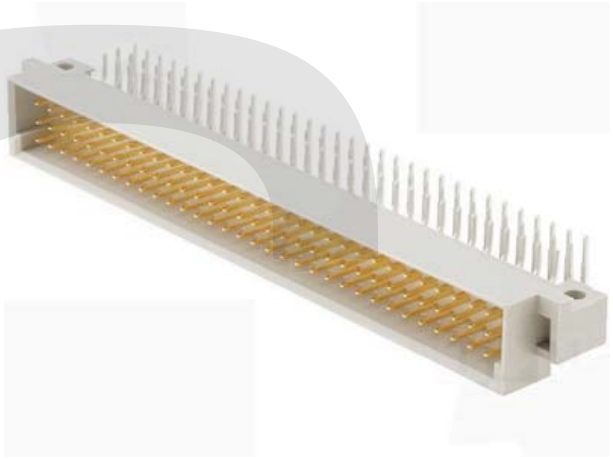

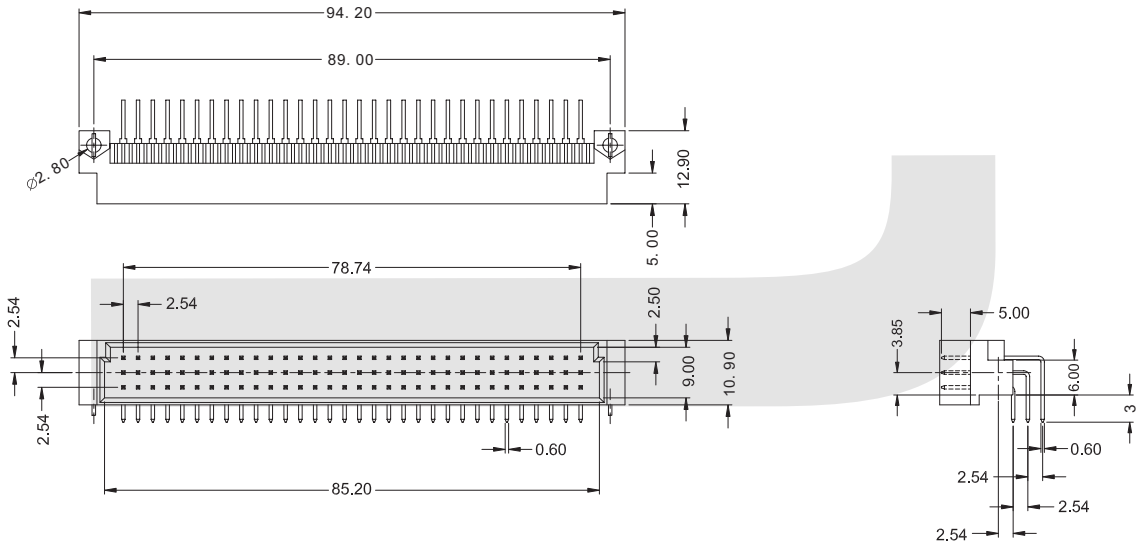

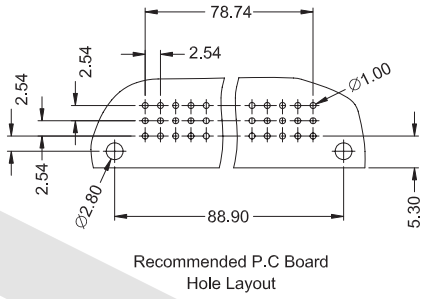

Recommended P.C Board
Hole Layout

Pitch	Position	Rows with Contacts	Contact Arrange	Part Number
2.54mm	96	a b c	4 3 2 1	3396
	64	a - c	4 3 2 1	3264
5.08mm	48	a b c	4 3 2 1	3348
	32	a - c	4 3 2 1	3232

ORDER INFORMATION

Product No.: KLS1-D3-3396-MR

Pos. No.
3X32Pin 3 row Long Type
Part Number:3396 / 3264 / 3348 / 3232
Tail Style:S -4.0mm Straight pin
W1-13mm Straight pin
R -Right pin
Contact Type:M=Male Plug
F=Female Receptacle

DIN 41612 Series

KLS1-D3 3X32Pin 3 row Long C Type

Electrical:

Contact Resistance: 30 mΩ Max. Insulator
Insulation Resistance: 1000 MΩ Min. At 500 VDC
Withstand Voltage: 1000 VAC for 1 minute
Current Rating: 2 AMP
Volatge Rating: 250 VAC
Operating Temperature: -55 ° C ~ +105 ° C

Material:

Insulator: Glass-filled thermoplastic PBT UL94V-0
Contacts: Male-Brass / Female-Phosphor Bronze
Plating: full gold or selected gold in mating area.

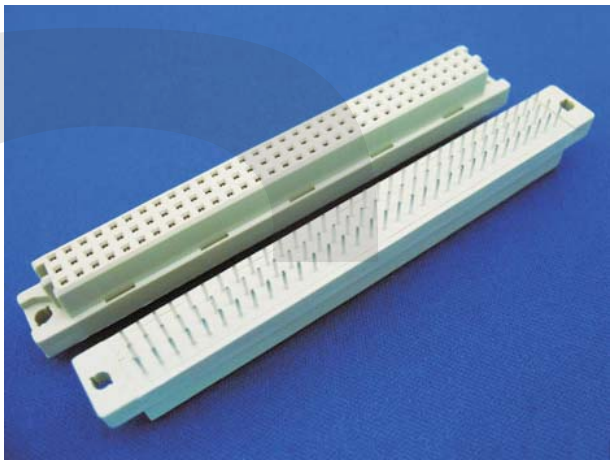

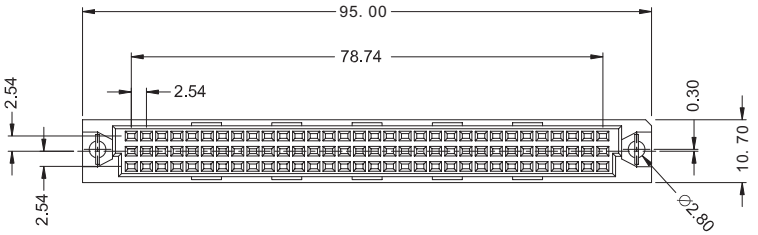

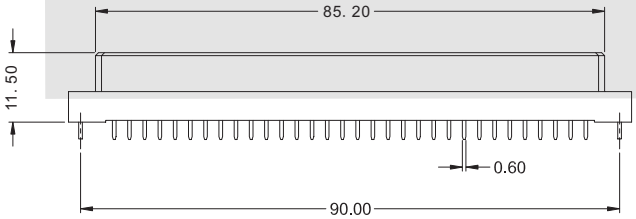

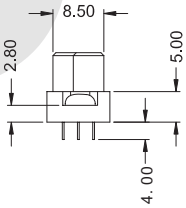

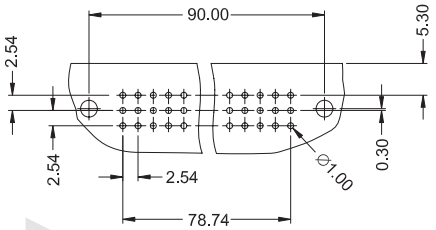

Recommended P.C Board
Hole Layout

Pitch	Position	Rows with Contacts	Contact Arrange	Part Number
2.54mm	96	a b c	4 3 2 1	3396
	64	a - c	4 3 2 1	3264
5.08mm	48	a b c	4 3 2 1	3348
	32	a - c	4 3 2 1	3232

ORDER INFORMATION

Product No.: KLS1-D3-3396-F S

- Pos. No. — 3X32Pin 3 row Long Type
- Part Number: 3396 / 3264 / 3348 / 3232
- Contact Type: M=Male Plug, F=Female Receptacle
- Tail Style: S -4.0mm Straight pin, W1-13mm Straight pin, R -Right pin

DIN 41612 Series

KLS1-D3 3X32Pin 3 row Long C Type

Electrical:

Contact Resistance: 30 mΩ Max. Insulator
Insulation Resistance: 1000 MΩ Min. At 500 VDC
Withstand Voltage: 1000 VAC for 1 minute
Current Rating: 2 AMP
Volatge Rating: 250 VAC
Operating Temperature: -55 ° C ~ +105 ° C

Material:

Insulator: Glass-filled thermoplastic PBT UL94V-0
Contacts: Male-Brass / Female-Phosphor Bronze
Plating: full gold or selected gold in mating area.

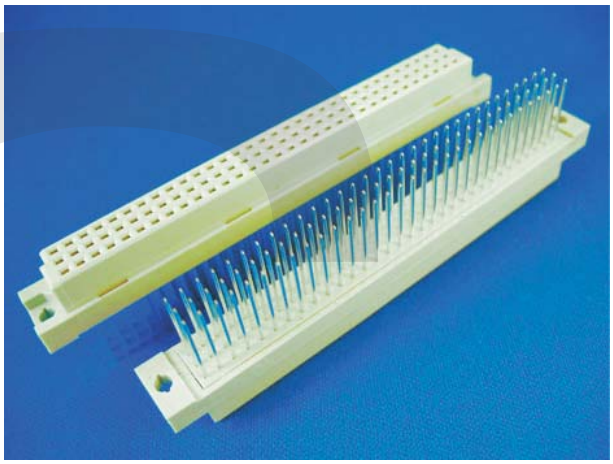

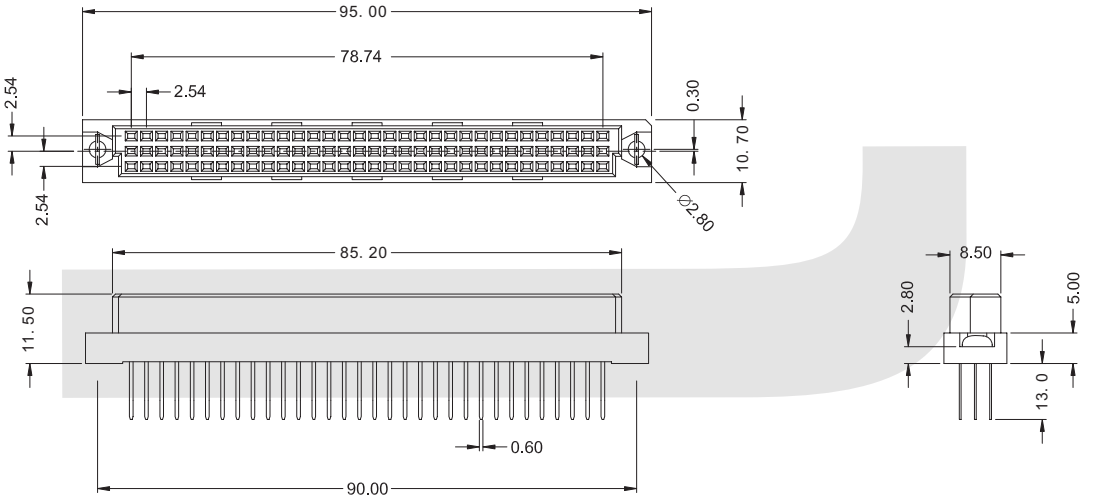

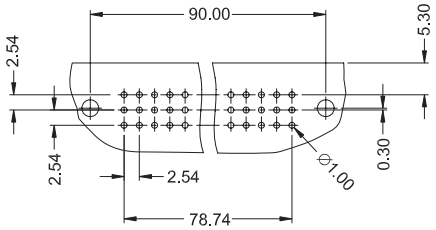

Recommended P.C Board
Hole Layout

Pitch	Position	Rows with Contacts	Contact Arrange	Part Number
2.54mm	96	a b c		3396
	64	a - c		3264
5.08mm	48	a b c		3348
	32	a - c		3232

ORDER INFORMATION

Product No.: KLS1-D3-3396-F W1

Pos. No.
3X32Pin 3 row Long Type
Part Number:3396 / 3264 / 3348 / 3232
Contact Type:M=Male Plug
F=Female Receptacle
Tail Style:S -4.0mm Straight pin
W1-13mm Straight pin
R -Right pin

DIN 41612 Series

KLS1-D3 3X32Pin 3 row Long R Type

Electrical:

Contact Resistance: 30 mΩ Max. Insulator
Insulation Resistance: 1000 MΩ Min. At 500 VDC
Withstand Voltage: 1000 VAC for 1 minute
Current Rating: 2 AMP
Volatge Rating: 250 VAC
Operating Temperature: -55 ° C ~ +105 ° C

Material:

Insulator: Glass-filled thermoplastic PBT UL94V-0
Contacts: Male-Brass / Female-Phosphor Bronze
Plating: full gold or selected gold in mating area.

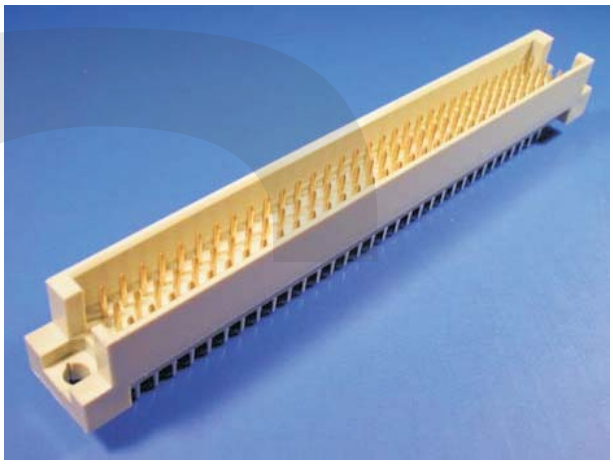

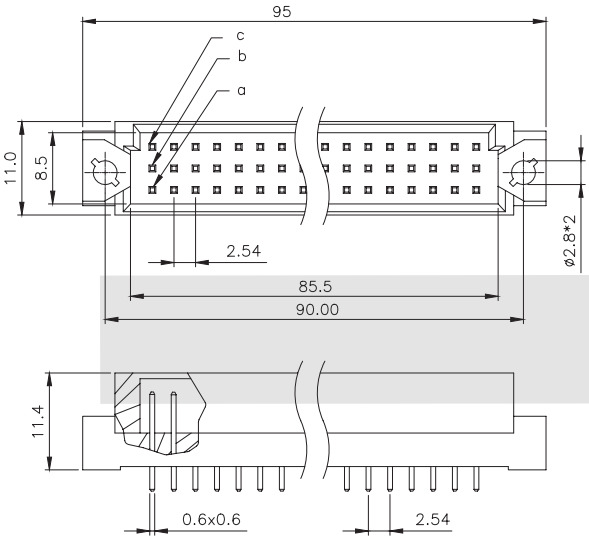

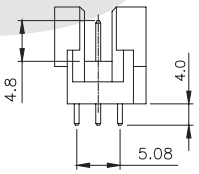

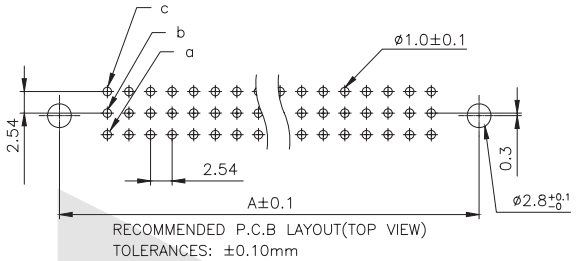

Pitch	Position	Rows with Contacts	Contact Arrange	Part Number
2.54mm	96	a b c		3396
	64	a - c		3264
5.08mm	48	a b c		3348
	32	a - c		3232

ORDER INFORMATION

Product No.: KLS1-D3-3396-MS

Pos. No.
3X32Pin 3 row Long Type
Part Number:3396 / 3264 / 3348 / 3232
Tail Style:S -4.0mm Straight pin
W1-13mm Straight pin
R -Right pin
Contact Type:M=Male Plug
F=Female Receptacle

I

DIN 41612 Series

KLS1-D3 3X32Pin 3 row Long R Type

Electrical:

Contact Resistance: 30 mΩ Max. Insulator
Insulation Resistance: 1000 MΩ Min. At 500 VDC
Withstand Voltage: 1000 VAC for 1 minute
Current Rating: 2 AMP
Volatge Rating: 250 VAC
Operating Temperature: -55 ° C ~ +105 ° C

Material:

Insulator: Glass-filled thermoplastic PBT UL94V-0
Contacts: Male-Brass / Female-Phosphor Bronze
Plating: full gold or selected gold in mating area.

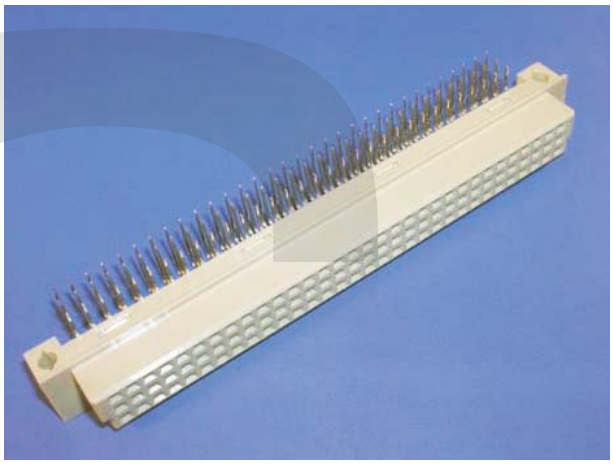

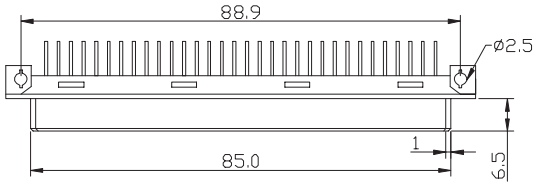

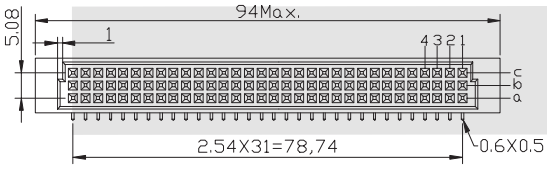

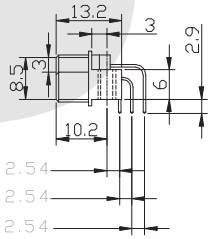

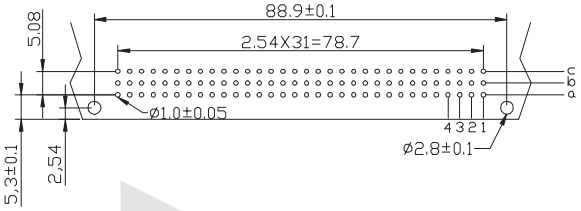

P.C. Board Layout

Pitch	Position	Rows with Contacts	Contact Arrange	Part Number
2.54mm	96	a b c		3396
	64	a - c		3264
5.08mm	48	a b c		3348
	32	a - c		3232

ORDER INFORMATION

Product No.: KLS1-D3-3396-F R

Pos. No.
3X32Pin 3 row Long Type
Part Number:3396 / 3264 / 3348 / 3232
Tail Style:S -4.0mm Straight pin
W1-13mm Straight pin
R -Right pin
Contact Type:M=Male Plug
F=Female Receptacle

I

DIN 41612 Series

KLS1-D3 3X32Pin 3 row Long R Type

Electrical:

Contact Resistance: 30 mΩ Max. Insulator
Insulation Resistance: 1000 MΩ Min. At 500 VDC
Withstand Voltage: 1000 VAC for 1 minute
Current Rating: 2 AMP
Volatge Rating: 250 VAC
Operating Temperature: -55 ° C ~ +105 ° C

Material:

Insulator: Glass-filled thermoplastic PBT UL94V-0
Contacts: Male-Brass / Female-Phosphor Bronze
Plating: full gold or selected gold in mating area.

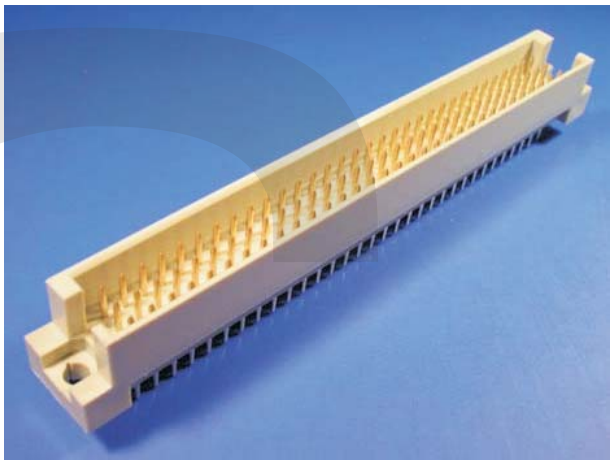

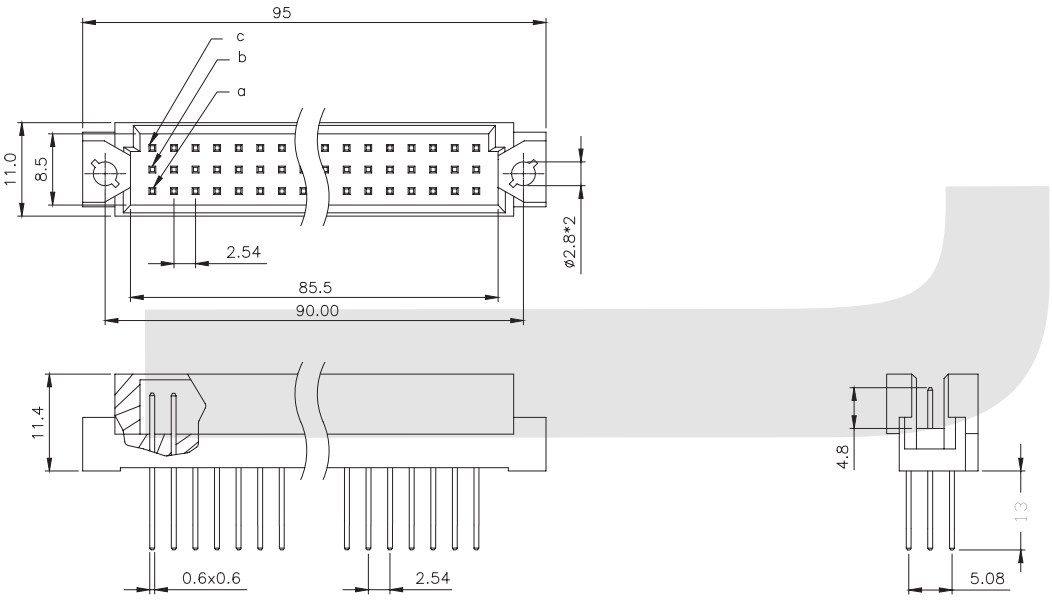

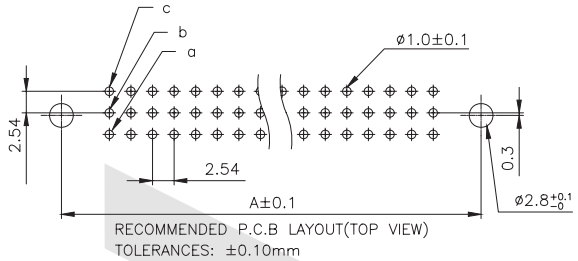

Pitch	Position	Rows with Contacts	Contact Arrange	Part Number
2.54mm	96	a b c	4 3 2 1	3396
	64	a - c	4 3 2 1	3264
5.08mm	48	a b c	4 3 2 1	3348
	32	a - c	4 3 2 1	3232

ORDER INFORMATION

Product No.: KLS1-D3-3396-M W1

Pos. No.
3X32Pin 3 row Long Type
Part Number:3396 / 3264 / 3348 / 3232
Tail Style:S -4.0mm Straight pin
W1-13mm Straight pin
R -Right pin
Contact Type:M=Male Plug
F=Female Receptacle

DIN 41612 Series

KLS1-D3Q 3x10Pin 3 row Short C Type

Electrical:

Contact Resistance: 30 mΩ Max. Insulator
Insulation Resistance: 1000 MΩ Min. At 500 VDC
Withstand Voltage: 1000 VAC for 1 minute
Current Rating: 2 AMP
Volatge Rating: 250 VAC
Operating Temperature: -55 ° C ~ +105 ° C

Material:

Insulator: Glass-filled thermoplastic PBT UL94V-0
Contacts: Male-Brass / Female-Phosphor Bronze
Plating: full gold or selected gold in mating area.

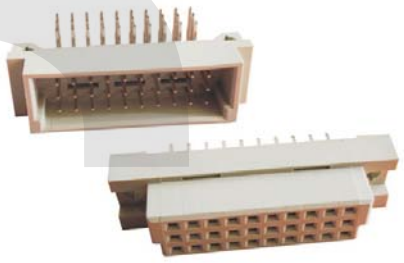

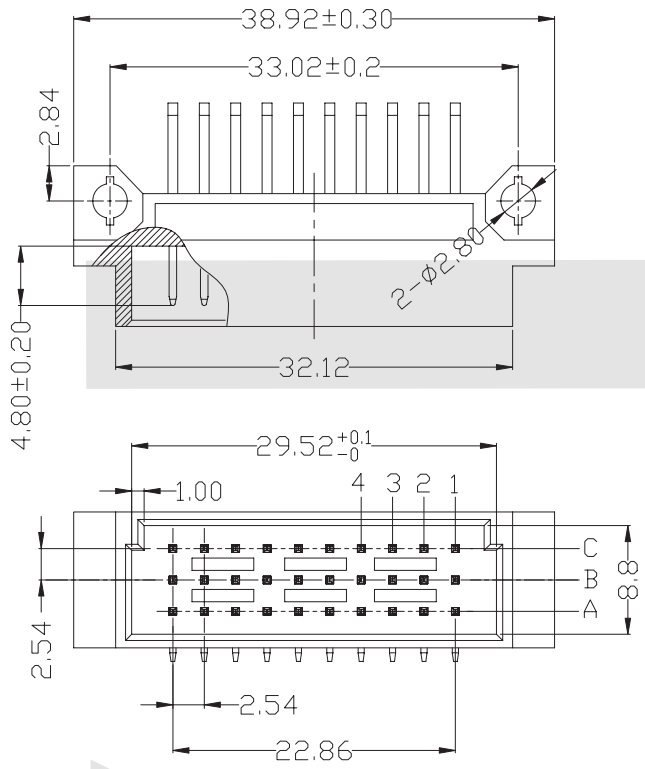

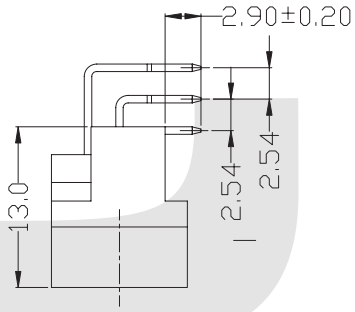

Pitch	Position	Rows with Contacts	Contact Arrange	Part Number
2.54mm	30	a b c		3330
	20	a - c		3220
	20	a b -		3220A
	10	a - -		3110
5.08mm	15	a b c		3315
	10	a - c		3210
	10	a b -		3210A
	5	a - -		3105

ORDER INFORMATION

Product No.: KLS1-D3Q-3330-MR

- Pos. No. — 3x10Pin 3 row Short Type
- Part Number: 3330 / 3315/ 3220 / 3210 / 3110/3105
- Tail Style: S -4.0mm Straight pin; W1-13mm Straight pin; R -Right pin
- Contact Type: M=Male Plug; F=Female Receptacle

DIN 41612 Series

KLS1-D3Q 3x10Pin 3 row Short C Type

Electrical:

Contact Resistance: 30 mΩ Max. Insulator
Insulation Resistance: 1000 MΩ Min. At 500 VDC
Withstand Voltage: 1000 VAC for 1 minute
Current Rating: 2 AMP
Volatge Rating: 250 VAC
Operating Temperature: -55 ° C ~ +105 ° C

Material:

Insulator: Glass-filled thermoplastic PBT UL94V-0
Contacts: Male-Brass / Female-Phosphor Bronze
Plating: full gold or selected gold in mating area.

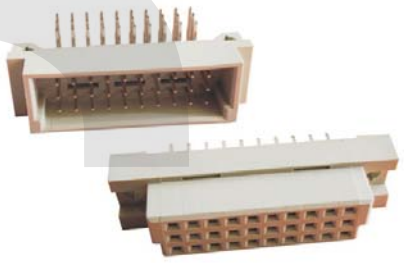

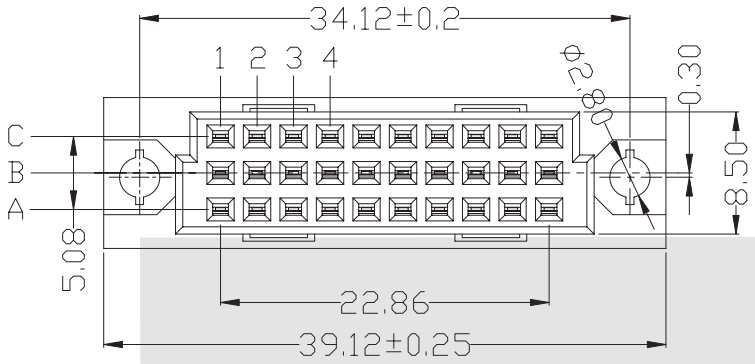

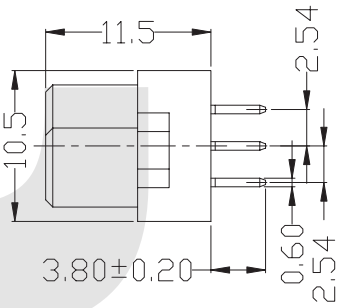

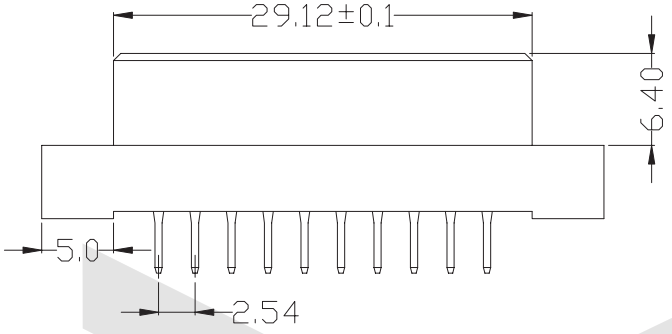

Pitch	Position	Rows with Contacts	Contact Arrange	Part Number
2.54mm	30	a b c		3330
	20	a - c		3220
	20	a b -		3220
	10	a - -		3110
5.08mm	15	a b c		3315
	10	a - c		3210
	10	a b -		3210
	5	a - -		3105

ORDER INFORMATION

Product No.: KLS1-D3Q-3330-F S

- Pos. No. / 3x10Pin 3 row Short Type
- Part Number: 3330 / 3315/ 3220 / 3210 / 3110/3105
- Contact Type: M=Male Plug, F=Female Receptacle
- Tail Style: S -4.0mm Straight pin, W1-13mm Straight pin, R -Right pin

DIN 41612 Series

KLS1-D3X 3x16Pin 3 row Short C Type

Electrical:

Contact Resistance: 30 mΩ Max. Insulator
Insulation Resistance: 1000 MΩ Min. At 500 VDC
Withstand Voltage: 1000 VAC for 1 minute
Current Rating: 2 AMP
Volatge Rating: 250 VAC
Operating Temperature: -55 ° C ~ +105 ° C

Material:

Insulator: Glass-filled thermoplastic PBT UL94V-0
Contacts: Male-Brass / Female-Phosphor Bronze
Plating: full gold or selected gold in mating area.

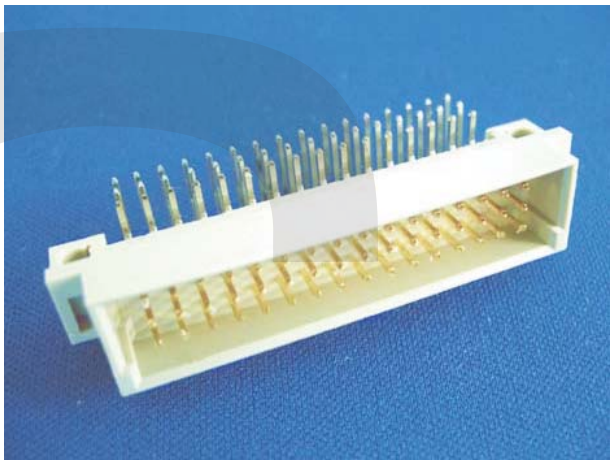

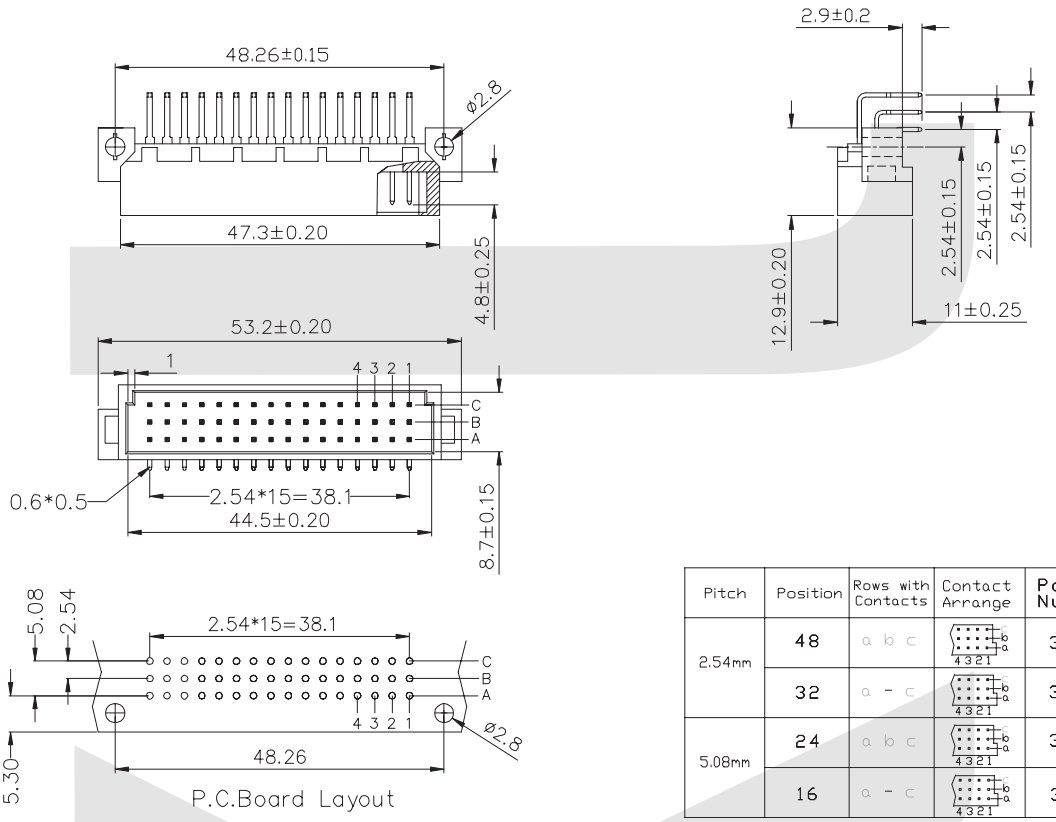

Pitch	Position	Rows with Contacts	Contact Arrange	Part Number
2.54mm	48	a b c	4321	3348
	32	a - c	4321	3232
5.08mm	24	a b c	4321	3324
	16	a - c	4321	3216

ORDER INFORMATION

Product No.: KLS1-D3X-3348-MR

Pos. No.
3x16Pin 3 row Short Type
Part Number:3348 / 3232 / 3324 / 3216
Tail Style:S -4.0mm Straight pin
W1-13mm Straight pin
R -Right pin
Contact Type:M=Male Plug
F=Female Receptacle

I

DIN 41612 Series

KLS1-D3X 3x16Pin 3 row Short C Type

Electrical:
Contact Resistance: 30 mΩ Max. Insulator
Insulation Resistance: 1000 MΩ Min. At 500 VDC
Withstand Voltage: 1000 VAC for 1 minute
Current Rating: 2 AMP
Volatge Rating: 250 VAC
Operating Temperature: -55 ° C ~ +105 ° C

Material:
Insulator: Glass-filled thermoplastic PBT UL94V-0
Contacts: Male-Brass / Female-Phosphor Bronze
Plating: full gold or selected gold in mating area.

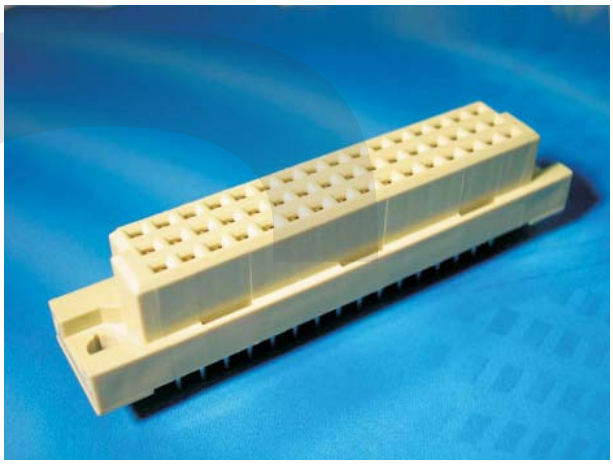

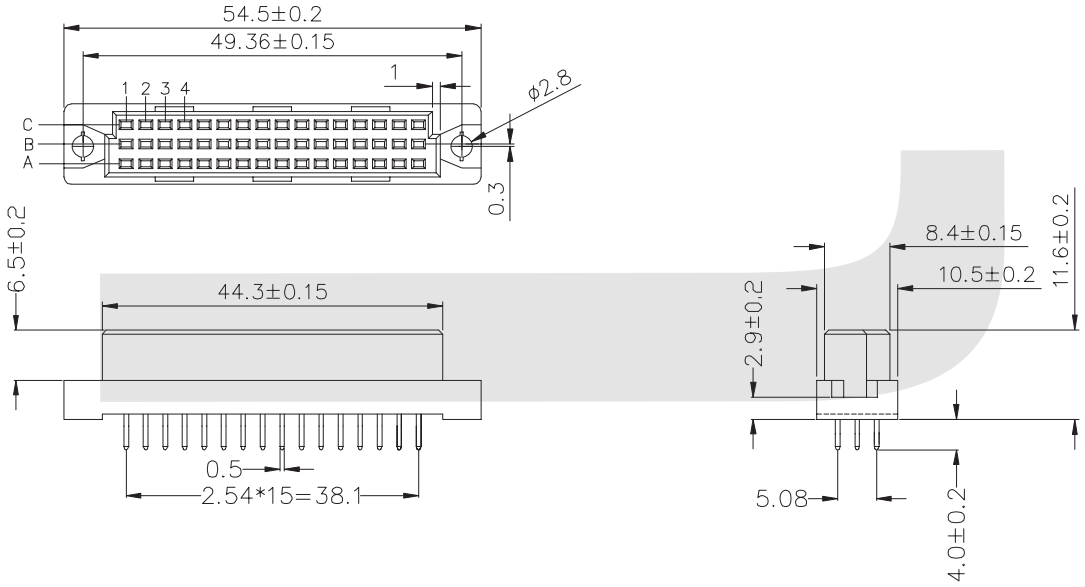

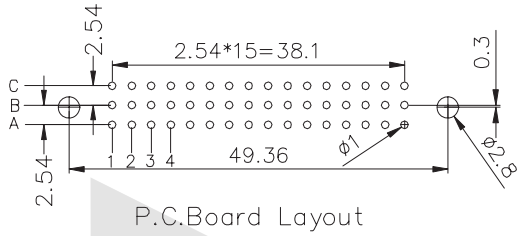

P.C.Board Layout

Pitch	Position	Rows with Contacts	Contact Arrange	Part Number
2.54mm	48	a b c		3348
	32	a - c		3232
5.08mm	24	a b c		3324
	16	a - c		3216

ORDER INFORMATION

Product No.: KLS1-D3X-3348-F S

Pos. No.
3x16Pin 3 row Short Type
Part Number:3348 / 3232 / 3324 / 3216

Tail Style:S -4.0mm Straight pin
W1-13mm Straight pin
R -Right pin

Contact Type:M=Male Plug
F=Female Receptacle

I

DIN 41612 Series

KLS1-D3X 3x16Pin 3 row Short C Type

Electrical:

Contact Resistance: 30 mΩ Max. Insulator
Insulation Resistance: 1000 MΩ Min. At 500 VDC
Withstand Voltage: 1000 VAC for 1 minute
Current Rating: 2 AMP
Volatge Rating: 250 VAC
Operating Temperature: -55 ° C ~ +105 ° C

Material:

Insulator: Glass-filled thermoplastic PBT UL94V-0
Contacts: Male-Brass / Female-Phosphor Bronze
Plating: full gold or selected gold in mating area.

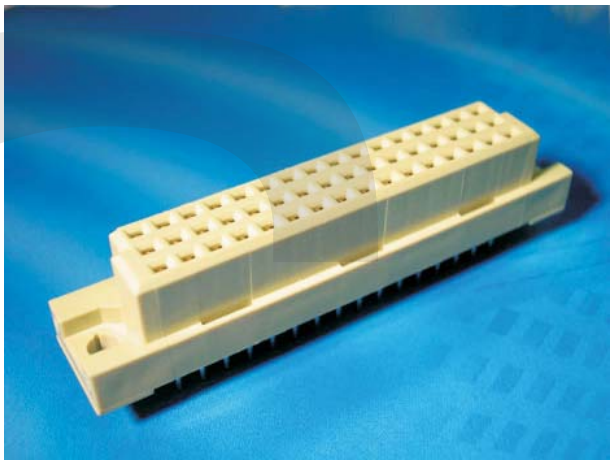

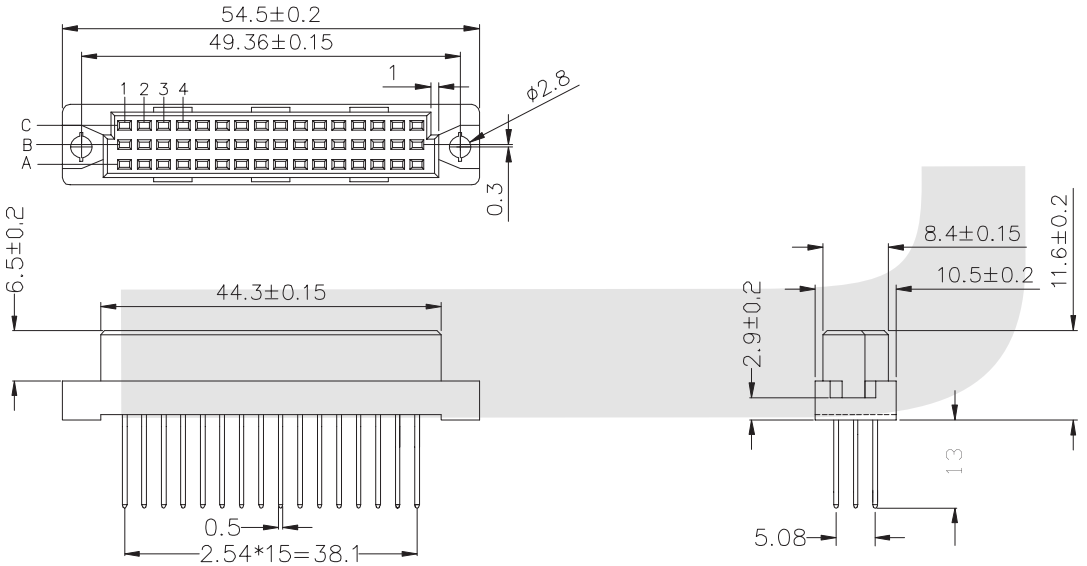

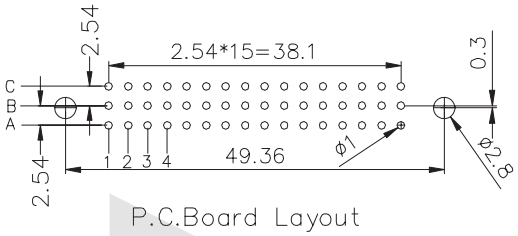

P.C.Board Layout

Pitch	Position	Rows with Contacts	Contact Arrange	Part Number
2.54mm	48	a b c	4 3 2 1	3348
	32	a - c	4 3 2 1	3232
5.08mm	24	a b c	4 3 2 1	3324
	16	a - c	4 3 2 1	3216

ORDER INFORMATION

Product No.: KLS1-D3-3396-F W1

Pos. No.
3X32Pin 3 row Long Type
Part Number:3396 / 3264 / 3348 / 3232
Contact Type:M=Male Plug
F=Female Receptacle
Tail Style:S -4.0mm Straight pin
W1-13mm Straight pin
R -Right pin

I

DIN 41612 Series

KLS1-D3X 3x16Pin 3 row Short R Type

Electrical:
Contact Resistance: 30 mΩ Max. Insulator
Insulation Resistance: 1000 MΩ Min. At 500 VDC
Withstand Voltage: 1000 VAC for 1 minute
Current Rating: 2 AMP
Volatge Rating: 250 VAC
Operating Temperature: -55 ° C ~ +105 ° C

Material:
Insulator: Glass-filled thermoplastic PBT UL94V-0
Contacts: Male-Brass / Female-Phosphor Bronze
Plating: full gold or selected gold in mating area.

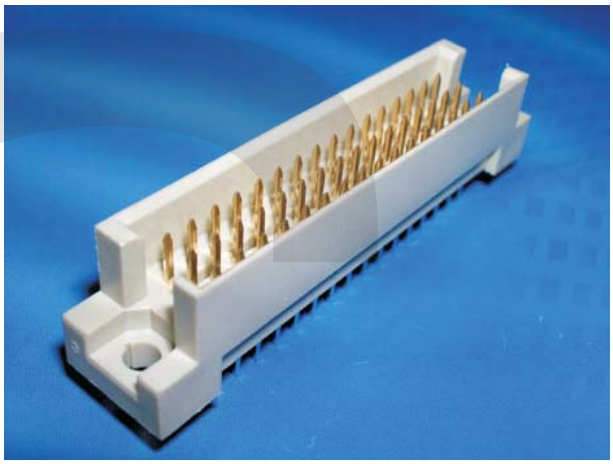

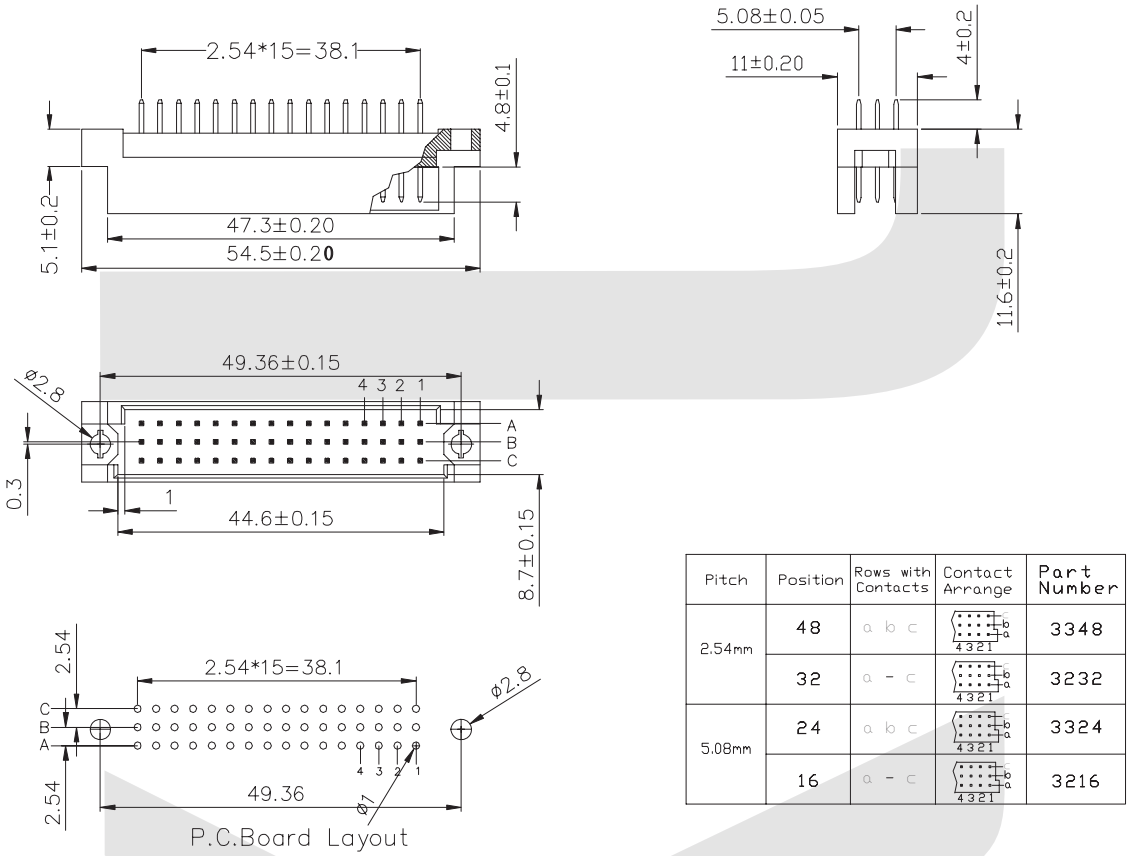

Pitch	Position	Rows with Contacts	Contact Arrange	Part Number
2.54mm	48	a b c		3348
	32	a - c		3232
5.08mm	24	a b c		3324
	16	a - c		3216

ORDER INFORMATION

Product No.: KLS1-D3X-3348-MS

Pos. No.
3x16Pin 3 row Short Type
Part Number:3348 / 3232 / 3324 / 3216

Tail Style:S -4.0mm Straight pin
W1-13mm Straight pin
R -Right pin
Contact Type:M=Male Plug
F=Female Receptacle

I

DIN 41612 Series

KLS1-D3X 3x16Pin 3 row Short R Type

Electrical:
Contact Resistance: 30 mΩ Max. Insulator
Insulation Resistance: 1000 MΩ Min. At 500 VDC
Withstand Voltage: 1000 VAC for 1 minute
Current Rating: 2 AMP
Volatge Rating: 250 VAC
Operating Temperature: -55 ° C ~ +105 ° C

Material:
Insulator: Glass-filled thermoplastic PBT UL94V-0
Contacts: Male-Brass / Female-Phosphor Bronze
Plating: full gold or selected gold in mating area.



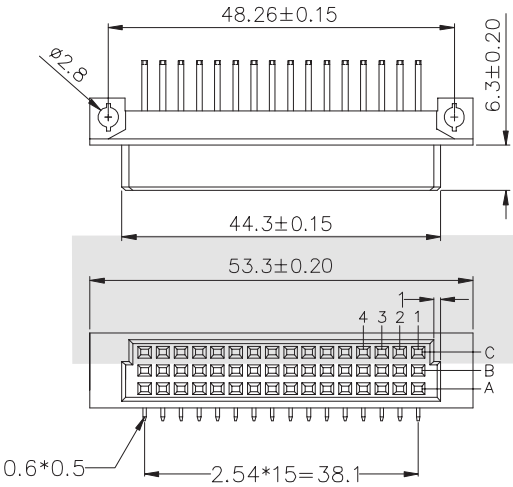

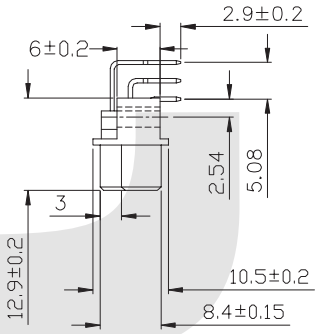

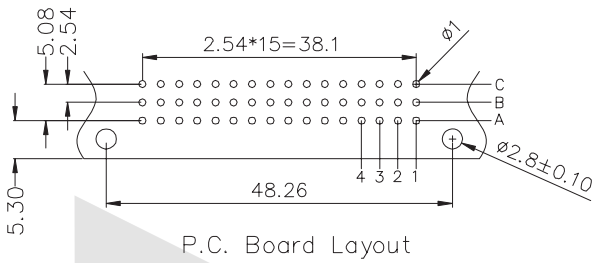

P.C. Board Layout

Pitch	Position	Rows with Contacts	Contact Arrange	Part Number
2.54mm	48	a b c	4 3 2 1	3348
	32	a - c	4 3 2 1	3232
5.08mm	24	a b c	4 3 2 1	3324
	16	a - c	4 3 2 1	3216

ORDER INFORMATION

Product No.: KLS1-D3X-3348-F R

Pos. No.
3x16Pin 3 row Short Type
Part Number:3348 / 3232 / 3324 / 3216
Tail Style:S -4.0mm Straight pin
W1-13mm Straight pin
R -Right pin
Contact Type:M=Male Plug
F=Female Receptacle

DIN 41612 Series

KLS1-D3X 3x16Pin 3 row Short R Type

Electrical:

Contact Resistance: 30 mΩ Max. Insulator
Insulation Resistance: 1000 MΩ Min. At 500 VDC
Withstand Voltage: 1000 VAC for 1 minute
Current Rating: 2 AMP
Volatge Rating: 250 VAC
Operating Temperature: -55 ° C ~ +105 ° C

Material:

Insulator: Glass-filled thermoplastic PBT UL94V-0
Contacts: Male-Brass / Female-Phosphor Bronze
Plating: full gold or selected gold in mating area.

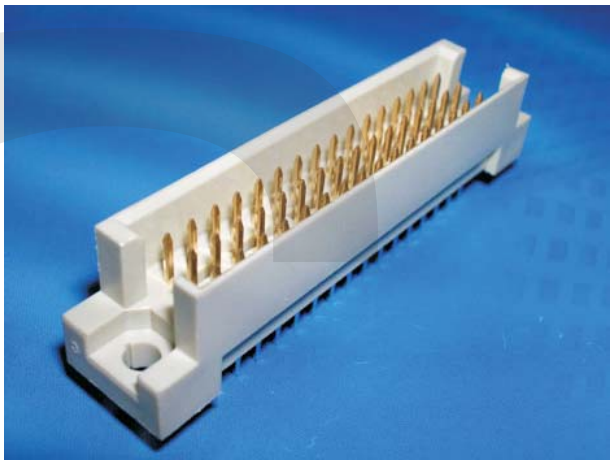

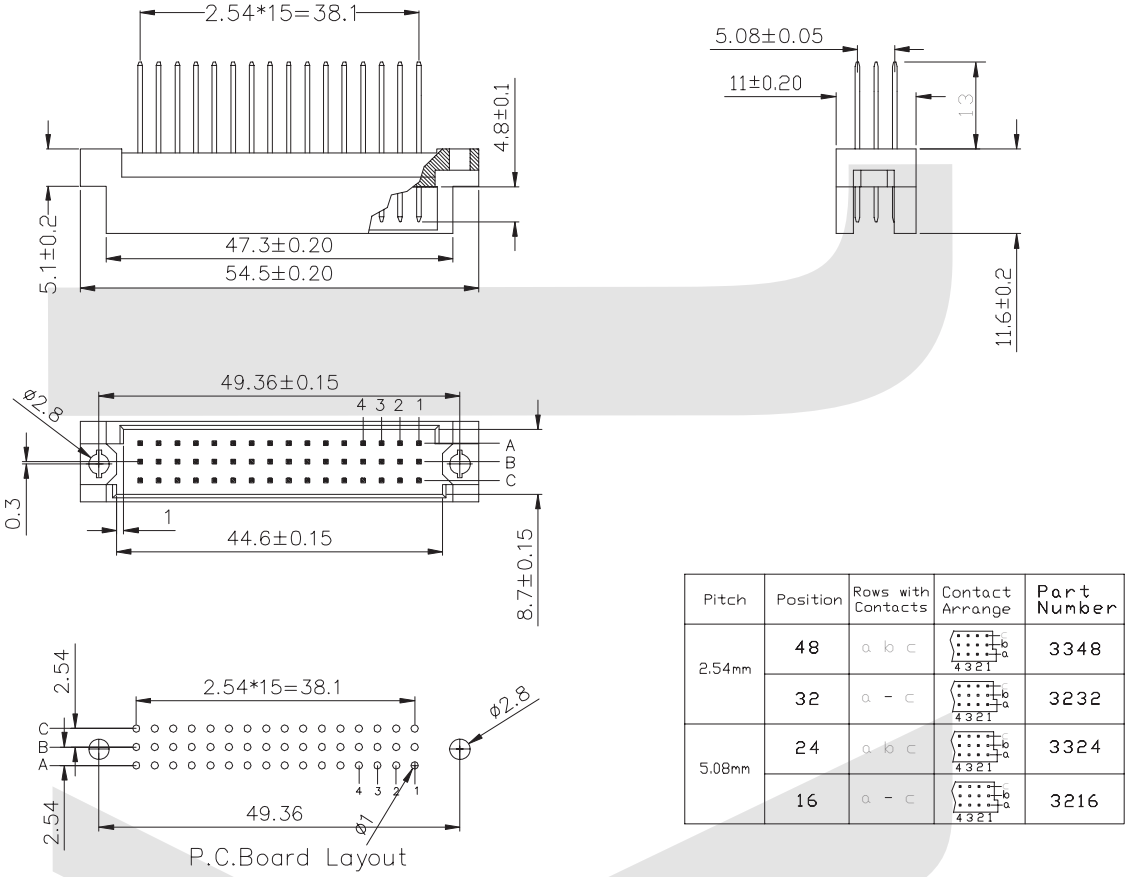

Pitch	Position	Rows with Contacts	Contact Arrange	Part Number
2.54mm	48	a b c		3348
	32	a - c		3232
5.08mm	24	a b c		3324
	16	a - c		3216

ORDER INFORMATION

Product No.: KLS1-D3X-3348-M W1

Pos. No.
3x16Pin 3 row Short Type
Part Number:3348 / 3232 / 3324 / 3216
Tail Style:S -4.0mm Straight pin
W1-13mm Straight pin
R -Right pin
Contact Type:M=Male Plug
F=Female Receptacle

I

DIN 41612 Series

KLS1-F48 3x16Pin 3 row Short Type

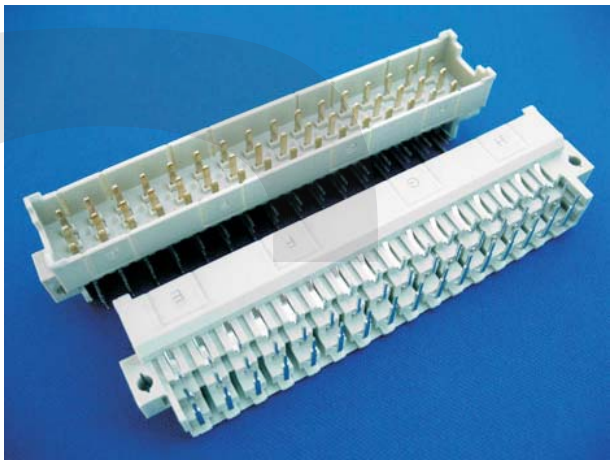

Electrical:

Contact Resistance: 30 mΩ Max. Insulator
Insulation Resistance: 1000 MΩ Min. At 500 VDC
Withstand Voltage: 1000 VAC for 1 minute
Current Rating: 2 AMP
Volatge Rating: 250 VAC
Operating Temperature: -55 ° C ~ +105 ° C

Material:

Insulator: Glass-filled thermoplastic PBT UL94V-0
Contacts: Male-Brass / Female-Phosphor Bronze
Plating: full gold or selected gold in mating area.

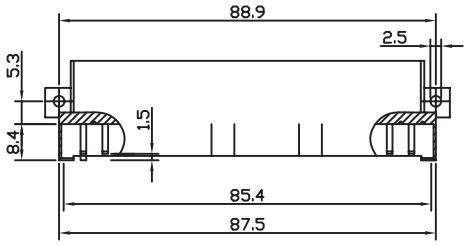

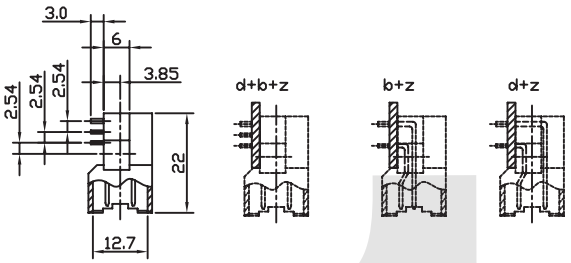

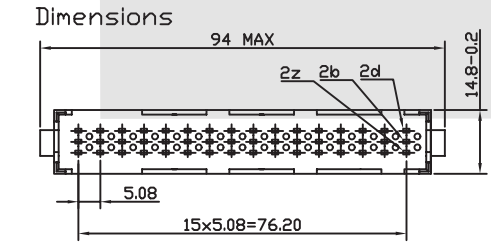

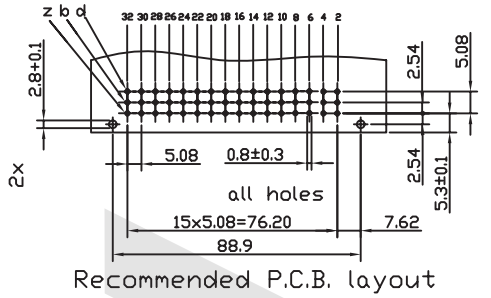

Part Number	Number of contacts	Contact Arrangement	Rows With Contacts	Peference Part Number
3348	48		d+b+z	09 06 148 6901
3232A	32		b+z	09 06 132 6901
3232B	32		d+z	09 06 132 6931
3347+1	47+1		d+b+z z32 Prt-mating	09 06 148 6921
3231+1	31+1		b+z z32 Prt-mating	09 06 132 6921

ORDER INFORMATION

Product No.: KLS1-F48-3348-MR

Pos. No.
3x16Pin 3 row Short Type
Part Number:3348 / 3232A/ 3232B / 3347+1 /3231+1
Tail Style:S -4.0mm Straight pin
R -Right pin
Contact Type:M=Male Plug
F=Female Receptacle

DIN 41612 Series

KLS1-F48 3x16Pin 3 row Short Type

Electrical:

Contact Resistance: 30 mΩ Max. Insulator
Insulation Resistance: 1000 MΩ Min. At 500 VDC
Withstand Voltage: 1000 VAC for 1 minute
Current Rating: 2 AMP
Volatge Rating: 250 VAC
Operating Temperature: -55 ° C ~ +105 ° C

Material:

Insulator: Glass-filled thermoplastic PBT UL94V-0
Contacts: Male-Brass / Female-Phosphor Bronze
Plating: full gold or selected gold in mating area.

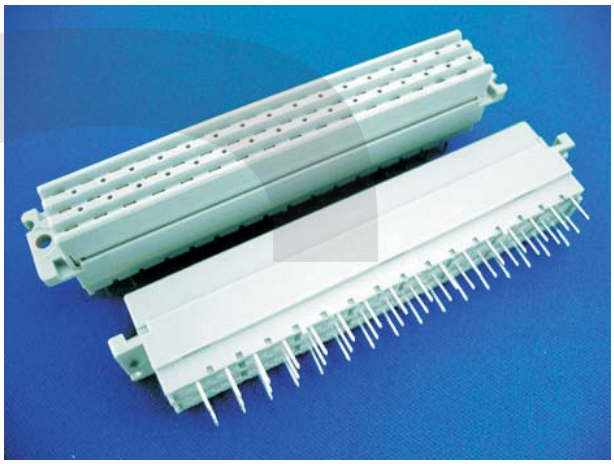

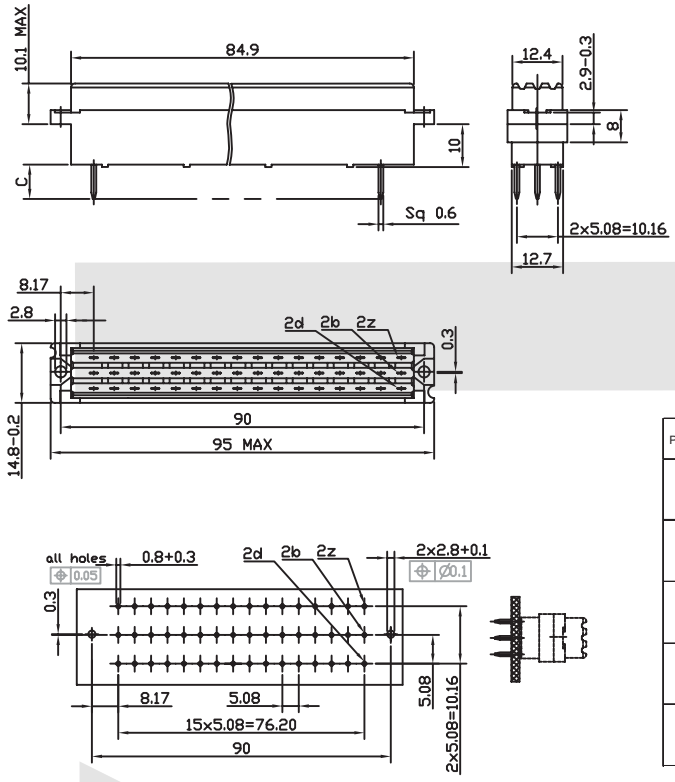

Part Number	Number of contacts	Contact Arrangement	Rows With Contacts	Peference Part Number
3348	48		d+b+z	09 06 148 6901
3232A	32		b+z	09 06 132 6901
3232B	32		d+z	09 06 132 6931
3347+1	47+1		d+b+z z32 Prt-mating	09 06 148 6921
3231+1	31+1		b+z z32 Prt-mating	09 06 132 6921

ORDER INFORMATION

Product No.: KLS1-F48-3348-F S

Pos. No.
3x16Pin 3 row Short Type
Part Number:3348 / 3232A/ 3232B / 3347+1 /3231+1
Tail Style:S -4.0mm Straight pin
R -Right pin
Contact Type:M=Male Plug
F=Female Receptacle

PCB Modular Jack Series

KLS12-117-10P PCB Modular Jack 56 Series

MATERIAL

1. Housing Material : Glass Filled Plyester UL94V-0 PBT、NYLON
2. Housing Color : Black、 Gray、Ivory、 White or Others
3. Contact Material : Phosphor Bronze Φ0. 46mm
4. PLATING: Gold plating over nickel. Gold plating thickness
   1. 5u″/3u″/6u″/15u″/30u″/50u″
5. SHIELD : 0.23 Thickness Brass with nickel plated

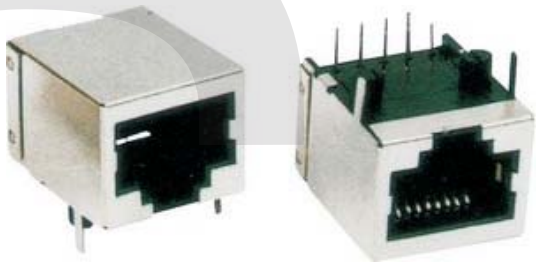

ELECTRICAL

1.Current Rating: 1. 5 Amp
2.Voltage Rating: 125 VAC RMS
3. Contact Resistance : 30 Milliohms Max.
4. Insulation Resistance : 500 Megohms Min @ 500 VDC
5.Dielectric Withstanding Voltage: 1000VAC RMS 50Hz 1 minute

MECHANICAL

1. DURABILITY : 750 CYCLES MIN
2. PCB RETENTION PRE-SOLDER : 1 LB MIN

ENVIRONMENTAL

1. STORAGE :-40°C~+80°C
2.OPERATION:-40°C~+70°C

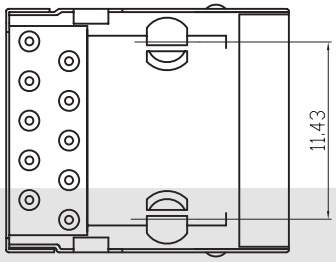

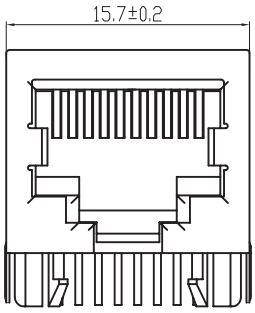

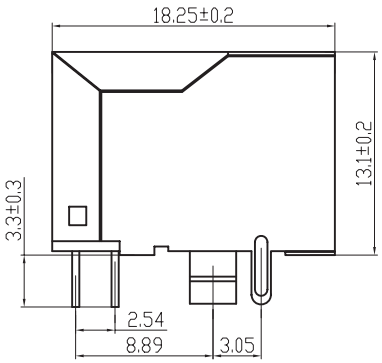

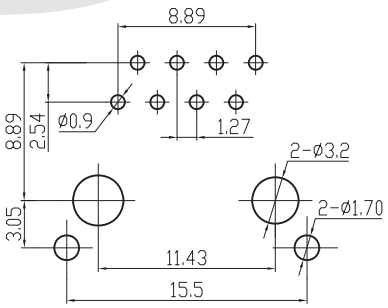

PC Board Layout

ORDER INFORMATION

KLS12-117 - 10P8C-1x1- W - F -XX-X

Part Number	Point NO.	Ports	Shield	Peg/TAB	Gold Thickness	Plastic
	10P10C Point 10P8C Point	1x1-1 Ports 1x2-2 Ports 1x4-4 Ports 1x8-8 Ports	W-With Shield E-Shield With EMI	0-W/O Peg 1-Front Peg 3.05 2-Front Peg 3.68 3-Front Peg 4.57 4-Back Peg 3.05	01-Fu" 02-3u" 03-6u" 04-15u" 05-30u" 06-50u	1-Nylon 2-PBT 3-ABS

PCB Modular Jack Series

KLS12-117-10P PCB Modular Jack 56 Series 1x2 Ports

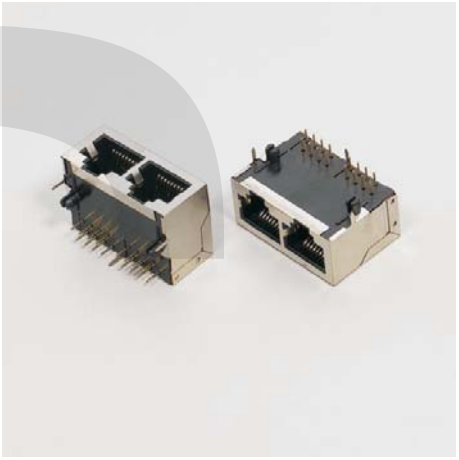

MATERIAL

1.Housing Material : Glass Filled Polyester UL94V-0 PBT, NYLON
2.Housing Color : Black, Gray, Ivory, White or others
3.Contact Material : Phosphor Bronze Φ0.46mm
4.PLATING: Gold plating over nickel. Gold plating thickness
1.5u″/3u″/6u″/15u″/30u″/50u″
5. SHIELD : 0.23 Thickness Brass with Nickel Plated

ELECTRICAL

1.Current Rating:1.5Amp
2.Voltage Rating:125VAC
3.Contact Resistance : 30MΩ Max.
4.Insulation Resistance : 500 MΩ Min @500VDC
5.Withstanding Voltage: 1000VAC RMS 50Hz 1 minute

MECHANICAL

1.Durability : 750 cycles Min
2.PCB Retention pre-solder : 1 LB Min

ENVIRONMENTAL

1.Storage :-40°C~+80°C
2.Operation:-40°C~+70°C

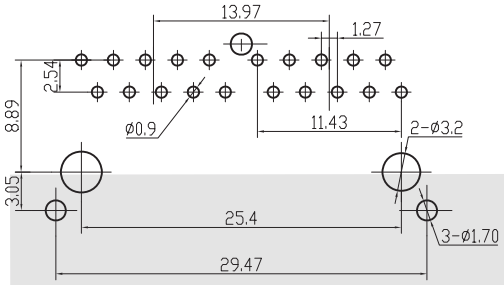

PC Board Layout

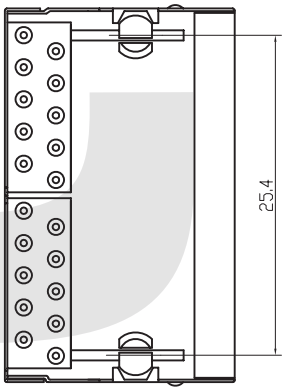

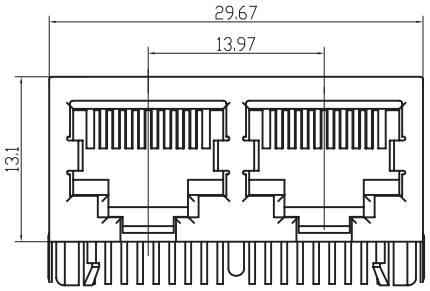

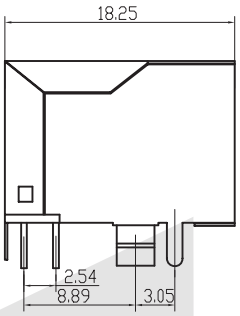

ORDER INFORMATION

KLS12-117 - 10P10C-1x2-XX-X

Part Number	Point NO.	Ports	Gold Thickness	Plastic
	10P10C Point 10P8C Point	1x2-2 Ports 1x4-4 Ports	01-Fu" 02-3u" 03-6u" 04-15u" 05-30u" 06-50u	1-Nylon 2-PBT 3-ABS

PCB Modular Jack Series

KLS12-117-10P PCB Modular Jack 56 Series 1x4 Ports



MATERIAL

1.Housing Material : Glass Filled Polyester UL94V-0 PBT, NYLON
2.Housing Color : Black, Gray, Ivory, White or others
3.Contact Material : Phosphor Bronze Φ0.46mm
4.PLATING: Gold plating over nickel. Gold plating thickness
1.5u″/3u″/6u″/15u″/30u″/50u″
5. SHIELD : 0.23 Thickness Brass with Nickel Plated

ELECTRICAL

1.Current Rating:1.5Amp
2.Voltage Rating:125VAC
3.Contact Resistance : 30MΩ Max.
4.Insulation Resistance : 500 MΩ Min @500VDC
5.Withstanding Voltage: 1000VAC RMS 50Hz 1 minute

MECHANICAL

1.Durability : 750 cycles Min
2.PCB Retention pre-solder : 1 LB Min

ENVIRONMENTAL

1.Storage :-40°C~+80°C
2.Operation:-40°C~+70°C

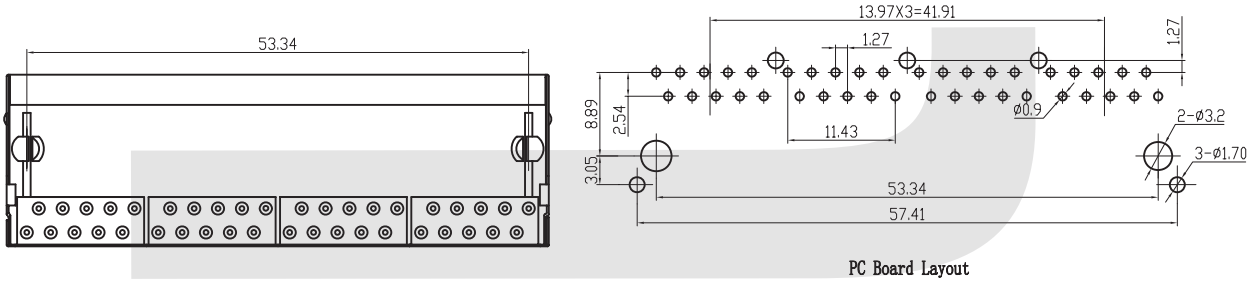

PC Board Layout

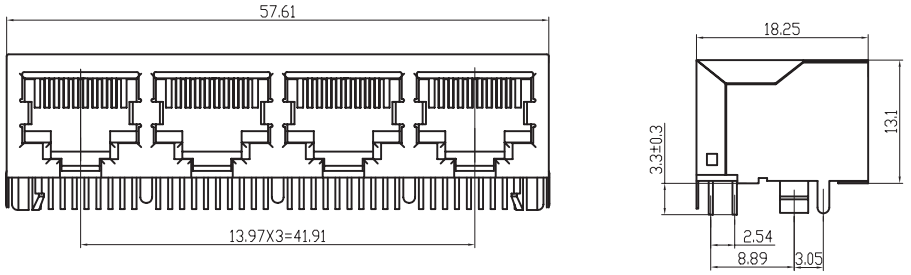

ORDER INFORMATION

KLS12-117 - 10P10C-1x4-XX-X

Part Number	Point NO.	Ports	Gold Thickness	Plastic
	10P10C Point 10P8C Point	1x2-2 Ports 1x4-4 Ports	01-Fu" 02-3u" 03-6u" 04-15u" 05-30u" 06-50u	1-Nylon 2-PBT 3-ABS

PCB Modular Jack Series

KLS12-118-10P PCB Modular Jack 56 Series

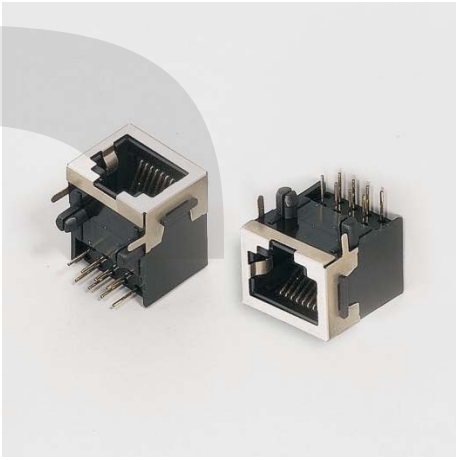

MATERIAL

1.Housing Material: Glass Filled Plyester UL94V-0 PBT, NYLON
2.Housing Color: Black, Gray, Ivory, White or others
3.Contact Material : Phosphor Bronze Φ0. 46mm
4.PLATING: Gold plating over nickel. Gold plating thickness
1.5u″/3u″/6u″/15u″/30u″/50u″
5.SHIELD : 0.23 Thickness Brass with nickel plated

ELECTRICAL

1.Current Rating: 1.5Amp
2.Voltage Rating: 125VAC
3.Contact Resistance : 30MΩ Max.
4.Insulation Resistance : 500MΩ Min.@ 500VDC
5.Dielectric Withstanding Voltage: 1000VAC RMS 50Hz 1 minute

MECHANICAL

1.Durability : 750 cycles Min.
2.PCB Retention pre-solder : 1 LB MIN

ENVIRONMENTAL

1.Storage :-40°C~+80°C
2.Operation:-40°C~+70°C

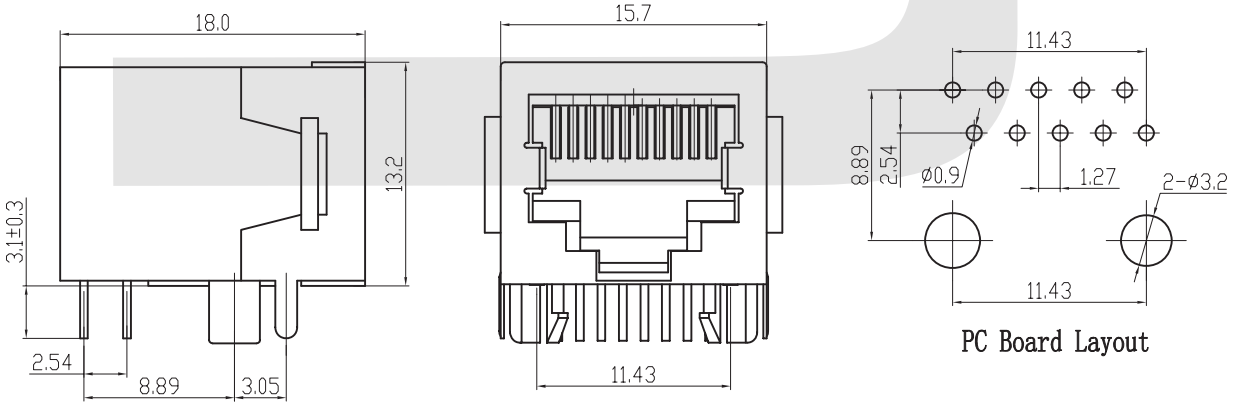

ORDER INFORMATION

KLS12-117 - 10P8C-H-XX-X

Part Number	Point NO.	Shielded	Gold Thickness	Plastic
	10P10C Point 10P8C Point	H-Half Shielded E-Shield With EMI	01-Fu" 02-3u" 03-6u" 04-15u" 05-30u" 06-50u	1-Nylon 2-PBT 3-ABS

PCB Modular Jack Series

XII

KLS12-120-10P PCB Modular Jack 56 Series 1x2 Ports

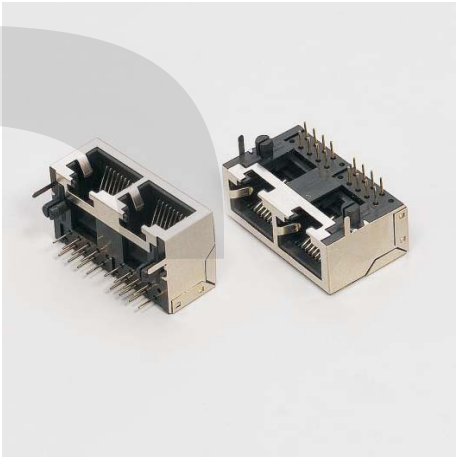

MATERIAL

1.Housing Material : Glass Filled Polyester UL94V-0 PBT, NYLON
2.Housing Color : Black, Gray, Ivory, White or others
3.Contact Material : Phosphor Bronze Φ0.46mm
4.PLATING: Gold plating over nickel. Gold plating thickness
1.5u″/3u″/6u″/15u″/30u″/50u″
5. SHIELD : 0.23 Thickness Brass with Nickel Plated

ELECTRICAL

1.Current Rating:1.5Amp
2.Voltage Rating:125VAC
3.Contact Resistance : 30MΩ Max.
4.Insulation Resistance : 500 MΩ Min @500VDC
5.Withstanding Voltage: 1000VAC RMS 50Hz 1 minute

MECHANICAL

1.Durability : 750 cycles Min
2.PCB Retention pre-solder : 1 LB Min

ENVIRONMENTAL

1.Storage :-40°C~+80°C
2.Operation:-40°C~+70°C

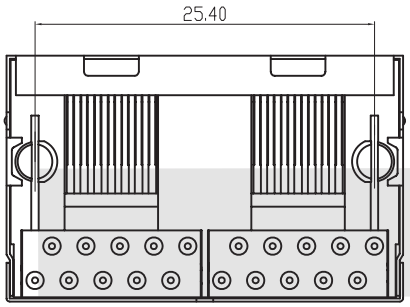

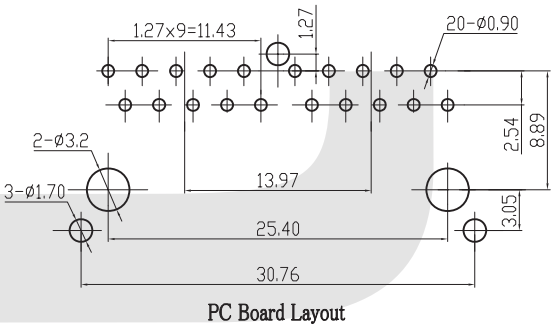

PC Board Layout

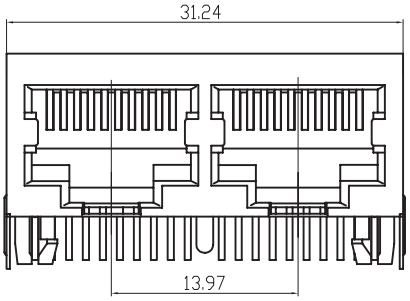

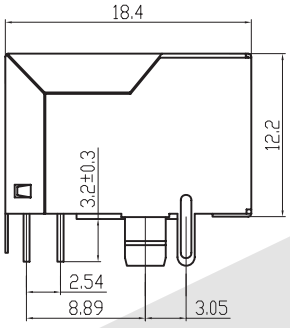

ORDER INFORMATION

KLS12-120 - 10P10C-1x2-XX-X

Part Number	Point NO.	Ports	Gold Thickness	Plastic
	10P10C Point 10P8C Point	1x2-2 Ports 1x4-4 Ports	01-Fu" 02-3u" 03-6u" 04-15u" 05-30u" 06-50u	1-Nylon 2-PBT 3-ABS

PCB Modular Jack Series

KLS12-120-10P PCB Modular Jack 56 Series 1x4 Ports

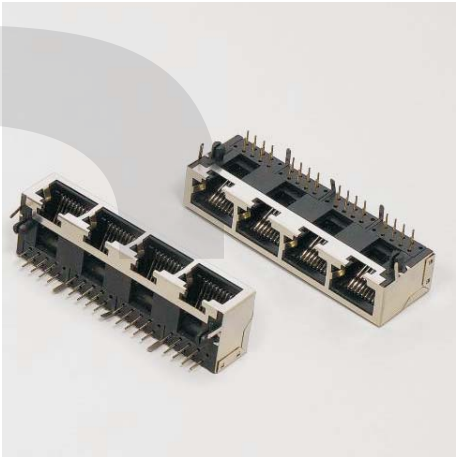

MATERIAL

1.Housing Material : Glass Filled Polyester UL94V-0 PBT, NYLON
2.Housing Color : Black, Gray, Ivory, White or others
3.Contact Material : Phosphor Bronze Φ0.46mm
4.PLATING: Gold plating over nickel. Gold plating thickness
1.5u″/3u″/6u″/15u″/30u″/50u″
5. SHIELD : 0.23 Thickness Brass with Nickel Plated

ELECTRICAL

1.Current Rating:1.5Amp
2.Voltage Rating:125VAC
3.Contact Resistance : 30MΩ Max.
4.Insulation Resistance : 500 MΩ Min @500VDC
5.Withstanding Voltage: 1000VAC RMS 50Hz 1 minute

MECHANICAL

1.Durability : 750 cycles Min
2.PCB Retention pre-solder : 1 LB Min

ENVIRONMENTAL

1.Storage :-40°C~+80°C
2.Operation:-40°C~+70°C

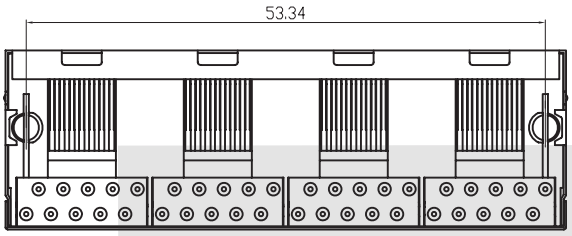

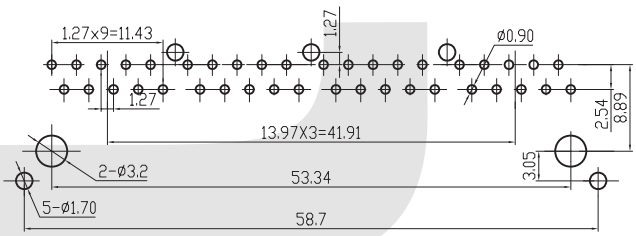

PC Board Layout

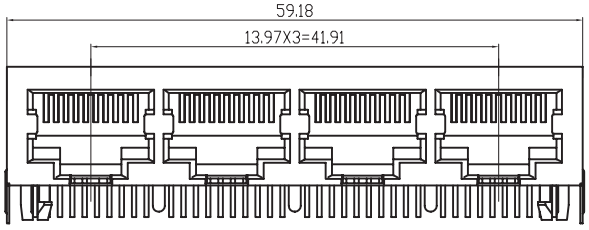

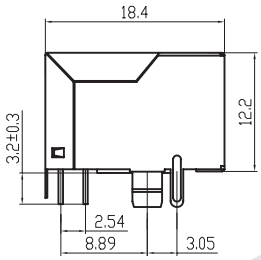

ORDER INFORMATION

KLS12-120 - 10P10C-1x4-XX-X

Part Number	Point NO.	Ports	Gold Thickness	Plastic
	10P10C Point 10P8C Point	1x2-2 Ports 1x4-4 Ports	01-Fu" 02-3u" 03-6u" 04-15u" 05-30u" 06-50u	1-Nylon 2-PBT 3-ABS

PCB Modular Jack Series

KLS12-121-6P PCB Modular Jack 55 Series With Shielded

MATERIAL

1.Housing Material: Glass Filled Polyester UL94V-0 PBT, NYLON
2.Housing Color: Black, Gray, Ivory, White or others
3.Contact Material: Phosphor Bronze Φ0.46mm
4.PLATING: Gold plating over nickel. Gold plating thickness
1.5u "/ 3u" / 6u "/ 15u" / 30u "/ 50u"
5.SHIELD: 0.23 Thickness Brass with nickel plated

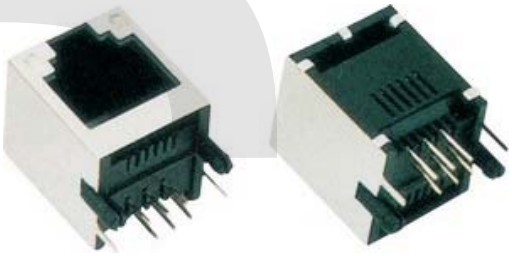

ELECTRICAL

1.Current Rating: 1.5 Amp
2.Voltage Rating: 125VAC
3.Contact Resistance: 30 MΩ Max.
4.Insulation Resistance: 500 MΩ Min. @ 500VDC
5.Withstanding Voltage: 1000VAC RMS 50Hz 1 minute

MECHANICAL

1.Durability : 750 cycles Min.
2.PCB Retention pre-solder : 1 LB MIN

ENVIRONMENTAL

1.Storage :-40°C~+80°C
2.Operation:-40°C~+70°C

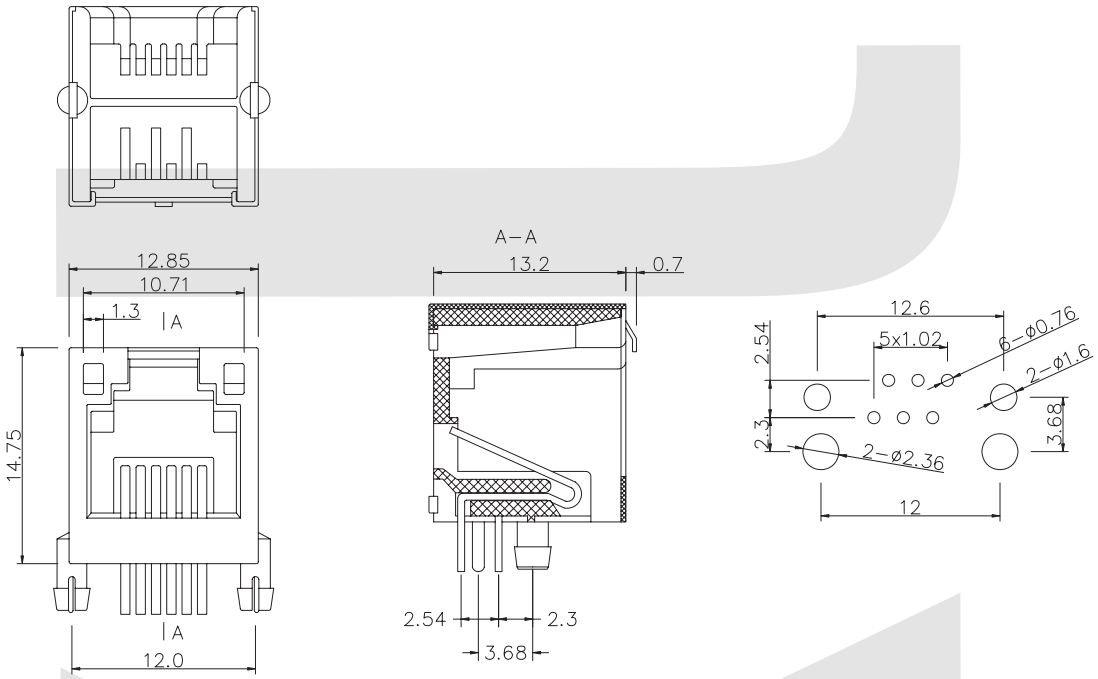

ORDER INFORMATION

KLS12-121 - 6P6C-W-XX-X

Part Number	Point NO.	Shielded	Gold Thickness	Plastic
	6P6C Point	W-With Shielded	01-Fu" 02-3u" 03-6u" 04-15u" 05-30u" 06-50u	1-Nylon 2-PBT 3-ABS

PCB Modular Jack Series

KLS12-122-8P PCB Modular Jack 55 Series With Shielded

MATERIAL

1.Housing Material: Glass Filled Polyester UL94V-0 PBT, NYLON
2.Housing Color: Black, Gray, Ivory, White or others
3.Contact Material: Phosphor Bronze Φ0.46mm
4.PLATING: Gold plating over nickel. Gold plating thickness
1.5u "/ 3u" / 6u "/ 15u" / 30u "/ 50u"
5.SHIELD: 0.23 Thickness Brass with nickel plated

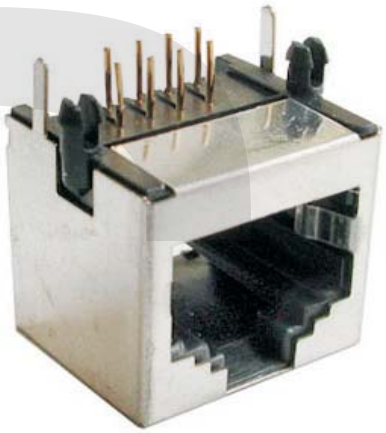

ELECTRICAL

1.Current Rating: 1.5 Amp
2.Voltage Rating: 125VAC
3.Contact Resistance: 30 MΩ Max.
4.Insulation Resistance: 500 MΩ Min. @ 500VDC
5.Withstanding Voltage: 1000VAC RMS 50Hz 1 minute

MECHANICAL

1.Durability : 750 cycles Min.
2.PCB Retention pre-solder : 1 LB MIN

ENVIRONMENTAL

1.Storage :-40°C~+80°C
2.Operation:-40°C~+70°C

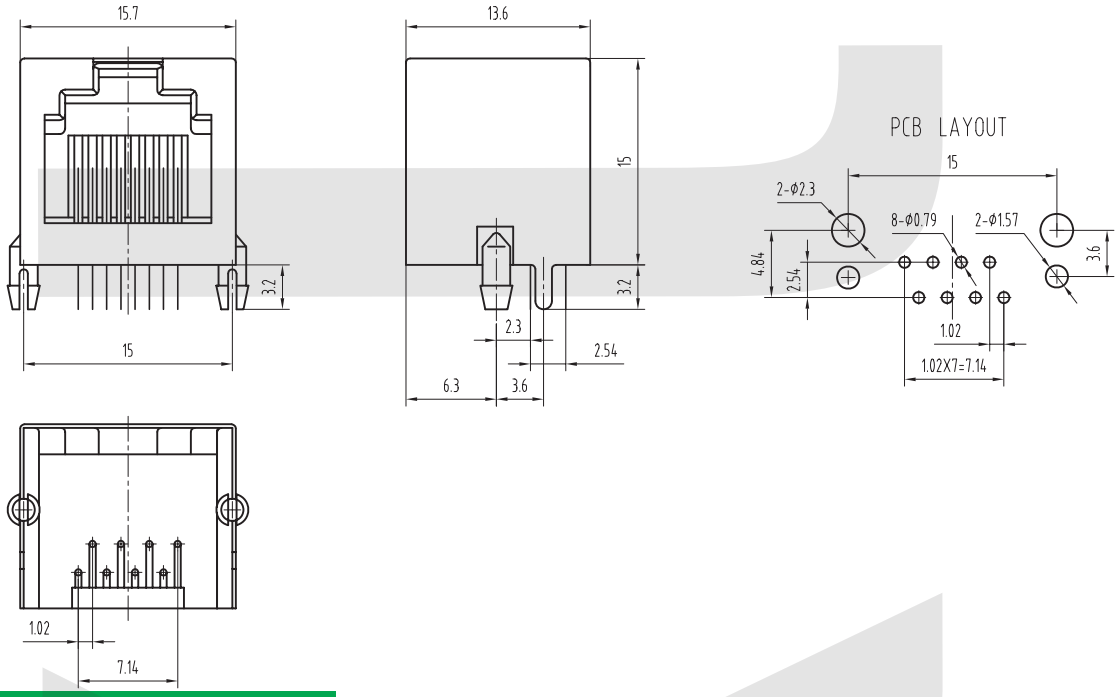

ORDER INFORMATION

KLS12-122 - 8P8C-W-XX-X

Part Number	Point NO.	Shielded	Gold Thickness	Plastic
	8P8C Point	W-With Shielded	01-Fu" 02-3u" 03-6u" 04-15u" 05-30u" 06-50u	1-Nylon 2-PBT 3-ABS

PCB Modular Jack Series

KLS12-123-4P PCB Modular Jack 55 Series



MATERIAL

1.Housing Material: Glass Filled Polyester UL94V-0 PBT, NYLON
2.Housing Color: Black, Gray, Ivory, White or others
3.Contact Material: Phosphor Bronze Φ0.46mm
4.PLATING: Gold plating over nickel. Gold plating thickness
1.5u "/ 3u" / 6u "/ 15u" / 30u "/ 50u"

ELECTRICAL

1.Current Rating: 1.5 Amp
2.Voltage Rating: 125VAC
3.Contact Resistance: 30 MΩ Max.
4.Insulation Resistance: 500 MΩ Min. @ 500VDC
5.Withstanding Voltage: 1000VAC RMS 50Hz 1 minute

MECHANICAL

1.Durability : 750 cycles Min.
2.PCB Retention pre-solder : 1 LB MIN

ENVIRONMENTAL

1.Storage :-40°C~+80°C
2.Operation:-40°C~+70°C

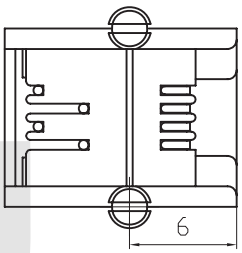

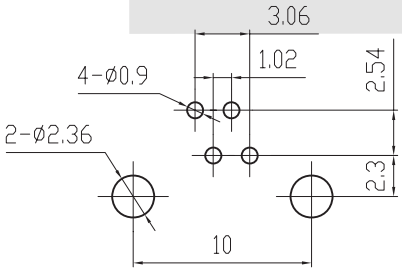

PC Board Layout

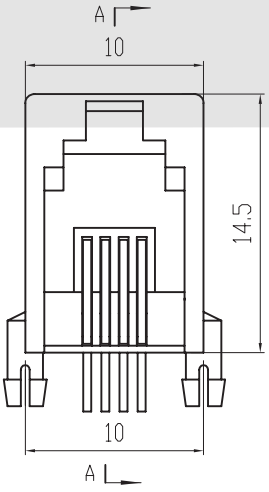

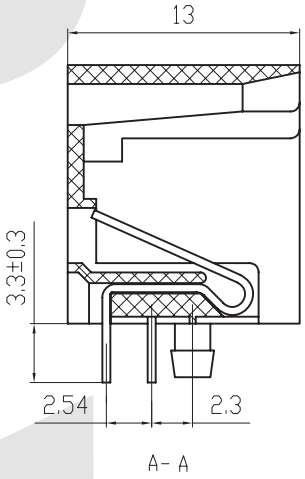

ORDER INFORMATION

KLS12-123- 4P4C -W/O -B -XX -X

Part Number	Point NO.	Panel	Part Color	Gold Thickness	Plastic
	4P4C Point 4P2C Point	W-With Panel W/O-Without Panel	1-Black 2-Gray 3-White 4-IV	01-Fu" 02-3u" 03-6u" 04-15u" 05-30u" 06-50u	1-Nylon 2-PBT 3-ABS

PCB Modular Jack Series

KLS12-123-4P PCB Modular Jack 55 Series



MATERIAL

1.Housing Material: Glass Filled Polyester UL94V-0 PBT, NYLON
2.Housing Color: Black, Gray, Ivory, White or others
3.Contact Material: Phosphor Bronze Φ0.46mm
4.PLATING: Gold plating over nickel. Gold plating thickness
1.5u "/ 3u" / 6u "/ 15u" / 30u "/ 50u"

ELECTRICAL

1.Current Rating: 1.5 Amp
2.Voltage Rating: 125VAC
3.Contact Resistance: 30 MΩ Max.
4.Insulation Resistance: 500 MΩ Min. @ 500VDC
5.Withstanding Voltage: 1000VAC RMS 50Hz 1 minute

MECHANICAL

1.Durability : 750 cycles Min.
2.PCB Retention pre-solder : 1 LB MIN

ENVIRONMENTAL

1.Storage :-40°C~+80°C
2.Operation:-40°C~+70°C

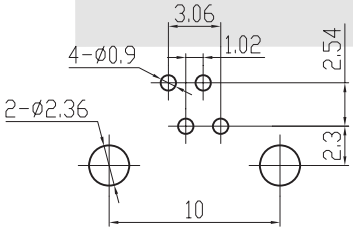

PC Board Layout

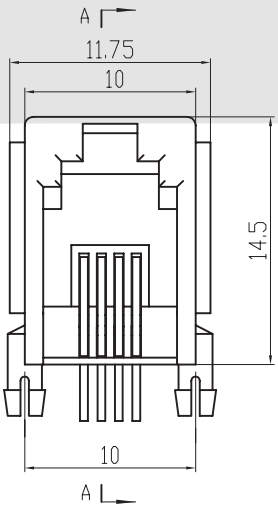

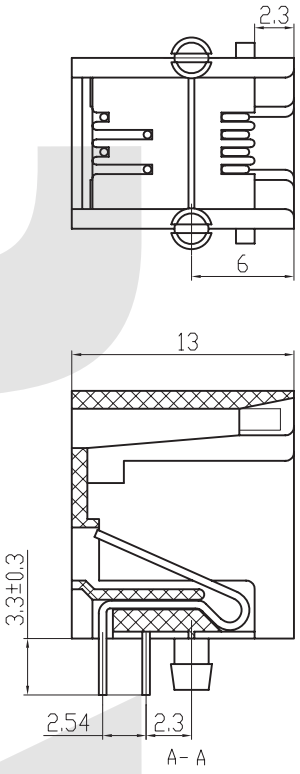

ORDER INFORMATION

KLS12-123- 4P4C- W -B-XX-X

Part Number	Point NO.	Panel	Part Color	Gold Thickness	Plastic
	4P4C Point 4P2C Point	W-With Panel W/O-Without Panel	1-Black 2-Gray 3-White 4-IV	01-Fu" 02-3u" 03-6u" 04-15u" 05-30u" 06-50u	1-Nylon 2-PBT 3-ABS

PCB Modular Jack Series

XII

KLS12-124-6P PCB Modular Jack 55 Series

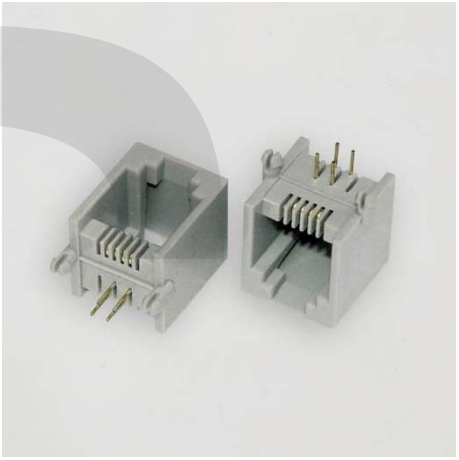

MATERIAL
1.Housing Material: Glass Filled Polyester UL94V-0 PBT, NYLON
2.Housing Color: Black, Gray, Ivory, White or others
3.Contact Material: Phosphor Bronze Φ0.46mm
4.PLATING: Gold plating over nickel. Gold plating thickness
1.5u "/ 3u" / 6u "/ 15u" / 30u "/ 50u"

ELECTRICAL
1.Current Rating: 1.5 Amp
2.Voltage Rating: 125VAC
3.Contact Resistance: 30 MΩ Max.
4.Insulation Resistance: 500 MΩ Min. @ 500VDC
5.Withstanding Voltage: 1000VAC RMS 50Hz 1 minute

MECHANICAL
1.Durability : 750 cycles Min.
2.PCB Retention pre-solder : 1 LB MIN

ENVIRONMENTAL
1.Storage :-40°C~+80°C
2.Operation:-40°C~+70°C

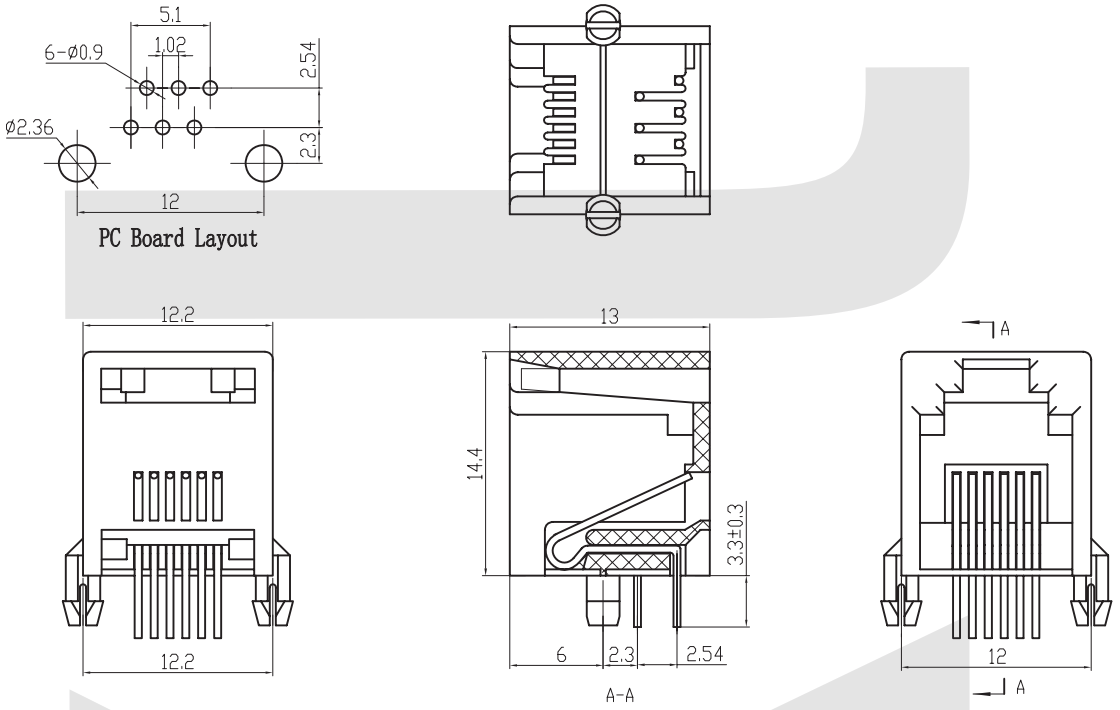

ORDER INFORMATION

KLS12-124- 6P6C -W/O -B -XX -X

Part Number	Point NO.	Panel	Part Color	Gold Thickness	Plastic
	6P6C Point 6P4C Point 6P2C Point	W-With Panel W/O-Without Panel	1-Black 2-Gray 3-White 4-IV	01-Fu" 02-3u" 03-6u" 04-15u" 05-30u" 06-50u	1-Nylon 2-PBT 3-ABS

PCB Modular Jack Series

KLS12-124-6P PCB Modular Jack 55 Series

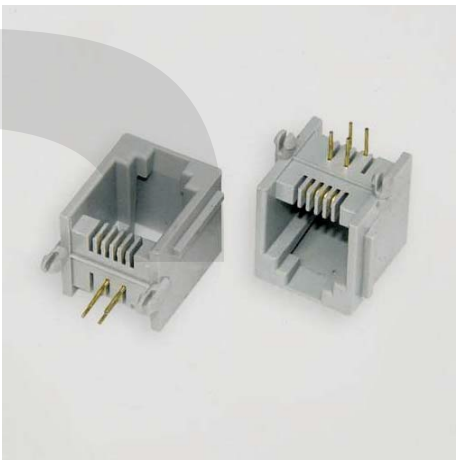

MATERIAL

1.Housing Material: Glass Filled Polyester UL94V-0 PBT, NYLON
2.Housing Color: Black, Gray, Ivory, White or others
3.Contact Material: Phosphor Bronze Φ0.46mm
4.PLATING: Gold plating over nickel. Gold plating thickness
1.5u "/ 3u" / 6u "/ 15u" / 30u "/ 50u"

ELECTRICAL

1.Current Rating: 1.5 Amp
2.Voltage Rating: 125VAC
3.Contact Resistance: 30 MΩ Max.
4.Insulation Resistance: 500 MΩ Min. @ 500VDC
5.Withstanding Voltage: 1000VAC RMS 50Hz 1 minute

MECHANICAL

1.Durability : 750 cycles Min.
2.PCB Retention pre-solder : 1 LB MIN

ENVIRONMENTAL

1.Storage :-40ºC~+80ºC
2.Operation:-40ºC~+70ºC

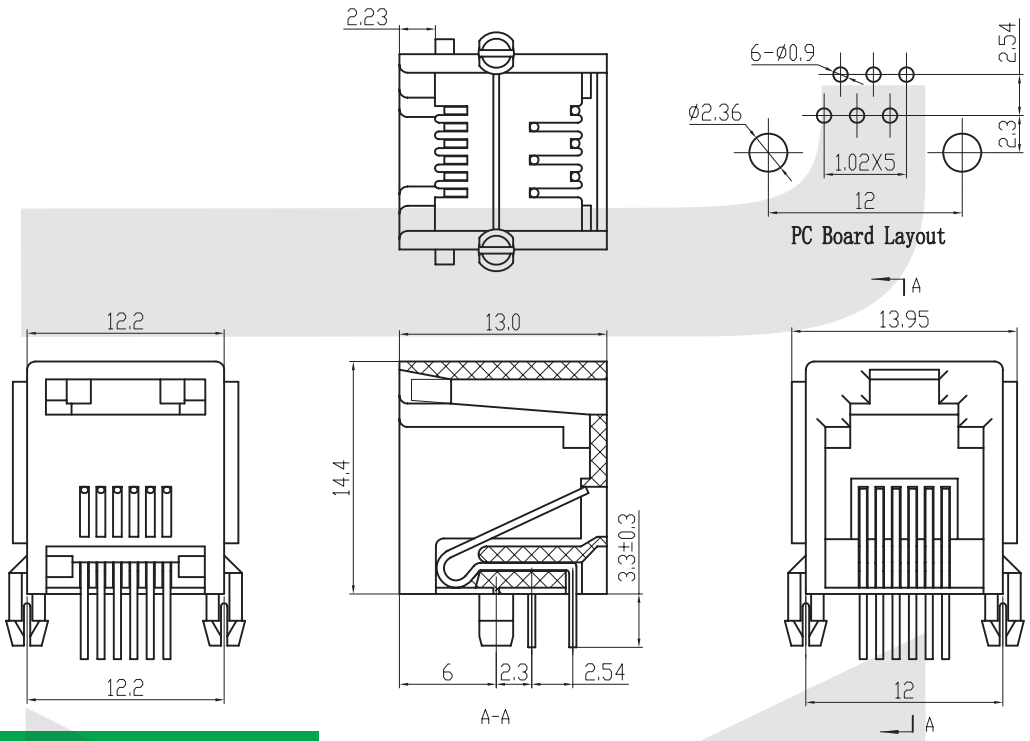

ORDER INFORMATION

KLS12-124- 6P6C- W -B-XX-X

Part Number	Point NO.	Panel	Part Color	Gold Thickness	Plastic
	6P6C Point 6P4C Point 6P2C Point	W-With Panel W/O-Without Panel	1-Black 2-Gray 3-White 4-IV	01-Fu" 02-3u" 03-6u" 04-15u" 05-30u" 06-50u	1-Nylon 2-PBT 3-ABS

PCB Modular Jack Series

XII

KLS12-127-6P PCB Modular Jack 55 Series 1x2 Ports



MATERIAL

1.Housing Material : Glass Filled Polyester UL94V-0 PBT, NYLON
2.Housing Color : Black, Gray, Ivory, White or others
3.Contact Material : Phosphor Bronze Φ0.46mm
4.PLATING: Gold plating over nickel. Gold plating thickness
1.5u″/3u″/6u″/15u″/30u″/50u″

ELECTRICAL

1.Current Rating:1.5Amp
2.Voltage Rating:125VAC
3.Contact Resistance : 30MΩ Max.
4.Insulation Resistance : 500 MΩ Min @500VDC
5.Withstanding Voltage: 1000VAC RMS 50Hz 1 minute

MECHANICAL

1.Durability : 750 cycles Min
2.PCB Retention pre-solder : 1 LB Min

ENVIRONMENTAL

1.Storage :-40°C~+80°C
2.Operation:-40°C~+70°C

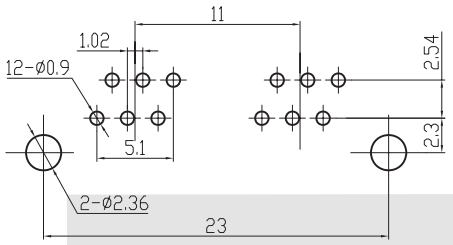

PC Board Layout

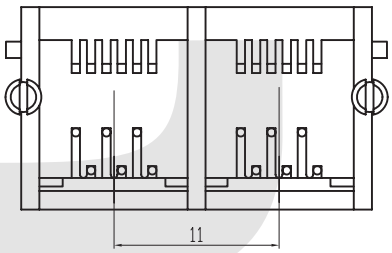

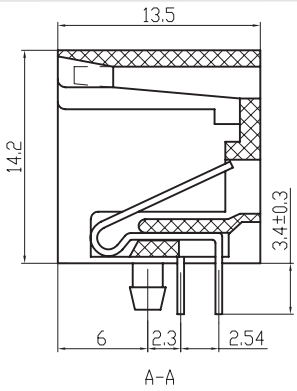

A-A

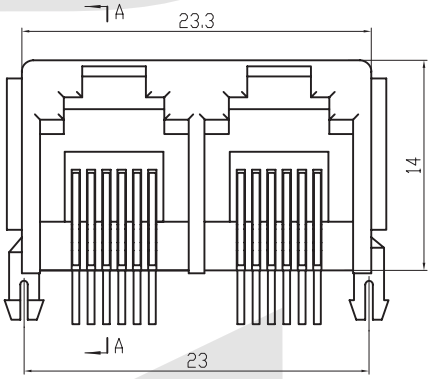

ORDER INFORMATION

KLS12-127 - 6P6C-1x2-W-B-XX-X

Part Number	Point NO.	Ports	Panel	Part Color	Gold Thickness	Plastic
	6P6C Point 6P4C Point 6P2C Point	1x2-2 Ports 1x3-3 Ports 1x4-4 Ports 1x5-4 Ports 1x6-6 Ports 1x8-8 Ports	W-With Panel W/O-Without Panel	1-Black 2-Gray 3-White 4-IV	01-Fu" 02-3u" 03-6u" 04-15u" 05-30u" 06-50u	1-Nylon 2-PBT 3-ABS

PCB Modular Jack Series

KLS12-127-6P PCB Modular Jack 55 Series 1x3 Ports

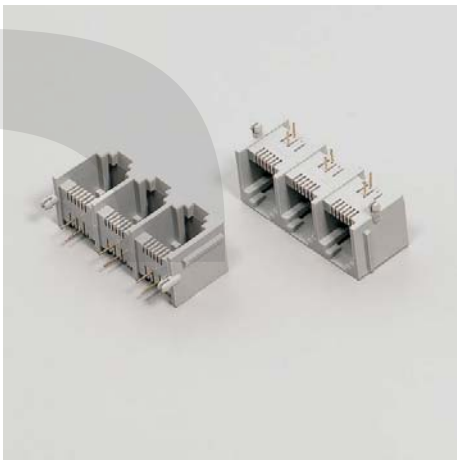

MATERIAL

1.Housing Material : Glass Filled Polyester UL94V-0 PBT, NYLON
2.Housing Color : Black, Gray, Ivory, White or others
3.Contact Material : Phosphor Bronze Φ0.46mm
4.PLATING: Gold plating over nickel. Gold plating thickness
1.5u″/3u″/6u″/15u″/30u″/50u″

ELECTRICAL

1.Current Rating:1.5Amp
2.Voltage Rating:125VAC
3.Contact Resistance : 30MΩ Max.
4.Insulation Resistance : 500 MΩ Min @500VDC
5.Withstanding Voltage: 1000VAC RMS 50Hz 1 minute

MECHANICAL

1.Durability : 750 cycles Min
2.PCB Retention pre-solder : 1 LB Min

ENVIRONMENTAL

1.Storage :-40°C~+80°C
2.Operation:-40°C~+70°C

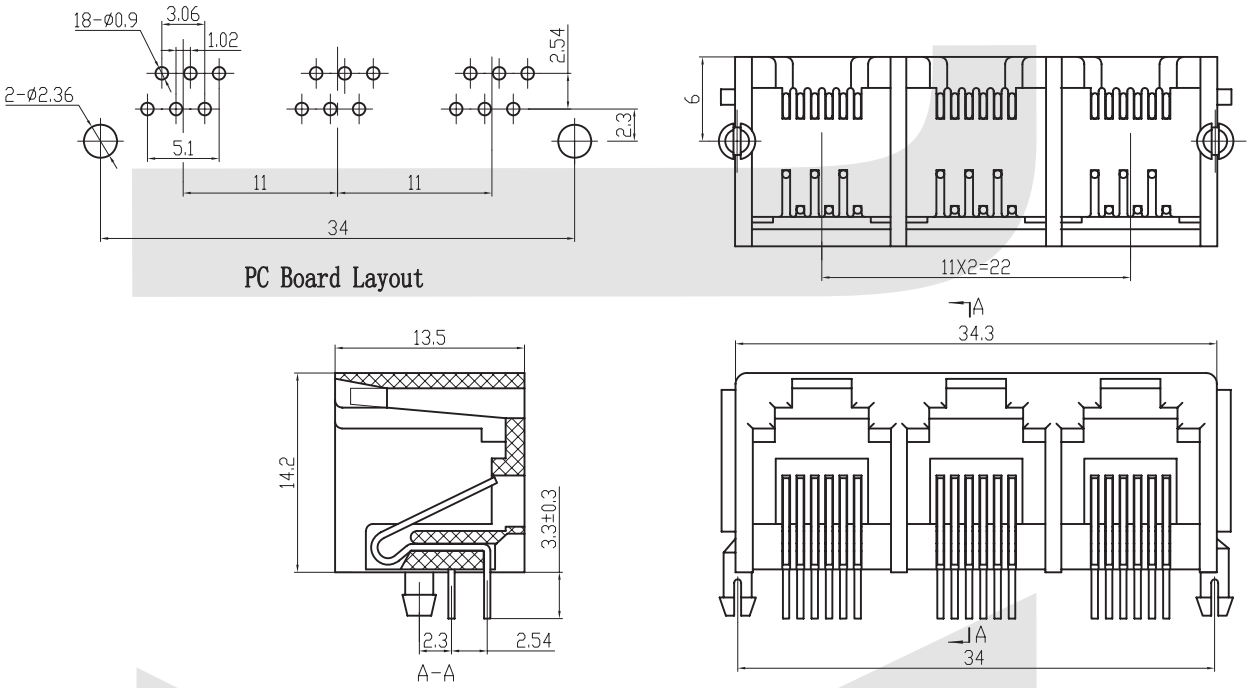

ORDER INFORMATION

KLS12-127 - 6P6C-1x3-W-B-XX-X

Part Number	Point NO.	Ports	Panel	Part Color	Gold Thickness	Plastic
	6P6C Point 6P4C Point 6P2C Point	1x2-2 Ports 1x3-3 Ports 1x4-4 Ports 1x5-4 Ports 1x6-6 Ports 1x8-8 Ports	W-With Panel W/O-Without Panel	1-Black 2-Gray 3-White 4-IV	01-Fu" 02-3u" 03-6u" 04-15u" 05-30u" 06-50u	1-Nylon 2-PBT 3-ABS

PCB Modular Jack Series

KLS12-127-6P PCB Modular Jack 55 Series 1x4 Ports

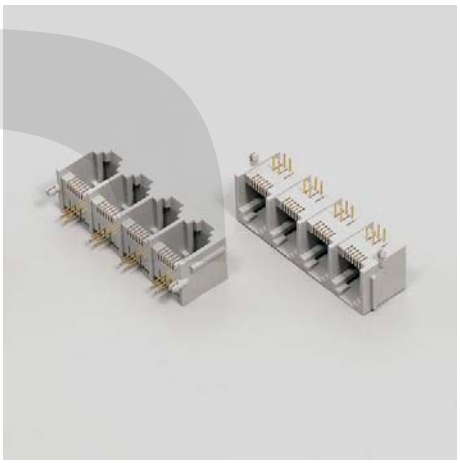

MATERIAL
1.Housing Material : Glass Filled Polyester UL94V-0 PBT, NYLON
2.Housing Color : Black, Gray, Ivory, White or others
3.Contact Material : Phosphor Bronze Φ0.46mm
4.PLATING: Gold plating over nickel. Gold plating thickness
1.5u″/3u″/6u″/15u″/30u″/50u″

ELECTRICAL
1.Current Rating:1.5Amp
2.Voltage Rating:125VAC
3.Contact Resistance : 30MΩ Max.
4.Insulation Resistance : 500 MΩ Min @500VDC
5.Withstanding Voltage: 1000VAC RMS 50Hz 1 minute

MECHANICAL
1.Durability : 750 cycles Min
2.PCB Retention pre-solder : 1 LB Min

ENVIRONMENTAL
1.Storage :-40ºC~+80ºC
2.Operation:-40ºC~+70ºC

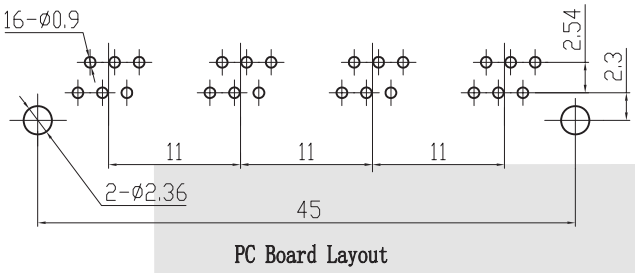

PC Board Layout

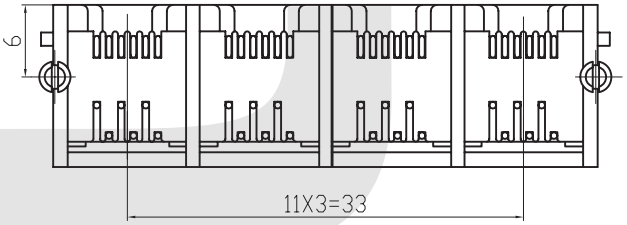

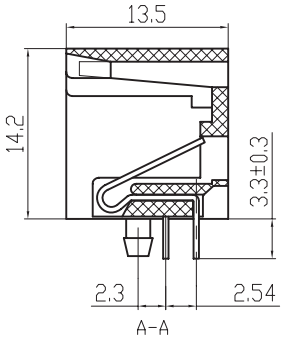

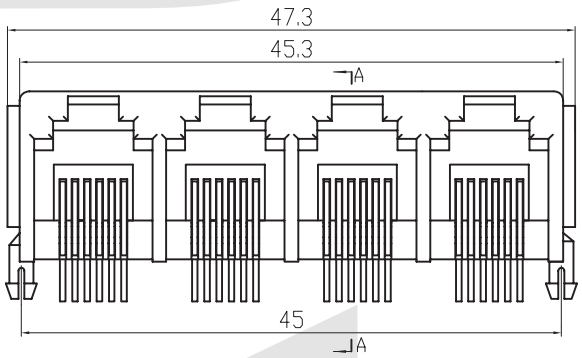

ORDER INFORMATION

KLS12-127 - 6P6C-1x4-W-B-XX-X

Part Number	Point NO.	Ports	Panel	Part Color	Gold Thickness	Plastic
	6P6C Point 6P4C Point 6P2C Point	1x2-2 Ports 1x3-3 Ports 1x4-4 Ports 1x5-4 Ports 1x6-6 Ports 1x8-8 Ports	W-With Panel W/O-Without Panel	1-Black 2-Gray 3-White 4-IV	01-Fu" 02-3u" 03-6u" 04-15u" 05-30u" 06-50u	1-Nylon 2-PBT 3-ABS

PCB Modular Jack Series

KLS12-127-6P PCB Modular Jack 55 Series 1x5 Ports

MATERIAL

1.Housing Material : Glass Filled Polyester UL94V-0 PBT, NYLON
2.Housing Color : Black, Gray, Ivory, White or others
3.Contact Material : Phosphor Bronze Φ0.46mm
4.PLATING: Gold plating over nickel. Gold plating thickness
1.5u″/3u″/6u″/15u″/30u″/50u″

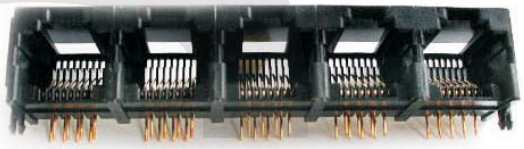

ELECTRICAL

1.Current Rating:1.5Amp
2.Voltage Rating:125VAC
3.Contact Resistance : 30MΩ Max.
4.Insulation Resistance : 500 MΩ Min @500VDC
5.Withstanding Voltage: 1000VAC RMS 50Hz 1 minute

MECHANICAL

1.Durability : 750 cycles Min
2.PCB Retention pre-solder : 1 LB Min

ENVIRONMENTAL

1.Storage :-40ºC~+80ºC
2.Operation:-40ºC~+70ºC

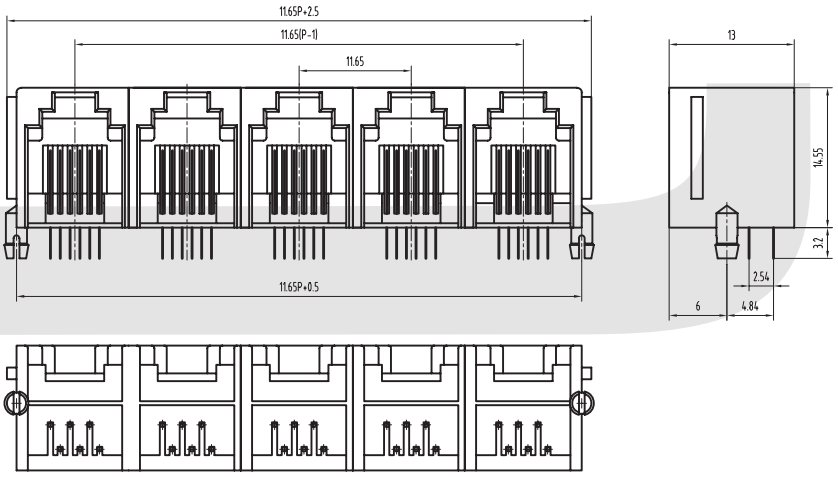

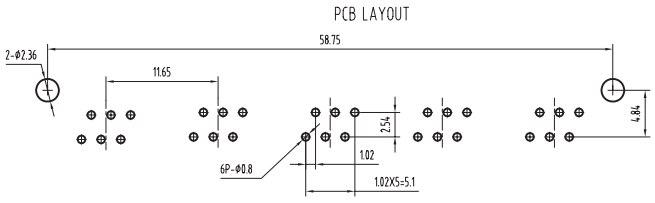

ORDER INFORMATION

KLS12-127 - 6P6C-1x5-W-B-XX-X

Part Number	Point NO.	Ports	Panel	Part Color	Gold Thickness	Plastic
	6P6C Point 6P4C Point 6P2C Point	1x2-2 Ports 1x3-3 Ports 1x4-4 Ports 1x5-4 Ports 1x6-6 Ports 1x8-8 Ports	W-With Panel W/O-Without Panel	1-Black 2-Gray 3-White 4-IV	01-Fu" 02-3u" 03-6u" 04-15u" 05-30u" 06-50u	1-Nylon 2-PBT 3-ABS

PCB Modular Jack Series

KLS12-127-6P PCB Modular Jack 55 Series 1x6 Ports



MATERIAL

1.Housing Material : Glass Filled Polyester UL94V-0 PBT, NYLON
2.Housing Color : Black, Gray, Ivory, White or others
3.Contact Material : Phosphor Bronze Φ0.46mm
4.PLATING: Gold plating over nickel. Gold plating thickness
1.5u″/3u″/6u″/15u″/30u″/50u″

ELECTRICAL

1.Current Rating:1.5Amp
2.Voltage Rating:125VAC
3.Contact Resistance : 30MΩ Max.
4.Insulation Resistance : 500 MΩ Min @500VDC
5.Withstanding Voltage: 1000VAC RMS 50Hz 1 minute

MECHANICAL

1.Durability : 750 cycles Min
2.PCB Retention pre-solder : 1 LB Min

ENVIRONMENTAL

1.Storage :-40ºC~+80ºC
2.Operation:-40ºC~+70ºC

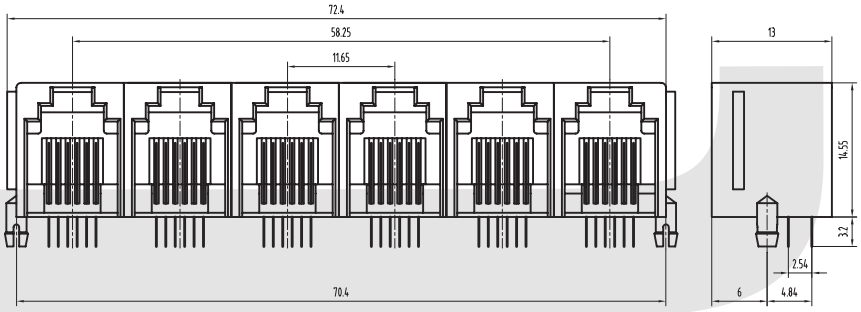

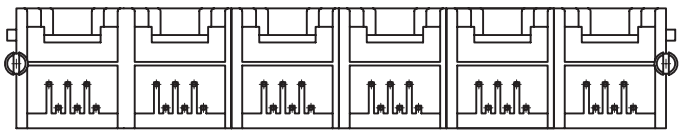

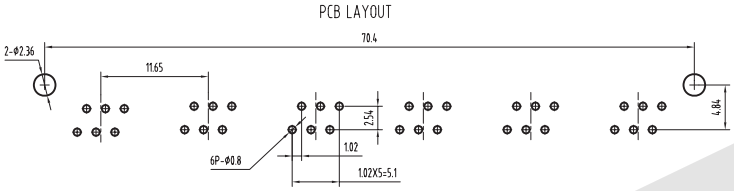

ORDER INFORMATION

KLS12-127 - 6P6C-1x6-W-B-XX-X

Part Number	Point NO.	Ports	Panel	Part Color	Gold Thickness	Plastic
	6P6C Point 6P4C Point 6P2C Point	1x2-2 Ports 1x3-3 Ports 1x4-4 Ports 1x5-4 Ports 1x6-6 Ports 1x8-8 Ports	W-With Panel W/O-Without Panel	1-Black 2-Gray 3-White 4-IV	01-Fu" 02-3u" 03-6u" 04-15u" 05-30u" 06-50u	1-Nylon 2-PBT 3-ABS

PCB Modular Jack Series

KLS12-127-6P PCB Modular Jack 55 Series 1x8 Ports

MATERIAL

1.Housing Material : Glass Filled Polyester UL94V-0 PBT, NYLON
2.Housing Color : Black, Gray, Ivory, White or others
3.Contact Material : Phosphor Bronze Φ0.46mm
4.PLATING: Gold plating over nickel. Gold plating thickness
1.5u″/3u″/6u″/15u″/30u″/50u″

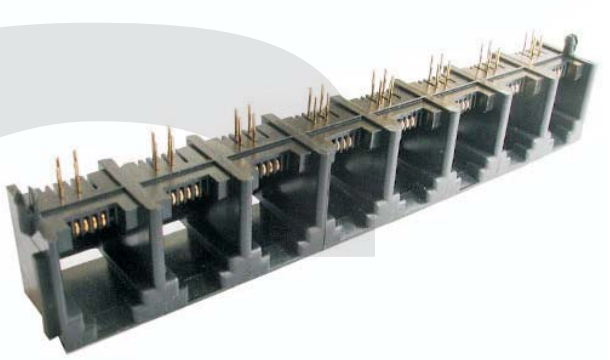

ELECTRICAL

1.Current Rating:1.5Amp
2.Voltage Rating:125VAC
3.Contact Resistance : 30MΩ Max.
4.Insulation Resistance : 500 MΩ Min @500VDC
5.Withstanding Voltage: 1000VAC RMS 50Hz 1 minute

MECHANICAL

1.Durability : 750 cycles Min
2.PCB Retention pre-solder : 1 LB Min

ENVIRONMENTAL

1.Storage :-40ºC~+80ºC
2.Operation:-40ºC~+70ºC

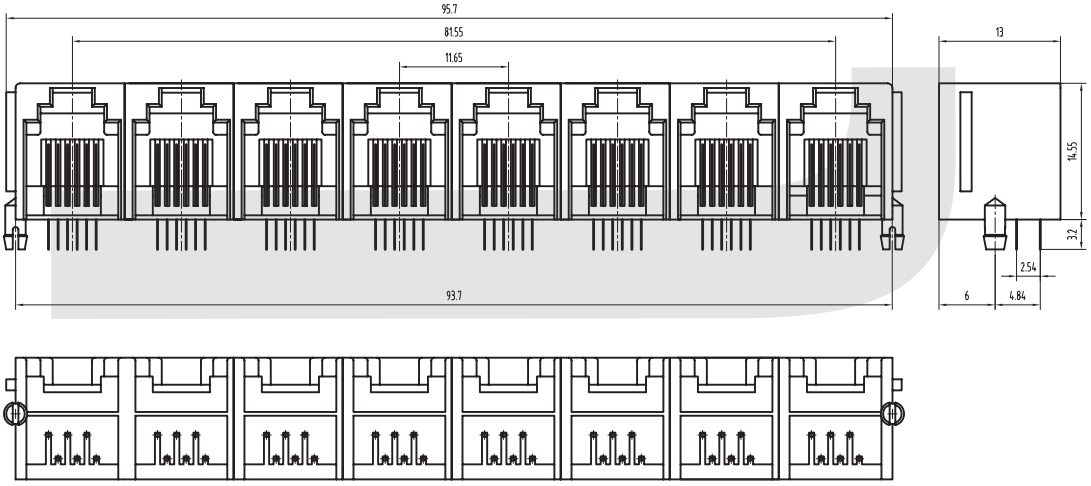

PCB LAYOUT

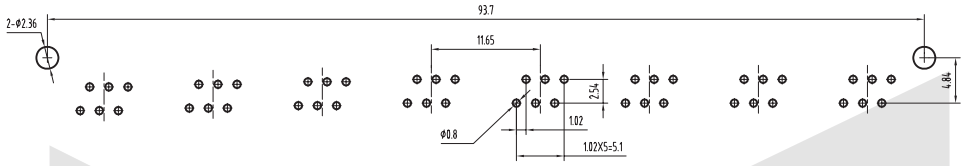

ORDER INFORMATION

KLS12-127 - 6P6C-1x8-W-B-XX-X

Part Number	Point NO.	Ports	Panel	Part Color	Gold Thickness	Plastic
	6P6C Point 6P4C Point 6P2C Point	1x2-2 Ports 1x3-3 Ports 1x4-4 Ports 1x5-4 Ports 1x6-6 Ports 1x8-8 Ports	W-With Panel W/O-Without Panel	1-Black 2-Gray 3-White 4-IV	01-Fu" 02-3u" 03-6u" 04-15u" 05-30u" 06-50u	1-Nylon 2-PBT 3-ABS

P/N: KLS12-128-6P4C-2

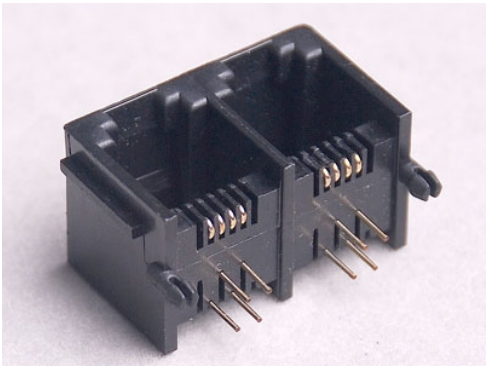

Electrical
I
1.Current Rating:1.5 amps
2.Voltage Rating:125vac
3.Insulation Resistance:500 MΩmin
4.Contact Resistance:30 MΩmax
5.Withstanding Voltage:AC 1000V RMS 50Hz or 60Hz 1 min

Mechanical

1.Insertion Force:2.2KG.F max
2.Retention Strength:7.7KG.F min between jack and plug
3.Durability:600 mating cycles min

Material

1.Housing:ABS RESIN(UL94V-0) PBT(UL94V-0) PA66(UL94V-0) PA46(UL94V-0)
2.Contact Wire:Diameter 0.45mm phosphor bronze gold plating over nickel
0.35mm thickness phosphor bronze alloy selective gold plating over nickel
3.Shield:0.20~0.25mm thickness brass with tin plated

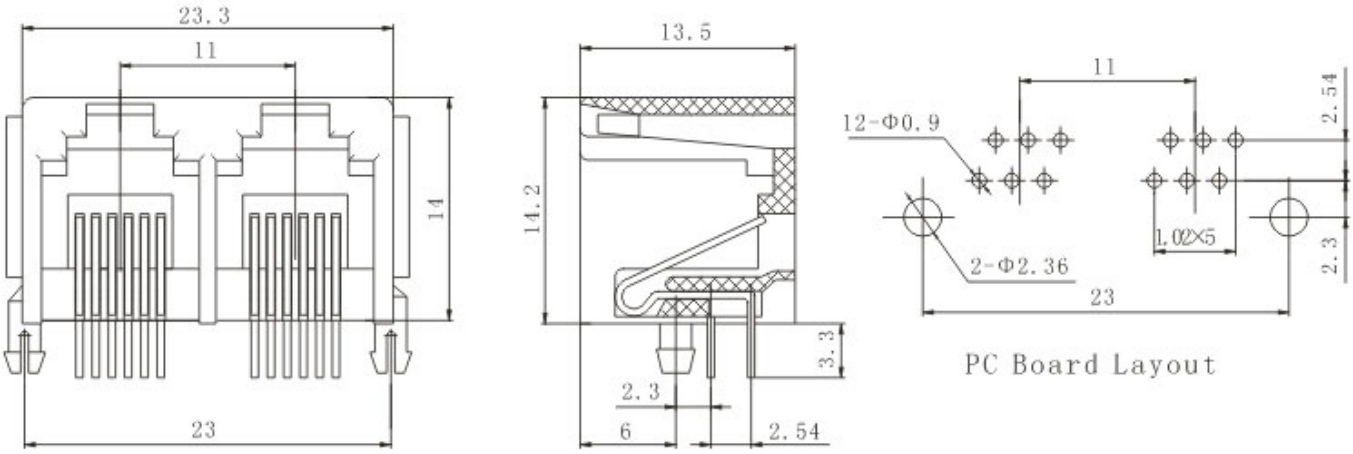

PCB Modular Jack Series

KLS12-133-8P PCB Modular Jack 55 Series

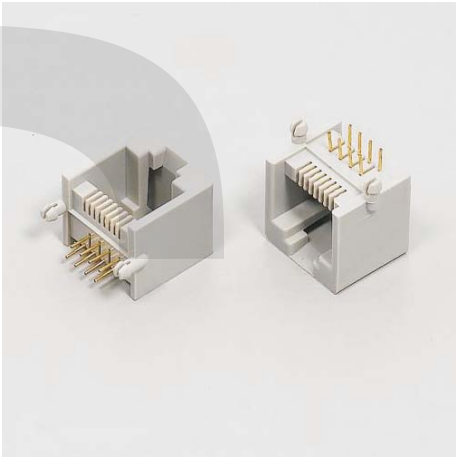

MATERIAL

1.Housing Material: Glass Filled Polyester UL94V-0 PBT, NYLON
2.Housing Color: Black, Gray, Ivory, White or others
3.Contact Material: Phosphor Bronze Φ0.46mm
4.PLATING: Gold plating over nickel. Gold plating thickness
1.5u "/ 3u" / 6u "/ 15u" / 30u "/ 50u"

ELECTRICAL

1.Current Rating: 1.5 Amp
2.Voltage Rating: 125VAC
3.Contact Resistance: 30 MΩ Max.
4.Insulation Resistance: 500 MΩ Min. @ 500VDC
5.Withstanding Voltage: 1000VAC RMS 50Hz 1 minute

MECHANICAL

1.Durability : 750 cycles Min.
2.PCB Retention pre-solder : 1 LB MIN

ENVIRONMENTAL

1.Storage :-40°C~+80°C
2.Operation:-40°C~+70°C

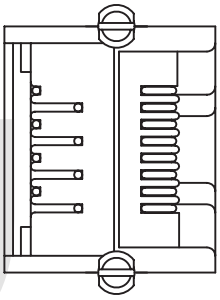

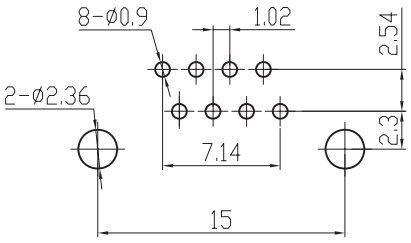

PC Board Layout

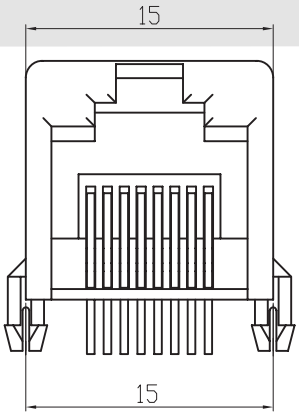

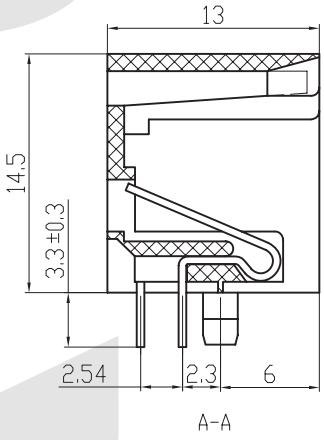

ORDER INFORMATION

KLS12-133- 8P8C-W/O-B-XX-X

Part Number	Point NO.	Panel	Part Color	Gold Thickness	Plastic
	8P8C Point	W-With Panel W/O-Without Panel	1-Black 2-Gray 3-White 4-IV	01-Fu" 02-3u" 03-6u" 04-15u" 05-30u" 06-50u	1-Nylon 2-PBT 3-ABS

PCB Modular Jack Series

KLS12-133-8P PCB Modular Jack 55 Series



MATERIAL

1.Housing Material: Glass Filled Polyester UL94V-0 PBT, NYLON
2.Housing Color: Black, Gray, Ivory, White or others
3.Contact Material: Phosphor Bronze Φ0.46mm
4.PLATING: Gold plating over nickel. Gold plating thickness
1.5u "/ 3u" / 6u "/ 15u" / 30u "/ 50u"

ELECTRICAL

1.Current Rating: 1.5 Amp
2.Voltage Rating: 125VAC
3.Contact Resistance: 30 MΩ Max.
4.Insulation Resistance: 500 MΩ Min. @ 500VDC
5.Withstanding Voltage: 1000VAC RMS 50Hz 1 minute

MECHANICAL

1.Durability : 750 cycles Min.
2.PCB Retention pre-solder : 1 LB MIN

ENVIRONMENTAL

1.Storage :-40°C~+80°C
2.Operation:-40°C~+70°C

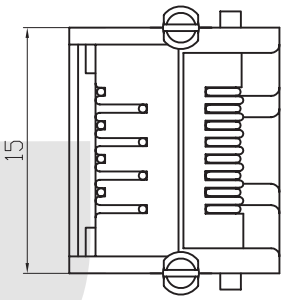

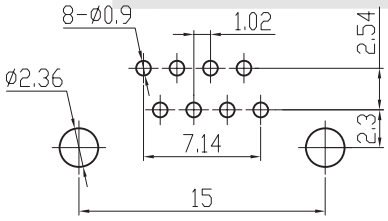

PC Board Layout

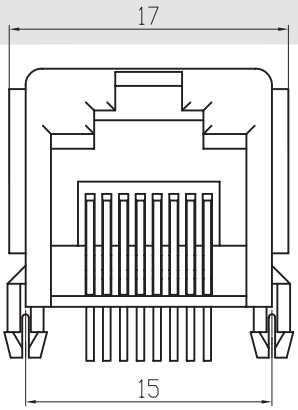

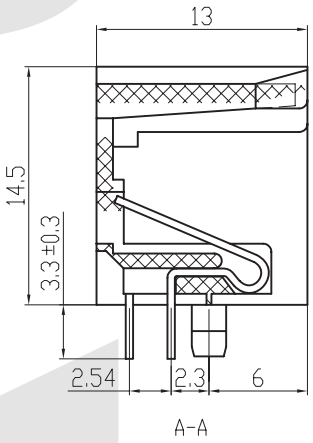

A-A

ORDER INFORMATION

KLS12-133- 8P8C- W -B-XX-X

Part Number	Point NO.	Panel	Part Color	Gold Thickness	Plastic
	8P8C Point	W-With Panel W/O-Without Panel	1-Black 2-Gray 3-White 4-IV	01-Fu" 02-3u" 03-6u" 04-15u" 05-30u" 06-50u	1-Nylon 2-PBT 3-ABS

PCB Modular Jack Series

KLS12-135-4P PCB Modular Jack 53 Series



MATERIAL

1.Housing Material: Glass Filled Polyester UL94V-0 PBT, NYLON
2.Housing Color: Black, Gray, Ivory, White or others
3.Contact Material: Phosphor Bronze Φ0.46mm
4.PLATING: Gold plating over nickel. Gold plating thickness
1.5u "/ 3u" / 6u "/ 15u" / 30u "/ 50u"

ELECTRICAL

1.Current Rating: 1.5 Amp
2.Voltage Rating: 125VAC
3.Contact Resistance: 30 MΩ Max.
4.Insulation Resistance: 500 MΩ Min. @ 500VDC
5.Withstanding Voltage: 1000VAC RMS 50Hz 1 minute

MECHANICAL

1.Durability : 750 cycles Min.
2.PCB Retention pre-solder : 1 LB MIN

ENVIRONMENTAL

1.Storage :-40°C~+80°C
2.Operation:-40°C~+70°C

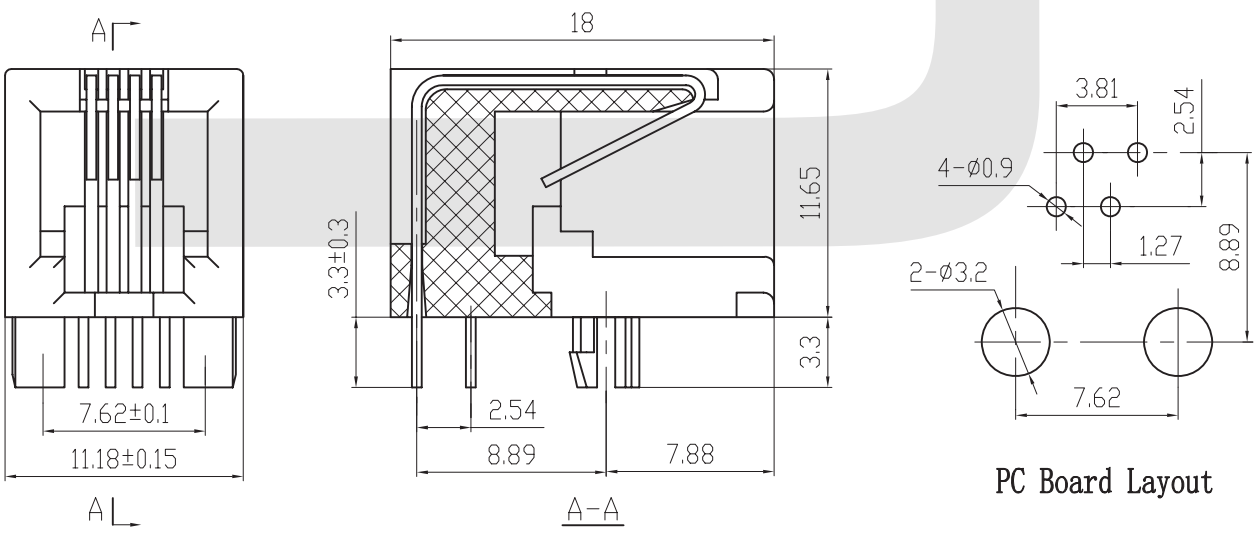

ORDER INFORMATION

KLS12-135 - 4P4C-B-XX-X

Part Number	Point NO.	Part Color	Gold Thickness	Plastic
	4P4C Point 4P2C Point	1-Black 2-Gray 3-White 4-IV	01-Fu" 02-3u" 03-6u" 04-15u" 05-30u" 06-50u	1-Nylon 2-PBT 3-ABS

PCB Modular Jack Series

KLS12-136-6P PCB Modular Jack 53 Series



MATERIAL

1.Housing Material: Glass Filled Polyester UL94V-0 PBT, NYLON
2.Housing Color: Black, Gray, Ivory, White or others
3.Contact Material: Phosphor Bronze Φ0.46mm
4.PLATING: Gold plating over nickel. Gold plating thickness
1.5u "/ 3u" / 6u "/ 15u" / 30u "/ 50u"

ELECTRICAL

1.Current Rating: 1.5 Amp
2.Voltage Rating: 125VAC
3.Contact Resistance: 30 MΩ Max.
4.Insulation Resistance: 500 MΩ Min. @ 500VDC
5.Withstanding Voltage: 1000VAC RMS 50Hz 1 minute

MECHANICAL

1.Durability : 750 cycles Min.
2.PCB Retention pre-solder : 1 LB MIN

ENVIRONMENTAL

1.Storage :-40°C~+80°C
2.Operation:-40°C~+70°C

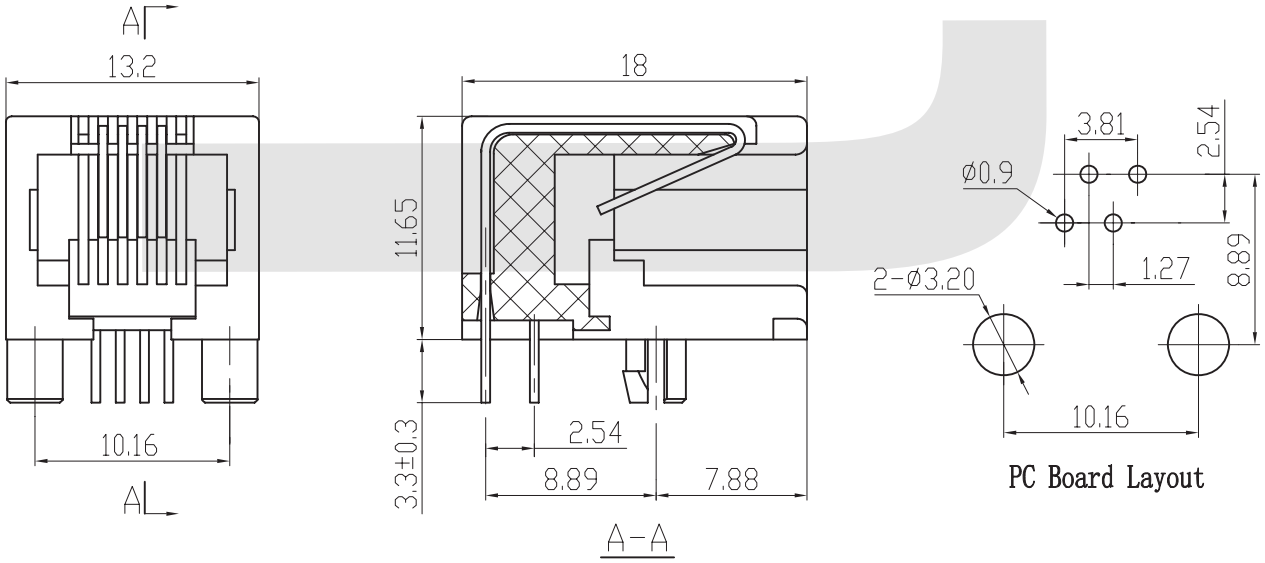

ORDER INFORMATION

KLS12-136 - 6P6C-B-XX-X

Part Number	Point NO.	Part Color	Gold Thickness	Plastic
	6P6C Point 6P4C Point 6P2C Point	1-Black 2-Gray 3-White 4-IV	01-Fu" 02-3u" 03-6u" 04-15u" 05-30u" 06-50u	1-Nylon 2-PBT 3-ABS

PCB Modular Jack Series

KLS12-138-8P PCB Modular Jack 53 Series



MATERIAL

1.Housing Material: Glass Filled Polyester UL94V-0 PBT, NYLON
2.Housing Color: Black, Gray, Ivory, White or others
3.Contact Material: Phosphor Bronze Φ0.46mm
4.PLATING: Gold plating over nickel. Gold plating thickness
1.5u "/ 3u" / 6u "/ 15u" / 30u "/ 50u"

ELECTRICAL

1.Current Rating: 1.5 Amp
2.Voltage Rating: 125VAC
3.Contact Resistance: 30 MΩ Max.
4.Insulation Resistance: 500 MΩ Min. @ 500VDC
5.Withstanding Voltage: 1000VAC RMS 50Hz 1 minute

MECHANICAL

1.Durability : 750 cycles Min.
2.PCB Retention pre-solder : 1 LB MIN

ENVIRONMENTAL

1.Storage :-40°C~+80°C
2.Operation:-40°C~+70°C

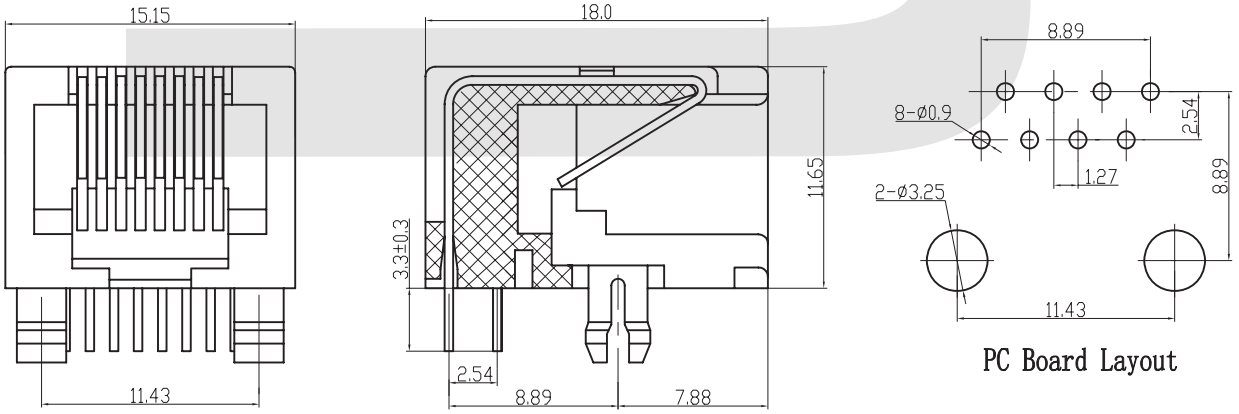

ORDER INFORMATION

KLS12-138 - 8P8C-B-XX-X

Part Number	Point NO.	Part Color	Gold Thickness	Plastic
	8P8C Point 8P6C Point 8P4C Point	1-Black 2-Gray 3-White 4-IV	01-Fu" 02-3u" 03-6u" 04-15u" 05-30u" 06-50u	1-Nylon 2-PBT 3-ABS

PCB Modular Jack Series

KLS12-139-8P PCB Modular Jack 53 Series With Shield

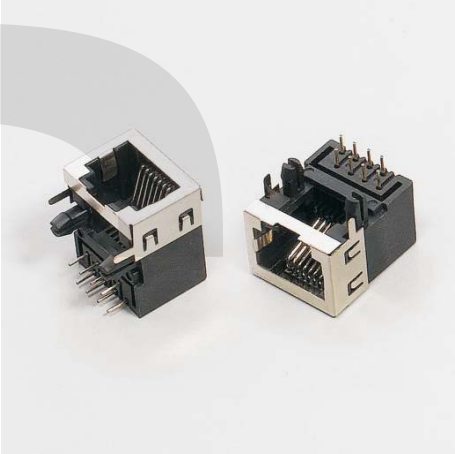

MATERIAL

1.Housing Material: Glass Filled Polyester UL94V-0 PBT, NYLON
2.Housing Color: Black, Gray, Ivory, White or others
3.Contact Material: Phosphor Bronze Φ0.46mm
4.PLATING: Gold plating over nickel. Gold plating thickness
1.5u "/ 3u" / 6u "/ 15u" / 30u "/ 50u"
5.SHIELD: 0.23 Thickness Brass with nickel plated

ELECTRICAL

1.Current Rating: 1.5 Amp
2.Voltage Rating: 125VAC
3.Contact Resistance: 30 MΩ Max.
4.Insulation Resistance: 500 MΩ Min. @ 500VDC
5.Withstanding Voltage: 1000VAC RMS 50Hz 1 minute

MECHANICAL

1.Durability : 750 cycles Min.
2.PCB Retention pre-solder : 1 LB MIN

ENVIRONMENTAL

1.Storage :-40°C~+80°C
2.Operation:-40°C~+70°C

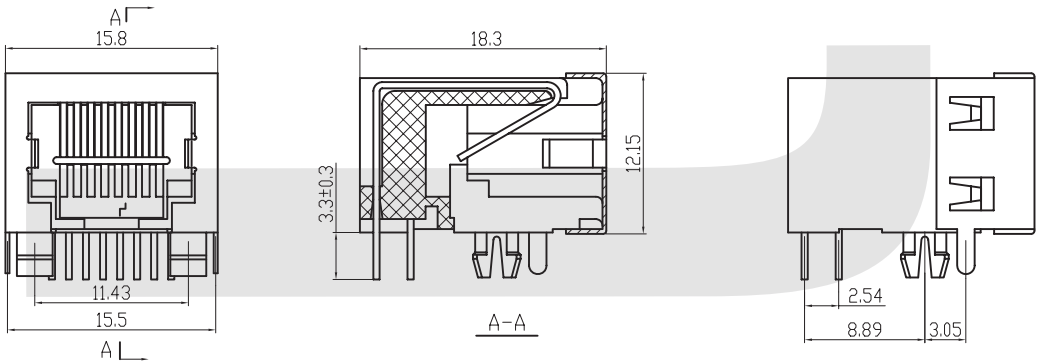

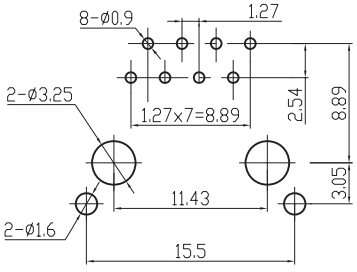

PC Board Layout

ORDER INFORMATION

KLS12-139 - 8P8C - H - XX - X

Part Number	Point NO.	Shielded	Gold Thickness	Plastic
	8P8C Point 8P4C Point	H-Half Shielded	01-Fu" 02-3u" 03-6u" 04-15u" 05-30u" 06-50u	1-Nylon 2-PBT 3-ABS

PCB Modular Jack Series

KLS12-142-6P PCB Modular Jack 53 Series 1x2 Ports



MATERIAL

1.Housing Material: Glass Filled Polyester UL94V-0 PBT, NYLON
2.Housing Color: Black, Gray, Ivory, White or others
3.Contact Material: Phosphor Bronze Φ0.46mm
4.PLATING: Gold plating over nickel. Gold plating thickness
1.5u "/ 3u" / 6u "/ 15u" / 30u "/ 50u"

ELECTRICAL

1.Current Rating: 1.5 Amp
2.Voltage Rating: 125VAC
3.Contact Resistance: 30 MΩ Max.
4.Insulation Resistance: 500 MΩ Min. @ 500VDC
5.Withstanding Voltage: 1000VAC RMS 50Hz 1 minute

MECHANICAL

1.Durability : 750 cycles Min.
2.PCB Retention pre-solder : 1 LB MIN

ENVIRONMENTAL

1.Storage :-40ºC~+80ºC
2.Operation:-40ºC~+70ºC

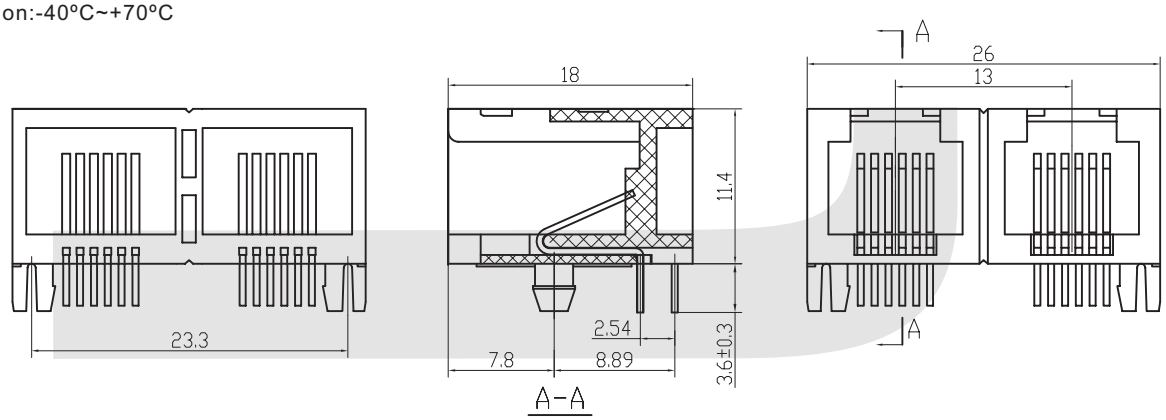

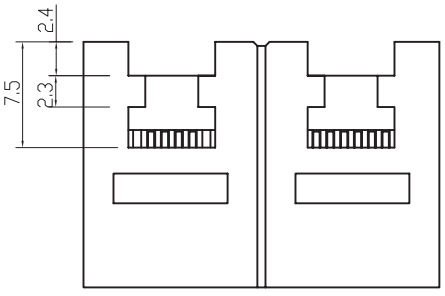

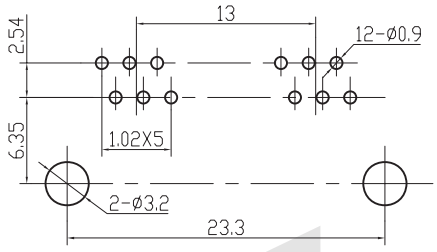

PC Board Layout

ORDER INFORMATION

KLS12-142 - 6P6C-B-XX-X

Part Number	Point NO.	Part Color	Gold Thickness	Plastic
	6P6C Point 6P4C Point 6P2C Point	1-Black 2-Gray 3-White 4-IV	01-Fu" 02-3u" 03-6u" 04-15u" 05-30u" 06-50u	1-Nylon 2-PBT 3-ABS

PCB Modular Jack Series

KLS12-143-4P PCB Modular Jack 57 Series



MATERIAL

1.Housing Material: Glass Filled Polyester UL94V-0 PBT, NYLON
2.Housing Color: Black, Gray, Ivory, White or Others
3.Contact Material: Phosphor Bronze 0.35mm Flat Pin
4.PLATING: Gold plating over nickel. Gold plating thickness
1.5u "/ 3u" / 6u "/ 15u" / 30u "/ 50u"

ELECTRICAL

1.Current Rating:1.5Amp
2.Voltage Rating:125VAC
3.Contact Resistance: 30 MΩ Max.
4.Insulation Resistance: 500 MΩ Min. @500VDC
5.Withstanding Voltage:1000VAC RMS 50Hz 1 minute

MECHANICAL

1.Durability : 750 cycles Min.
2.PCB Retention pre-solder : 1 LB MIN

ENVIRONMENTAL

1.Storage :-40°C~+80°C
2.Operation:-40°C~+70°C

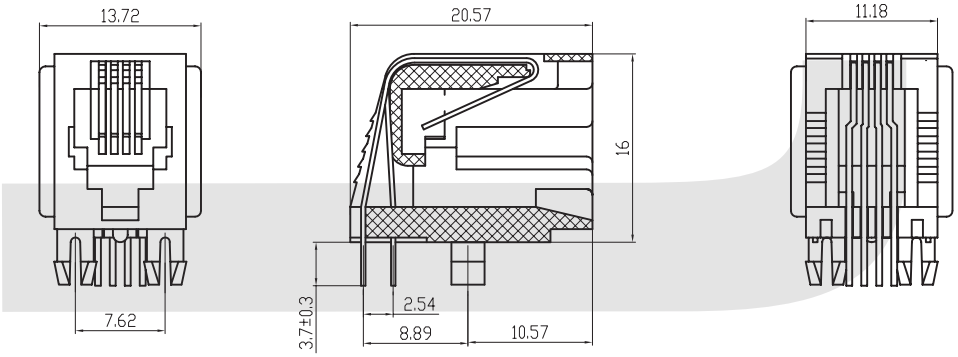

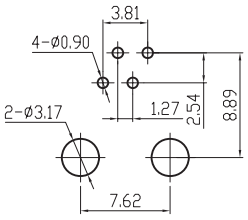

PC Board Layout

ORDER INFORMATION

KLS12-143 - 4P4C-W-B-XX-X

Part Number	Point NO.	Panel	Part Color	Gold Thickness	Plastic
	4P4C Point 4P2C Point	W-With Panel W/O-Without Panel	1-Black 2-Gray 3-White 4-IV	01-Fu" 02-3u" 03-6u" 04-15u" 05-30u" 06-50u	1-Nylon 2-PBT 3-ABS

PCB Modular Jack Series

KLS12-144-6P PCB Modular Jack 57 Series

MATERIAL

1.Housing Material: Glass Filled Polyester UL94V-0 PBT, NYLON
2.Housing Color: Black, Gray, Ivory, White or Others
3.Contact Material: Phosphor Bronze 0.35mm Flat Pin
4.PLATING: Gold plating over nickel. Gold plating thickness
1.5u "/ 3u" / 6u "/ 15u" / 30u "/ 50u"

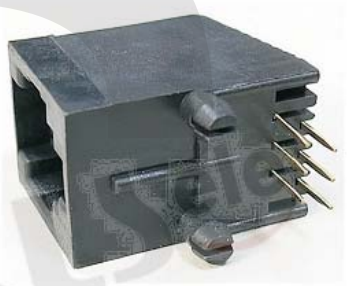

ELECTRICAL

1.Current Rating:1.5Amp
2.Voltage Rating:125VAC
3.Contact Resistance: 30 MΩ Max.
4.Insulation Resistance: 500 MΩ Min. @500VDC
5.Withstanding Voltage:1000VAC RMS 50Hz 1 minute

MECHANICAL

1.Durability : 750 cycles Min.
2.PCB Retention pre-solder : 1 LB MIN

ENVIRONMENTAL

1.Storage :-40ºC~+80ºC
2.Operation:-40ºC~+70ºC

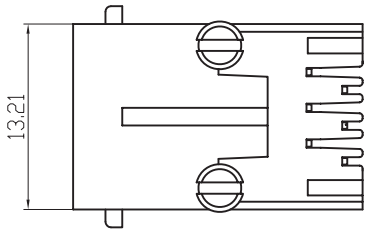

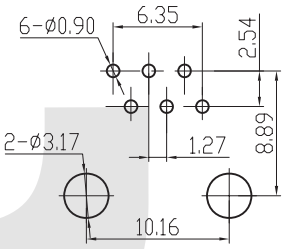

PC Board Layout

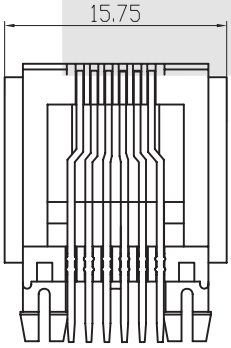

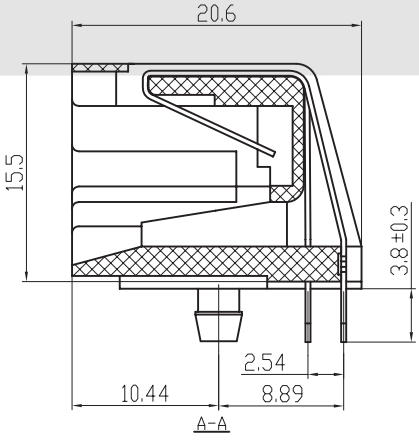

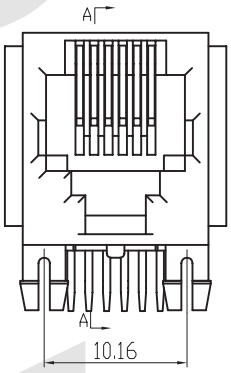

ORDER INFORMATION

KLS12-144 - 6P6C-W-B-XX-X

Part Number	Point NO.	Panel	Part Color	Gold Thickness	Plastic
	6P6C Point 6P4C Point 6P2C Point	W-With Panel W/O-Without Panel	1-Black 2-Gray 3-White 4-IV	01-Fu" 02-3u" 03-6u" 04-15u" 05-30u" 06-50u	1-Nylon 2-PBT 3-ABS

PCB Modular Jack Series

KLS12-145-8P PCB Modular Jack 57 Series



MATERIAL

1.Housing Material: Glass Filled Polyester UL94V-0 PBT, NYLON
2.Housing Color: Black, Gray, Ivory, White or Others
3.Contact Material: Phosphor Bronze 0.35mm Flat Pin
4.PLATING: Gold plating over nickel. Gold plating thickness
1.5u "/ 3u" / 6u "/ 15u" / 30u "/ 50u"

ELECTRICAL

1.Current Rating:1.5Amp
2.Voltage Rating:125VAC
3.Contact Resistance: 30 MΩ Max.
4.Insulation Resistance: 500 MΩ Min. @500VDC
5.Withstanding Voltage:1000VAC RMS 50Hz 1 minute

MECHANICAL

1.Durability : 750 cycles Min.
2.PCB Retention pre-solder : 1 LB MIN

ENVIRONMENTAL

1.Storage :-40ºC~+80ºC
2.Operation:-40ºC~+70ºC

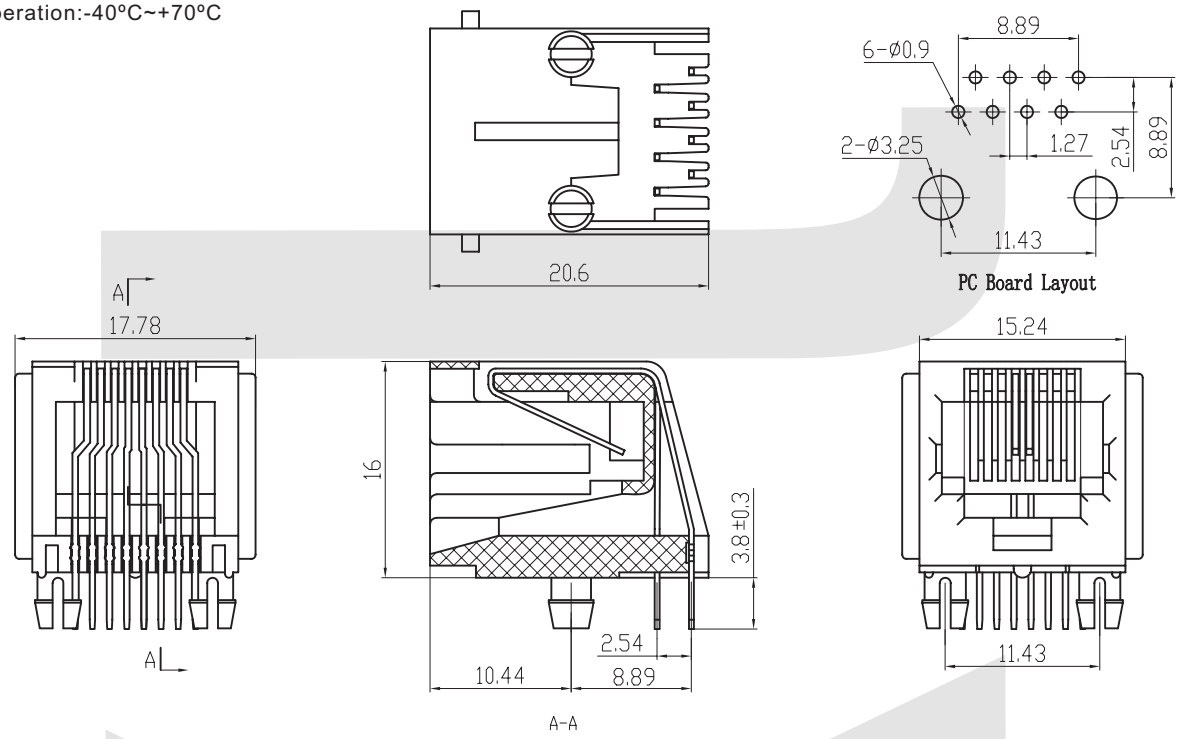

ORDER INFORMATION

KLS12-145 - 8P8C-W-B-XX-X

Part Number	Point NO.	Panel	Part Color	Gold Thickness	Plastic
	8P8C Point 8P6C Point 8P4C Point	W-With Panel W/O-Without Panel	1-Black 2-Gray 3-White 4-IV	01-Fu" 02-3u" 03-6u" 04-15u" 05-30u" 06-50u	1-Nylon 2-PBT 3-ABS

PCB Modular Jack Series

KLS12-146-4P PCB Modular Jack 57 Series

MATERIAL

1.Housing Material: Glass Filled Polyester UL94V-0 PBT, NYLON
2.Housing Color: Black, Gray, Ivory, White or Others
3.Contact Material: Phosphor Bronze 0.35mm Flat Pin
4.PLATING: Gold plating over nickel. Gold plating thickness
1.5u "/ 3u" / 6u "/ 15u" / 30u "/ 50u"



ELECTRICAL

1.Current Rating:1.5Amp
2.Voltage Rating:125VAC
3.Contact Resistance: 30 MΩ Max.
4.Insulation Resistance: 500 MΩ Min. @500VDC
5.Withstanding Voltage:1000VAC RMS 50Hz 1 minute

MECHANICAL

1.Durability : 750 cycles Min.
2.PCB Retention pre-solder : 1 LB MIN

ENVIRONMENTAL

1.Storage :-40°C~+80°C
2.Operation:-40°C~+70°C

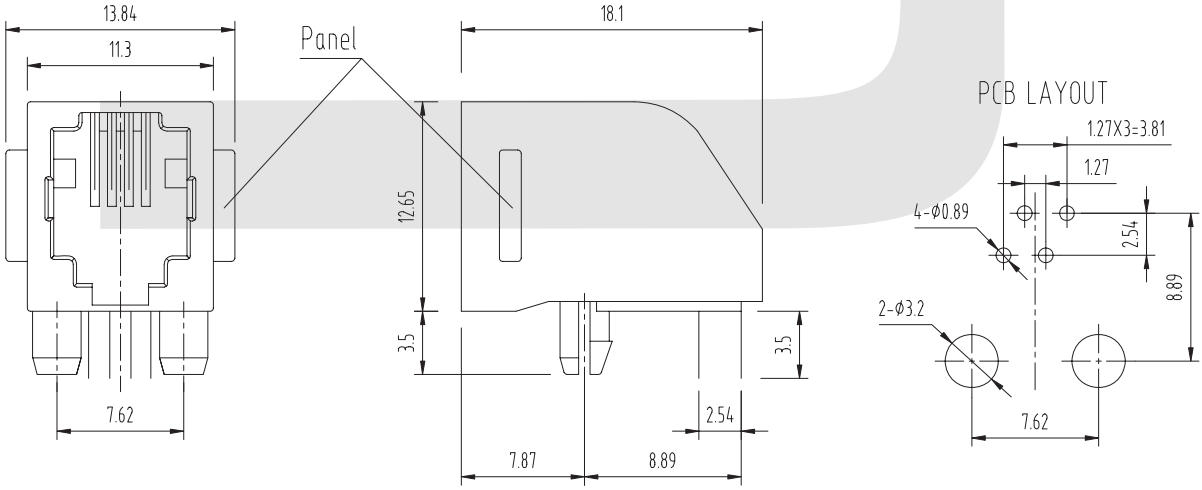

ORDER INFORMATION

KLS12-146 - 4P4C-W-B-XX-X

Part Number	Point NO.	Panel	Part Color	Gold Thickness	Plastic
	4P4C Point 4P2C Point	W-With Panel W/O-Without Panel	1-Black 2-Gray 3-White 4-IV	01-Fu" 02-3u" 03-6u" 04-15u" 05-30u" 06-50u	1-Nylon 2-PBT 3-ABS

PCB Modular Jack Series

KLS12-147-6P PCB Modular Jack 57 Series



MATERIAL

1.Housing Material: Glass Filled Polyester UL94V-0 PBT, NYLON
2.Housing Color: Black, Gray, Ivory, White or Others
3.Contact Material: Phosphor Bronze 0.35mm Flat Pin
4.PLATING: Gold plating over nickel. Gold plating thickness
1.5u "/ 3u" / 6u "/ 15u" / 30u "/ 50u"

ELECTRICAL

1.Current Rating:1.5Amp
2.Voltage Rating:125VAC
3.Contact Resistance: 30 MΩ Max.
4.Insulation Resistance: 500 MΩ Min. @500VDC
5.Withstanding Voltage:1000VAC RMS 50Hz 1 minute

MECHANICAL

1.Durability : 750 cycles Min.
2.PCB Retention pre-solder : 1 LB MIN

ENVIRONMENTAL

1.Storage :-40ºC~+80ºC
2.Operation:-40ºC~+70ºC

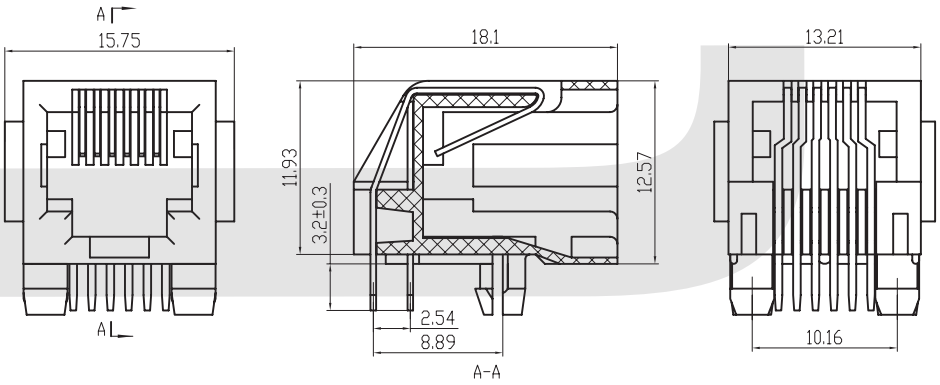

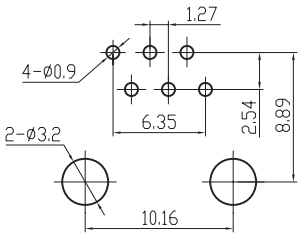

PC Board Layout

ORDER INFORMATION

KLS12-147 - 6P6C-W-B-XX-X

Part Number	Point NO.	Panel	Part Color	Gold Thickness	Plastic
	6P6C Point 6P4C Point 6P2C Point	W-With Panel W/O-Without Panel	1-Black 2-Gray 3-White 4-IV	01-Fu" 02-3u" 03-6u" 04-15u" 05-30u" 06-50u	1-Nylon 2-PBT 3-ABS

PCB Modular Jack Series

KLS12-148-8P PCB Modular Jack 57 Series



MATERIAL

1.Housing Material: Glass Filled Polyester UL94V-0 PBT, NYLON
2.Housing Color: Black, Gray, Ivory, White or Others
3.Contact Material: Phosphor Bronze 0.35mm Flat Pin
4.PLATING: Gold plating over nickel. Gold plating thickness
1.5u "/ 3u" / 6u "/ 15u" / 30u "/ 50u"

ELECTRICAL

1.Current Rating:1.5Amp
2.Voltage Rating:125VAC
3.Contact Resistance: 30 MΩ Max.
4.Insulation Resistance: 500 MΩ Min. @500VDC
5.Withstanding Voltage:1000VAC RMS 50Hz 1 minute

MECHANICAL

1.Durability : 750 cycles Min.
2.PCB Retention pre-solder : 1 LB MIN

ENVIRONMENTAL

1.Storage :-40°C~+80°C
2.Operation:-40°C~+70°C

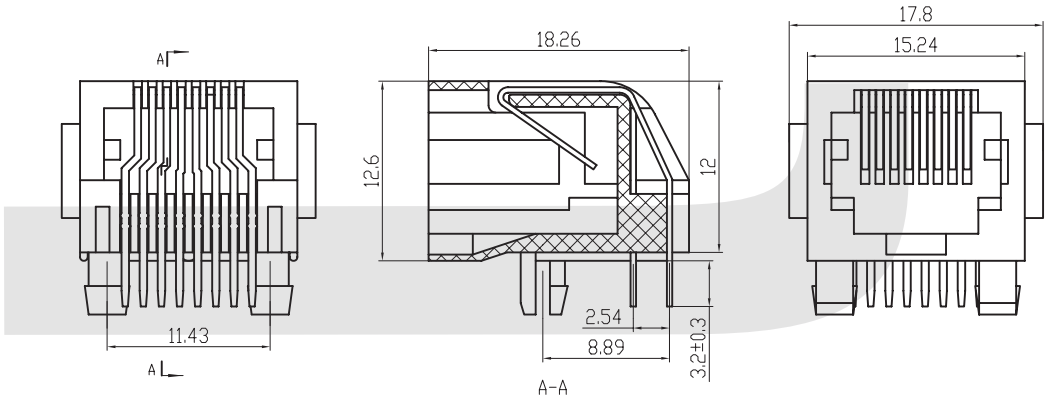

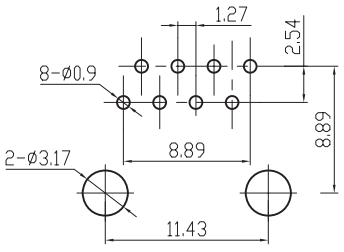

PC Board Layout

ORDER INFORMATION

KLS12-148 - 8P8C-W-B-XX-X

Part Number	Point NO.	Panel	Part Color	Gold Thickness	Plastic
	8P8C Point 8P6C Point 8P4C Point	W-With Panel W/O-Without Panel	1-Black 2-Gray 3-White 4-IV	01-Fu" 02-3u" 03-6u" 04-15u" 05-30u" 06-50u	1-Nylon 2-PBT 3-ABS

PCB Modular Jack Series

KLS12-149-4P PCB Modular Jack 59 Series



MATERIAL
1.Housing Material: Glass Filled Polyester UL94V-0 PBT, NYLON
2.Housing Color: Black, Gray, Ivory, White or Others
3.Contact Material: Phosphor Bronze Φ0.46mm
4.Plating: Gold plating over nickel. Gold plating thickness
1.5u "/ 3u" / 6u "/ 15u" / 30u "/ 50u"

ELECTRICAL
1.Current Rating:1.5Amp
2.Voltage Rating:125VAC
3.Contact Resistance: 30 MΩ Max.
4.Insulation Resistance: 500 MΩ Min. @500VDC
5.Withstanding Voltage:1000VAC RMS 50Hz 1 minute

MECHANICAL
1.Durability : 750 cycles Min.
2.PCB Retention pre-solder : 1 LB MIN

ENVIRONMENTAL
1.Storage :-40°C~+80°C
2.Operation:-40°C~+70°C

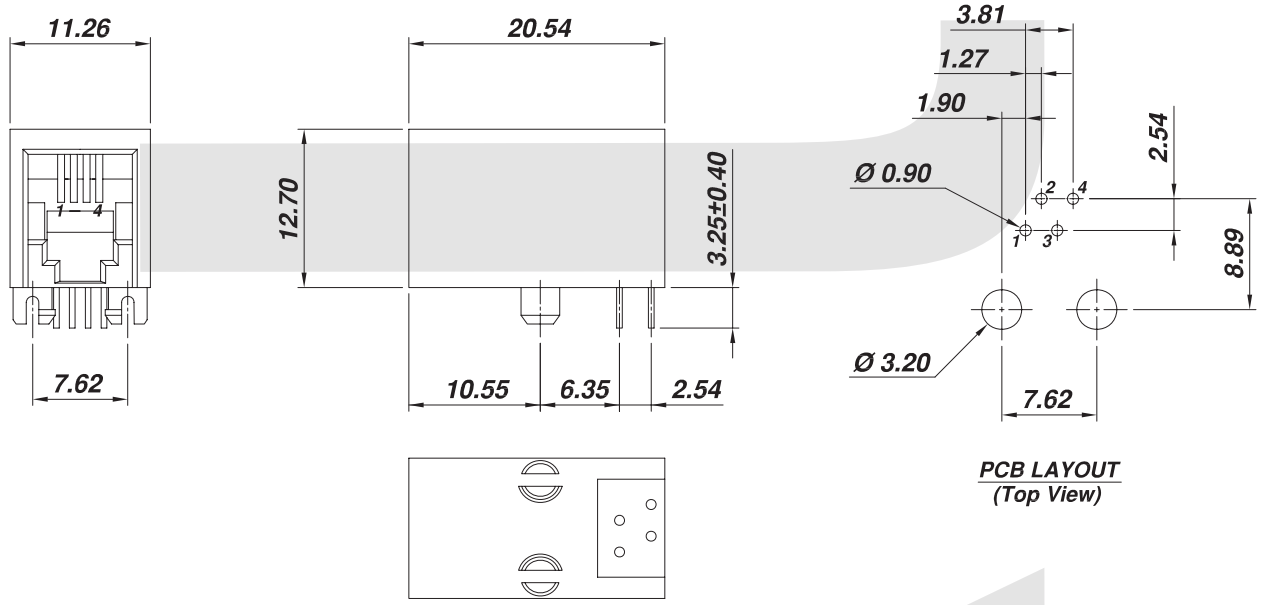

ORDER INFORMATION

KLS12-149 - 4P4C-W-B-XX-X

Part Number	Point NO.	Panel	Part Color	Gold Thickness	Plastic
	4P4C Point 4P2C Point	W-With Panel W/O-Without Panel	1-Black 2-Gray 3-White 4-IV	01-Fu" 02-3u" 03-6u" 04-15u" 05-30u" 06-50u	1-Nylon 2-PBT 3-ABS

PCB Modular Jack Series

KLS12-150-6P PCB Modular Jack 59 Series



MATERIAL

1.Housing Material: Glass Filled Polyester UL94V-0 PBT, NYLON
2.Housing Color: Black, Gray, Ivory, White or Others
3.Contact Material: Phosphor Bronze Φ0.46mm
4.Plating: Gold plating over nickel. Gold plating thickness
1.5u "/ 3u" / 6u "/ 15u" / 30u "/ 50u"

ELECTRICAL

1.Current Rating:1.5Amp
2.Voltage Rating:125VAC
3.Contact Resistance: 30 MΩ Max.
4.Insulation Resistance: 500 MΩ Min. @500VDC
5.Withstanding Voltage:1000VAC RMS 50Hz 1 minute

MECHANICAL

1.Durability : 750 cycles Min.
2.PCB Retention pre-solder : 1 LB MIN

ENVIRONMENTAL

1.Storage :-40°C~+80°C
2.Operation:-40°C~+70°C

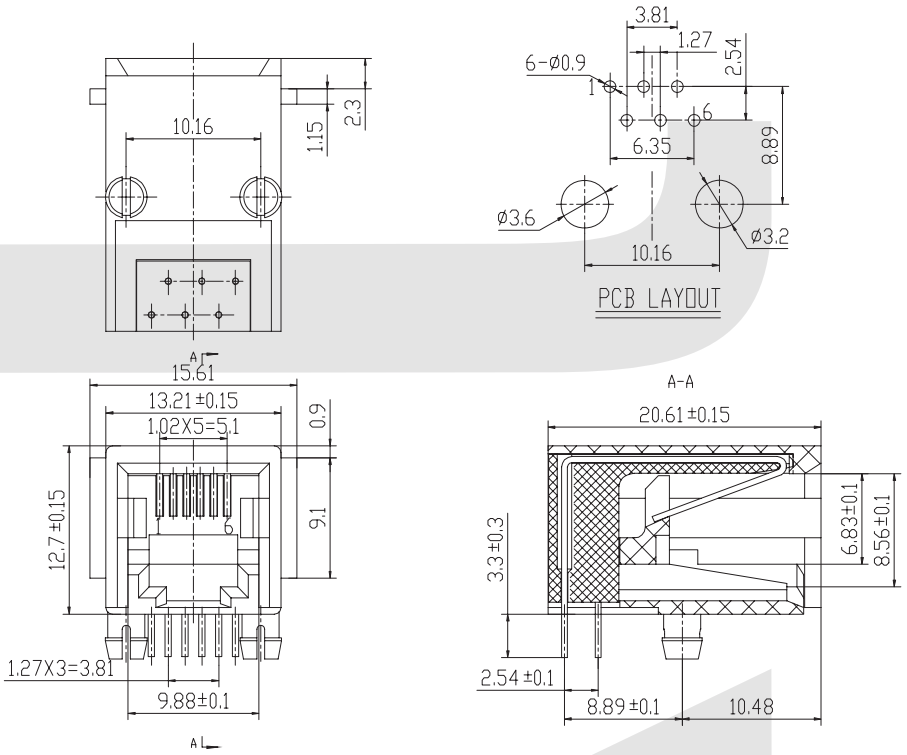

ORDER INFORMATION

KLS12-150 - 6P6C-W-B-XX-X

Part Number	Point NO.	Panel	Part Color	Gold Thickness	Plastic
	6P6C Point 6P4C Point 6P2C Point	W-With Panel W/O-Without Panel	1-Black 2-Gray 3-White 4-IV	01-Fu" 02-3u" 03-6u" 04-15u" 05-30u" 06-50u	1-Nylon 2-PBT 3-ABS

PCB Modular Jack Series

KLS12-151-8P PCB Modular Jack 59Series



MATERIAL

1.Housing Material: Glass Filled Polyester UL94V-0 PBT, NYLON
2.Housing Color: Black, Gray, Ivory, White or Others
3.Contact Material: Phosphor Bronze Φ0.46mm
4.Plating: Gold plating over nickel. Gold plating thickness
1.5u "/ 3u" / 6u "/ 15u" / 30u "/ 50u"

ELECTRICAL

1.Current Rating:1.5Amp
2.Voltage Rating:125VAC
3.Contact Resistance: 30 MΩ Max.
4.Insulation Resistance: 500 MΩ Min. @500VDC
5.Withstanding Voltage:1000VAC RMS 50Hz 1 minute

MECHANICAL

1.Durability : 750 cycles Min.
2.PCB Retention pre-solder : 1 LB MIN

ENVIRONMENTAL

1.Storage :-40°C~+80°C
2.Operation:-40°C~+70°C

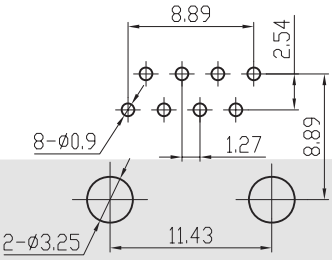

PC Board Layout

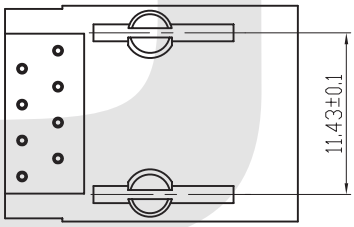

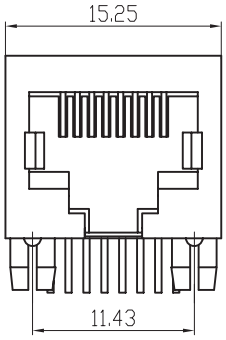

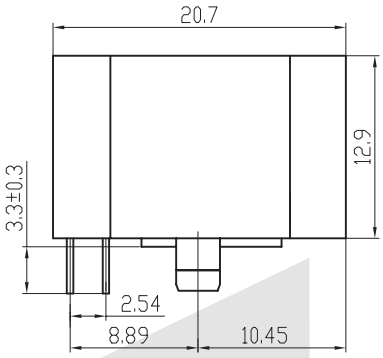

ORDER INFORMATION

KLS12-151 - 8P8C-B-XX-X

Part Number	Point NO.	Part Color	Gold Thickness	Plastic
	8P8C Point 8P6C Point 8P4C Point	1-Black 2-Gray 3-White 4-IV	01-Fu" 02-3u" 03-6u" 04-15u" 05-30u" 06-50u	1-Nylon 2-PBT 3-ABS

PCB Modular Jack Series

KLS12-152-6P PCB Modular Jack 52 Series

MATERIAL

1.Housing Material : Glass Filled Polyester UL94V-0 PBT, NYLON
2.Housing Color : Black, Gray, Ivory, White or others
3.Contact Material : Phosphor Bronze Φ0.46mm
4.PLATING: Gold plating over nickel. Gold plating thickness
1.5u″/3u″/6u″/15u″/30u″/50u″

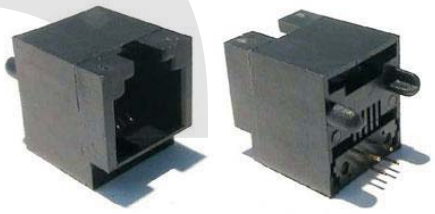

ELECTRICAL

1.Current Rating:1.5Amp
2.Voltage Rating:125VAC
3.Contact Resistance : 30MΩ Max.
4.Insulation Resistance : 500 MΩ Min @500VDC
5.Withstanding Voltage: 1000VAC RMS 50Hz 1 minute

MECHANICAL

1.Durability : 750 cycles Min
2.PCB Retention pre-solder : 1 LB Min

ENVIRONMENTAL

1.Storage :-40ºC~+80ºC
2.Operation:-40ºC~+70ºC

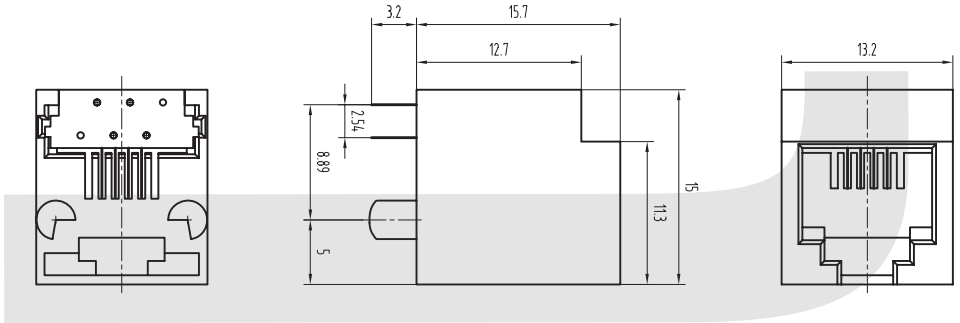

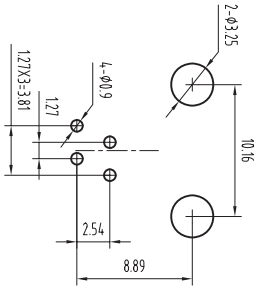

PCB LAYOUT

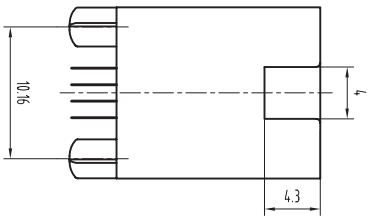

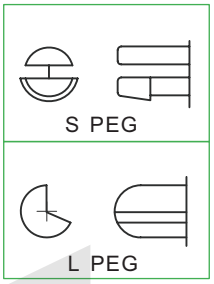

ORDER INFORMATION

KLS12-152 - 6P6C-L-B-XX-X

Part Number	Point NO.	Peg	Part Color	Gold Thickness	Plastic
	6P6C Point 6P4C Point 6P2C Point	L-L Peg S-Split Peg	1-Black 2-Gray 3-White 4-IV	01-Fu" 02-3u" 03-6u" 04-15u" 05-30u" 06-50u	1-Nylon 2-PBT 3-ABS

PCB Modular Jack Series

KLS12-153-4P PCB Modular Jack 52 Series



MATERIAL

1.Housing Material : Glass Filled Polyester UL94V-0 PBT, NYLON
2.Housing Color : Black, Gray, Ivory, White or others
3.Contact Material : Phosphor Bronze Φ0.46mm
4.PLATING: Gold plating over nickel. Gold plating thickness
1.5u″/3u″/6u″/15u″/30u″/50u″

ELECTRICAL

1.Current Rating:1.5Amp
2.Voltage Rating:125VAC
3.Contact Resistance : 30MΩ Max.
4.Insulation Resistance : 500 MΩ Min @500VDC
5.Withstanding Voltage: 1000VAC RMS 50Hz 1 minute

MECHANICAL

1.Durability : 750 cycles Min
2.PCB Retention pre-solder : 1 LB Min

ENVIRONMENTAL

1.Storage :-40°C~+80°C
2.Operation:-40°C~+70°C

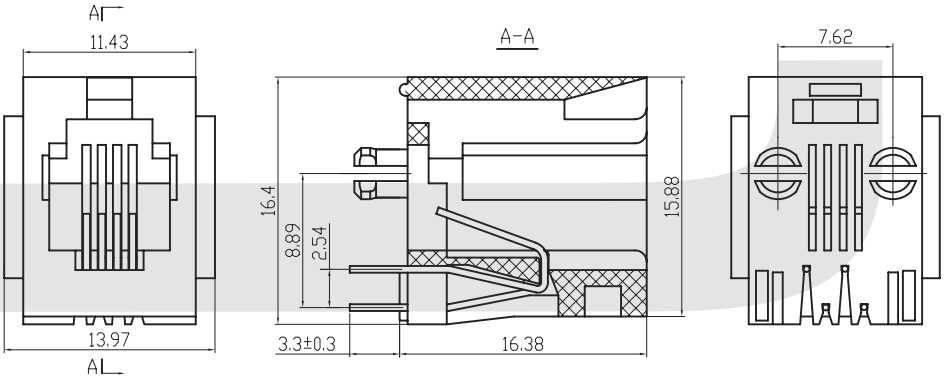

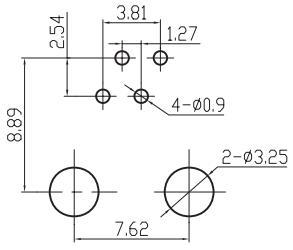

PC Board Layout

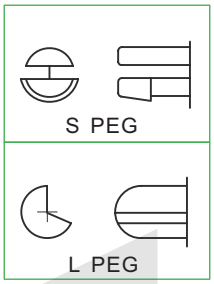

ORDER INFORMATION

KLS12-153 - 4P4C-W-L-B-XX-X

Part Number	Point NO.	Panel	Peg	Part Color	Gold Thickness	Plastic
	4P4C Point 4P2C Point	W-With Panel W/O-Without Panel	L-L Peg S-Split Peg	1-Black 2-Gray 3-White 4-IV	01-Fu" 02-3u" 03-6u" 04-15u" 05-30u" 06-50u	1-Nylon 2-PBT 3-ABS

PCB Modular Jack Series

KLS12-154-6P PCB Modular Jack 52 Series



MATERIAL

1.Housing Material : Glass Filled Polyester UL94V-0 PBT, NYLON
2.Housing Color : Black, Gray, Ivory, White or others
3.Contact Material : Phosphor Bronze Φ0.46mm
4.PLATING: Gold plating over nickel. Gold plating thickness
1.5u″/3u″/6u″/15u″/30u″/50u″

ELECTRICAL

1.Current Rating:1.5Amp
2.Voltage Rating:125VAC
3.Contact Resistance : 30MΩ Max.
4.Insulation Resistance : 500 MΩ Min @500VDC
5.Withstanding Voltage: 1000VAC RMS 50Hz 1 minute

MECHANICAL

1.Durability : 750 cycles Min
2.PCB Retention pre-solder : 1 LB Min

ENVIRONMENTAL

1.Storage :-40ºC~+80ºC
2.Operation:-40ºC~+70ºC

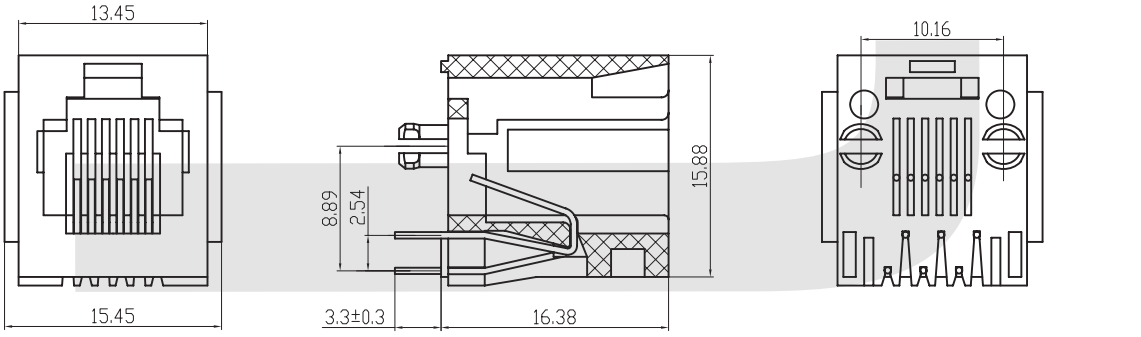

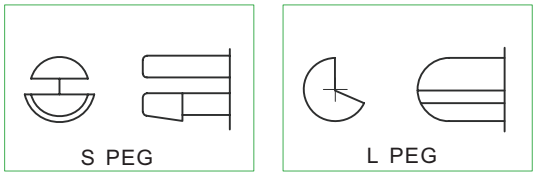

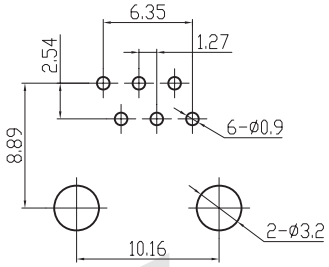

PC Board Layout

ORDER INFORMATION

KLS12-154 - 6P6C-W-L-B-XX-X

Part Number	Point NO.	Panel	Peg	Part Color	Gold Thickness	Plastic
	6P6C Point 6P4C Point 6P2C Point	W-With Panel W/O-Without Panel	L-L Peg S-Split Peg	1-Black 2-Gray 3-White 4-IV	01-Fu" 02-3u" 03-6u" 04-15u" 05-30u" 06-50u	1-Nylon 2-PBT 3-ABS

PCB Modular Jack Series

KLS12-155-6P PCB Modular Jack 52 Series

MATERIAL

1.Housing Material: Glass Filled Polyester UL94V-0 PBT, NYLON
2.Housing Color: Black, Gray, Ivory, White or others
3.Contact Material: Phosphor Bronze Φ0.46mm
4.PLATING: Gold plating over nickel. Gold plating thickness
1.5u "/ 3u" / 6u "/ 15u" / 30u "/ 50u"

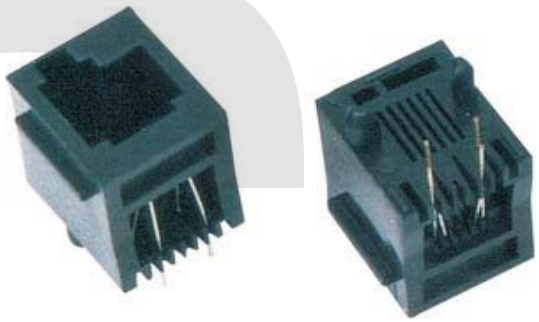

ELECTRICAL

1.Current Rating: 1.5 Amp
2.Voltage Rating: 125VAC
3.Contact Resistance: 30 MΩ Max.
4.Insulation Resistance: 500 MΩ Min. @ 500VDC
5.Withstanding Voltage: 1000VAC RMS 50Hz 1 minute

MECHANICAL

1.Durability : 750 cycles Min.
2.PCB Retention pre-solder : 1 LB MIN

ENVIRONMENTAL

1.Storage :-40°C~+80°C
2.Operation:-40°C~+70°C

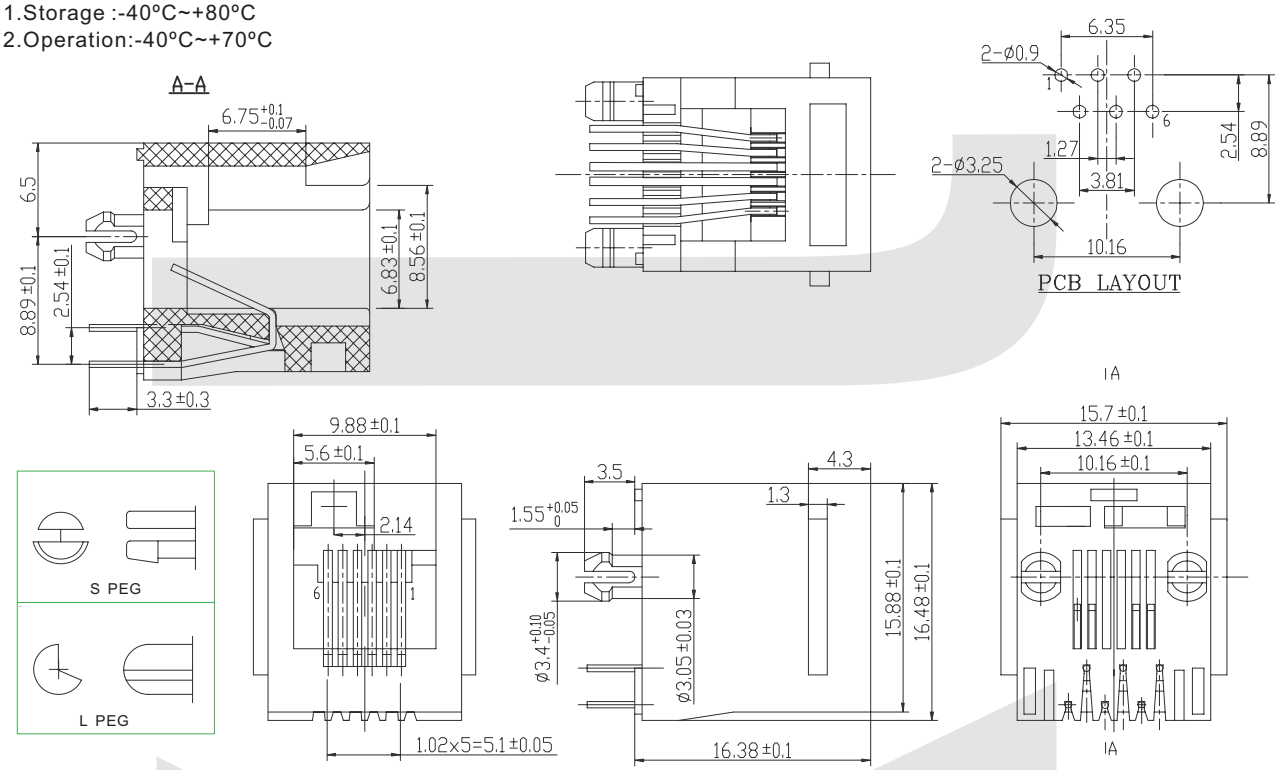

ORDER INFORMATION

KLS12-155 - 6P6C-W-L-B-XX-X

Part Number	Point NO.	Panel	Peg	Part Color	Gold Thickness	Plastic
	6P6C Point 6P4C Point 6P2C Point	W-With Panel W/O-Without Panel	L-L Peg S-Split Peg	1-Black 2-Gray 3-White 4-IV	01-Fu" 02-3u" 03-6u" 04-15u" 05-30u" 06-50u	1-Nylon 2-PBT 3-ABS

PCB Modular Jack Series

KLS12-156-8P PCB Modular Jack 52 Series



MATERIAL

1.Housing Material: Glass Filled Polyester UL94V-0 PBT, NYLON
2.Housing Color: Black, Gray, Ivory, White or others
3.Contact Material: Phosphor Bronze Φ0.46mm
4.PLATING: Gold plating over nickel. Gold plating thickness
1.5u "/ 3u" / 6u "/ 15u" / 30u "/ 50u"

ELECTRICAL

1.Current Rating: 1.5 Amp
2.Voltage Rating: 125VAC
3.Contact Resistance: 30 MΩ Max.
4.Insulation Resistance: 500 MΩ Min. @ 500VDC
5.Withstanding Voltage: 1000VAC RMS 50Hz 1 minute

MECHANICAL

1.Durability : 750 cycles Min.
2.PCB Retention pre-solder : 1 LB MIN

ENVIRONMENTAL

1.Storage :-40°C~+80°C
2.Operation:-40°C~+70°C

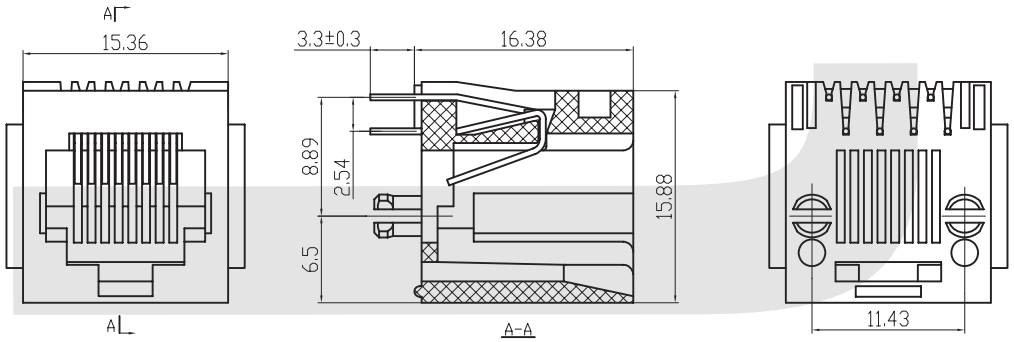

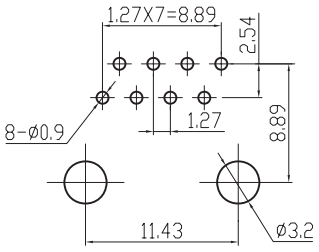

PC Board Layout

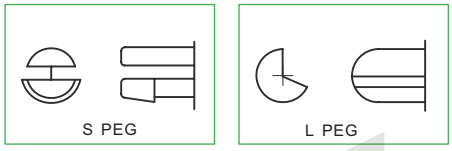

ORDER INFORMATION

KLS12-156 - 8P8C-W-L-B-XX-X

Part Number	Point NO.	Panel	Peg	Part Color	Gold Thickness	Plastic
	8P8C Point 8P6C Point 8P4C Point	W-With Panel W/O-Without Panel	L-L Peg S-Split Peg	1-Black 2-Gray 3-White 4-IV	01-Fu" 02-3u" 03-6u" 04-15u" 05-30u" 06-50u	1-Nylon 2-PBT 3-ABS

PCB Modular Jack Series

KLS12-157-8P PCB Modular Jack 52Series



MATERIAL

1. Housing Material : Glass Filled Plyester UL94V-0 PBT、NYLON
2. Housing Color : Black、 Gray、Ivory、 White or Others
3. Contact Material : Phosphor Bronze Φ0. 46mm
4. PLATING: Gold plating over nickel. Gold plating thickness
   1. 5u″/3u″/6u″/15u″/30u″/50u″
5. SHIELD : 0.23 Thickness Brass with nickel plated

ELECTRICAL

1.Current Rating: 1. 5 Amp
2.Voltage Rating: 125 VAC RMS
3. Contact Resistance : 30 Milliohms Max.
4. Insulation Resistance : 500 Megohms Min @ 500 VDC
5.Dielectric Withstanding Voltage: 1000VAC RMS 50Hz 1 minute

MECHANICAL

1. DURABILITY : 750 CYCLES MIN
2. PCB RETENTION PRE-SOLDER : 1 LB MIN

ENVIRONMENTAL

1. STORAGE :-40°C~+80°C
2.OPERATION:-40°C~+70°C

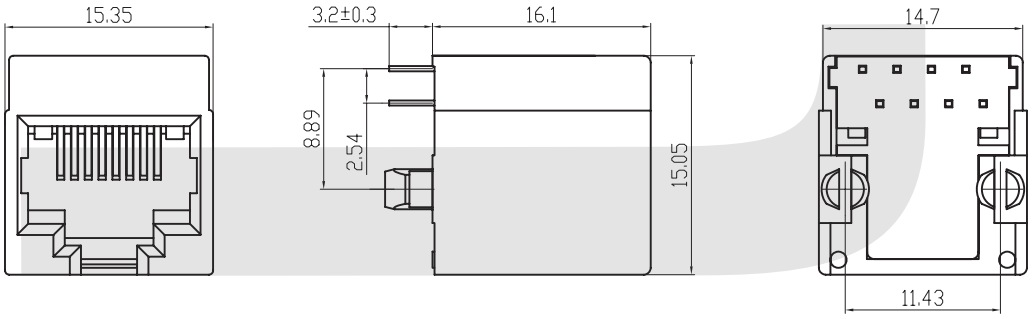

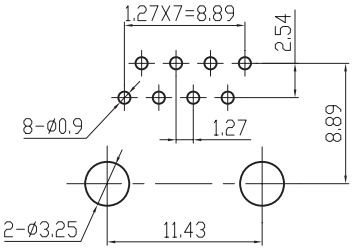

PC Board Layout

ORDER INFORMATION

KLS12-157 - 8P8C-B-XX-X

Part Number	Point NO.	Part Color	Gold Thickness	Plastic
	8P8C Point 8P6C Point 8P4C Point	1-Black 2-Gray 3-White 4-IV	01-Fu" 02-3u" 03-6u" 04-15u" 05-30u" 06-50u	1-Nylon 2-PBT 3-ABS

PCB Modular Jack Series

KLS12-158-8P PCB Modular Jack 52 Series With Shield



MATERIAL

1.Housing Material: Glass Filled Polyester UL94V-0 PBT, NYLON
2.Housing Color: Black, Gray, Ivory, White or others
3.Contact Material: Phosphor Bronze Φ0.46mm
4.PLATING: Gold plating over nickel. Gold plating thickness
1.5u "/ 3u" / 6u "/ 15u" / 30u "/ 50u"
5.SHIELD: 0.23 Thickness Brass with nickel plated

ELECTRICAL

1.Current Rating: 1.5 Amp
2.Voltage Rating: 125VAC
3.Contact Resistance: 30 MΩ Max.
4.Insulation Resistance: 500 MΩ Min. @ 500VDC
5.Withstanding Voltage: 1000VAC RMS 50Hz 1 minute

MECHANICAL

1.Durability : 750 cycles Min.
2.PCB Retention pre-solder : 1 LB MIN

ENVIRONMENTAL

1.Storage :-40°C~+80°C
2.Operation:-40°C~+70°C

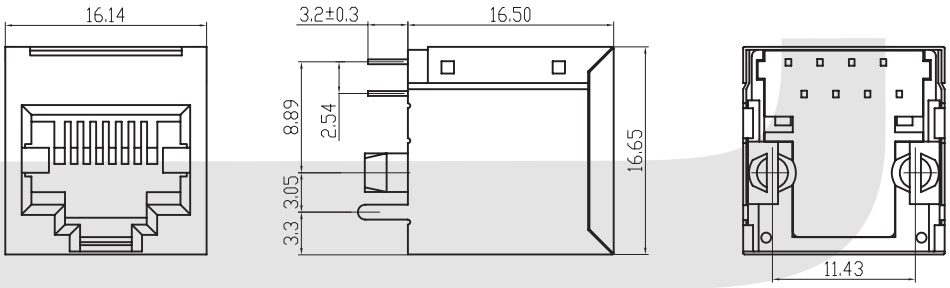

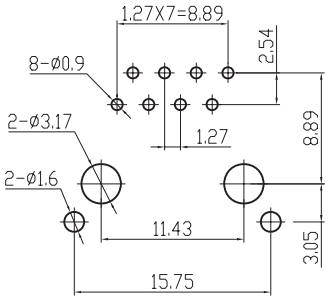

PC Board Layout

ORDER INFORMATION

KLS12-158 - 8P8C-W-1x1-XX-X

Part Number	Point NO.	Shield	Ports	Gold Thickness	Plastic
	8P8C Point	W-With Shield	1x1-1 Ports 1x4-4 Ports	01-Fu" 02-3u" 03-6u" 04-15u" 05-30u" 06-50u	1-Nylon 2-PBT 3-ABS

PCB Modular Jack Series

KLS12-158-8P PCB Modular Jack 52 Series With Shield



MATERIAL

1.Housing Material: Glass Filled Polyester UL94V-0 PBT, NYLON
2.Housing Color: Black, Gray, Ivory, White or others
3.Contact Material: Phosphor Bronze Φ0.46mm
4.PLATING: Gold plating over nickel. Gold plating thickness
1.5u "/ 3u" / 6u "/ 15u" / 30u "/ 50u"
5.SHIELD: 0.23 Thickness Brass with nickel plated

ELECTRICAL

1.Current Rating: 1.5 Amp
2.Voltage Rating: 125VAC
3.Contact Resistance: 30 MΩ Max.
4.Insulation Resistance: 500 MΩ Min. @ 500VDC
5.Withstanding Voltage: 1000VAC RMS 50Hz 1 minute

MECHANICAL

1.Durability : 750 cycles Min.
2.PCB Retention pre-solder : 1 LB MIN

ENVIRONMENTAL

1.Storage :-40°C~+80°C
2.Operation:-40°C~+70°C

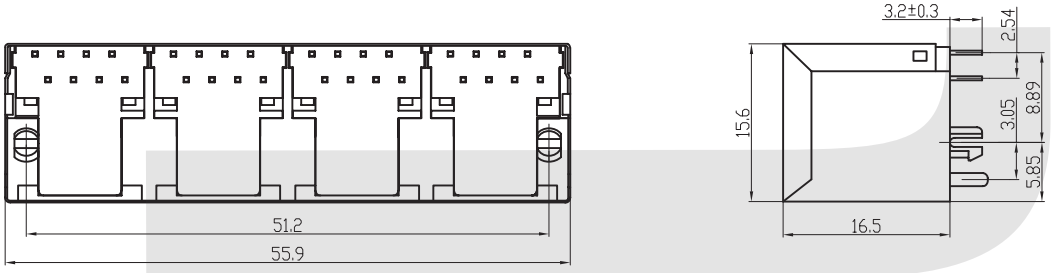

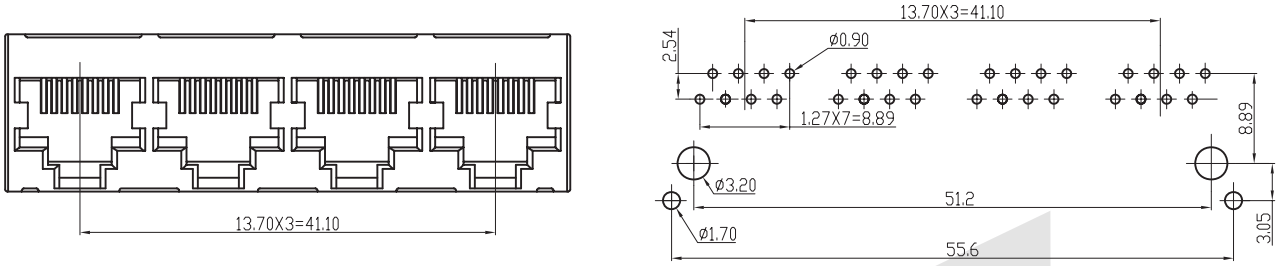

PC Board Layout

ORDER INFORMATION

KLS12-158 - 8P8C-W-1x4-XX-X

Part Number	Point NO.	Shield	Ports	Gold Thickness	Plastic
	8P8C Point	W-With Shield	1x1-1 Ports 1x4-4 Ports	01-Fu" 02-3u" 03-6u" 04-15u" 05-30u" 06-50u	1-Nylon 2-PBT 3-ABS

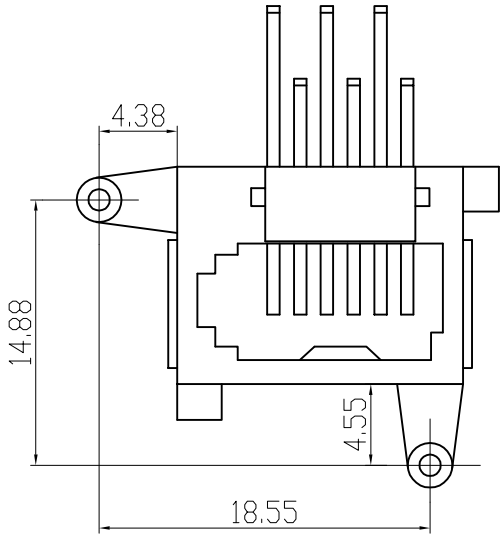

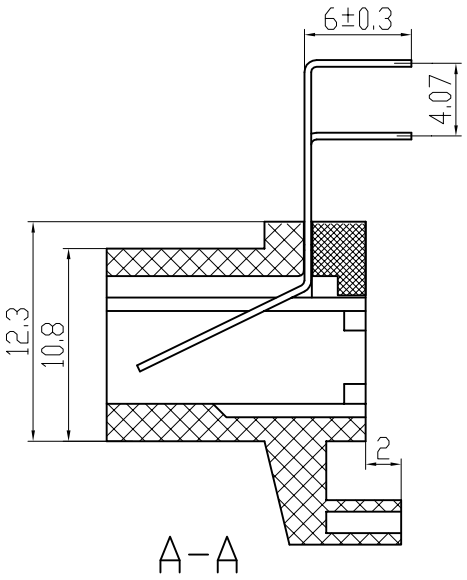

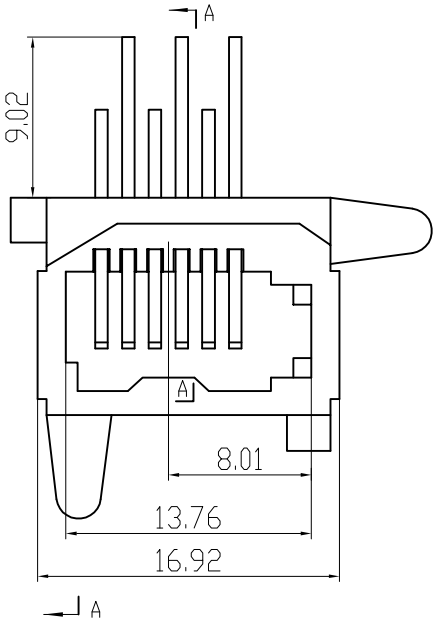

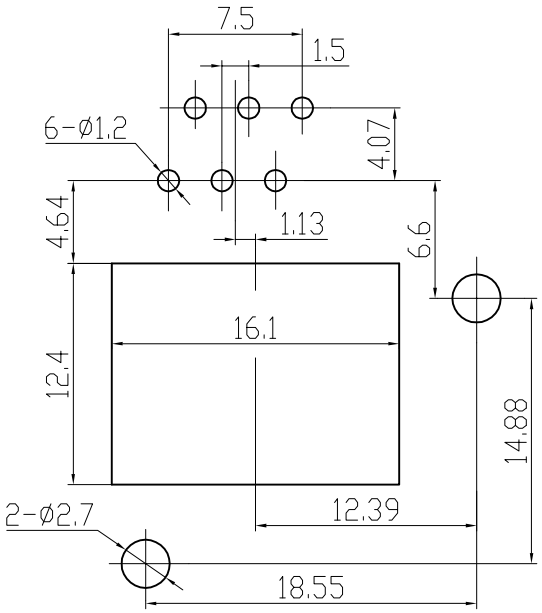

PC Board Layout

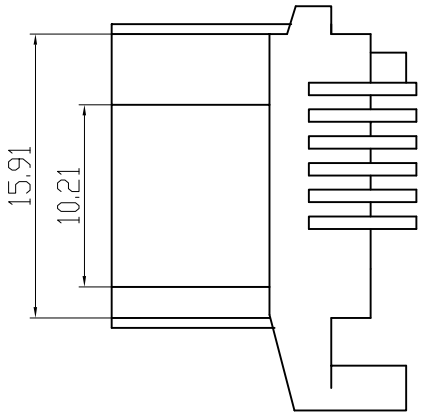

PCB JACK Specification

1. Insulation Resistance:500MΩMIN @ 500 VDC
2. Withstanding Voltage:AC1000V 50Hz or 60Hz 1min.
3. Durability:600 Mating Circles MIN.
4. Gold Plating:(3;6;15;30;50)u inch
5. Tolerances Unless Otherwise Specified
   .0±0.25 .00±0.20 .000±0.10

				KLS ELECTRONIC CO.,LTD.			
单位(units)	MM	设计(draw)		材料 (mt'l)		图名(name)	KLS12-165-6P6C
比例(scale)	1 : 1	审核(ch'k)					
版次(rev.)	A / 1	核准(app'd)		HOUSING	PBT	料号(Part number)	
视图(view)		日期(date)		PIN	Qsn6.5-0.1	图档(File Name)	

PCB Modular Jack Series

XII

KLS12-301-4P PCB Modular Jack 51 Series



MATERIAL
1.Housing Material: Glass Filled Polyester UL94V-0 PBT, NYLON
2.Housing Color: Black, Gray, Ivory, White or Others
3.Contact Material: Phosphor Bronze Φ0.46mm
4.Plating: Gold plating over nickel. Gold plating thickness
1.5u "/ 3u" / 6u "/ 15u" / 30u "/ 50u"

ELECTRICAL
1.Current Rating:1.5Amp
2.Voltage Rating:125VAC
3.Contact Resistance: 30 MΩ Max.
4.Insulation Resistance: 500 MΩ Min. @500VDC
5.Withstanding Voltage:1000VAC RMS 50Hz 1 minute

MECHANICAL
1.Durability : 750 cycles Min.
2.PCB Retention pre-solder : 1 LB MIN

ENVIRONMENTAL
1.Storage :-40°C~+80°C
2.Operation:-40°C~+70°C

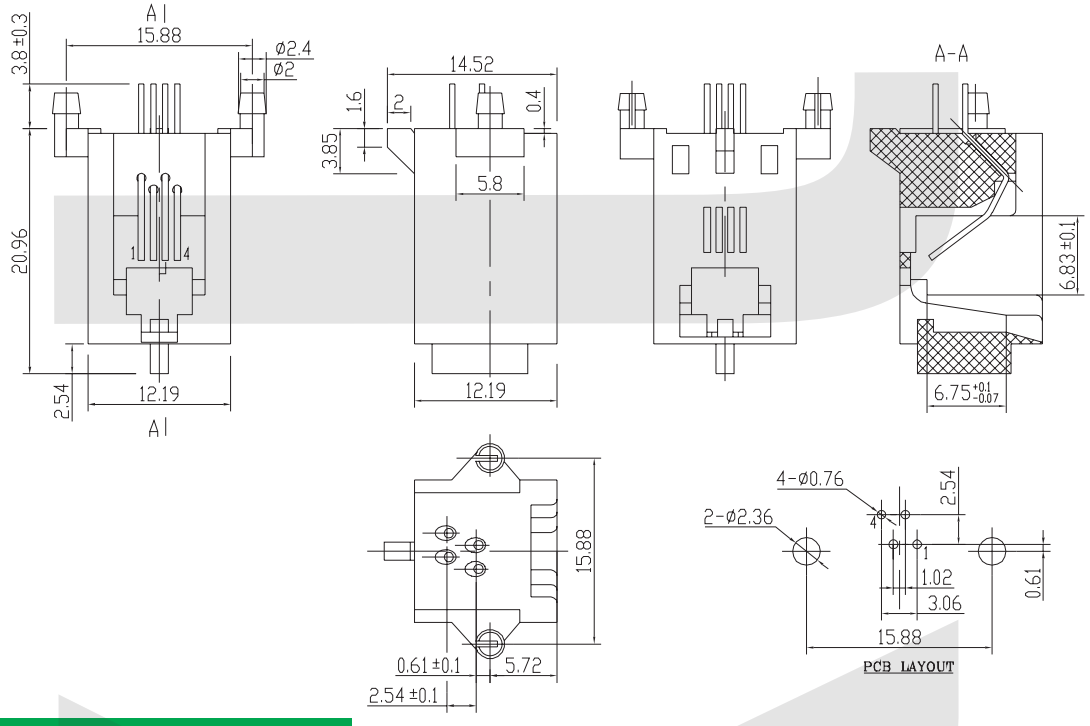

ORDER INFORMATION

KLS12-301 - 4P4C-X-XX-X

Part Number	Point NO.	Part Color	Gold Thickness	Plastic
	4P4C Point 4P2C Point	1-Black 2-Gray 3-White 4-IV	01-Fu" 02-3u" 03-6u" 04-15u" 05-30u" 06-50u	1-Nylon 2-PBT 3-ABS

PCB Modular Jack Series

KLS12-301-6P PCB Modular Jack 51 Series



MATERIAL

1.Housing Material: Glass Filled Polyester UL94V-0 PBT, NYLON
2.Housing Color: Black, Gray, Ivory, White or Others
3.Contact Material: Phosphor Bronze Φ0.46mm
4.Plating: Gold plating over nickel. Gold plating thickness
1.5u "/ 3u" / 6u "/ 15u" / 30u "/ 50u"

ELECTRICAL

1.Current Rating:1.5Amp
2.Voltage Rating:125VAC
3.Contact Resistance: 30 MΩ Max.
4.Insulation Resistance: 500 MΩ Min. @500VDC
5.Withstanding Voltage:1000VAC RMS 50Hz 1 minute

MECHANICAL

1.Durability : 750 cycles Min.
2.PCB Retention pre-solder : 1 LB MIN

ENVIRONMENTAL

1.Storage :-40°C~+80°C
2.Operation:-40°C~+70°C

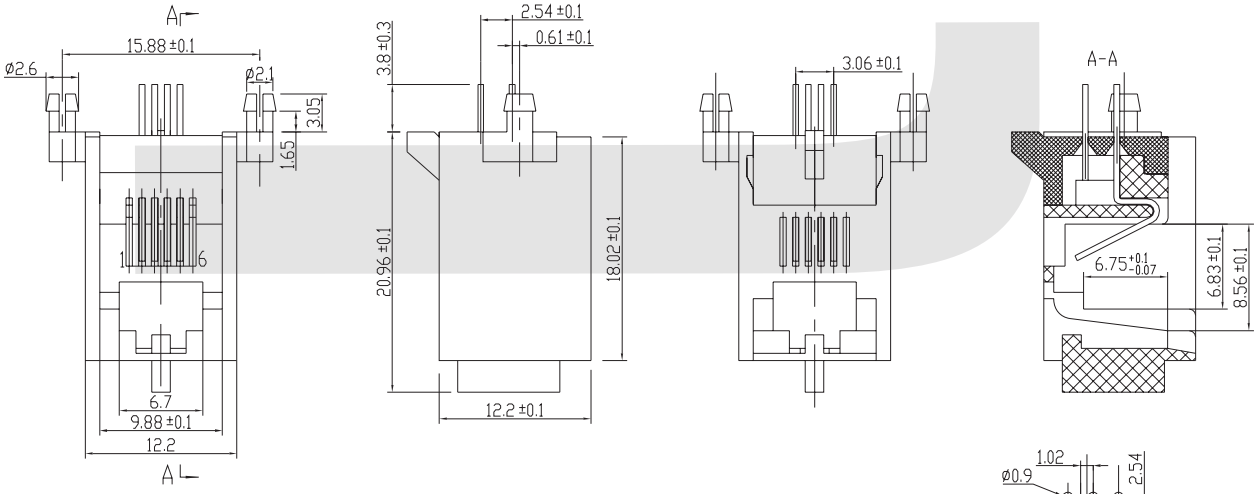

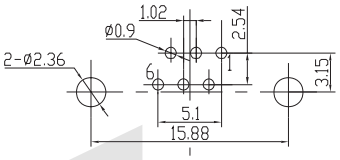

PCB LAYOUT

ORDER INFORMATION

KLS12-301 - 6P6C-X-XX-X

Part Number	Point NO.	Part Color	Gold Thickness	Plastic
	6P6C Point 6P4C Point 6P2C Point	1-Black 2-Gray 3-White 4-IV	01-Fu" 02-3u" 03-6u" 04-15u" 05-30u" 06-50u	1-Nylon 2-PBT 3-ABS

PCB Modular Jack Series

KLS12-302-6P PCB Modular Jack 56 Series

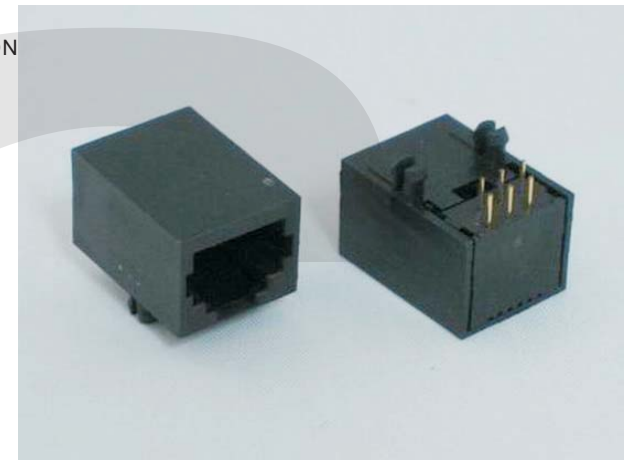

MATERIAL

1.Housing Material : Glass Filled Polyester UL94V-0 PBT, NYLON
2.Housing Color : Black, Gray, Ivory, White or others
3.Contact Material : Phosphor Bronze 0.35mm Flat Pin
4.PLATING: Gold plating over nickel. Gold plating thickness
1.5u″/3u″/6u″/15u″/30u″/50u″

ELECTRICAL

1.Current Rating:1.5Amp
2.Voltage Rating:125VAC
3.Contact Resistance : 30MΩ Max.
4.Insulation Resistance : 500 MΩ Min @500VDC
5.Withstanding Voltage: 1000VAC RMS 50Hz 1 minute

MECHANICAL

1.Durability : 750 cycles Min
2.PCB Retention pre-solder : 1 LB Min

ENVIRONMENTAL

1.Storage :-40ºC~+80ºC
2.Operation:-40ºC~+70ºC

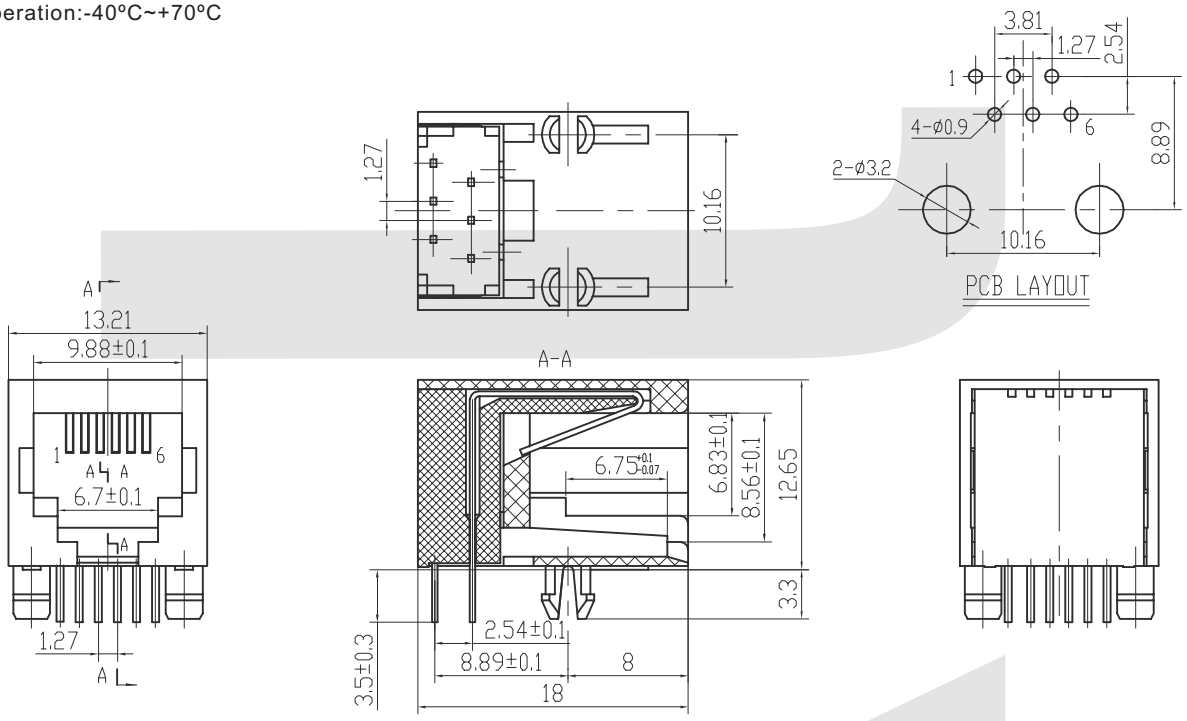

ORDER INFORMATION

KLS12-302 - 6P6C - B -XX-X

Part Number	Point NO.	Part Color	Gold Thickness	Plastic
	6P6C Point6	1-Black 2-Gray 3-White 4-IV	01-Fu" 02-3u" 03-6u" 04-15u" 05-30u" 06-50u	1-Nylon 2-PBT 3-ABS

PCB Modular Jack Series

KLS12-302-10P PCB Modular Jack 56 Series



MATERIAL

1.Housing Material : Glass Filled Polyester UL94V-0 PBT, NYLON
2.Housing Color : Black, Gray, Ivory, White or others
3.Contact Material : Phosphor Bronze Φ0.46mm
4.PLATING: Gold plating over nickel. Gold plating thickness
1.5u″/3u″/6u″/15u″/30u″/50u″

ELECTRICAL

1.Current Rating:1.5Amp
2.Voltage Rating:125VAC
3.Contact Resistance : 30MΩ Max.
4.Insulation Resistance : 500 MΩ Min @500VDC
5.Withstanding Voltage: 1000VAC RMS 50Hz 1 minute

MECHANICAL

1.Durability : 750 cycles Min
2.PCB Retention pre-solder : 1 LB Min

ENVIRONMENTAL

1.Storage :-40ºC~+80ºC
2.Operation:-40ºC~+70ºC

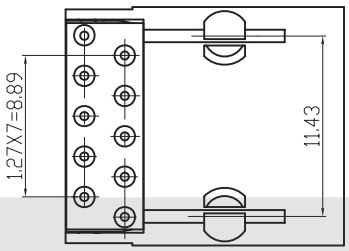

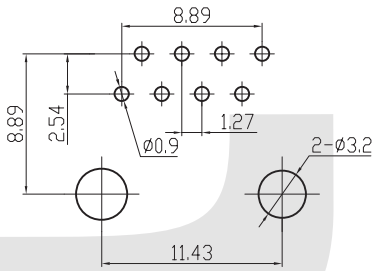

PC Board Layout

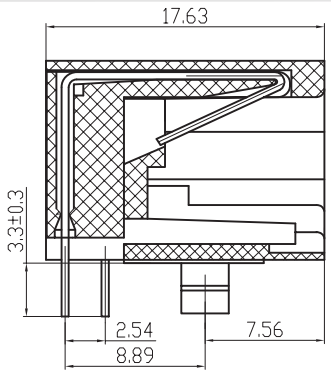

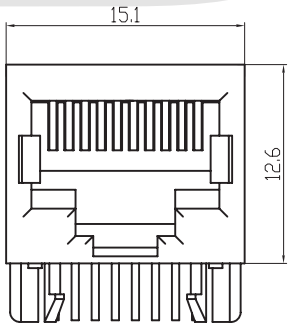

ORDER INFORMATION

KLS12-302 - 10P8C-B-XX-X

Part Number	Point NO.	Part Color	Gold Thickness	Plastic
	10P10C Point 10P8C Point	1-Black 2-Gray 3-White 4-IV	01-Fu" 02-3u" 03-6u" 04-15u" 05-30u" 06-50u	1-Nylon 2-PBT 3-ABS

PCB Modular Jack Series

KLS12-302-10P PCB Modular Jack 56 Series 1x2 Ports



MATERIAL

1.Housing Material : Glass Filled Polyester UL94V-0 PBT, NYLON
2.Housing Color : Black, Gray, Ivory, White or others
3.Contact Material : Phosphor Bronze Φ0.46mm
4.PLATING: Gold plating over nickel. Gold plating thickness
1.5u″/3u″/6u″/15u″/30u″/50u″

ELECTRICAL

1.Current Rating:1.5Amp
2.Voltage Rating:125VAC
3.Contact Resistance : 30MΩ Max.
4.Insulation Resistance : 500 MΩ Min @500VDC
5.Withstanding Voltage: 1000VAC RMS 50Hz 1 minute

MECHANICAL

1.Durability : 750 cycles Min
2.PCB Retention pre-solder : 1 LB Min

ENVIRONMENTAL

1.Storage :-40°C~+80°C
2.Operation:-40°C~+70°C

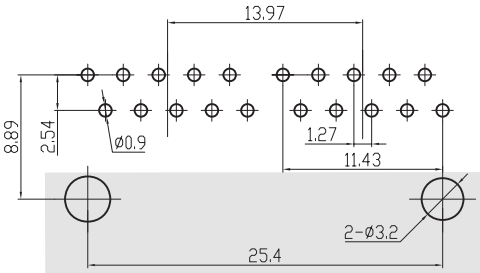

PC Board Layout

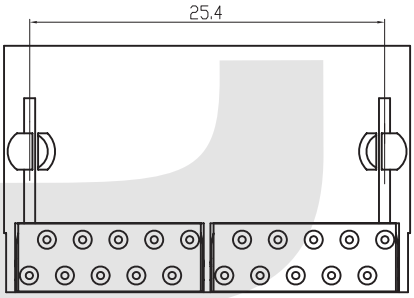

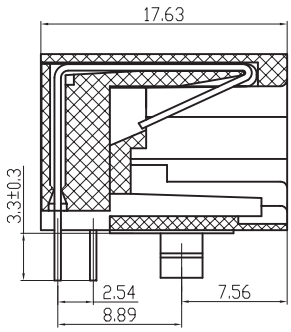

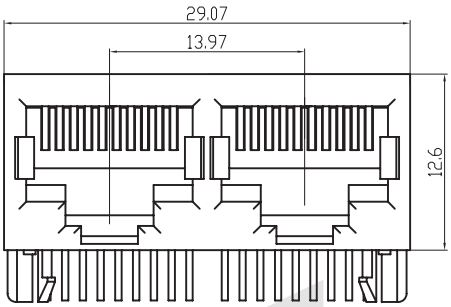

ORDER INFORMATION

KLS12-302 - 10P10C-1x2-B-XX-X

Part Number	Point NO.	Ports	Part Color	Gold Thickness	Plastic
	10P10C Point 10P8C Point	1x2-2 Ports 1x4-4 Ports	1-Black 2-Gray 3-White 4-IV	01-Fu" 02-3u" 03-6u" 04-15u" 05-30u" 06-50u	1-Nylon 2-PBT 3-ABS

PCB Modular Jack Series

XII

KLS12-302-10P PCB Modular Jack 56 Series 1x4 Ports



MATERIAL
1.Housing Material : Glass Filled Polyester UL94V-0 PBT, NYLON
2.Housing Color : Black, Gray, Ivory, White or others
3.Contact Material : Phosphor Bronze Φ0.46mm
4.PLATING: Gold plating over nickel. Gold plating thickness
1.5u″/3u″/6u″/15u″/30u″/50u″

ELECTRICAL
1.Current Rating:1.5Amp
2.Voltage Rating:125VAC
3.Contact Resistance : 30MΩ Max.
4.Insulation Resistance : 500 MΩ Min @500VDC
5.Withstanding Voltage: 1000VAC RMS 50Hz 1 minute

MECHANICAL
1.Durability : 750 cycles Min
2.PCB Retention pre-solder : 1 LB Min

ENVIRONMENTAL
1.Storage :-40ºC~+80ºC
2.Operation:-40ºC~+70ºC

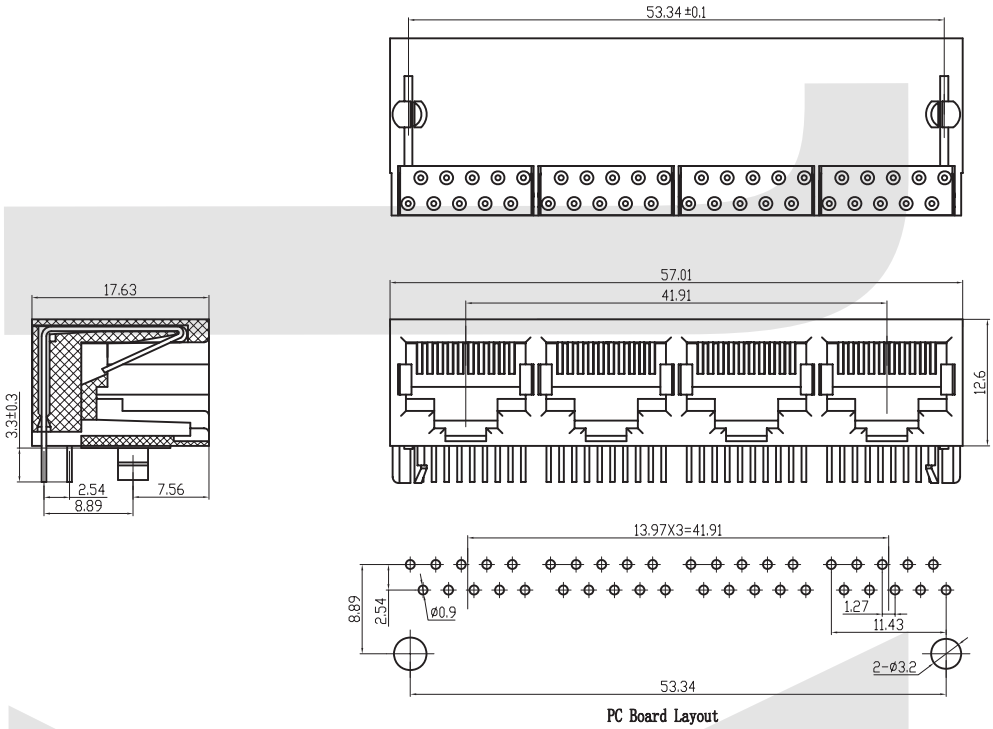

PC Board Layout

ORDER INFORMATION

KLS12-302 - 10P10C-1x4-B-XX-X

Part Number	Point NO.	Ports	Part Color	Gold Thickness	Plastic
	10P10C Point 10P8C Point	1x2-2 Ports 1x4-4 Ports	1-Black 2-Gray 3-White 4-IV	01-Fu" 02-3u" 03-6u" 04-15u" 05-30u" 06-50u	1-Nylon 2-PBT 3-ABS

PCB Modular Jack Series

KLS12-303-6P PCB Modular Jack 52 Series 1x1 Ports



MATERIAL

1.Housing Material: Glass Filled Polyester UL94V-0 PBT, NYLON
2.Housing Color: Black, Gray, Ivory, White or others
3.Contact Material: Phosphor Bronze Φ0.46mm
4.Plating: Gold plating over nickel. Gold plating thickness
1.5u "/ 3u" / 6u "/ 15u" / 30u "/ 50u"

ELECTRICAL

1.Current Rating: 1.5 Amp
2.Voltage Rating: 125VAC
3.Contact Resistance: 30 MΩ Max.
4.Insulation Resistance: 500 MΩ Min. @ 500VDC
5.Withstanding Voltage: 1000VAC RMS 50Hz 1 minute

MECHANICAL

1.Durability : 750 cycles Min.
2.PCB Retention pre-solder : 1 LB MIN

ENVIRONMENTAL

1.Storage :-40°C~+80°C
2.Operation:-40°C~+70°C

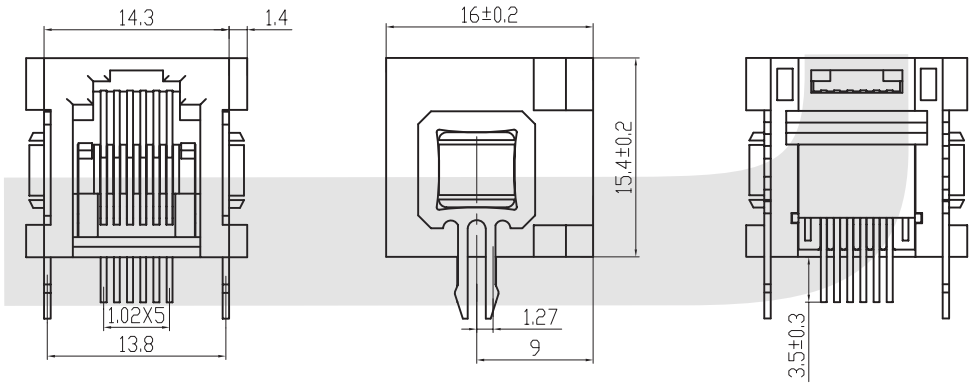

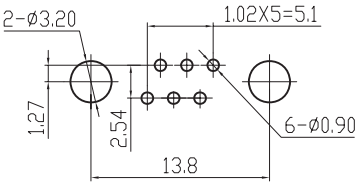

PC Board Layout

ORDER INFORMATION

KLS12-303 -6P6C- 1x1-1-1-XX-X-X

Part Number	Point NO.	Ports	Iron Peg	Angle	Gold Thickness	Color	Plastic
	6P6C Point 6P4C Point	1x1-1 Ports 1x2-2 Ports 1x3-3 Ports 1x4-4 Ports 1x5-5 Ports 1x6-6 Ports 1x7-7 Ports 1x8-8 Ports	0-Without Iron Peg 1-With Iron Peg	1-90 Angle 2-180 Angle	01-Fu" 02-3u" 03-6u" 04-15u" 05-30u" 06-50u	B-Black G-Gray W-White I-Iv	1-Nylon 2-PBT 3-ABS

PCB Modular Jack Series

KLS12-303-6P PCB Modular Jack 52 Series 1x2 Ports



MATERIAL

1.Housing Material: Glass Filled Polyester UL94V-0 PBT, NYLON
2.Housing Color: Black, Gray, Ivory, White or others
3.Contact Material: Phosphor Bronze Φ0.46mm
4.Plating: Gold plating over nickel. Gold plating thickness
1.5u "/ 3u" / 6u "/ 15u" / 30u "/ 50u"

ELECTRICAL

1.Current Rating: 1.5 Amp
2.Voltage Rating: 125VAC
3.Contact Resistance: 30 MΩ Max.
4.Insulation Resistance: 500 MΩ Min. @ 500VDC
5.Withstanding Voltage: 1000VAC RMS 50Hz 1 minute

MECHANICAL

1.Durability : 750 cycles Min.
2.PCB Retention pre-solder : 1 LB MIN

ENVIRONMENTAL

1.Storage :-40ºC~+80ºC
2.Operation:-40ºC~+70ºC

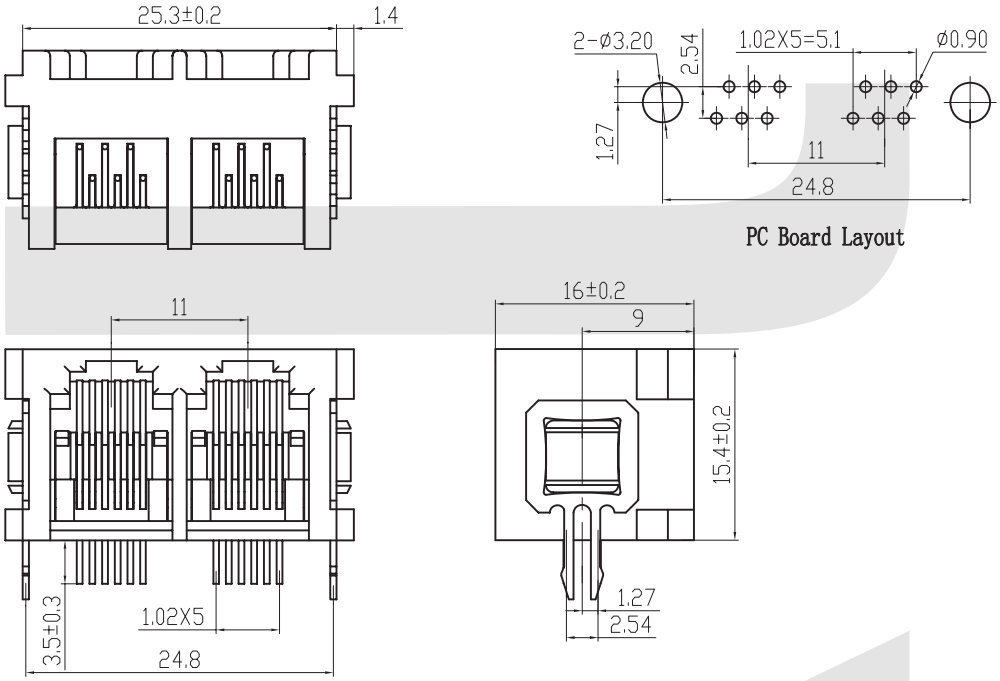

ORDER INFORMATION

KLS12-303 -6P6C- 1x2-1-1-XX-X-X

Part Number	Point NO.	Ports	Iron Peg	Angle	Gold Thickness	Color	Plastic
	6P6C Point 6P4C Point	1x1-1 Ports 1x2-2 Ports 1x3-3 Ports 1x4-4 Ports 1x5-5 Ports 1x6-6 Ports 1x7-7 Ports 1x8-8 Ports	0-Without Iron Peg 1-With Iron Peg	1-90 Angle 2-180 Angle	01-Fu" 02-3u" 03-6u" 04-15u" 05-30u" 06-50u	B-Black G-Gray W-White I-Iv	1-Nylon 2-PBT 3-ABS

PCB Modular Jack Series

KLS12-303-6P PCB Modular Jack 52 Series 1x3 Ports



MATERIAL

1.Housing Material: Glass Filled Polyester UL94V-0 PBT, NYLON
2.Housing Color: Black, Gray, Ivory, White or others
3.Contact Material: Phosphor Bronze Φ0.46mm
4.Plating: Gold plating over nickel. Gold plating thickness
1.5u "/ 3u" / 6u "/ 15u" / 30u "/ 50u"

ELECTRICAL

1.Current Rating: 1.5 Amp
2.Voltage Rating: 125VAC
3.Contact Resistance: 30 MΩ Max.
4.Insulation Resistance: 500 MΩ Min. @ 500VDC
5.Withstanding Voltage: 1000VAC RMS 50Hz 1 minute

MECHANICAL

1.Durability : 750 cycles Min.
2.PCB Retention pre-solder : 1 LB MIN

ENVIRONMENTAL

1.Storage :-40°C~+80°C
2.Operation:-40°C~+70°C

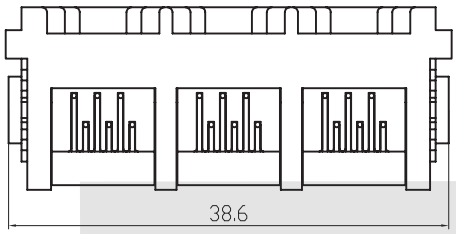

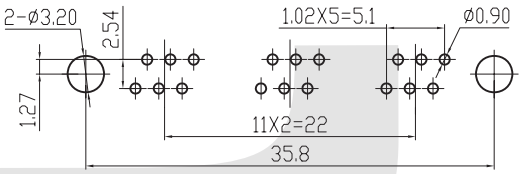

PC Board Layout

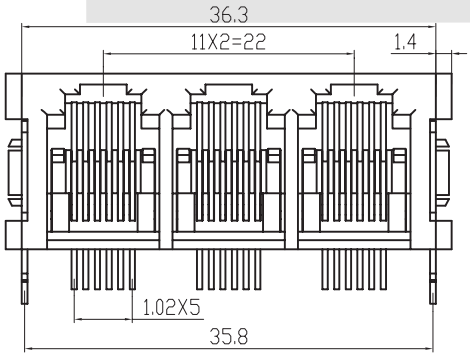

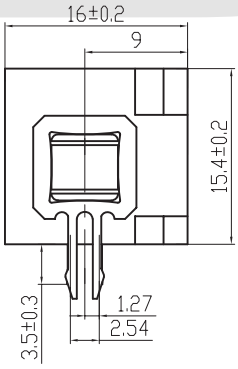

ORDER INFORMATION

KLS12-303 -6P6C- 1x3-1-1-XX-X-X

Part Number	Point NO.	Ports	Iron Peg	Angle	Gold Thickness	Color	Plastic
	6P6C Point 6P4C Point	1x1-1 Ports 1x2-2 Ports 1x3-3 Ports 1x4-4 Ports 1x5-5 Ports 1x6-6 Ports 1x7-7 Ports 1x8-8 Ports	0-Without Iron Peg 1-With Iron Peg	1-90 Angle 2-180 Angle	01-Fu" 02-3u" 03-6u" 04-15u" 05-30u" 06-50u	B-Black G-Gray W-White I-Iv	1-Nylon 2-PBT 3-ABS

PCB Modular Jack Series

KLS12-303-6P PCB Modular Jack 52 Series 1x4 Ports



MATERIAL

1.Housing Material: Glass Filled Polyester UL94V-0 PBT, NYLON
2.Housing Color: Black, Gray, Ivory, White or others
3.Contact Material: Phosphor Bronze Φ0.46mm
4.Plating: Gold plating over nickel. Gold plating thickness
1.5u "/ 3u" / 6u "/ 15u" / 30u "/ 50u"

ELECTRICAL

1.Current Rating: 1.5 Amp
2.Voltage Rating: 125VAC
3.Contact Resistance: 30 MΩ Max.
4.Insulation Resistance: 500 MΩ Min. @ 500VDC
5.Withstanding Voltage: 1000VAC RMS 50Hz 1 minute

MECHANICAL

1.Durability : 750 cycles Min.
2.PCB Retention pre-solder : 1 LB MIN

ENVIRONMENTAL

1.Storage :-40ºC~+80ºC
2.Operation:-40ºC~+70ºC

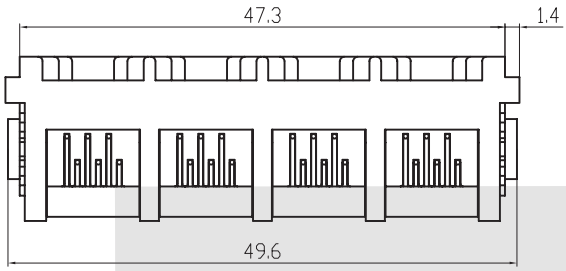

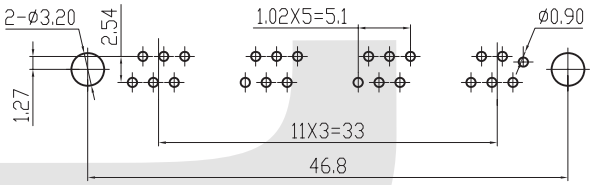

PC Board Layout

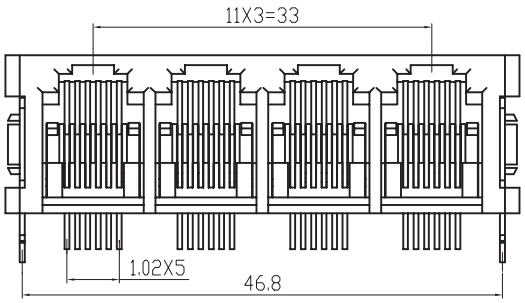

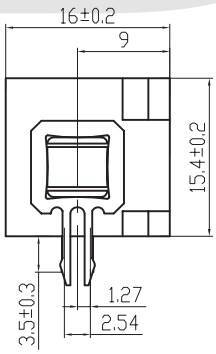

ORDER INFORMATION

KLS12-303 -6P6C- 1x4-1-1-XX-X-X

Part Number	Point NO.	Ports	Iron Peg	Angle	Gold Thickness	Color	Plastic
	6P6C Point 6P4C Point	1x1-1 Ports 1x2-2 Ports 1x3-3 Ports 1x4-4 Ports 1x5-5 Ports 1x6-6 Ports 1x7-7 Ports 1x8-8 Ports	0-Without Iron Peg 1-With Iron Peg	1-90 Angle 2-180 Angle	01-Fu" 02-3u" 03-6u" 04-15u" 05-30u" 06-50u	B-Black G-Gray W-White I-Iv	1-Nylon 2-PBT 3-ABS

PCB Modular Jack Series

KLS12-303-6P PCB Modular Jack 52 Series 1x5 Ports



MATERIAL

1.Housing Material: Glass Filled Polyester UL94V-0 PBT, NYLON
2.Housing Color: Black, Gray, Ivory, White or others
3.Contact Material: Phosphor Bronze Φ0.46mm
4.Plating: Gold plating over nickel. Gold plating thickness
1.5u "/ 3u" / 6u "/ 15u" / 30u "/ 50u"

ELECTRICAL

1.Current Rating: 1.5 Amp
2.Voltage Rating: 125VAC
3.Contact Resistance: 30 MΩ Max.
4.Insulation Resistance: 500 MΩ Min. @ 500VDC
5.Withstanding Voltage: 1000VAC RMS 50Hz 1 minute

MECHANICAL

1.Durability : 750 cycles Min.
2.PCB Retention pre-solder : 1 LB MIN

ENVIRONMENTAL

1.Storage :-40°C~+80°C
2.Operation:-40°C~+70°C

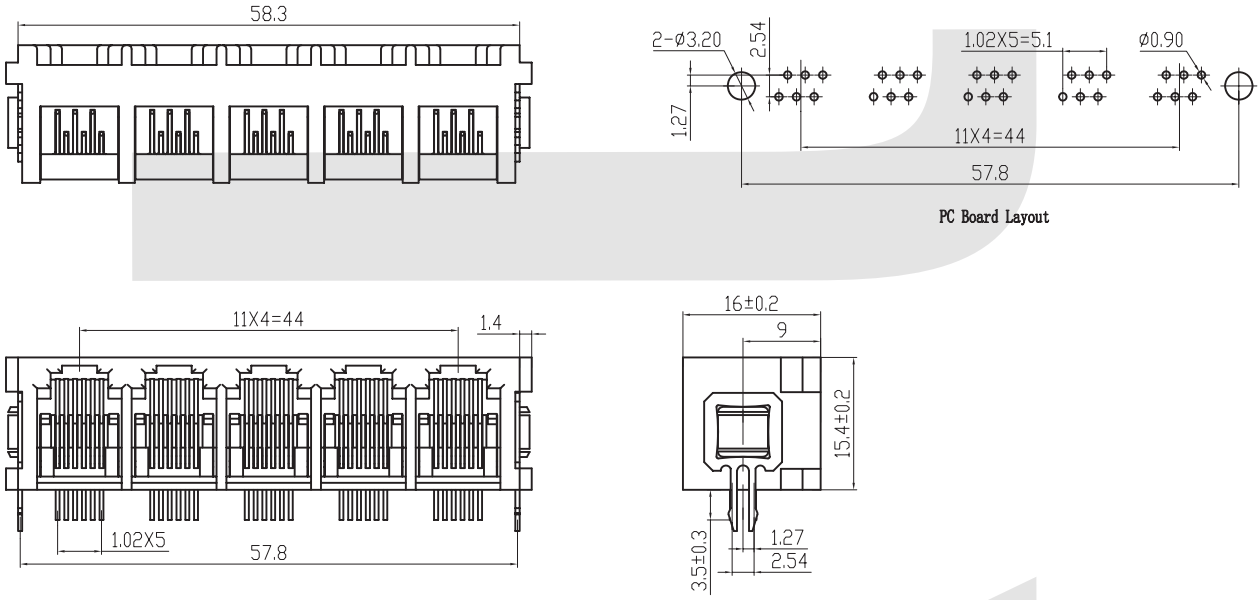

ORDER INFORMATION

KLS12-303 -6P6C- 1x5-1-1-XX-X-X

Part Number	Point NO.	Ports	Iron Peg	Angle	Gold Thickness	Color	Plastic
	6P6C Point 6P4C Point	1x1-1 Ports 1x2-2 Ports 1x3-3 Ports 1x4-4 Ports 1x5-5 Ports 1x6-6 Ports 1x7-7 Ports 1x8-8 Ports	0-Without Iron Peg 1-With Iron Peg	1-90 Angle 2-180 Angle	01-Fu" 02-3u" 03-6u" 04-15u" 05-30u" 06-50u	B-Black G-Gray W-White I-Iv	1-Nylon 2-PBT 3-ABS

PCB Modular Jack Series

KLS12-303-6P PCB Modular Jack 52 Series 1x6 Ports



MATERIAL

1.Housing Material: Glass Filled Polyester UL94V-0 PBT, NYLON
2.Housing Color: Black, Gray, Ivory, White or others
3.Contact Material: Phosphor Bronze Φ0.46mm
4.Plating: Gold plating over nickel. Gold plating thickness
1.5u "/ 3u" / 6u "/ 15u" / 30u "/ 50u"

ELECTRICAL

1.Current Rating: 1.5 Amp
2.Voltage Rating: 125VAC
3.Contact Resistance: 30 MΩ Max.
4.Insulation Resistance: 500 MΩ Min. @ 500VDC
5.Withstanding Voltage: 1000VAC RMS 50Hz 1 minute

MECHANICAL

1.Durability : 750 cycles Min.
2.PCB Retention pre-solder : 1 LB MIN

ENVIRONMENTAL

1.Storage :-40°C~+80°C
2.Operation:-40°C~+70°C

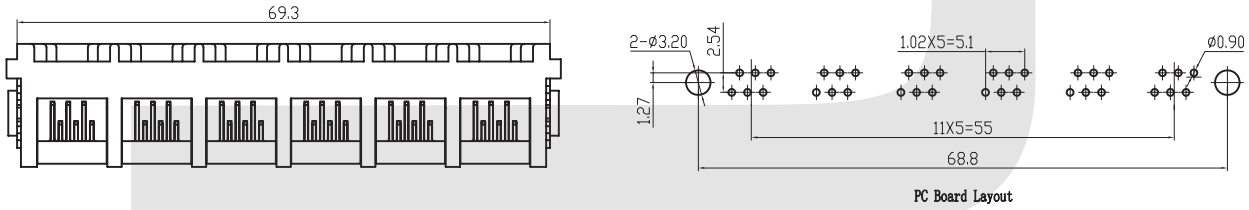

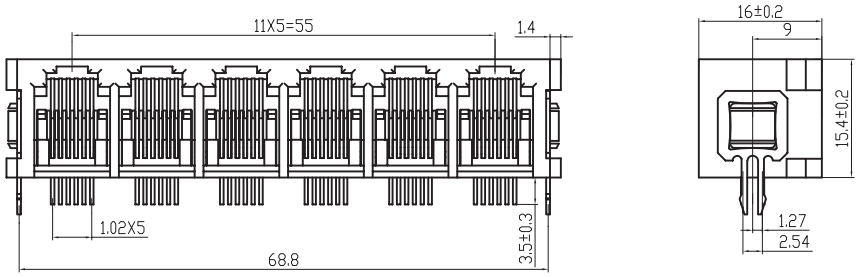

ORDER INFORMATION

KLS12-303 -6P6C- 1x6-1-1-XX-X-X

Part Number	Point NO.	Ports	Iron Peg	Angle	Gold Thickness	Color	Plastic
	6P6C Point 6P4C Point	1x1-1 Ports 1x2-2 Ports 1x3-3 Ports 1x4-4 Ports 1x5-5 Ports 1x6-6 Ports 1x7-7 Ports 1x8-8 Ports	0-Without Iron Peg 1-With Iron Peg	1-90 Angle 2-180 Angle	01-Fu" 02-3u" 03-6u" 04-15u" 05-30u" 06-50u	B-Black G-Gray W-White I-Iv	1-Nylon 2-PBT 3-ABS

PCB Modular Jack Series

KLS12-303-6P PCB Modular Jack 52 Series 1x7 Ports



MATERIAL

1.Housing Material: Glass Filled Polyester UL94V-0 PBT, NYLON
2.Housing Color: Black, Gray, Ivory, White or others
3.Contact Material: Phosphor Bronze Φ0.46mm
4.Plating: Gold plating over nickel. Gold plating thickness
1.5u "/ 3u" / 6u "/ 15u" / 30u "/ 50u"

ELECTRICAL

1.Current Rating: 1.5 Amp
2.Voltage Rating: 125VAC
3.Contact Resistance: 30 MΩ Max.
4.Insulation Resistance: 500 MΩ Min. @ 500VDC
5.Withstanding Voltage: 1000VAC RMS 50Hz 1 minute

MECHANICAL

1.Durability : 750 cycles Min.
2.PCB Retention pre-solder : 1 LB MIN

ENVIRONMENTAL

1.Storage :-40°C~+80°C
2.Operation:-40°C~+70°C

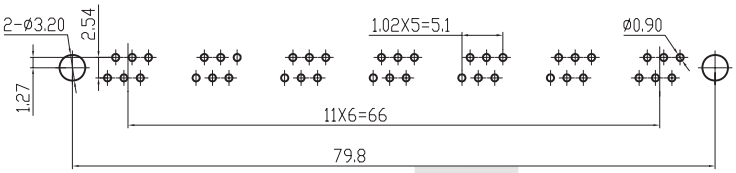

PC Board Layout

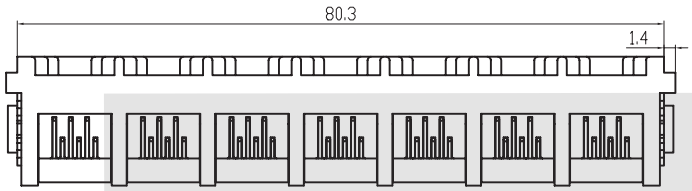

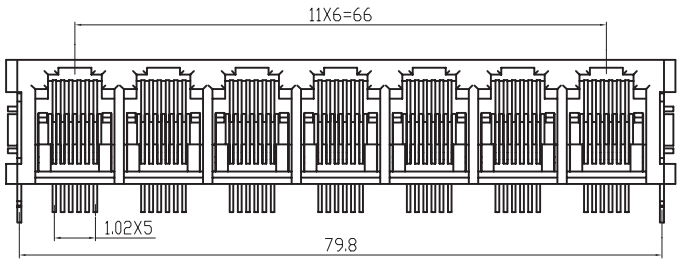

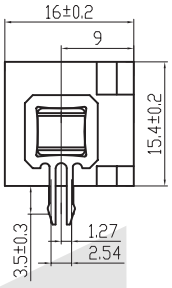

ORDER INFORMATION

KLS12-303 -6P6C- 1x7-1-1-XX-X-X

Part Number	Point NO.	Ports	Iron Peg	Angle	Gold Thickness	Color	Plastic
	6P6C Point 6P4C Point	1x1-1 Ports 1x2-2 Ports 1x3-3 Ports 1x4-4 Ports 1x5-5 Ports 1x6-6 Ports 1x7-7 Ports 1x8-8 Ports	0-Without Iron Peg 1-With Iron Peg	1-90 Angle 2-180 Angle	01-Fu" 02-3u" 03-6u" 04-15u" 05-30u" 06-50u	B-Black G-Gray W-White I-Iv	1-Nylon 2-PBT 3-ABS

PCB Modular Jack Series

KLS12-303-6P PCB Modular Jack 52 Series 1x8 Ports



MATERIAL

1.Housing Material: Glass Filled Polyester UL94V-0 PBT, NYLON
2.Housing Color: Black, Gray, Ivory, White or others
3.Contact Material: Phosphor Bronze Φ0.46mm
4.Plating: Gold plating over nickel. Gold plating thickness
1.5u "/ 3u" / 6u "/ 15u" / 30u "/ 50u"

ELECTRICAL

1.Current Rating: 1.5 Amp
2.Voltage Rating: 125VAC
3.Contact Resistance: 30 MΩ Max.
4.Insulation Resistance: 500 MΩ Min. @ 500VDC
5.Withstanding Voltage: 1000VAC RMS 50Hz 1 minute

MECHANICAL

1.Durability : 750 cycles Min.
2.PCB Retention pre-solder : 1 LB MIN

ENVIRONMENTAL

1.Storage :-40°C~+80°C
2.Operation:-40°C~+70°C

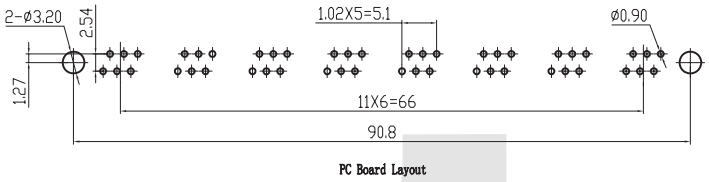

PC Board Layout

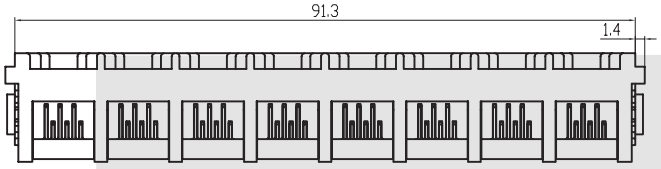

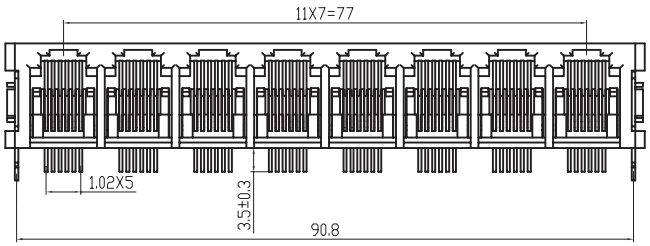

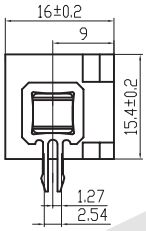

ORDER INFORMATION

KLS12-303 -6P6C- 1x8-1-1-XX-X-X

Part Number	Point NO.	Ports	Iron Peg	Angle	Gold Thickness	Color	Plastic
	6P6C Point 6P4C Point	1x1-1 Ports 1x2-2 Ports 1x3-3 Ports 1x4-4 Ports 1x5-5 Ports 1x6-6 Ports 1x7-7 Ports 1x8-8 Ports	0-Without Iron Peg 1-With Iron Peg	1-90 Angle 2-180 Angle	01-Fu" 02-3u" 03-6u" 04-15u" 05-30u" 06-50u	B-Black G-Gray W-White I-Iv	1-Nylon 2-PBT 3-ABS

PCB Modular Jack Series

KLS12-303-6P PCB Modular Jack 52 Series 1x1 Ports



MATERIAL

1.Housing Material: Glass Filled Polyester UL94V-0 PBT, NYLON
2.Housing Color: Black, Gray, Ivory, White or others
3.Contact Material: Phosphor Bronze Φ0.46mm
4.Plating: Gold plating over nickel. Gold plating thickness
1.5u "/ 3u" / 6u "/ 15u" / 30u "/ 50u"

ELECTRICAL

1.Current Rating: 1.5 Amp
2.Voltage Rating: 125VAC
3.Contact Resistance: 30 MΩ Max.
4.Insulation Resistance: 500 MΩ Min. @ 500VDC
5.Withstanding Voltage: 1000VAC RMS 50Hz 1 minute

MECHANICAL

1.Durability : 750 cycles Min.
2.PCB Retention pre-solder : 1 LB MIN

ENVIRONMENTAL

1.Storage :-40°C~+80°C
2.Operation:-40°C~+70°C

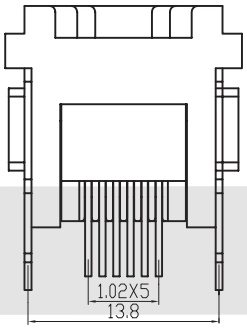

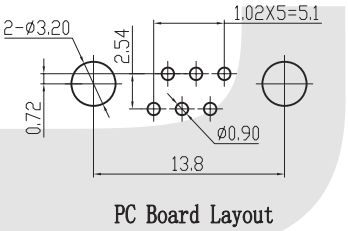

PC Board Layout

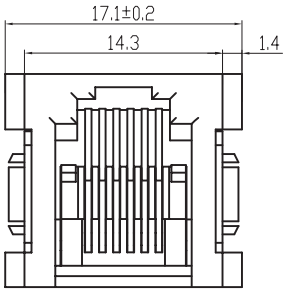

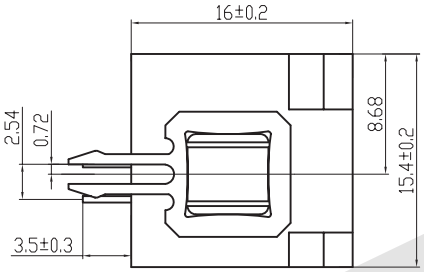

ORDER INFORMATION

KLS12-303 -6P6C- 1x1-1-2-XX-X-X

Part Number	Point NO.	Ports	Iron Peg	Angle	Gold Thickness	Color	Plastic
	6P6C Point 6P4C Point	1x1-1 Ports 1x2-2 Ports 1x3-3 Ports 1x4-4 Ports 1x5-5 Ports 1x6-6 Ports 1x7-7 Ports 1x8-8 Ports	0-Without Iron Peg 1-With Iron Peg	1-90 Angle 2-180 Angle	01-Fu" 02-3u" 03-6u" 04-15u" 05-30u" 06-50u	B-Black G-Gray W-White I-Iv	1-Nylon 2-PBT 3-ABS

PCB Modular Jack Series

KLS12-303-6P PCB Modular Jack 52 Series 1x2 Ports



MATERIAL

1.Housing Material: Glass Filled Polyester UL94V-0 PBT, NYLON
2.Housing Color: Black, Gray, Ivory, White or others
3.Contact Material: Phosphor Bronze Φ0.46mm
4.Plating: Gold plating over nickel. Gold plating thickness
1.5u "/ 3u" / 6u "/ 15u" / 30u "/ 50u"

ELECTRICAL

1.Current Rating: 1.5 Amp
2.Voltage Rating: 125VAC
3.Contact Resistance: 30 MΩ Max.
4.Insulation Resistance: 500 MΩ Min. @ 500VDC
5.Withstanding Voltage: 1000VAC RMS 50Hz 1 minute

MECHANICAL

1.Durability : 750 cycles Min.
2.PCB Retention pre-solder : 1 LB MIN

ENVIRONMENTAL

1.Storage :-40°C~+80°C
2.Operation:-40°C~+70°C

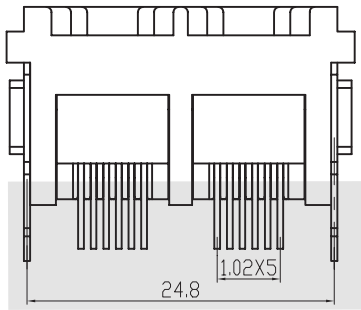

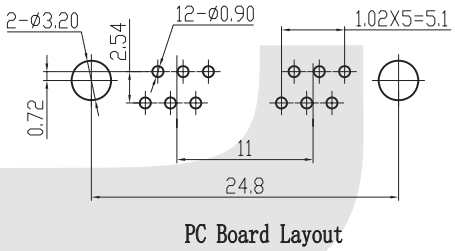

PC Board Layout

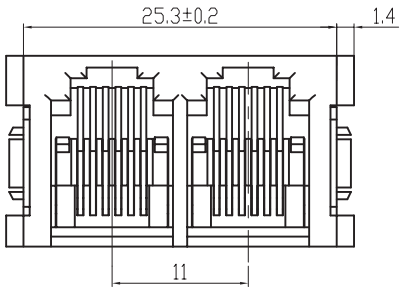

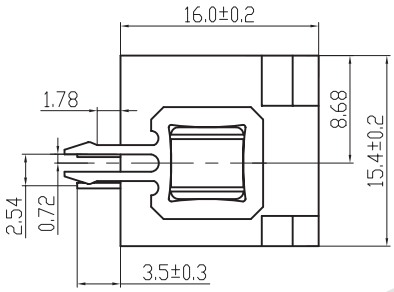

ORDER INFORMATION

KLS12-303 -6P6C- 1x2-1-2-XX-X-X

Part Number	Point NO.	Ports	Iron Peg	Angle	Gold Thickness	Color	Plastic
	6P6C Point 6P4C Point	1x1-1 Ports 1x2-2 Ports 1x3-3 Ports 1x4-4 Ports 1x5-5 Ports 1x6-6 Ports 1x7-7 Ports 1x8-8 Ports	0-Without Iron Peg 1-With Iron Peg	1-90 Angle 2-180 Angle	01-Fu" 02-3u" 03-6u" 04-15u" 05-30u" 06-50u	B-Black G-Gray W-White I-Iv	1-Nylon 2-PBT 3-ABS

PCB Modular Jack Series

KLS12-303-6P PCB Modular Jack 52 Series 1x3 Ports



MATERIAL

1.Housing Material: Glass Filled Polyester UL94V-0 PBT, NYLON
2.Housing Color: Black, Gray, Ivory, White or others
3.Contact Material: Phosphor Bronze Φ0.46mm
4.Plating: Gold plating over nickel. Gold plating thickness
1.5u "/ 3u" / 6u "/ 15u" / 30u "/ 50u"

ELECTRICAL

1.Current Rating: 1.5 Amp
2.Voltage Rating: 125VAC
3.Contact Resistance: 30 MΩ Max.
4.Insulation Resistance: 500 MΩ Min. @ 500VDC
5.Withstanding Voltage: 1000VAC RMS 50Hz 1 minute

MECHANICAL

1.Durability : 750 cycles Min.
2.PCB Retention pre-solder : 1 LB MIN

ENVIRONMENTAL

1.Storage :-40°C~+80°C
2.Operation:-40°C~+70°C

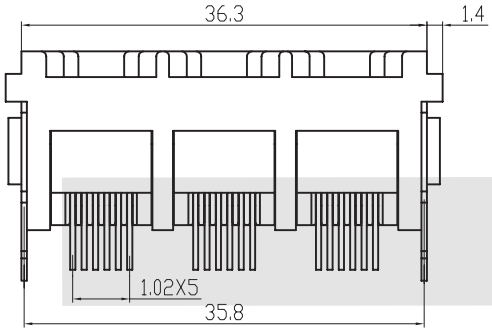

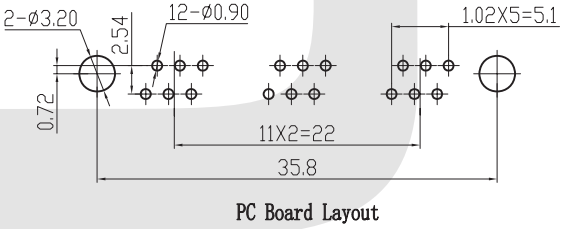

PC Board Layout

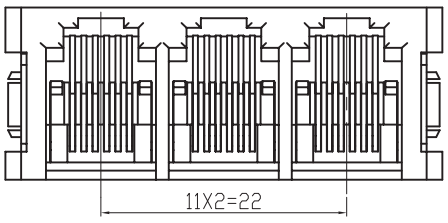

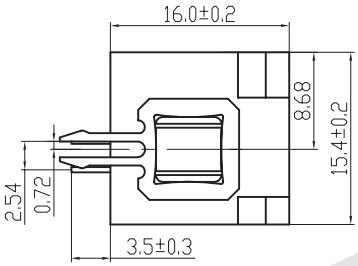

ORDER INFORMATION

KLS12-303 -6P6C- 1x3-1-2-XX-X-X

Part Number	Point NO.	Ports	Iron Peg	Angle	Gold Thickness	Color	Plastic
	6P6C Point 6P4C Point	1x1-1 Ports 1x2-2 Ports 1x3-3 Ports 1x4-4 Ports 1x5-5 Ports 1x6-6 Ports 1x7-7 Ports 1x8-8 Ports	0-Without Iron Peg 1-With Iron Peg	1-90 Angle 2-180 Angle	01-Fu" 02-3u" 03-6u" 04-15u" 05-30u" 06-50u	B-Black G-Gray W-White I-Iv	1-Nylon 2-PBT 3-ABS

PCB Modular Jack Series

KLS12-303-6P PCB Modular Jack 52 Series 1x4 Ports



MATERIAL

1.Housing Material: Glass Filled Polyester UL94V-0 PBT, NYLON
2.Housing Color: Black, Gray, Ivory, White or others
3.Contact Material: Phosphor Bronze Φ0.46mm
4.Plating: Gold plating over nickel. Gold plating thickness
1.5u "/ 3u" / 6u "/ 15u" / 30u "/ 50u"

ELECTRICAL

1.Current Rating: 1.5 Amp
2.Voltage Rating: 125VAC
3.Contact Resistance: 30 MΩ Max.
4.Insulation Resistance: 500 MΩ Min. @ 500VDC
5.Withstanding Voltage: 1000VAC RMS 50Hz 1 minute

MECHANICAL

1.Durability : 750 cycles Min.
2.PCB Retention pre-solder : 1 LB MIN

ENVIRONMENTAL

1.Storage :-40°C~+80°C
2.Operation:-40°C~+70°C

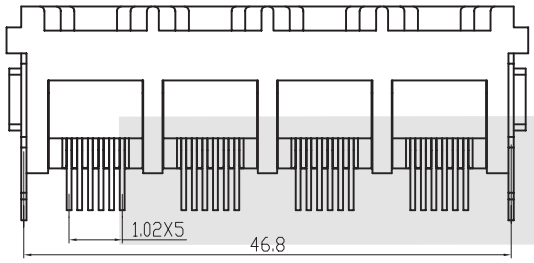

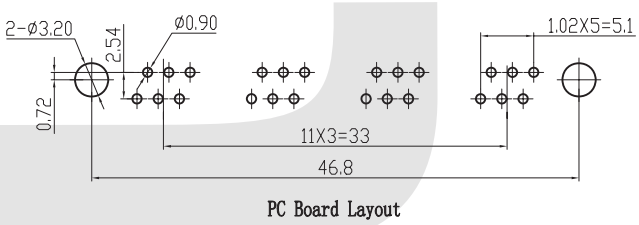

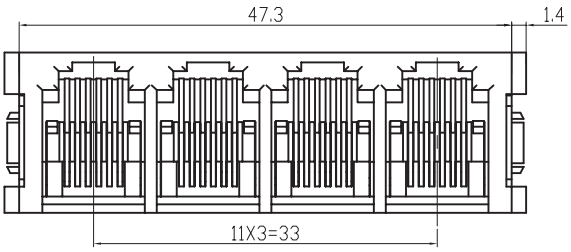

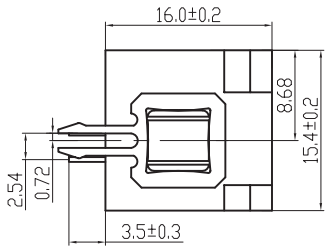

ORDER INFORMATION

KLS12-303 -6P6C- 1x4-1-2-XX-X-X

Part Number	Point NO.	Ports	Iron Peg	Angle	Gold Thickness	Color	Plastic
	6P6C Point 6P4C Point	1x1-1 Ports 1x2-2 Ports 1x3-3 Ports 1x4-4 Ports 1x5-5 Ports 1x6-6 Ports 1x7-7 Ports 1x8-8 Ports	0-Without Iron Peg 1-With Iron Peg	1-90 Angle 2-180 Angle	01-Fu" 02-3u" 03-6u" 04-15u" 05-30u" 06-50u	B-Black G-Gray W-White I-Iv	1-Nylon 2-PBT 3-ABS

PCB Modular Jack Series

KLS12-303-6P PCB Modular Jack 52 Series 1x5 Ports



MATERIAL

1.Housing Material: Glass Filled Polyester UL94V-0 PBT, NYLON
2.Housing Color: Black, Gray, Ivory, White or others
3.Contact Material: Phosphor Bronze Φ0.46mm
4.Plating: Gold plating over nickel. Gold plating thickness
1.5u "/ 3u" / 6u "/ 15u" / 30u "/ 50u"

ELECTRICAL

1.Current Rating: 1.5 Amp
2.Voltage Rating: 125VAC
3.Contact Resistance: 30 MΩ Max.
4.Insulation Resistance: 500 MΩ Min. @ 500VDC
5.Withstanding Voltage: 1000VAC RMS 50Hz 1 minute

MECHANICAL

1.Durability : 750 cycles Min.
2.PCB Retention pre-solder : 1 LB MIN

ENVIRONMENTAL

1.Storage :-40°C~+80°C
2.Operation:-40°C~+70°C

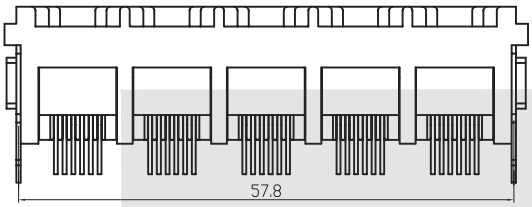

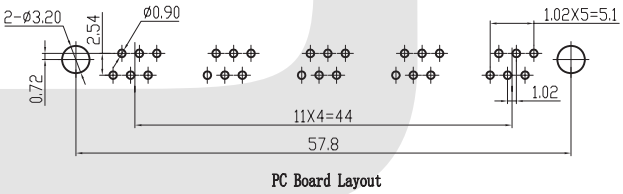

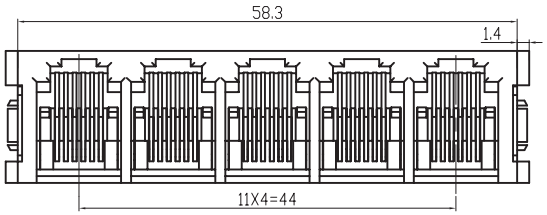

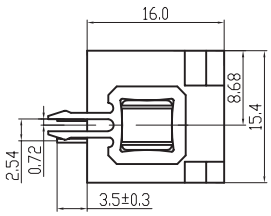

ORDER INFORMATION

KLS12-303 -6P6C- 1x5-1-2-XX-X-X

Part Number	Point NO.	Ports	Iron Peg	Angle	Gold Thickness	Color	Plastic
	6P6C Point 6P4C Point	1x1-1 Ports 1x2-2 Ports 1x3-3 Ports 1x4-4 Ports 1x5-5 Ports 1x6-6 Ports 1x7-7 Ports 1x8-8 Ports	0-Without Iron Peg 1-With Iron Peg	1-90 Angle 2-180 Angle	01-Fu" 02-3u" 03-6u" 04-15u" 05-30u" 06-50u	B-Black G-Gray W-White I-Iv	1-Nylon 2-PBT 3-ABS

PCB Modular Jack Series

KLS12-303-6P PCB Modular Jack 52 Series 1x6 Ports



MATERIAL

1.Housing Material: Glass Filled Polyester UL94V-0 PBT, NYLON
2.Housing Color: Black, Gray, Ivory, White or others
3.Contact Material: Phosphor Bronze Φ0.46mm
4.Plating: Gold plating over nickel. Gold plating thickness
1.5u "/ 3u" / 6u "/ 15u" / 30u "/ 50u"

ELECTRICAL

1.Current Rating: 1.5 Amp
2.Voltage Rating: 125VAC
3.Contact Resistance: 30 MΩ Max.
4.Insulation Resistance: 500 MΩ Min. @ 500VDC
5.Withstanding Voltage: 1000VAC RMS 50Hz 1 minute

MECHANICAL

1.Durability : 750 cycles Min.
2.PCB Retention pre-solder : 1 LB MIN

ENVIRONMENTAL

1.Storage :-40°C~+80°C
2.Operation:-40°C~+70°C

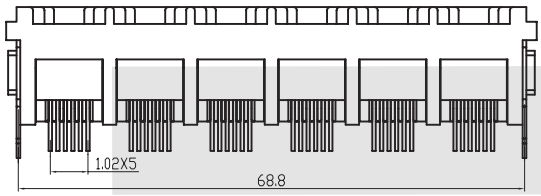

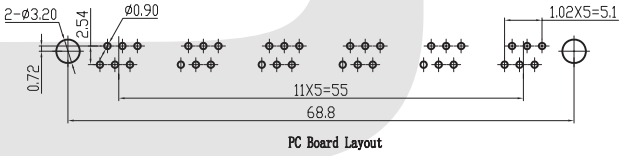

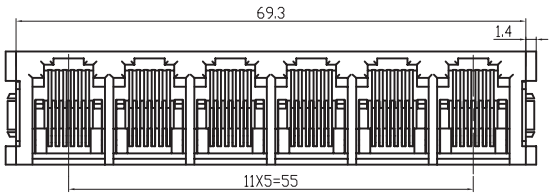

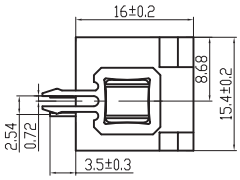

ORDER INFORMATION

KLS12-303 -6P6C- 1x6-1-2-XX-X-X

Part Number	Point NO.	Ports	Iron Peg	Angle	Gold Thickness	Color	Plastic
	6P6C Point 6P4C Point	1x1-1 Ports 1x2-2 Ports 1x3-3 Ports 1x4-4 Ports 1x5-5 Ports 1x6-6 Ports 1x7-7 Ports 1x8-8 Ports	0-Without Iron Peg 1-With Iron Peg	1-90 Angle 2-180 Angle	01-Fu" 02-3u" 03-6u" 04-15u" 05-30u" 06-50u	B-Black G-Gray W-White I-Iv	1-Nylon 2-PBT 3-ABS

PCB Modular Jack Series

KLS12-303-6P PCB Modular Jack 52 Series 1x7 Ports



MATERIAL
1.Housing Material: Glass Filled Polyester UL94V-0 PBT, NYLON
2.Housing Color: Black, Gray, Ivory, White or others
3.Contact Material: Phosphor Bronze Φ0.46mm
4.Plating: Gold plating over nickel. Gold plating thickness
1.5u "/ 3u" / 6u "/ 15u" / 30u "/ 50u"

ELECTRICAL
1.Current Rating: 1.5 Amp
2.Voltage Rating: 125VAC
3.Contact Resistance: 30 MΩ Max.
4.Insulation Resistance: 500 MΩ Min. @ 500VDC
5.Withstanding Voltage: 1000VAC RMS 50Hz 1 minute

MECHANICAL
1.Durability : 750 cycles Min.
2.PCB Retention pre-solder : 1 LB MIN

ENVIRONMENTAL
1.Storage :-40°C~+80°C
2.Operation:-40°C~+70°C

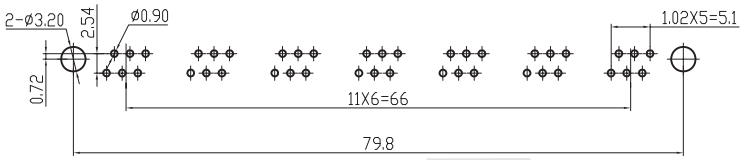

PC Board Layout

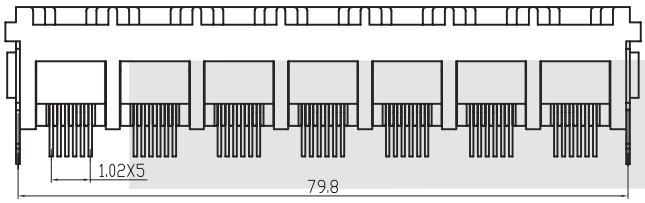

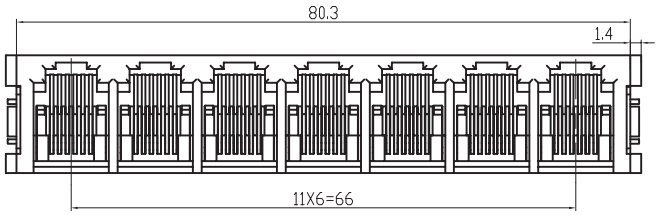

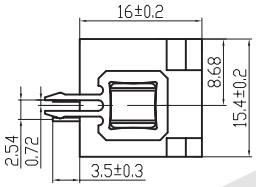

ORDER INFORMATION

KLS12-303 -6P6C- 1x7-1-2-XX-X-X

Part Number	Point NO.	Ports	Iron Peg	Angle	Gold Thickness	Color	Plastic
	6P6C Point 6P4C Point	1x1-1 Ports 1x2-2 Ports 1x3-3 Ports 1x4-4 Ports 1x5-5 Ports 1x6-6 Ports 1x7-7 Ports 1x8-8 Ports	0-Without Iron Peg 1-With Iron Peg	1-90 Angle 2-180 Angle	01-Fu" 02-3u" 03-6u" 04-15u" 05-30u" 06-50u	B-Black G-Gray W-White I-Iv	1-Nylon 2-PBT 3-ABS

PCB Modular Jack Series

KLS12-303-6P PCB Modular Jack 52 Series 1x8 Ports

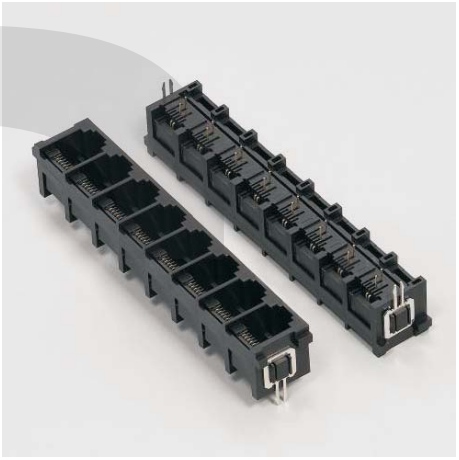

MATERIAL

1.Housing Material: Glass Filled Polyester UL94V-0 PBT, NYLON
2.Housing Color: Black, Gray, Ivory, White or others
3.Contact Material: Phosphor Bronze Φ0.46mm
4.Plating: Gold plating over nickel. Gold plating thickness
1.5u "/ 3u" / 6u "/ 15u" / 30u "/ 50u"

ELECTRICAL

1.Current Rating: 1.5 Amp
2.Voltage Rating: 125VAC
3.Contact Resistance: 30 MΩ Max.
4.Insulation Resistance: 500 MΩ Min. @ 500VDC
5.Withstanding Voltage: 1000VAC RMS 50Hz 1 minute

MECHANICAL

1.Durability : 750 cycles Min.
2.PCB Retention pre-solder : 1 LB MIN

ENVIRONMENTAL

1.Storage :-40°C~+80°C
2.Operation:-40°C~+70°C

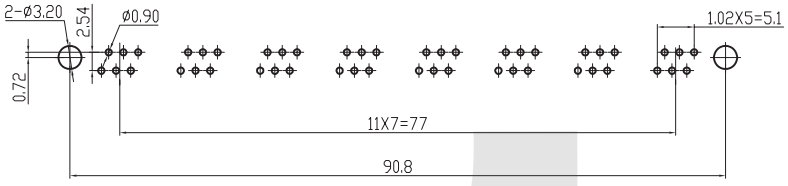

PC Board Layout

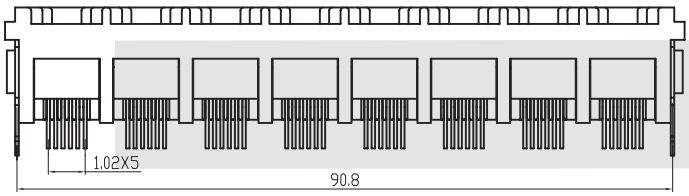

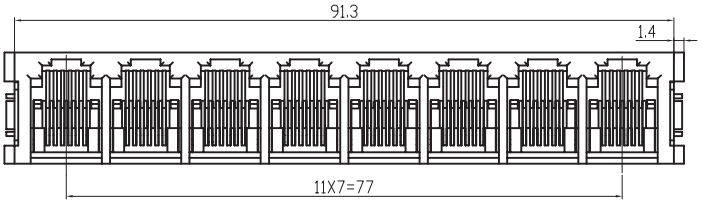

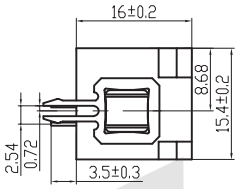

ORDER INFORMATION

KLS12-303 -6P6C- 1x8-1-2-XX-X-X

Part Number	Point NO.	Ports	Iron Peg	Angle	Gold Thickness	Color	Plastic
	6P6C Point 6P4C Point	1x1-1 Ports 1x2-2 Ports 1x3-3 Ports 1x4-4 Ports 1x5-5 Ports 1x6-6 Ports 1x7-7 Ports 1x8-8 Ports	0-Without Iron Peg 1-With Iron Peg	1-90 Angle 2-180 Angle	01-Fu" 02-3u" 03-6u" 04-15u" 05-30u" 06-50u	B-Black G-Gray W-White I-Iv	1-Nylon 2-PBT 3-ABS

PCB Modular Jack Series

KLS12-303-8P PCB Modular Jack 52 Series 1x1 Ports



MATERIAL

1.Housing Material: Glass Filled Polyester UL94V-0 PBT, NYLON
2.Housing Color: Black, Gray, Ivory, White or others
3.Contact Material: Phosphor Bronze Φ0.46mm
4.Plating: Gold plating over nickel. Gold plating thickness
1.5u "/ 3u" / 6u "/ 15u" / 30u "/ 50u"

ELECTRICAL

1.Current Rating: 1.5 Amp
2.Voltage Rating: 125VAC
3.Contact Resistance: 30 MΩ Max.
4.Insulation Resistance: 500 MΩ Min. @ 500VDC
5.Withstanding Voltage: 1000VAC RMS 50Hz 1 minute

MECHANICAL

1.Durability : 750 cycles Min.
2.PCB Retention pre-solder : 1 LB MIN

ENVIRONMENTAL

1.Storage :-40°C~+80°C
2.Operation:-40°C~+70°C

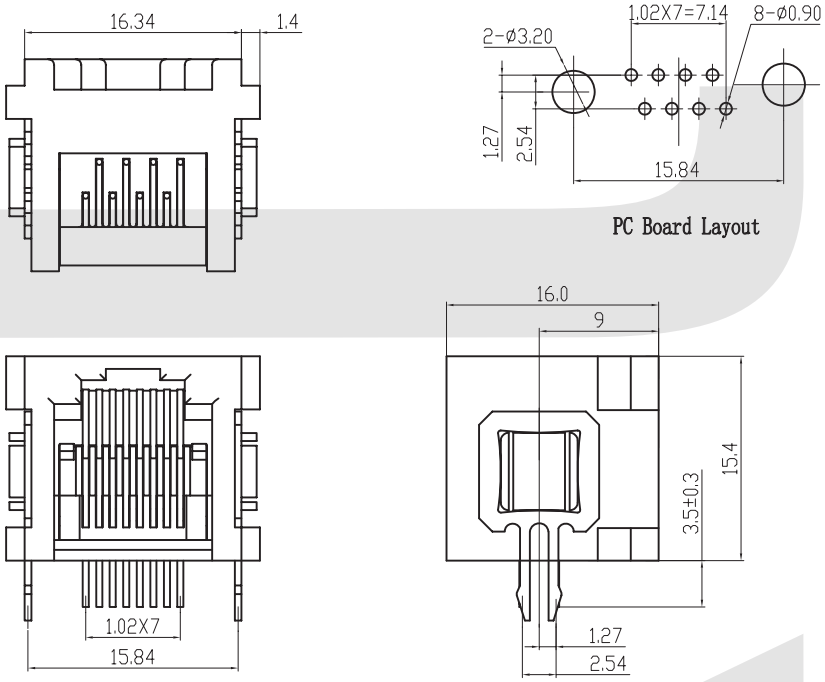

ORDER INFORMATION

KLS12-303 -8P8C- 1x1-1-1-XX-X-X

Part Number	Point NO.	Ports	Iron Peg	Angle	Gold Thickness	Color	Plastic
	8P8C Point	1x1-1 Ports 1x2-2 Ports 1x3-3 Ports 1x4-4 Ports 1x5-5 Ports 1x6-6 Ports 1x7-7 Ports 1x8-8 Ports	0-Without Iron Peg 1-With Iron Peg	1-90 Angle 2-180 Angle	01-Fu" 02-3u" 03-6u" 04-15u" 05-30u" 06-50u	B-Black G-Gray W-White I-Iv	1-Nylon 2-PBT 3-ABS

PCB Modular Jack Series

KLS12-303-8P PCB Modular Jack 52 Series 1x2 Ports



MATERIAL

1.Housing Material: Glass Filled Polyester UL94V-0 PBT, NYLON
2.Housing Color: Black, Gray, Ivory, White or others
3.Contact Material: Phosphor Bronze Φ0.46mm
4.Plating: Gold plating over nickel. Gold plating thickness
1.5u "/ 3u" / 6u "/ 15u" / 30u "/ 50u"

ELECTRICAL

1.Current Rating: 1.5 Amp
2.Voltage Rating: 125VAC
3.Contact Resistance: 30 MΩ Max.
4.Insulation Resistance: 500 MΩ Min. @ 500VDC
5.Withstanding Voltage: 1000VAC RMS 50Hz 1 minute

MECHANICAL

1.Durability : 750 cycles Min.
2.PCB Retention pre-solder : 1 LB MIN

ENVIRONMENTAL

1.Storage :-40°C~+80°C
2.Operation:-40°C~+70°C

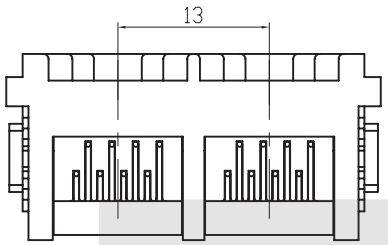

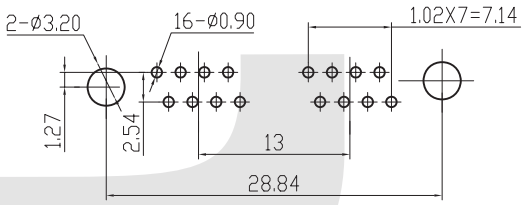

PC Board Layout

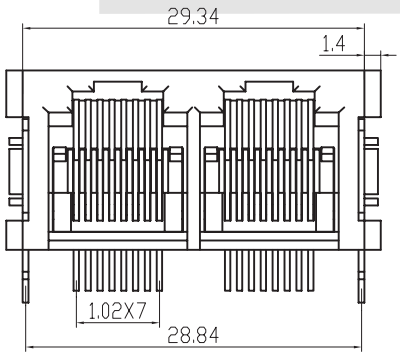

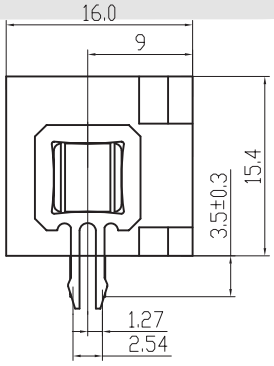

ORDER INFORMATION

KLS12-303 -8P8C- 1x2-1-1-XX-X-X

Part Number	Point NO.	Ports	Iron Peg	Angle	Gold Thickness	Color	Plastic
	8P8C Point	1x1-1 Ports 1x2-2 Ports 1x3-3 Ports 1x4-4 Ports 1x5-5 Ports 1x6-6 Ports 1x7-7 Ports 1x8-8 Ports	0-Without Iron Peg 1-With Iron Peg	1-90 Angle 2-180 Angle	01-Fu" 02-3u" 03-6u" 04-15u" 05-30u" 06-50u	B-Black G-Gray W-White I-Iv	1-Nylon 2-PBT 3-ABS

PCB Modular Jack Series

KLS12-303-8P PCB Modular Jack 52 Series 1x3 Ports



MATERIAL

1.Housing Material: Glass Filled Polyester UL94V-0 PBT, NYLON
2.Housing Color: Black, Gray, Ivory, White or others
3.Contact Material: Phosphor Bronze Φ0.46mm
4.Plating: Gold plating over nickel. Gold plating thickness
1.5u "/ 3u" / 6u "/ 15u" / 30u "/ 50u"

ELECTRICAL

1.Current Rating: 1.5 Amp
2.Voltage Rating: 125VAC
3.Contact Resistance: 30 MΩ Max.
4.Insulation Resistance: 500 MΩ Min. @ 500VDC
5.Withstanding Voltage: 1000VAC RMS 50Hz 1 minute

MECHANICAL

1.Durability : 750 cycles Min.
2.PCB Retention pre-solder : 1 LB MIN

ENVIRONMENTAL

1.Storage :-40°C~+80°C
2.Operation:-40°C~+70°C

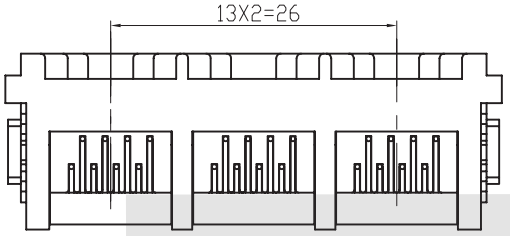

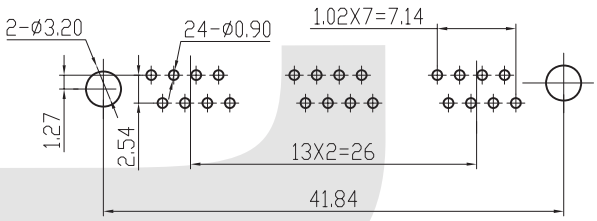

PC Board Layout

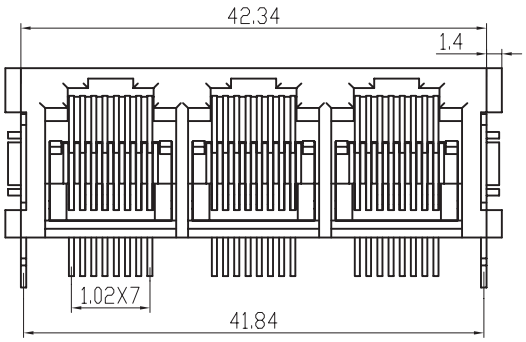

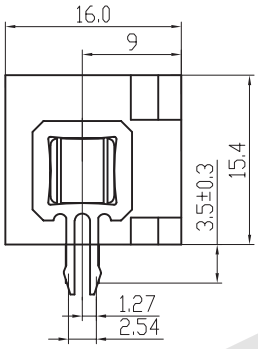

ORDER INFORMATION

KLS12-303 -8P8C- 1x3-1-1-XX-X-X

Part Number	Point NO.	Ports	Iron Peg	Angle	Gold Thickness	Color	Plastic
	8P8C Point	1x1-1 Ports 1x2-2 Ports 1x3-3 Ports 1x4-4 Ports 1x5-5 Ports 1x6-6 Ports 1x7-7 Ports 1x8-8 Ports	0-Without Iron Peg 1-With Iron Peg	1-90 Angle 2-180 Angle	01-Fu" 02-3u" 03-6u" 04-15u" 05-30u" 06-50u	B-Black G-Gray W-White I-Iv	1-Nylon 2-PBT 3-ABS

PCB Modular Jack Series

KLS12-303-8P PCB Modular Jack 52 Series 1x4 Ports



MATERIAL
1.Housing Material: Glass Filled Polyester UL94V-0 PBT, NYLON
2.Housing Color: Black, Gray, Ivory, White or others
3.Contact Material: Phosphor Bronze Φ0.46mm
4.Plating: Gold plating over nickel. Gold plating thickness
1.5u "/ 3u" / 6u "/ 15u" / 30u "/ 50u"

ELECTRICAL
1.Current Rating: 1.5 Amp
2.Voltage Rating: 125VAC
3.Contact Resistance: 30 MΩ Max.
4.Insulation Resistance: 500 MΩ Min. @ 500VDC
5.Withstanding Voltage: 1000VAC RMS 50Hz 1 minute

MECHANICAL
1.Durability : 750 cycles Min.
2.PCB Retention pre-solder : 1 LB MIN

ENVIRONMENTAL
1.Storage :-40ºC~+80ºC
2.Operation:-40ºC~+70ºC

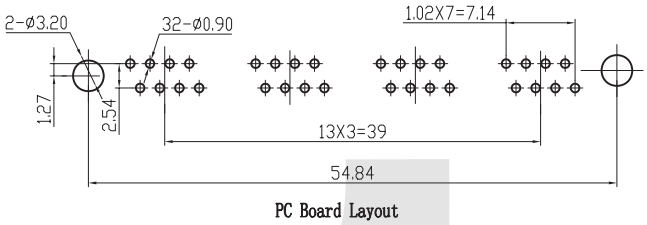

PC Board Layout

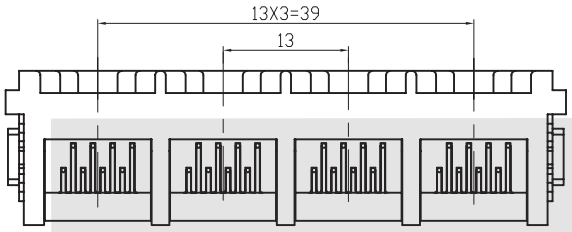

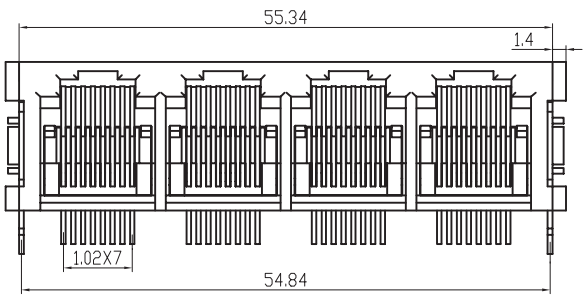

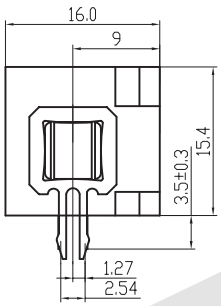

ORDER INFORMATION

KLS12-303 -8P8C- 1x4-1-1-XX-X-X

Part Number	Point NO.	Ports	Iron Peg	Angle	Gold Thickness	Color	Plastic
	8P8C Point	1x1-1 Ports 1x2-2 Ports 1x3-3 Ports 1x4-4 Ports 1x5-5 Ports 1x6-6 Ports 1x7-7 Ports 1x8-8 Ports	0-Without Iron Peg 1-With Iron Peg	1-90 Angle 2-180 Angle	01-Fu" 02-3u" 03-6u" 04-15u" 05-30u" 06-50u	B-Black G-Gray W-White I-Iv	1-Nylon 2-PBT 3-ABS

PCB Modular Jack Series

KLS12-303-8P PCB Modular Jack 52 Series 1x5 Ports



MATERIAL

1.Housing Material: Glass Filled Polyester UL94V-0 PBT, NYLON
2.Housing Color: Black, Gray, Ivory, White or others
3.Contact Material: Phosphor Bronze Φ0.46mm
4.Plating: Gold plating over nickel. Gold plating thickness
1.5u "/ 3u" / 6u "/ 15u" / 30u "/ 50u"

ELECTRICAL

1.Current Rating: 1.5 Amp
2.Voltage Rating: 125VAC
3.Contact Resistance: 30 MΩ Max.
4.Insulation Resistance: 500 MΩ Min. @ 500VDC
5.Withstanding Voltage: 1000VAC RMS 50Hz 1 minute

MECHANICAL

1.Durability : 750 cycles Min.
2.PCB Retention pre-solder : 1 LB MIN

ENVIRONMENTAL

1.Storage :-40ºC~+80ºC
2.Operation:-40ºC~+70ºC

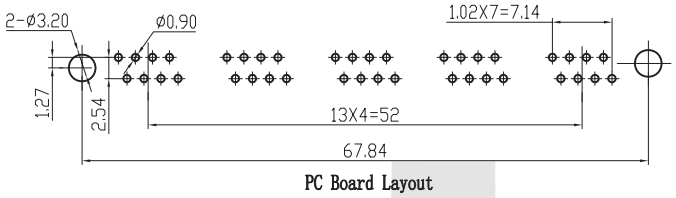

PC Board Layout

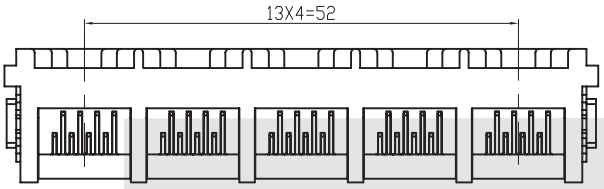

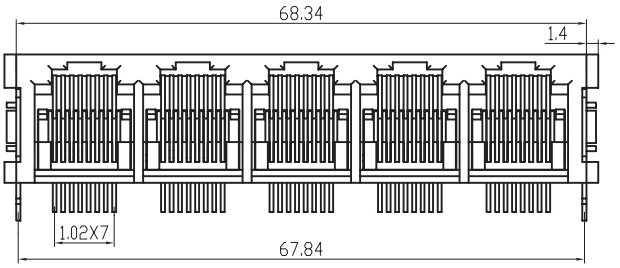

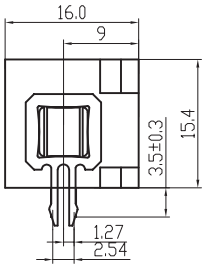

ORDER INFORMATION

KLS12-303 -8P8C- 1x5-1-1-XX-X-X

Part Number	Point NO.	Ports	Iron Peg	Angle	Gold Thickness	Color	Plastic
	8P8C Point	1x1-1 Ports 1x2-2 Ports 1x3-3 Ports 1x4-4 Ports 1x5-5 Ports 1x6-6 Ports 1x7-7 Ports 1x8-8 Ports	0-Without Iron Peg 1-With Iron Peg	1-90 Angle 2-180 Angle	01-Fu" 02-3u" 03-6u" 04-15u" 05-30u" 06-50u	B-Black G-Gray W-White I-Iv	1-Nylon 2-PBT 3-ABS

PCB Modular Jack Series

KLS12-303-8P PCB Modular Jack 52 Series 1x6 Ports



MATERIAL

1.Housing Material: Glass Filled Polyester UL94V-0 PBT, NYLON
2.Housing Color: Black, Gray, Ivory, White or others
3.Contact Material: Phosphor Bronze Φ0.46mm
4.Plating: Gold plating over nickel. Gold plating thickness
1.5u "/ 3u" / 6u "/ 15u" / 30u "/ 50u"

ELECTRICAL

1.Current Rating: 1.5 Amp
2.Voltage Rating: 125VAC
3.Contact Resistance: 30 MΩ Max.
4.Insulation Resistance: 500 MΩ Min. @ 500VDC
5.Withstanding Voltage: 1000VAC RMS 50Hz 1 minute

MECHANICAL

1.Durability : 750 cycles Min.
2.PCB Retention pre-solder : 1 LB MIN

ENVIRONMENTAL

1.Storage :-40°C~+80°C
2.Operation:-40°C~+70°C

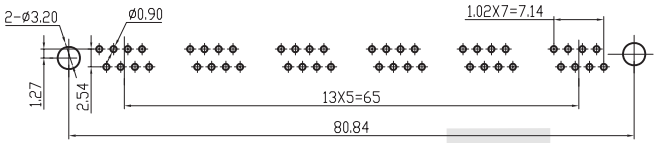

PC Board Layout

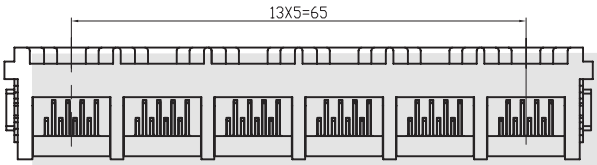

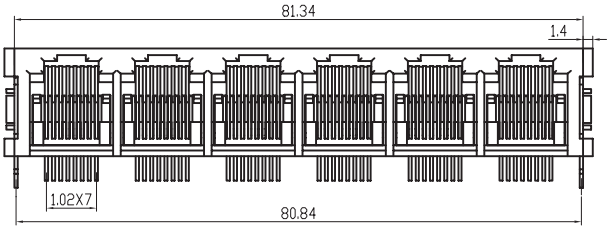

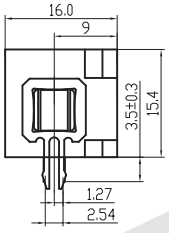

ORDER INFORMATION

KLS12-303 -8P8C- 1x6-1-1-XX-X-X

Part Number	Point NO.	Ports	Iron Peg	Angle	Gold Thickness	Color	Plastic
	8P8C Point	1x1-1 Ports 1x2-2 Ports 1x3-3 Ports 1x4-4 Ports 1x5-5 Ports 1x6-6 Ports 1x7-7 Ports 1x8-8 Ports	0-Without Iron Peg 1-With Iron Peg	1-90 Angle 2-180 Angle	01-Fu" 02-3u" 03-6u" 04-15u" 05-30u" 06-50u	B-Black G-Gray W-White I-Iv	1-Nylon 2-PBT 3-ABS

PCB Modular Jack Series

KLS12-303-8P PCB Modular Jack 52 Series 1x7 Ports



MATERIAL

1.Housing Material: Glass Filled Polyester UL94V-0 PBT, NYLON
2.Housing Color: Black, Gray, Ivory, White or others
3.Contact Material: Phosphor Bronze Φ0.46mm
4.Plating: Gold plating over nickel. Gold plating thickness
1.5u "/ 3u" / 6u "/ 15u" / 30u "/ 50u"

ELECTRICAL

1.Current Rating: 1.5 Amp
2.Voltage Rating: 125VAC
3.Contact Resistance: 30 MΩ Max.
4.Insulation Resistance: 500 MΩ Min. @ 500VDC
5.Withstanding Voltage: 1000VAC RMS 50Hz 1 minute

MECHANICAL

1.Durability : 750 cycles Min.
2.PCB Retention pre-solder : 1 LB MIN

ENVIRONMENTAL

1.Storage :-40°C~+80°C
2.Operation:-40°C~+70°C

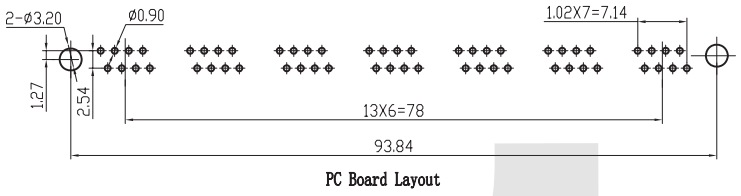

PC Board Layout

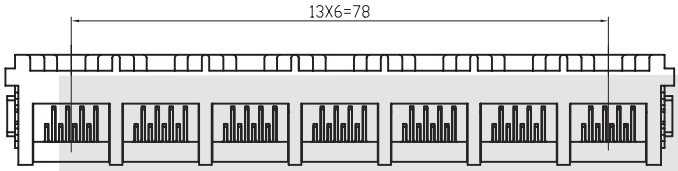

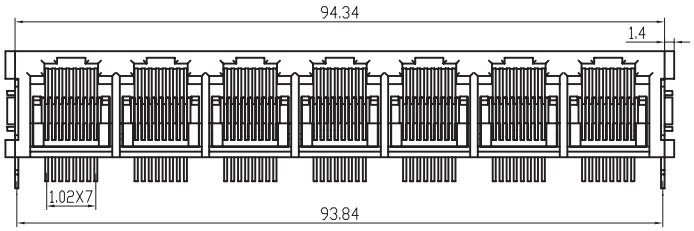

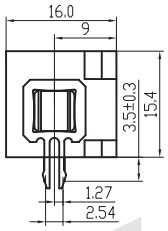

ORDER INFORMATION

KLS12-303 -8P8C- 1x7-1-1-XX-X-X

Part Number	Point NO.	Ports	Iron Peg	Angle	Gold Thickness	Color	Plastic
	8P8C Point	1x1-1 Ports 1x2-2 Ports 1x3-3 Ports 1x4-4 Ports 1x5-5 Ports 1x6-6 Ports 1x7-7 Ports 1x8-8 Ports	0-Without Iron Peg 1-With Iron Peg	1-90 Angle 2-180 Angle	01-Fu" 02-3u" 03-6u" 04-15u" 05-30u" 06-50u	B-Black G-Gray W-White I-Iv	1-Nylon 2-PBT 3-ABS

PCB Modular Jack Series

KLS12-303-8P PCB Modular Jack 52 Series 1x8 Ports



MATERIAL

1.Housing Material: Glass Filled Polyester UL94V-0 PBT, NYLON
2.Housing Color: Black, Gray, Ivory, White or others
3.Contact Material: Phosphor Bronze Φ0.46mm
4.Plating: Gold plating over nickel. Gold plating thickness
1.5u "/ 3u" / 6u "/ 15u" / 30u "/ 50u"

ELECTRICAL

1.Current Rating: 1.5 Amp
2.Voltage Rating: 125VAC
3.Contact Resistance: 30 MΩ Max.
4.Insulation Resistance: 500 MΩ Min. @ 500VDC
5.Withstanding Voltage: 1000VAC RMS 50Hz 1 minute

MECHANICAL

1.Durability : 750 cycles Min.
2.PCB Retention pre-solder : 1 LB MIN

ENVIRONMENTAL

1.Storage :-40°C~+80°C
2.Operation:-40°C~+70°C

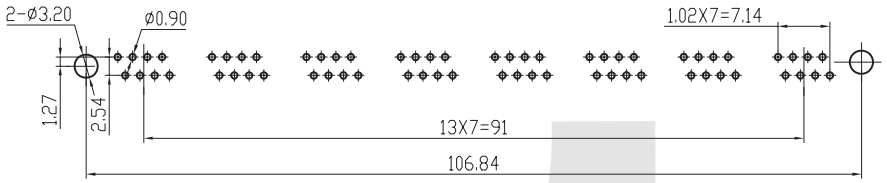

PC Board Layout

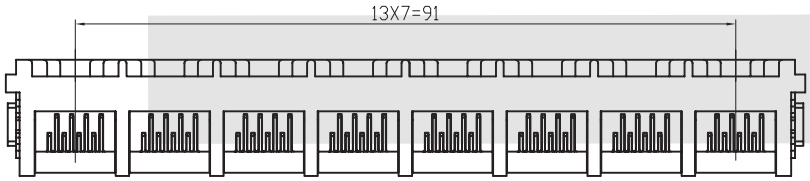

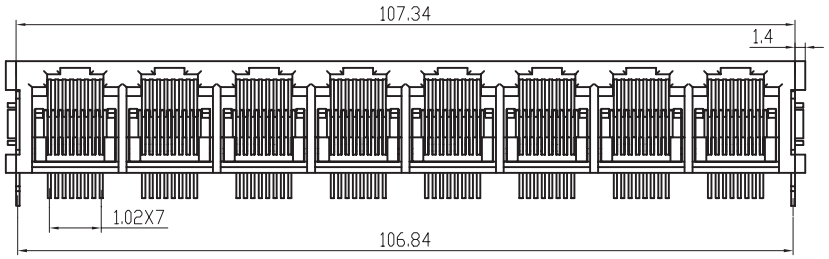

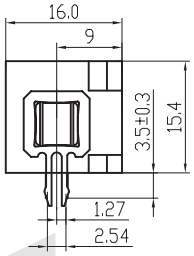

ORDER INFORMATION

KLS12-303 -8P8C- 1x8-1-1-XX-X-X

Part Number	Point NO.	Ports	Iron Peg	Angle	Gold Thickness	Color	Plastic
	8P8C Point	1x1-1 Ports 1x2-2 Ports 1x3-3 Ports 1x4-4 Ports 1x5-5 Ports 1x6-6 Ports 1x7-7 Ports 1x8-8 Ports	0-Without Iron Peg 1-With Iron Peg	1-90 Angle 2-180 Angle	01-Fu" 02-3u" 03-6u" 04-15u" 05-30u" 06-50u	B-Black G-Gray W-White I-Iv	1-Nylon 2-PBT 3-ABS

PCB Modular Jack Series

KLS12-303-8P PCB Modular Jack 52 Series 1x1 Ports



MATERIAL

1.Housing Material: Glass Filled Polyester UL94V-0 PBT, NYLON
2.Housing Color: Black, Gray, Ivory, White or others
3.Contact Material: Phosphor Bronze Φ0.46mm
4.Plating: Gold plating over nickel. Gold plating thickness
1.5u "/ 3u" / 6u "/ 15u" / 30u "/ 50u"

ELECTRICAL

1.Current Rating: 1.5 Amp
2.Voltage Rating: 125VAC
3.Contact Resistance: 30 MΩ Max.
4.Insulation Resistance: 500 MΩ Min. @ 500VDC
5.Withstanding Voltage: 1000VAC RMS 50Hz 1 minute

MECHANICAL

1.Durability : 750 cycles Min.
2.PCB Retention pre-solder : 1 LB MIN

ENVIRONMENTAL

1.Storage :-40°C~+80°C
2.Operation:-40°C~+70°C

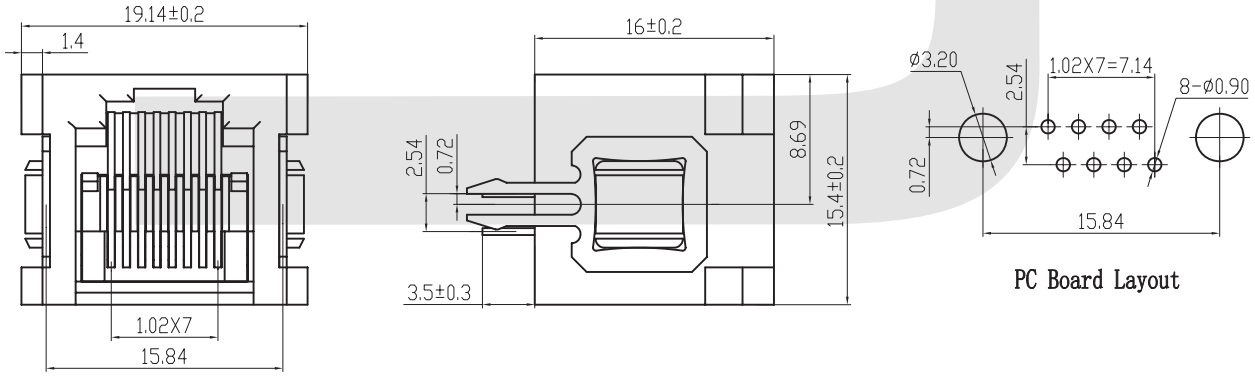

ORDER INFORMATION

KLS12-303 -8P8C- 1x1-1-2-XX-X-X

Part Number	Point NO.	Ports	Iron Peg	Angle	Gold Thickness	Color	Plastic
	8P8C Point	1x1-1 Ports 1x2-2 Ports 1x3-3 Ports 1x4-4 Ports 1x5-5 Ports 1x6-6 Ports 1x7-7 Ports 1x8-8 Ports	0-Without Iron Peg 1-With Iron Peg	1-90 Angle 2-180 Angle	01-Fu" 02-3u" 03-6u" 04-15u" 05-30u" 06-50u	B-Black G-Gray W-White I-Iv	1-Nylon 2-PBT 3-ABS

PCB Modular Jack Series

KLS12-303-8P PCB Modular Jack 52 Series 1x2 Ports



MATERIAL

1.Housing Material: Glass Filled Polyester UL94V-0 PBT, NYLON
2.Housing Color: Black, Gray, Ivory, White or others
3.Contact Material: Phosphor Bronze Φ0.46mm
4.Plating: Gold plating over nickel. Gold plating thickness
1.5u "/ 3u" / 6u "/ 15u" / 30u "/ 50u"

ELECTRICAL

1.Current Rating: 1.5 Amp
2.Voltage Rating: 125VAC
3.Contact Resistance: 30 MΩ Max.
4.Insulation Resistance: 500 MΩ Min. @ 500VDC
5.Withstanding Voltage: 1000VAC RMS 50Hz 1 minute

MECHANICAL

1.Durability : 750 cycles Min.
2.PCB Retention pre-solder : 1 LB MIN

ENVIRONMENTAL

1.Storage :-40ºC~+80ºC
2.Operation:-40ºC~+70ºC

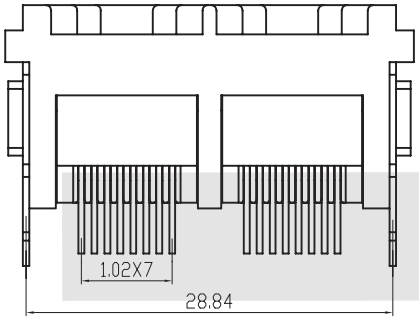

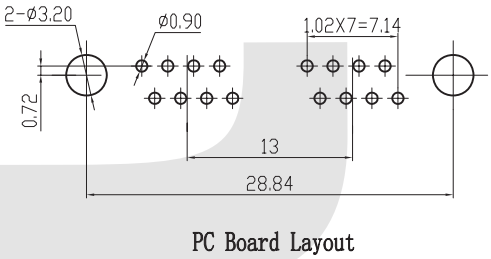

PC Board Layout

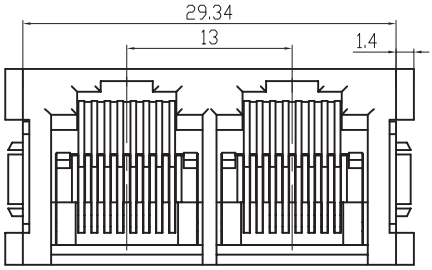

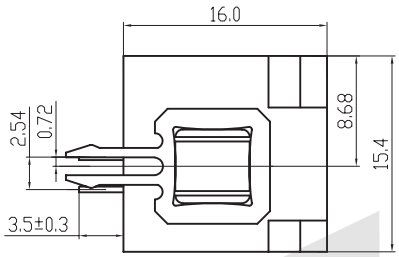

ORDER INFORMATION

KLS12-303 -8P8C- 1x2-1-2-XX-X-X

Part Number	Point NO.	Ports	Iron Peg	Angle	Gold Thickness	Color	Plastic
	8P8C Point	1x1-1 Ports 1x2-2 Ports 1x3-3 Ports 1x4-4 Ports 1x5-5 Ports 1x6-6 Ports 1x7-7 Ports 1x8-8 Ports	0-Without Iron Peg 1-With Iron Peg	1-90 Angle 2-180 Angle	01-Fu" 02-3u" 03-6u" 04-15u" 05-30u" 06-50u	B-Black G-Gray W-White I-Iv	1-Nylon 2-PBT 3-ABS

PCB Modular Jack Series

KLS12-303-8P PCB Modular Jack 52 Series 1x3 Ports



MATERIAL

1.Housing Material: Glass Filled Polyester UL94V-0 PBT, NYLON
2.Housing Color: Black, Gray, Ivory, White or others
3.Contact Material: Phosphor Bronze Φ0.46mm
4.Plating: Gold plating over nickel. Gold plating thickness
1.5u "/ 3u" / 6u "/ 15u" / 30u "/ 50u"

ELECTRICAL

1.Current Rating: 1.5 Amp
2.Voltage Rating: 125VAC
3.Contact Resistance: 30 MΩ Max.
4.Insulation Resistance: 500 MΩ Min. @ 500VDC
5.Withstanding Voltage: 1000VAC RMS 50Hz 1 minute

MECHANICAL

1.Durability : 750 cycles Min.
2.PCB Retention pre-solder : 1 LB MIN

ENVIRONMENTAL

1.Storage :-40ºC~+80ºC
2.Operation:-40ºC~+70ºC

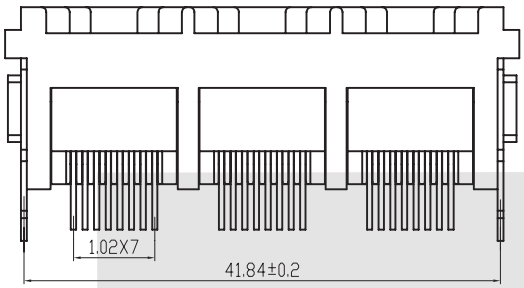

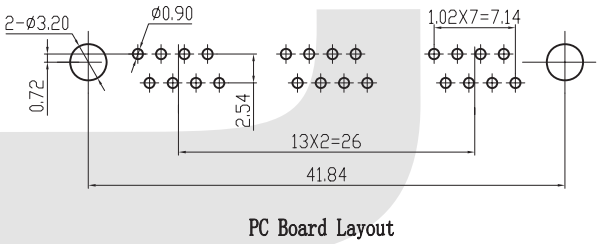

PC Board Layout

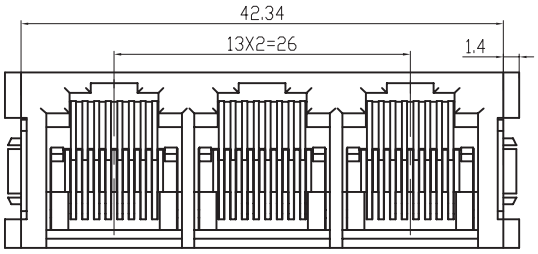

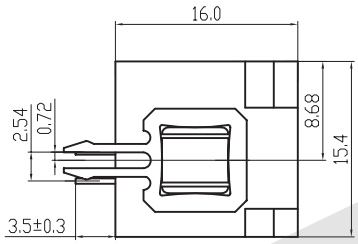

ORDER INFORMATION

KLS12-303 -8P8C- 1x3-1-2-XX-X-X

Part Number	Point NO.	Ports	Iron Peg	Angle	Gold Thickness	Color	Plastic
	8P8C Point	1x1-1 Ports 1x2-2 Ports 1x3-3 Ports 1x4-4 Ports 1x5-5 Ports 1x6-6 Ports 1x7-7 Ports 1x8-8 Ports	0-Without Iron Peg 1-With Iron Peg	1-90 Angle 2-180 Angle	01-Fu" 02-3u" 03-6u" 04-15u" 05-30u" 06-50u	B-Black G-Gray W-White I-Iv	1-Nylon 2-PBT 3-ABS

PCB Modular Jack Series

KLS12-303-8P PCB Modular Jack 52 Series 1x4 Ports



MATERIAL

1.Housing Material: Glass Filled Polyester UL94V-0 PBT, NYLON
2.Housing Color: Black, Gray, Ivory, White or others
3.Contact Material: Phosphor Bronze Φ0.46mm
4.Plating: Gold plating over nickel. Gold plating thickness
1.5u "/ 3u" / 6u "/ 15u" / 30u "/ 50u"

ELECTRICAL

1.Current Rating: 1.5 Amp
2.Voltage Rating: 125VAC
3.Contact Resistance: 30 MΩ Max.
4.Insulation Resistance: 500 MΩ Min. @ 500VDC
5.Withstanding Voltage: 1000VAC RMS 50Hz 1 minute

MECHANICAL

1.Durability : 750 cycles Min.
2.PCB Retention pre-solder : 1 LB MIN

ENVIRONMENTAL

1.Storage :-40°C~+80°C
2.Operation:-40°C~+70°C

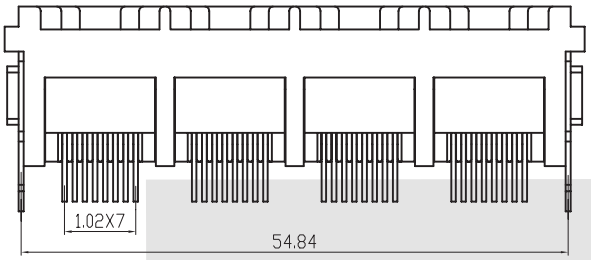

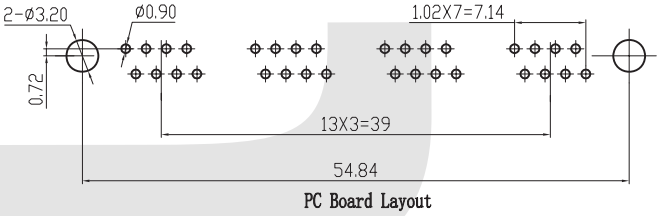

PC Board Layout

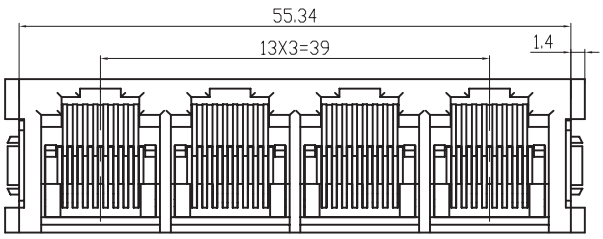

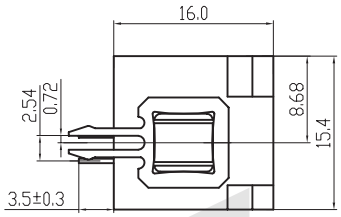

ORDER INFORMATION

KLS12-303 -8P8C- 1x4-1-2-XX-X-X

Part Number	Point NO.	Ports	Iron Peg	Angle	Gold Thickness	Color	Plastic
	8P8C Point	1x1-1 Ports 1x2-2 Ports 1x3-3 Ports 1x4-4 Ports 1x5-5 Ports 1x6-6 Ports 1x7-7 Ports 1x8-8 Ports	0-Without Iron Peg 1-With Iron Peg	1-90 Angle 2-180 Angle	01-Fu" 02-3u" 03-6u" 04-15u" 05-30u" 06-50u	B-Black G-Gray W-White I-Iv	1-Nylon 2-PBT 3-ABS

PCB Modular Jack Series

KLS12-303-8P PCB Modular Jack 52 Series 1x5 Ports



MATERIAL

1.Housing Material: Glass Filled Polyester UL94V-0 PBT, NYLON
2.Housing Color: Black, Gray, Ivory, White or others
3.Contact Material: Phosphor Bronze Φ0.46mm
4.Plating: Gold plating over nickel. Gold plating thickness
1.5u "/ 3u" / 6u "/ 15u" / 30u "/ 50u"

ELECTRICAL

1.Current Rating: 1.5 Amp
2.Voltage Rating: 125VAC
3.Contact Resistance: 30 MΩ Max.
4.Insulation Resistance: 500 MΩ Min. @ 500VDC
5.Withstanding Voltage: 1000VAC RMS 50Hz 1 minute

MECHANICAL

1.Durability : 750 cycles Min.
2.PCB Retention pre-solder : 1 LB MIN

ENVIRONMENTAL

1.Storage :-40ºC~+80ºC
2.Operation:-40ºC~+70ºC

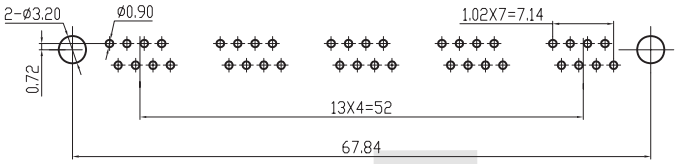

PC Board Layout

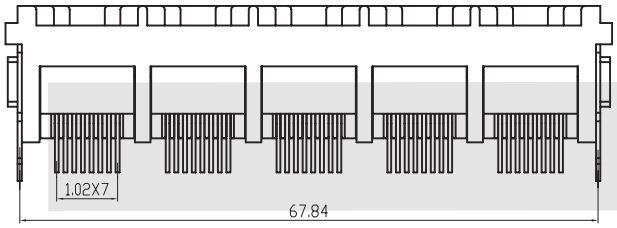

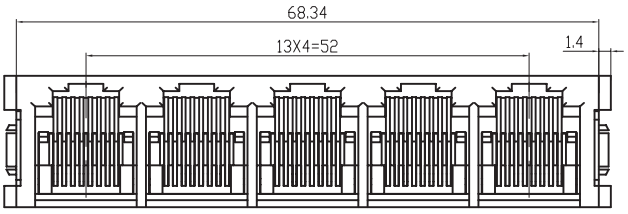

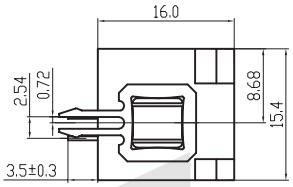

ORDER INFORMATION

KLS12-303 -8P8C- 1x5-1-2-XX-X-X

Part Number	Point NO.	Ports	Iron Peg	Angle	Gold Thickness	Color	Plastic
	8P8C Point	1x1-1 Ports 1x2-2 Ports 1x3-3 Ports 1x4-4 Ports 1x5-5 Ports 1x6-6 Ports 1x7-7 Ports 1x8-8 Ports	0-Without Iron Peg 1-With Iron Peg	1-90 Angle 2-180 Angle	01-Fu" 02-3u" 03-6u" 04-15u" 05-30u" 06-50u	B-Black G-Gray W-White I-Iv	1-Nylon 2-PBT 3-ABS

PCB Modular Jack Series

KLS12-303-8P PCB Modular Jack 52 Series 1x6 Ports



MATERIAL

1.Housing Material: Glass Filled Polyester UL94V-0 PBT, NYLON
2.Housing Color: Black, Gray, Ivory, White or others
3.Contact Material: Phosphor Bronze Φ0.46mm
4.Plating: Gold plating over nickel. Gold plating thickness
1.5u "/ 3u" / 6u "/ 15u" / 30u "/ 50u"

ELECTRICAL

1.Current Rating: 1.5 Amp
2.Voltage Rating: 125VAC
3.Contact Resistance: 30 MΩ Max.
4.Insulation Resistance: 500 MΩ Min. @ 500VDC
5.Withstanding Voltage: 1000VAC RMS 50Hz 1 minute

MECHANICAL

1.Durability : 750 cycles Min.
2.PCB Retention pre-solder : 1 LB MIN

ENVIRONMENTAL

1.Storage :-40ºC~+80ºC
2.Operation:-40ºC~+70ºC

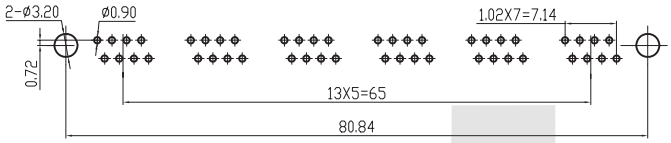

PC Board Layout

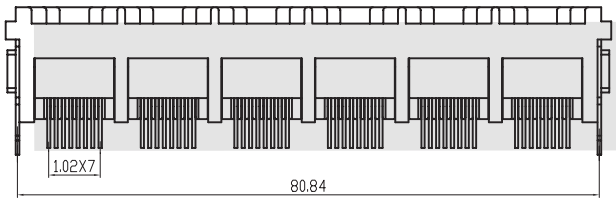

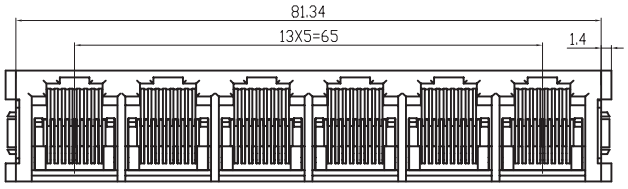

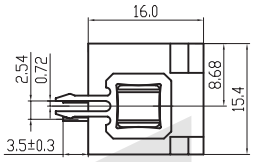

ORDER INFORMATION

KLS12-303 -8P8C- 1x6-1-2-XX-X-X

Part Number	Point NO.	Ports	Iron Peg	Angle	Gold Thickness	Color	Plastic
	8P8C Point	1x1-1 Ports 1x2-2 Ports 1x3-3 Ports 1x4-4 Ports 1x5-5 Ports 1x6-6 Ports 1x7-7 Ports 1x8-8 Ports	0-Without Iron Peg 1-With Iron Peg	1-90 Angle 2-180 Angle	01-Fu" 02-3u" 03-6u" 04-15u" 05-30u" 06-50u	B-Black G-Gray W-White I-Iv	1-Nylon 2-PBT 3-ABS

PCB Modular Jack Series

KLS12-303-8P PCB Modular Jack 52 Series 1x7 Ports



MATERIAL

1.Housing Material: Glass Filled Polyester UL94V-0 PBT, NYLON
2.Housing Color: Black, Gray, Ivory, White or others
3.Contact Material: Phosphor Bronze Φ0.46mm
4.Plating: Gold plating over nickel. Gold plating thickness
1.5u "/ 3u" / 6u "/ 15u" / 30u "/ 50u"

ELECTRICAL

1.Current Rating: 1.5 Amp
2.Voltage Rating: 125VAC
3.Contact Resistance: 30 MΩ Max.
4.Insulation Resistance: 500 MΩ Min. @ 500VDC
5.Withstanding Voltage: 1000VAC RMS 50Hz 1 minute

MECHANICAL

1.Durability : 750 cycles Min.
2.PCB Retention pre-solder : 1 LB MIN

ENVIRONMENTAL

1.Storage :-40°C~+80°C
2.Operation:-40°C~+70°C

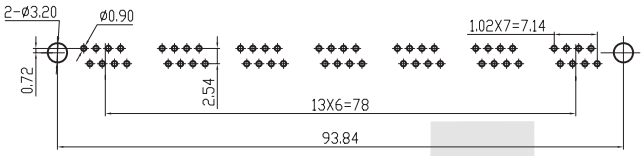

PC Board Layout

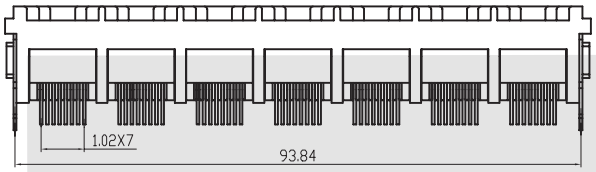

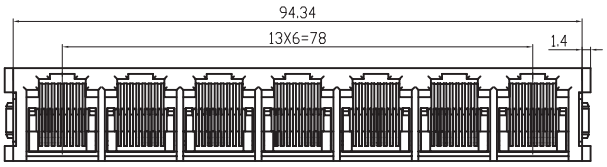

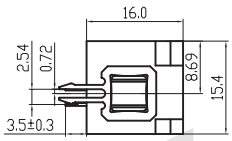

ORDER INFORMATION

KLS12-303 -8P8C- 1x7-1-2-XX-X-X

Part Number	Point NO.	Ports	Iron Peg	Angle	Gold Thickness	Color	Plastic
	8P8C Point	1x1-1 Ports 1x2-2 Ports 1x3-3 Ports 1x4-4 Ports 1x5-5 Ports 1x6-6 Ports 1x7-7 Ports 1x8-8 Ports	0-Without Iron Peg 1-With Iron Peg	1-90 Angle 2-180 Angle	01-Fu" 02-3u" 03-6u" 04-15u" 05-30u" 06-50u	B-Black G-Gray W-White I-Iv	1-Nylon 2-PBT 3-ABS

PCB Modular Jack Series

KLS12-303-8P PCB Modular Jack 52 Series 1x8 Ports



MATERIAL
1.Housing Material: Glass Filled Polyester UL94V-0 PBT, NYLON
2.Housing Color: Black, Gray, Ivory, White or others
3.Contact Material: Phosphor Bronze Φ0.46mm
4.Plating: Gold plating over nickel. Gold plating thickness
1.5u "/ 3u" / 6u "/ 15u" / 30u "/ 50u"

ELECTRICAL
1.Current Rating: 1.5 Amp
2.Voltage Rating: 125VAC
3.Contact Resistance: 30 MΩ Max.
4.Insulation Resistance: 500 MΩ Min. @ 500VDC
5.Withstanding Voltage: 1000VAC RMS 50Hz 1 minute

MECHANICAL
1.Durability : 750 cycles Min.
2.PCB Retention pre-solder : 1 LB MIN

ENVIRONMENTAL
1.Storage :-40°C~+80°C
2.Operation:-40°C~+70°C

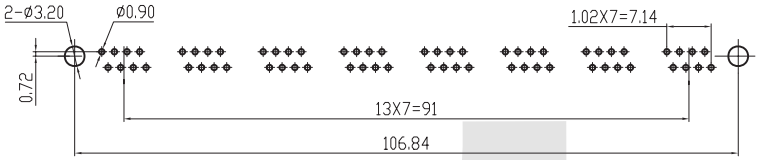

PC Board Layout

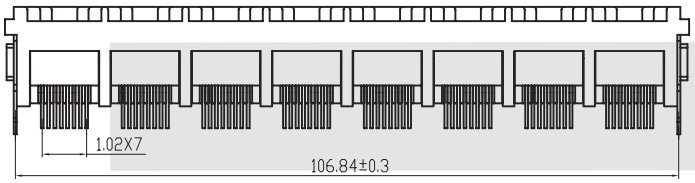

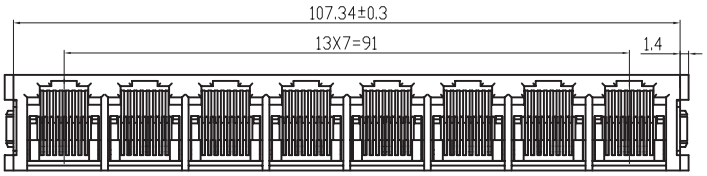

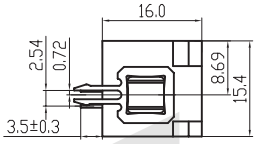

ORDER INFORMATION

KLS12-303 -8P8C- 1x8-1-2-XX-X-X

Part Number	Point NO.	Ports	Iron Peg	Angle	Gold Thickness	Color	Plastic
	8P8C Point	1x1-1 Ports 1x2-2 Ports 1x3-3 Ports 1x4-4 Ports 1x5-5 Ports 1x6-6 Ports 1x7-7 Ports 1x8-8 Ports	0-Without Iron Peg 1-With Iron Peg	1-90 Angle 2-180 Angle	01-Fu" 02-3u" 03-6u" 04-15u" 05-30u" 06-50u	B-Black G-Gray W-White I-Iv	1-Nylon 2-PBT 3-ABS

PCB Modular Jack Series

KLS12-304-10P PCB Modular Jack 55 Series

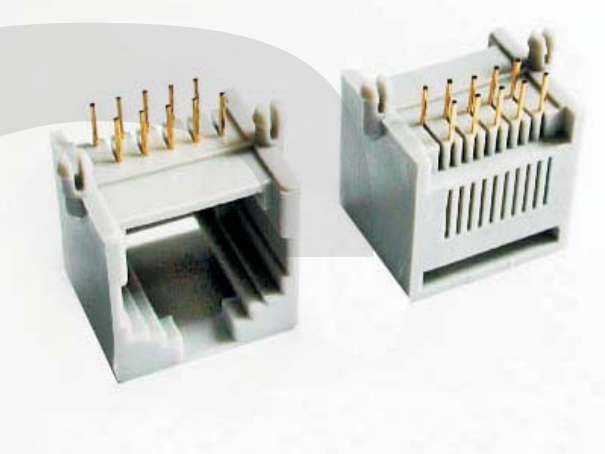

MATERIAL

1.Housing Material: Glass Filled Polyester UL94V-0 PBT, NYLON
2.Housing Color: Black, Gray, Ivory, White or others
3.Contact Material: Phosphor Bronze Φ0.46mm
4.PLATING: Gold plating over nickel. Gold plating thickness
1.5u "/ 3u" / 6u "/ 15u" / 30u "/ 50u"

ELECTRICAL

1.Current Rating: 1.5 Amp
2.Voltage Rating: 125VAC
3.Contact Resistance: 30 MΩ Max.
4.Insulation Resistance: 500 MΩ Min. @ 500VDC
5.Withstanding Voltage: 1000VAC RMS 50Hz 1 minute

MECHANICAL

1.Durability : 750 cycles Min.
2.PCB Retention pre-solder : 1 LB MIN

ENVIRONMENTAL

1.Storage :-40°C~+80°C
2.Operation:-40°C~+70°C

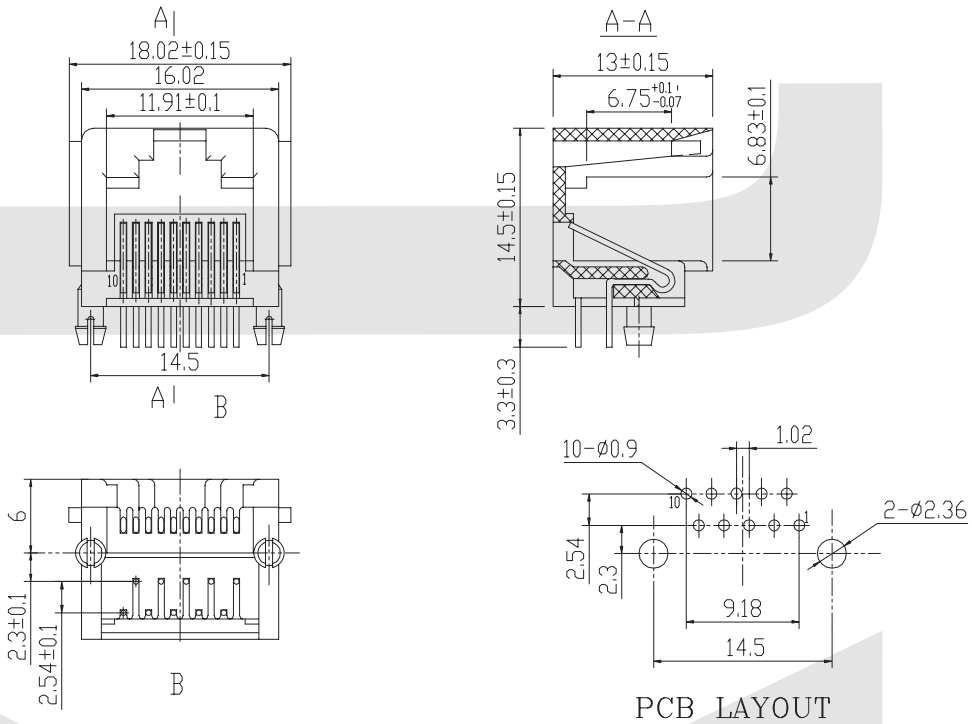

ORDER INFORMATION

KLS12-304-10P10C-W/O-B-XX-X

Part Number	Point NO.	Panel	Part Color	Gold Thickness	Plastic
	10P10C Point 10P8C Point	W-With Panel W/O-Without Panel	1-Black 2-Gray 3-White 4-IV	01-Fu" 02-3u" 03-6u" 04-15u" 05-30u" 06-50u	1-Nylon 2-PBT 3-ABS

PCB Modular Jack Series

KLS12-310-6P PCB Modular Jack 53 Series

MATERIAL

1.Housing Material: Glass Filled Polyester UL94V-0 PBT, NYLON
2.Housing Color: Black, Gray, Ivory, White or others
3.Contact Material: Phosphor Bronze Φ0.46mm
4.PLATING: Gold plating over nickel. Gold plating thickness
1.5u "/ 3u" / 6u "/ 15u" / 30u "/ 50u"

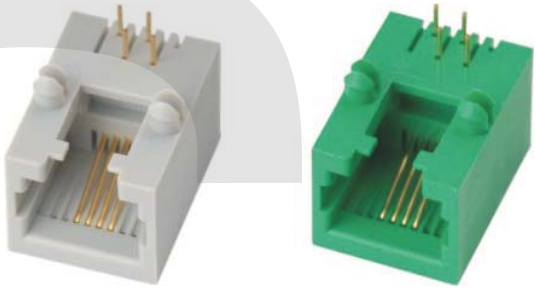

ELECTRICAL

1.Current Rating: 1.5 Amp
2.Voltage Rating: 125VAC
3.Contact Resistance: 30 MΩ Max.
4.Insulation Resistance: 500 MΩ Min. @ 500VDC
5.Withstanding Voltage: 1000VAC RMS 50Hz 1 minute

MECHANICAL

1.Durability : 750 cycles Min.
2.PCB Retention pre-solder : 1 LB MIN

ENVIRONMENTAL

1.Storage :-40°C~+80°C
2.Operation:-40°C~+70°C

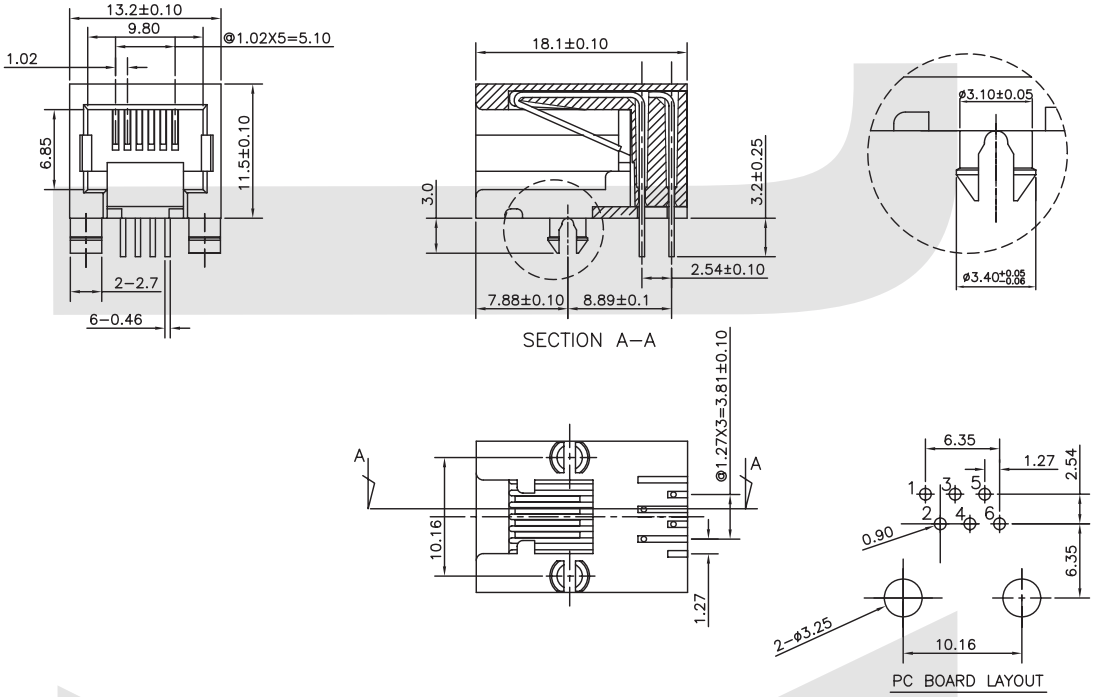

ORDER INFORMATION

KLS12-310 - 6P6C-B-XX-X

Part Number	Point NO.	Part Color	Gold Thickness	Plastic
	6P6C Point 6P4C Point 6P2C Point	1-Black 2-Gray 3-White 4-IV	01-Fu" 02-3u" 03-6u" 04-15u" 05-30u" 06-50u	1-Nylon 2-PBT 3-ABS

PCB Modular Jack Series

KLS12-310B-6P PCB Modular Jack 53 Series Flat Pin



MATERIAL

1.Housing Material: Glass Filled Polyester UL94V-0 PBT, NYLON
2.Housing Color: Black, Gray, Ivory, White or others
3.Contact Material: Phosphor Bronze 0.35mm Flat Pin
4.PLATING: Gold plating over nickel. Gold plating thickness
1.5u "/ 3u" / 6u "/ 15u" / 30u "/ 50u"

ELECTRICAL

1.Current Rating: 1.5 Amp
2.Voltage Rating: 125VAC
3.Contact Resistance: 30 MΩ Max.
4.Insulation Resistance: 500 MΩ Min. @ 500VDC
5.Withstanding Voltage: 1000VAC RMS 50Hz 1 minute

MECHANICAL

1.Durability : 750 cycles Min.
2.PCB Retention pre-solder : 1 LB MIN

ENVIRONMENTAL

1.Storage :-40°C~+80°C
2.Operation:-40°C~+70°C

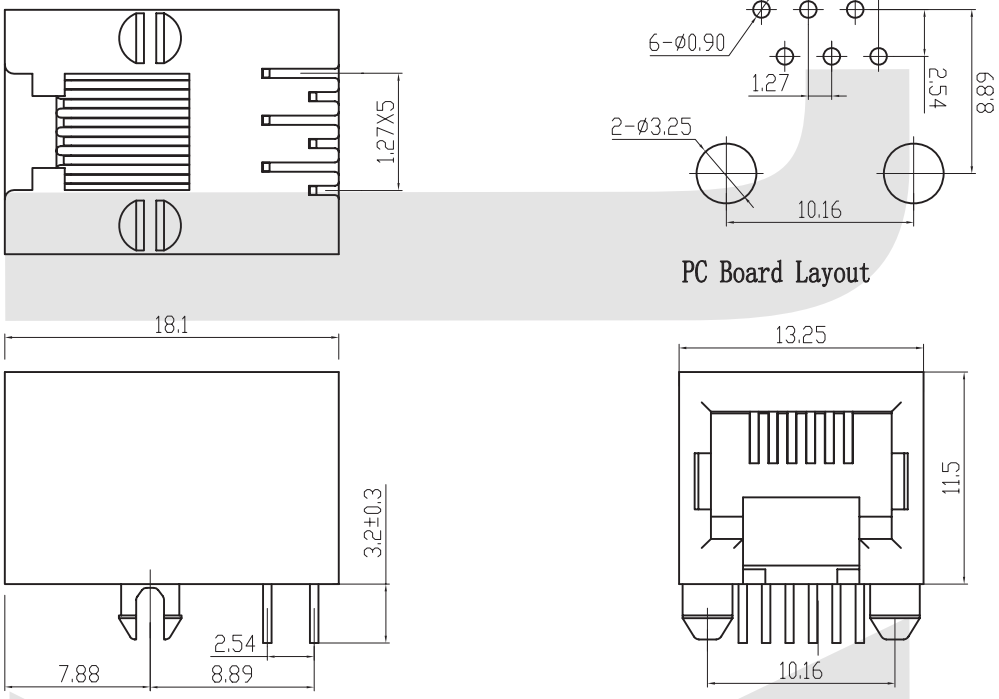

ORDER INFORMATION

KLS12-310B- 6P6C-B-XX-X

Part Number	Point NO.	Part Color	Gold Thickness	Plastic
	6P6C Point 6P4C Point 6P2C Point	1-Black 2-Gray 3-White 4-IV	01-Fu" 02-3u" 03-6u" 04-15u" 05-30u" 06-50u	1-Nylon 2-PBT 3-ABS

PCB Modular Jack Series

KLS12-311-8P PCB Modular Jack 53 Series Flat Pin

MATERIAL

1.Housing Material: Glass Filled Polyester UL94V-0 PBT, NYLON
2.Housing Color: Black, Gray, Ivory, White or others
3.Contact Material: Phosphor Bronze 0.35mm Flat Pin
4.PLATING: Gold plating over nickel. Gold plating thickness
1.5u "/ 3u" / 6u "/ 15u" / 30u "/ 50u"





ELECTRICAL

1.Current Rating: 1.5 Amp
2.Voltage Rating: 125VAC
3.Contact Resistance: 30 MΩ Max.
4.Insulation Resistance: 500 MΩ Min. @ 500VDC
5.Withstanding Voltage: 1000VAC RMS 50Hz 1 minute

MECHANICAL

1.Durability : 750 cycles Min.
2.PCB Retention pre-solder : 1 LB MIN

ENVIRONMENTAL

1.Storage :-40ºC~+80ºC
2.Operation:-40ºC~+70ºC

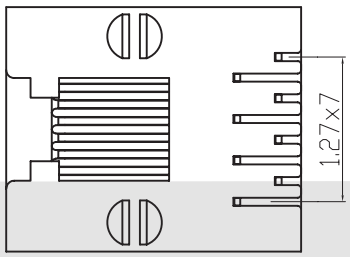

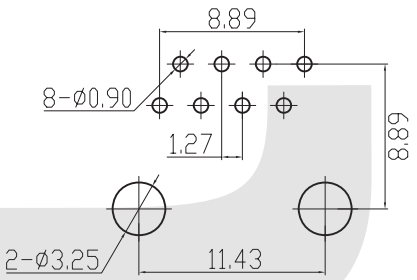

PC Board Layout

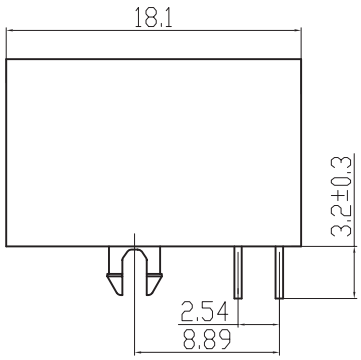

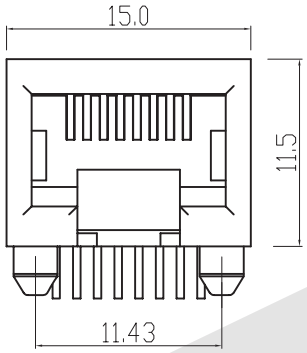

ORDER INFORMATION

KLS12-311- 8P8C-B-XX-X

Part Number	Point NO.	Part Color	Gold Thickness	Plastic
	8P8C Point 8P6C Point 8P4C Point	1-Black 2-Gray 3-White 4-IV	01-Fu" 02-3u" 03-6u" 04-15u" 05-30u" 06-50u	1-Nylon 2-PBT 3-ABS

PCB Modular Jack Series

KLS12-312-10P PCB Modular Jack 56 Series



MATERIAL

1.Housing Material : Glass Filled Polyester UL94V-0 PBT, NYLON
2.Housing Color : Black, Gray, Ivory, White or others
3.Contact Material : Phosphor Bronze Φ0.46mm
4.PLATING: Gold plating over nickel. Gold plating thickness
1.5u″/3u″/6u″/15u″/30u″/50u″

ELECTRICAL

1.Current Rating:1.5Amp
2.Voltage Rating:125VAC
3.Contact Resistance : 30MΩ Max.
4.Insulation Resistance : 500 MΩ Min @500VDC
5.Withstanding Voltage: 1000VAC RMS 50Hz 1 minute

MECHANICAL

1.Durability : 750 cycles Min
2.PCB Retention pre-solder : 1 LB Min

ENVIRONMENTAL

1.Storage :-40°C~+80°C
2.Operation:-40°C~+70°C

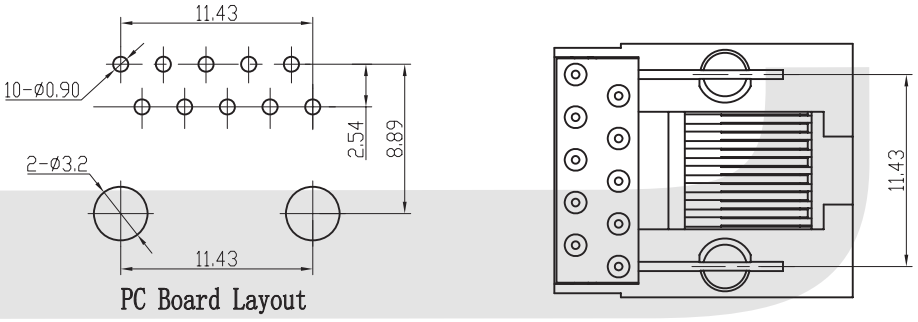

PC Board Layout

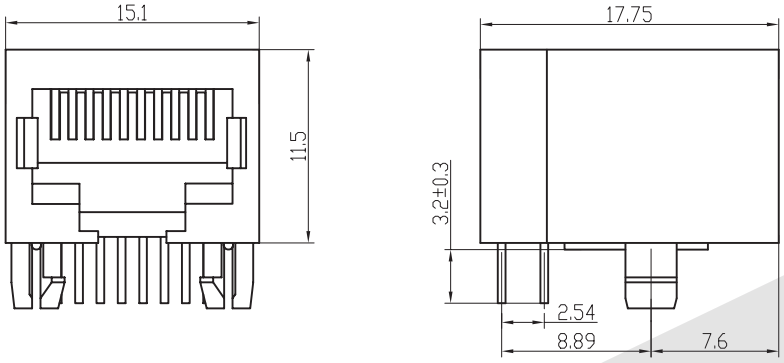

ORDER INFORMATION

KLS12-312 - 10P8C-B-XX-X

Part Number	Point NO.	Part Color	Gold Thickness	Plastic
	10P10C Point 10P8C Point	1-Black 2-Gray 3-White 4-IV	01-Fu" 02-3u" 03-6u" 04-15u" 05-30u" 06-50u	1-Nylon 2-PBT 3-ABS

PCB Modular Jack Series

KLS12-312-10P PCB Modular Jack 56 Series 1x2 Ports

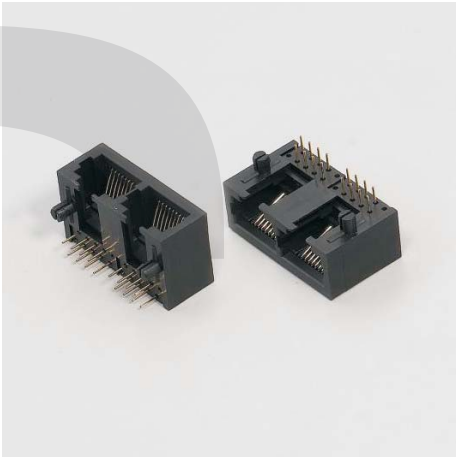

MATERIAL

1.Housing Material : Glass Filled Polyester UL94V-0 PBT, NYLON
2.Housing Color : Black, Gray, Ivory, White or others
3.Contact Material : Phosphor Bronze Φ0.46mm
4.PLATING: Gold plating over nickel. Gold plating thickness
1.5u″/3u″/6u″/15u″/30u″/50u″

ELECTRICAL

1.Current Rating:1.5Amp
2.Voltage Rating:125VAC
3.Contact Resistance : 30MΩ Max.
4.Insulation Resistance : 500 MΩ Min @500VDC
5.Withstanding Voltage: 1000VAC RMS 50Hz 1 minute

MECHANICAL

1.Durability : 750 cycles Min
2.PCB Retention pre-solder : 1 LB Min

ENVIRONMENTAL

1.Storage :-40ºC~+80ºC
2.Operation:-40ºC~+70ºC

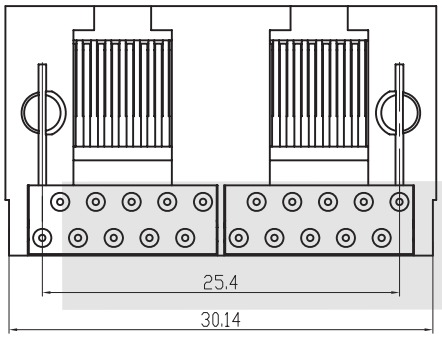

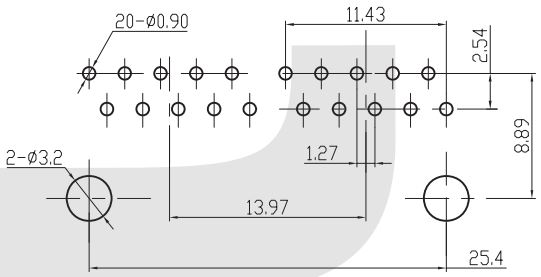

PC Board Layout

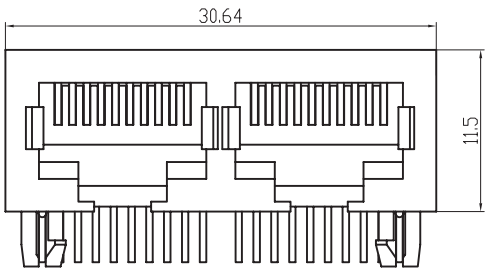

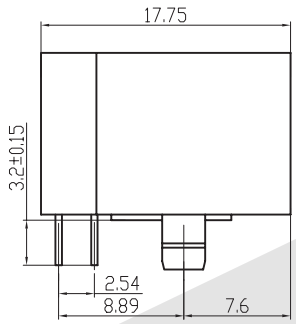

ORDER INFORMATION

KLS12-312 - 10P10C-1x2-B-XX-X

Part Number	Point NO.	Ports	Part Color	Gold Thickness	Plastic
	10P10C Point 10P8C Point	1x2-2 Ports 1x4-4 Ports	1-Black 2-Gray 3-White 4-IV	01-Fu" 02-3u" 03-6u" 04-15u" 05-30u" 06-50u	1-Nylon 2-PBT 3-ABS

PCB Modular Jack Series

KLS12-312-10P PCB Modular Jack 56 Series 1x4 Ports



MATERIAL

1.Housing Material : Glass Filled Polyester UL94V-0 PBT, NYLON
2.Housing Color : Black, Gray, Ivory, White or others
3.Contact Material : Phosphor Bronze Φ0.46mm
4.PLATING: Gold plating over nickel. Gold plating thickness
1.5u″/3u″/6u″/15u″/30u″/50u″

ELECTRICAL

1.Current Rating:1.5Amp
2.Voltage Rating:125VAC
3.Contact Resistance : 30MΩ Max.
4.Insulation Resistance : 500 MΩ Min @500VDC
5.Withstanding Voltage: 1000VAC RMS 50Hz 1 minute

MECHANICAL

1.Durability : 750 cycles Min
2.PCB Retention pre-solder : 1 LB Min

ENVIRONMENTAL

1.Storage :-40ºC~+80ºC
2.Operation:-40ºC~+70ºC

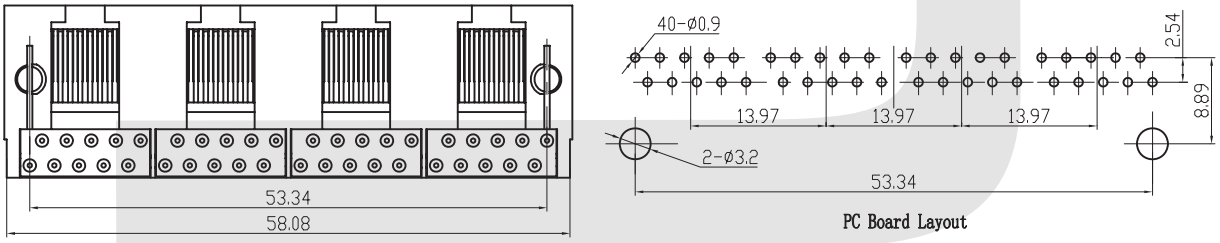

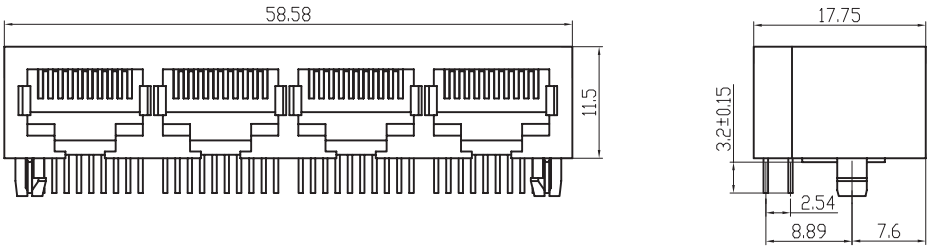

ORDER INFORMATION

KLS12-312 - 10P10C-1x4-B-XX-X

Part Number	Point NO.	Ports	Part Color	Gold Thickness	Plastic
	10P10C Point 10P8C Point	1x2-2 Ports 1x4-4 Ports	1-Black 2-Gray 3-White 4-IV	01-Fu" 02-3u" 03-6u" 04-15u" 05-30u" 06-50u	1-Nylon 2-PBT 3-ABS

PCB Modular Jack Series

KLS12-316-10P PCB Modular Jack 53 Series With Shielded

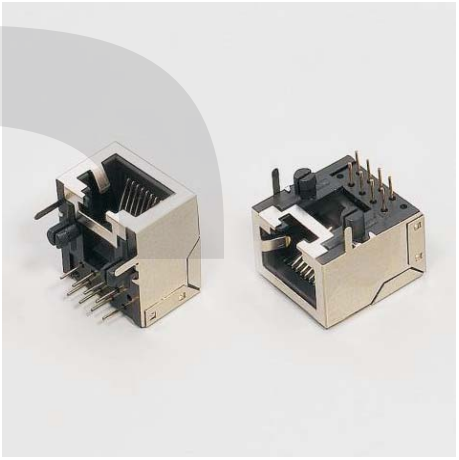

MATERIAL

1.Housing Material: Glass Filled Polyester UL94V-0 PBT, NYLON
2.Housing Color: Black, Gray, Ivory, White or others
3.Contact Material: Phosphor Bronze Φ0.46mm
4.PLATING: Gold plating over nickel. Gold plating thickness
1.5u "/ 3u" / 6u "/ 15u" / 30u "/ 50u"
5.SHIELD: 0.23 Thickness Brass with nickel plated

ELECTRICAL

1.Current Rating: 1.5 Amp
2.Voltage Rating: 125VAC
3.Contact Resistance: 30 MΩ Max.
4.Insulation Resistance: 500 MΩ Min. @ 500VDC
5.Withstanding Voltage: 1000VAC RMS 50Hz 1 minute

MECHANICAL

1.Durability : 750 cycles Min.
2.PCB Retention pre-solder : 1 LB MIN

ENVIRONMENTAL

1.Storage :-40°C~+80°C
2.Operation:-40°C~+70°C

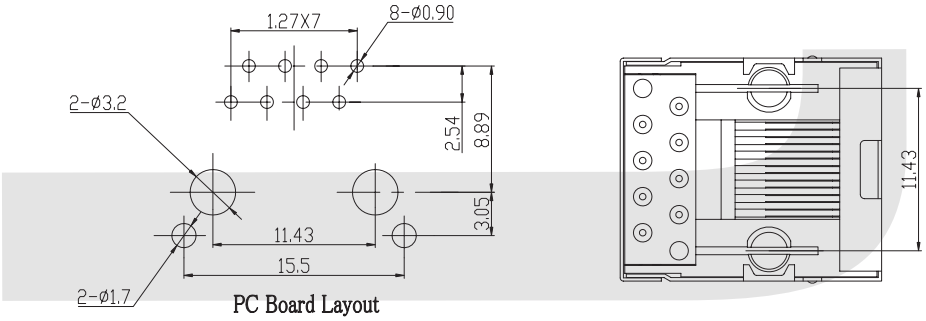

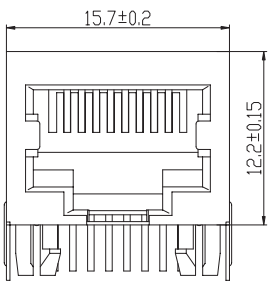

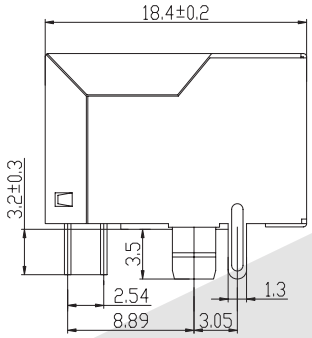

ORDER INFORMATION

KLS12-316 - 10P8C- F -1-XX-X

Part Number	Point NO.	Shielded	Back Peg	Gold Thickness	Plastic
	10P10C Point 10P8C Point	F-Full Shielded E-Shielded with EMI	1-Front Peg 3.05 2-Front Peg 3.68 3-Front Peg 4.57 4-Back Peg 3.05	01-Fu" 02-3u" 03-6u" 04-15u" 05-30u" 06-50u	1-Nylon 2-PBT 3-ABS

PCB Modular Jack Series

KLS12-316-10P PCB Modular Jack 53 Series With Shielded and EMI

MATERIAL

1.Housing Material: Glass Filled Polyester UL94V-0 PBT, NYLON
2.Housing Color: Black, Gray, Ivory, White or others
3.Contact Material: Phosphor Bronze Φ0.46mm
4.PLATING: Gold plating over nickel. Gold plating thickness
1.5u "/ 3u" / 6u "/ 15u" / 30u "/ 50u"
5.SHIELD: 0.23 Thickness Brass with nickel plated

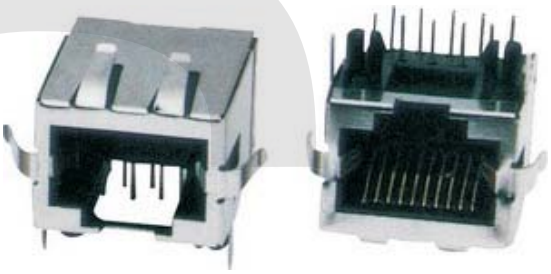

ELECTRICAL

1.Current Rating: 1.5 Amp
2.Voltage Rating: 125VAC
3.Contact Resistance: 30 MΩ Max.
4.Insulation Resistance: 500 MΩ Min. @ 500VDC
5.Withstanding Voltage: 1000VAC RMS 50Hz 1 minute

MECHANICAL

1.Durability : 750 cycles Min.
2.PCB Retention pre-solder : 1 LB MIN

ENVIRONMENTAL

1.Storage :-40°C~+80°C
2.Operation:-40°C~+70°C

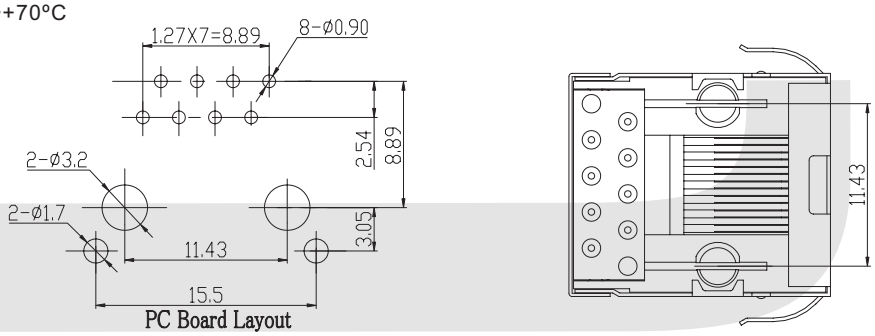

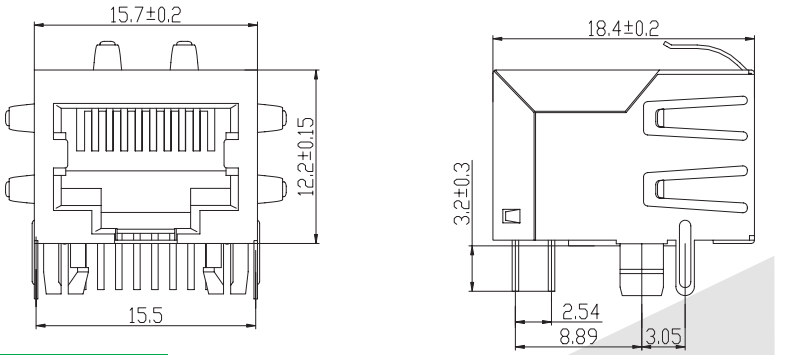

ORDER INFORMATION

KLS12-316 - 10P8C- E -1-XX-X

Part Number	Point NO.	Shielded	Back Peg	Gold Thickness	Plastic
	10P10C Point 10P8C Point	F-Full Shielded E-Shielded with EMI	1-Front Peg 3.05 2-Front Peg 3.68 3-Front Peg 4.57 4-Back Peg 3.05	01-Fu" 02-3u" 03-6u" 04-15u" 05-30u" 06-50u	1-Nylon 2-PBT 3-ABS

PCB Modular Jack Series

KLS12-317-6P PCB Modular Jack Mini 53 Series

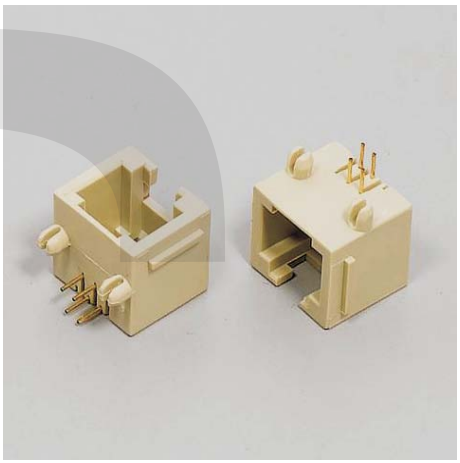

MATERIAL

1.Housing Material: Glass Filled Polyester UL94V-0 PBT, NYLON
2.Housing Color: Black, Gray, Ivory, White or others
3.Contact Material: Phosphor Bronze Φ0.46mm
4.PLATING: Gold plating over nickel. Gold plating thickness
1.5u "/ 3u" / 6u "/ 15u" / 30u "/ 50u"

ELECTRICAL

1.Current Rating: 1.5 Amp
2.Voltage Rating: 125VAC
3.Contact Resistance: 30 MΩ Max.
4.Insulation Resistance: 500 MΩ Min. @ 500VDC
5.Withstanding Voltage: 1000VAC RMS 50Hz 1 minute

MECHANICAL

1.Durability : 750 cycles Min.
2.PCB Retention pre-solder : 1 LB MIN

ENVIRONMENTAL

1.Storage :-40°C~+80°C
2.Operation:-40°C~+70°C

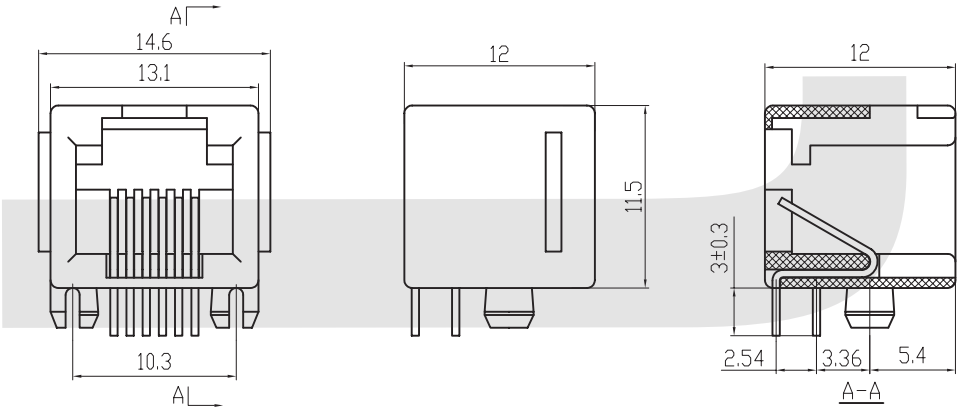

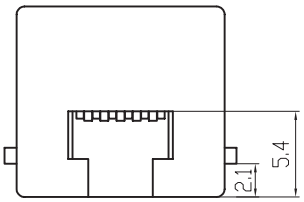

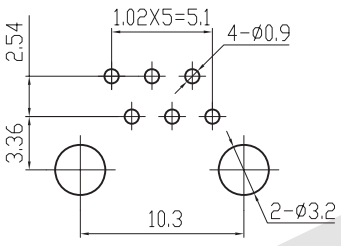

PC Board Layout

ORDER INFORMATION

KLS12-317- 6P6C-W-B-XX-X

Part Number	Point NO.	Panel	Part Color	Gold Thickness	Plastic
	8P8C Point 8P6C Point 8P4C Point	W-With Panel W/O-Without Panel	1-Black 2-Gray 3-White 4-IV	01-Fu" 02-3u" 03-6u" 04-15u" 05-30u" 06-50u	1-Nylon 2-PBT 3-ABS

PCB Modular Jack Series

KLS12-318-6P PCB Modular Jack 57 Series With Half Shielded



MATERIAL

1.Housing Material: Glass Filled Polyester UL94V-0 PBT, NYLON
2.Housing Color: Black, Gray, Ivory, White or Others
3.Contact Material: Phosphor Bronze 0.35mm Flat Pin
4.Plating: Gold plating over nickel. Gold plating thickness
1.5u "/ 3u" / 6u "/ 15u" / 30u "/ 50u"
5.Shield : 0.23 Thickness Brass With Nickel Plated

ELECTRICAL

1.Current Rating:1.5Amp
2.Voltage Rating:125VAC
3.Contact Resistance: 30 MΩ Max.
4.Insulation Resistance: 500 MΩ Min. @500VDC
5.Withstanding Voltage:1000VAC RMS 50Hz 1 minute

MECHANICAL

1.Durability : 750 cycles Min.
2.PCB Retention pre-solder : 1 LB MIN

ENVIRONMENTAL

1.Storage :-40°C~+80°C
2.Operation:-40°C~+70°C

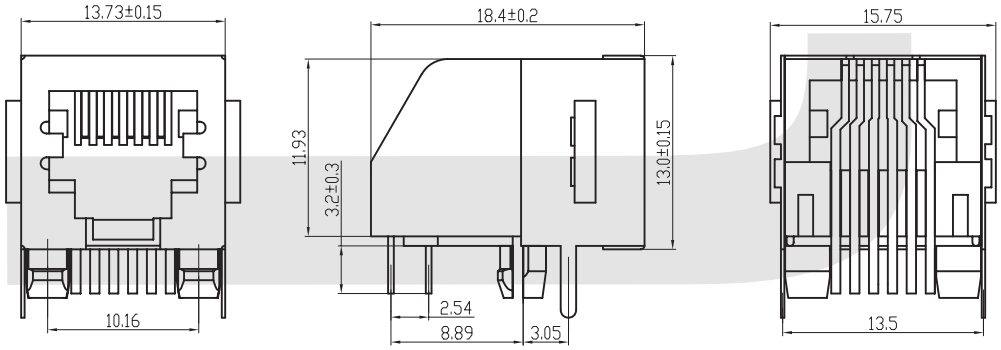

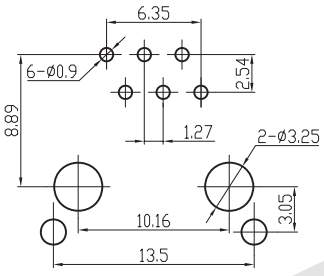

PC Board Layout

ORDER INFORMATION

KLS12-318 - 6P6C-XX-X

Part Number	Point NO.	Gold Thickness	Plastic
	6P6C Point 6P4C Point	01-Fu" 02-3u" 03-6u" 04-15u" 05-30u" 06-50u	1-Nylon 2-PBT 3-ABS

PCB Modular Jack Series

XII

KLS12-319-8P PCB Modular Jack 57 Series With Half Shielded



MATERIAL

1.Housing Material: Glass Filled Polyester UL94V-0 PBT, NYLON
2.Housing Color: Black, Gray, Ivory, White or Others
3.Contact Material: Phosphor Bronze 0.35mm Flat Pin
4.Plating: Gold plating over nickel. Gold plating thickness
1.5u "/ 3u" / 6u "/ 15u" / 30u "/ 50u"
5.Shield : 0.23 Thickness Brass With Nickel Plated

ELECTRICAL

1.Current Rating:1.5Amp
2.Voltage Rating:125VAC
3.Contact Resistance: 30 MΩ Max.
4.Insulation Resistance: 500 MΩ Min. @500VDC
5.Withstanding Voltage:1000VAC RMS 50Hz 1 minute

MECHANICAL

1.Durability : 750 cycles Min.
2.PCB Retention pre-solder : 1 LB MIN

ENVIRONMENTAL

1.Storage :-40°C~+80°C
2.Operation:-40°C~+70°C

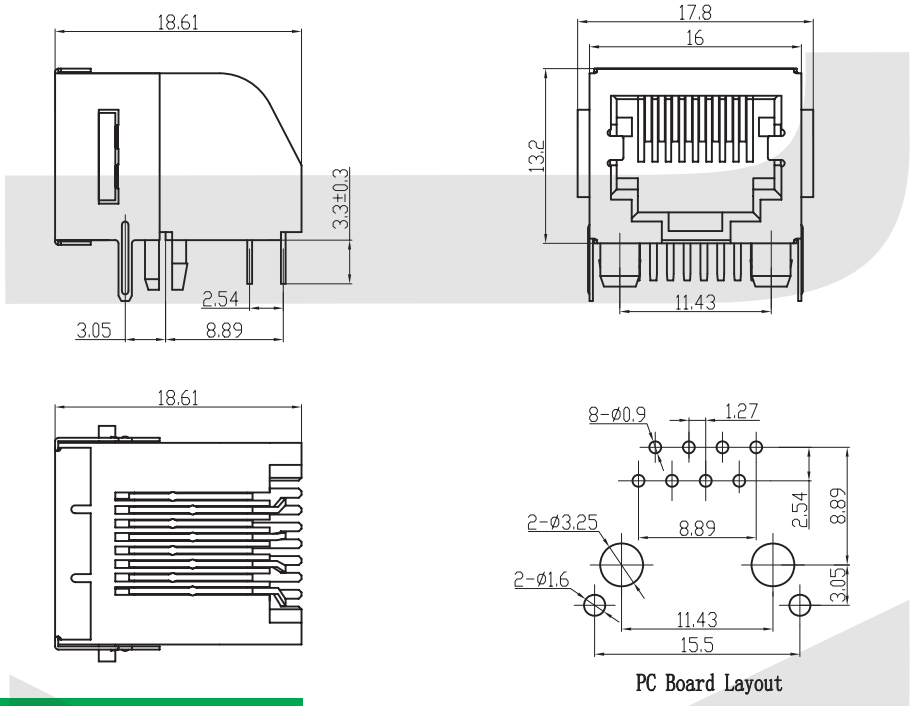

PC Board Layout

ORDER INFORMATION

KLS12-319 - 8P8C-XX-X

Part Number	Point NO.	Gold Thickness	Plastic
	8P8C Point 8P6C Point 8P4C Point	01-Fu" 02-3u" 03-6u" 04-15u" 05-30u" 06-50u	1-Nylon 2-PBT 3-ABS

PCB Modular Jack Series

KLS12-320-6P PCB Modular Jack 59 Series With EMI Shielded



MATERIAL

1.Housing Material: Glass Filled Polyester UL94V-0 PBT, NYLON
2.Housing Color: Black, Gray, Ivory, White or others
3.Contact Material: Phosphor Bronze Φ0.46mm
4.Plating: Gold plating over nickel. Gold plating thickness
1.5u "/ 3u" / 6u "/ 15u" / 30u "/ 50u"
5.Shield: 0.23 Thickness Brass with nickel plated

ELECTRICAL

1.Current Rating: 1.5 Amp
2.Voltage Rating: 125VAC
3.Contact Resistance: 30 MΩ Max.
4.Insulation Resistance: 500 MΩ Min. @ 500VDC
5.Withstanding Voltage: 1000VAC RMS 50Hz 1 minute

MECHANICAL

1.Durability : 750 cycles Min.
2.PCB Retention pre-solder : 1 LB MIN

ENVIRONMENTAL

1.Storage :-40°C~+80°C
2.Operation:-40°C~+70°C

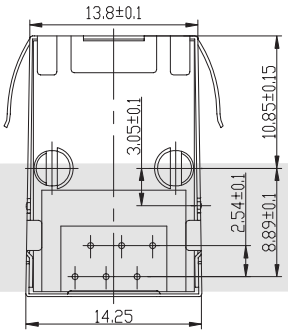

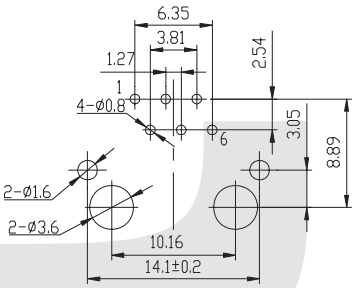

PCB LAYOUT

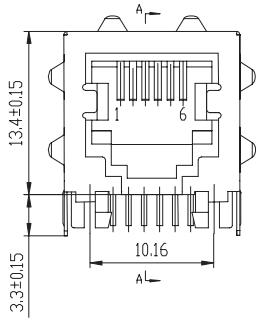

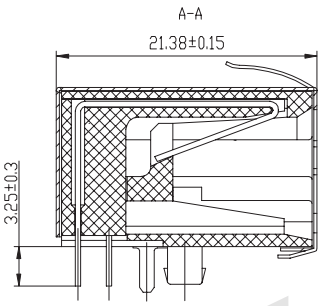

ORDER INFORMATION

KLS12-320 - 6P6C-E - 1 -XX-X

Part Number	Point NO.	Shield	Peg/TAB	Gold Thickness	Plastic
	6P6C Point	W-With Shield E-Shield With EMI	0-W/O Peg 1-Front Peg 3.05 2-Front Peg 3.68 3-Front Peg 4.57 4-Back Peg 3.05	01-Fu" 02-3u" 03-6u" 04-15u" 05-30u" 06-50u	1-Nylon 2-PBT 3-ABS

PCB Modular Jack Series

KLS12-323-8P PCB Modular Jack 59 Series 1x2 Ports

XII

MATERIAL

1.Housing Material : Glass Filled Polyester UL94V-0 PBT, NYLON
2.Housing Color : Black, Gray, Ivory, White or others
3.Contact Material : Phosphor Bronze Φ0.46mm
4.PLATING: Gold plating over nickel. Gold plating thickness
1.5u″/3u″/6u″/15u″/30u″/50u″



ELECTRICAL

1.Current Rating:1.5Amp
2.Voltage Rating:125VAC
3.Contact Resistance : 30MΩ Max.
4.Insulation Resistance : 500 MΩ Min @500VDC
5.Withstanding Voltage: 1000VAC RMS 50Hz 1 minute

MECHANICAL

1.Durability : 750 cycles Min
2.PCB Retention pre-solder : 1 LB Min

ENVIRONMENTAL

1.Storage :-40ºC~+80ºC
2.Operation:-40ºC~+70ºC

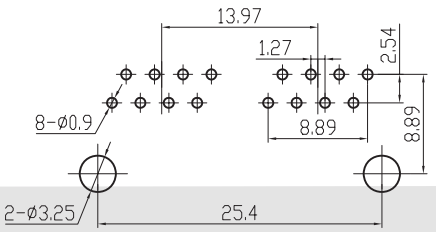

PC Board Layout

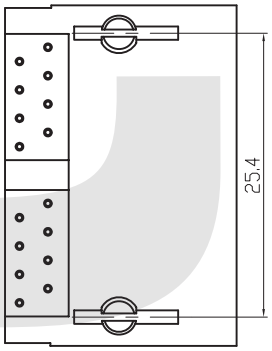

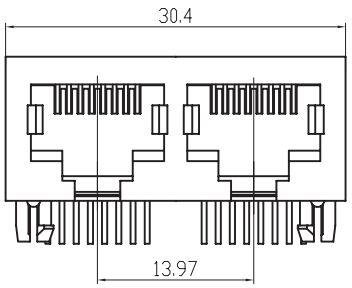

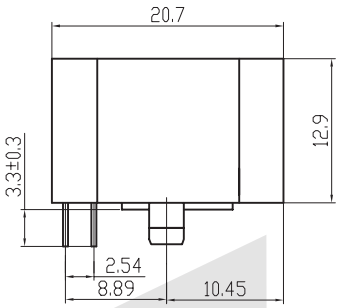

ORDER INFORMATION

KLS12-323 - 8P8C - 1x2-B-XX-X

Part Number	Point NO.	Ports	Part Color	Gold Thickness	Plastic
	8P8C Point	1x2-2 Ports 1x4-4 Ports 1x5-5 Ports 1x6-6 Ports 1x8-8 Ports	1-Black 2-Gray 3-White 4-IV	01-Fu" 02-3u" 03-6u" 04-15u" 05-30u" 06-50u	1-Nylon 2-PBT 3-ABS

PCB Modular Jack Series

KLS12-323-8P PCB Modular Jack 59 Series 1x4 Ports



MATERIAL

1.Housing Material : Glass Filled Polyester UL94V-0 PBT, NYLON
2.Housing Color : Black, Gray, Ivory, White or others
3.Contact Material : Phosphor Bronze Φ0.46mm
4.PLATING: Gold plating over nickel. Gold plating thickness
1.5u″/3u″/6u″/15u″/30u″/50u″

ELECTRICAL

1.Current Rating:1.5Amp
2.Voltage Rating:125VAC
3.Contact Resistance : 30MΩ Max.
4.Insulation Resistance : 500 MΩ Min @500VDC
5.Withstanding Voltage: 1000VAC RMS 50Hz 1 minute

MECHANICAL

1.Durability : 750 cycles Min
2.PCB Retention pre-solder : 1 LB Min

ENVIRONMENTAL

1.Storage :-40ºC~+80ºC
2.Operation:-40ºC~+70ºC

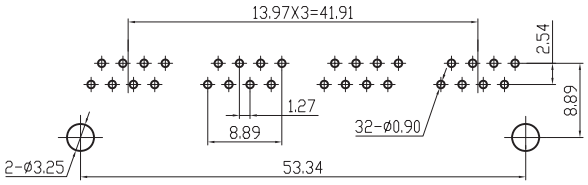

PC Board Layout

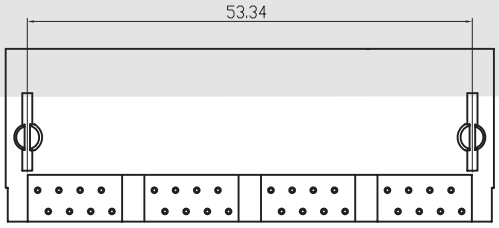

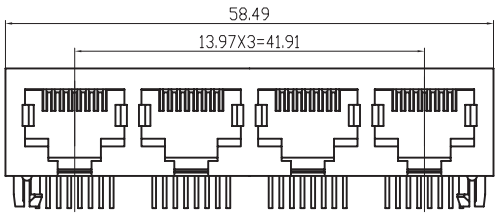

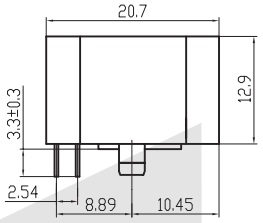

ORDER INFORMATION

KLS12-323 - 8P8C - 1x4-B-XX-X

Part Number	Point NO.	Ports	Part Color	Gold Thickness	Plastic
	8P8C Point	1x2-2 Ports 1x4-4 Ports 1x5-5 Ports 1x6-6 Ports 1x8-8 Ports	1-Black 2-Gray 3-White 4-IV	01-Fu" 02-3u" 03-6u" 04-15u" 05-30u" 06-50u	1-Nylon 2-PBT 3-ABS

PCB Modular Jack Series

KLS12-323-8P PCB Modular Jack 59 Series 1x5 Ports



MATERIAL

1.Housing Material : Glass Filled Polyester UL94V-0 PBT, NYLON
2.Housing Color : Black, Gray, Ivory, White or others
3.Contact Material : Phosphor Bronze Φ0.46mm
4.PLATING: Gold plating over nickel. Gold plating thickness
1.5u″/3u″/6u″/15u″/30u″/50u″

ELECTRICAL

1.Current Rating:1.5Amp
2.Voltage Rating:125VAC
3.Contact Resistance : 30MΩ Max.
4.Insulation Resistance : 500 MΩ Min @500VDC
5.Withstanding Voltage: 1000VAC RMS 50Hz 1 minute

MECHANICAL

1.Durability : 750 cycles Min
2.PCB Retention pre-solder : 1 LB Min

ENVIRONMENTAL

1.Storage :-40ºC~+80ºC
2.Operation:-40ºC~+70ºC

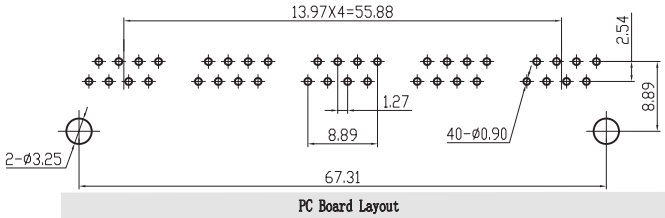

PC Board Layout

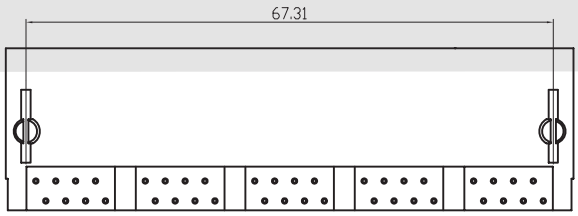

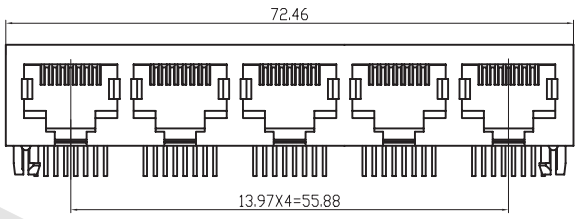

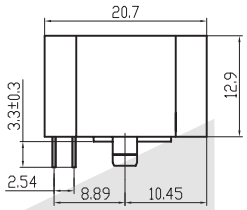

ORDER INFORMATION

KLS12-323 - 8P8C - 1x5-B-XX-X

Part Number	Point NO.	Ports	Part Color	Gold Thickness	Plastic
	8P8C Point	1x2-2 Ports 1x4-4 Ports 1x5-5 Ports 1x6-6 Ports 1x8-8 Ports	1-Black 2-Gray 3-White 4-IV	01-Fu" 02-3u" 03-6u" 04-15u" 05-30u" 06-50u	1-Nylon 2-PBT 3-ABS

PCB Modular Jack Series

KLS12-323-8P PCB Modular Jack 59 Series 1x6 Ports



MATERIAL

1.Housing Material : Glass Filled Polyester UL94V-0 PBT, NYLON
2.Housing Color : Black, Gray, Ivory, White or others
3.Contact Material : Phosphor Bronze Φ0.46mm
4.PLATING: Gold plating over nickel. Gold plating thickness
1.5u″/3u″/6u″/15u″/30u″/50u″

ELECTRICAL

1.Current Rating:1.5Amp
2.Voltage Rating:125VAC
3.Contact Resistance : 30MΩ Max.
4.Insulation Resistance : 500 MΩ Min @500VDC
5.Withstanding Voltage: 1000VAC RMS 50Hz 1 minute

MECHANICAL

1.Durability : 750 cycles Min
2.PCB Retention pre-solder : 1 LB Min

ENVIRONMENTAL

1.Storage :-40ºC~+80ºC
2.Operation:-40ºC~+70ºC

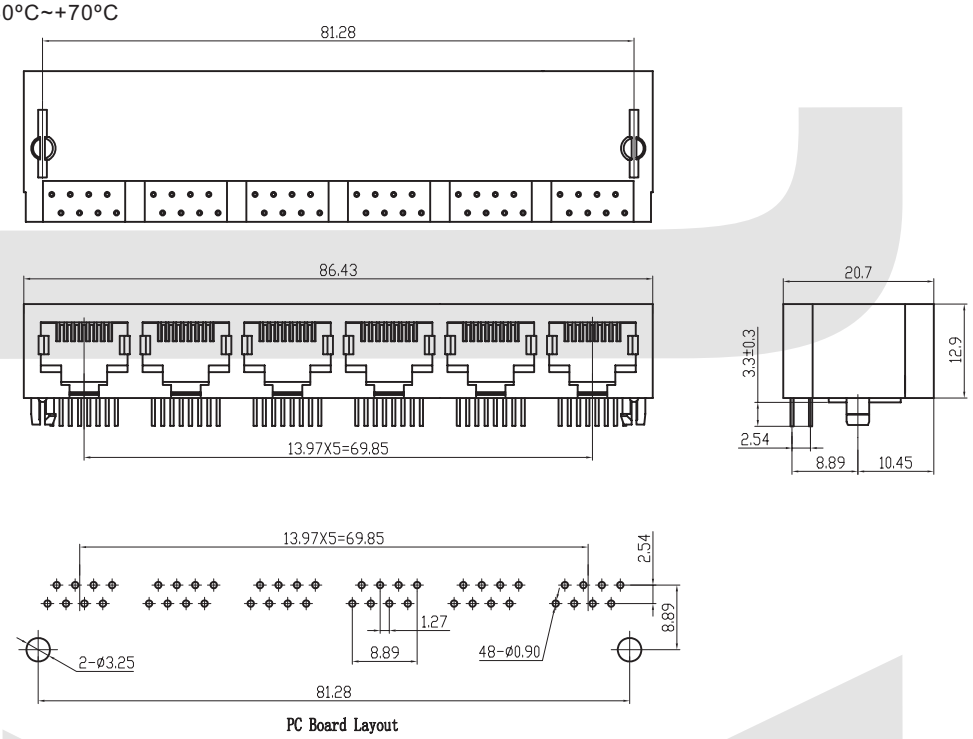

PC Board Layout

ORDER INFORMATION

KLS12-323 - 8P8C - 1x6-B-XX-X

Part Number	Point NO.	Ports	Part Color	Gold Thickness	Plastic
	8P8C Point	1x2-2 Ports 1x4-4 Ports 1x5-5 Ports 1x6-6 Ports 1x8-8 Ports	1-Black 2-Gray 3-White 4-IV	01-Fu" 02-3u" 03-6u" 04-15u" 05-30u" 06-50u	1-Nylon 2-PBT 3-ABS

PCB Modular Jack Series

KLS12-323-8P PCB Modular Jack 59 Series 1x8 Ports



MATERIAL

1.Housing Material : Glass Filled Polyester UL94V-0 PBT, NYLON
2.Housing Color : Black, Gray, Ivory, White or others
3.Contact Material : Phosphor Bronze Φ0.46mm
4.PLATING: Gold plating over nickel. Gold plating thickness
1.5u″/3u″/6u″/15u″/30u″/50u″

ELECTRICAL

1.Current Rating:1.5Amp
2.Voltage Rating:125VAC
3.Contact Resistance : 30MΩ Max.
4.Insulation Resistance : 500 MΩ Min @500VDC
5.Withstanding Voltage: 1000VAC RMS 50Hz 1 minute

MECHANICAL

1.Durability : 750 cycles Min
2.PCB Retention pre-solder : 1 LB Min

ENVIRONMENTAL

1.Storage :-40ºC~+80ºC
2.Operation:-40ºC~+70ºC

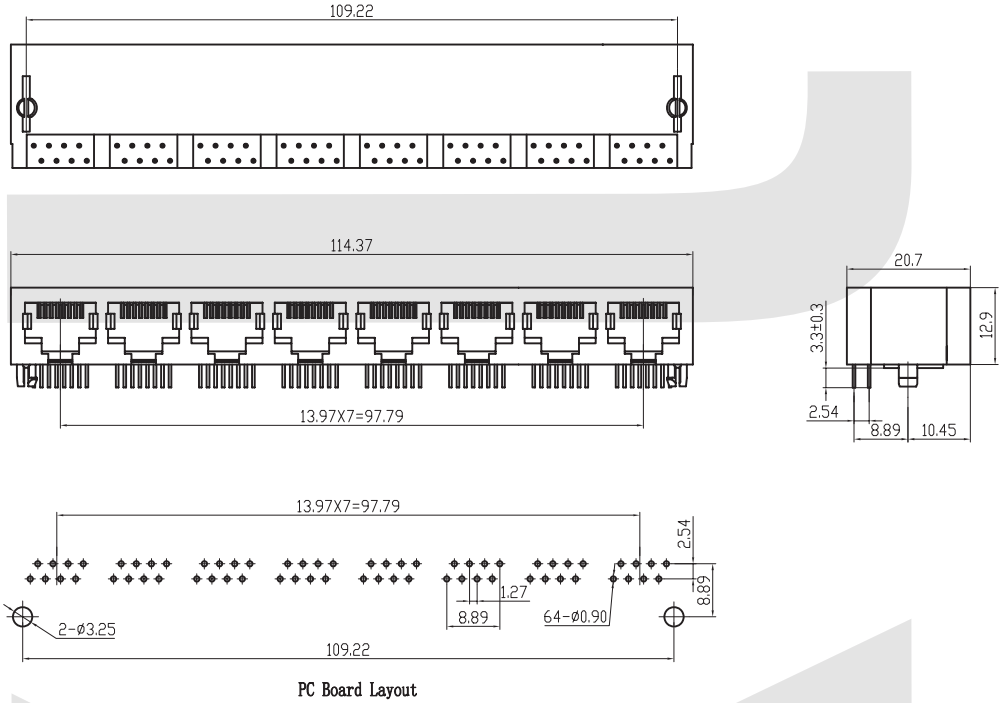

PC Board Layout

ORDER INFORMATION

KLS12-323 - 8P8C - 1x8-B-XX-X

Part Number	Point NO.	Ports	Part Color	Gold Thickness	Plastic
	8P8C Point	1x2-2 Ports 1x4-4 Ports 1x5-5 Ports 1x6-6 Ports 1x8-8 Ports	1-Black 2-Gray 3-White 4-IV	01-Fu" 02-3u" 03-6u" 04-15u" 05-30u" 06-50u	1-Nylon 2-PBT 3-ABS

PCB Modular Jack Series

XII

KLS12-101-8P PCB Modular Jack 59 Series With EMI Shielded 2x1 Ports



MATERIAL

1.Housing Material: Glass Filled Polyester UL94V-0 PBT, NYLON
2.Housing Color: Black, Gray, Ivory, White or others
3.Contact Material: Phosphor Bronze Φ0.46mm
4.Plating: Gold plating over nickel. Gold plating thickness
1.5u "/ 3u" / 6u "/ 15u" / 30u "/ 50u"
5.Shield: 0.23 Thickness Brass with nickel plated

ELECTRICAL

1.Current Rating: 1.5 Amp
2.Voltage Rating: 125VAC
3.Contact Resistance: 30 MΩ Max.
4.Insulation Resistance: 500 MΩ Min. @ 500VDC
5.Withstanding Voltage: 1000VAC RMS 50Hz 1 minute

MECHANICAL

1.Durability : 750 cycles Min.
2.PCB Retention pre-solder : 1 LB MIN

ENVIRONMENTAL

1.Storage :-40°C~+80°C
2.Operation:-40°C~+70°C

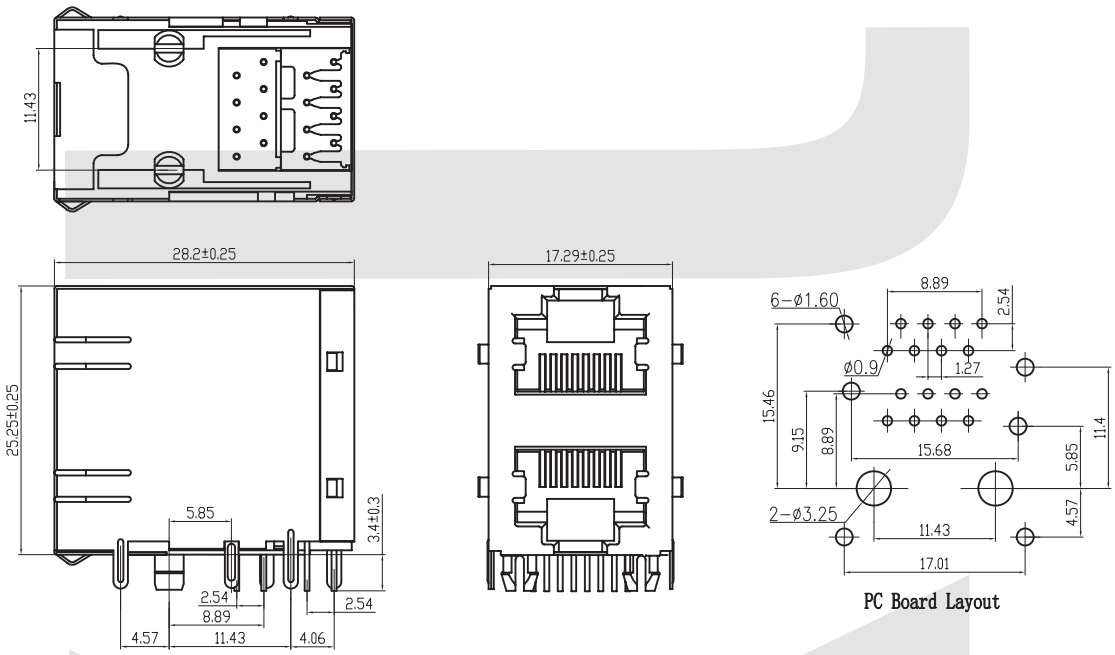

PC Board Layout

ORDER INFORMATION

KLS12-101 -8P8C- W-XX-X

Part Number	Point NO.	Shield	Gold Thickness	Plastic
	8P8C Point	W-With EMI Shielded W/O-Without EMI Shielded	01-Fu" 02-3u" 03-6u" 04-15u" 05-30u" 06-50u	1-Nylon 2-PBT 3-ABS

PCB Modular Jack Series

KLS12-102-8P PCB Modular Jack 59 Series With EMI Shielded 2x2 Ports



MATERIAL

1.Housing Material: Glass Filled Polyester UL94V-0 PBT, NYLON
2.Housing Color: Black, Gray, Ivory, White or others
3.Contact Material: Phosphor Bronze Φ0.46mm
4.Plating: Gold plating over nickel. Gold plating thickness
1.5u "/ 3u" / 6u "/ 15u" / 30u "/ 50u"
5.Shield: 0.23 Thickness Brass with nickel plated

ELECTRICAL

1.Current Rating: 1.5 Amp
2.Voltage Rating: 125VAC
3.Contact Resistance: 30 MΩ Max.
4.Insulation Resistance: 500 MΩ Min. @ 500VDC
5.Withstanding Voltage: 1000VAC RMS 50Hz 1 minute

MECHANICAL

1.Durability : 750 cycles Min.
2.PCB Retention pre-solder : 1 LB MIN

ENVIRONMENTAL

1.Storage :-40°C~+80°C
2.Operation:-40°C~+70°C

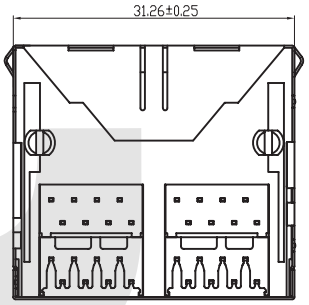

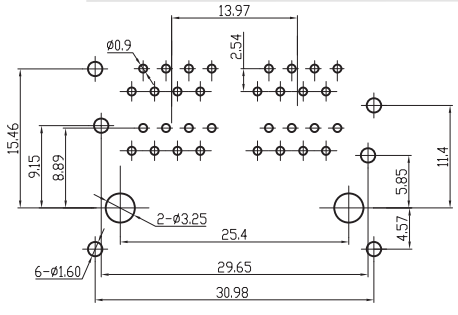

PC Board Layout

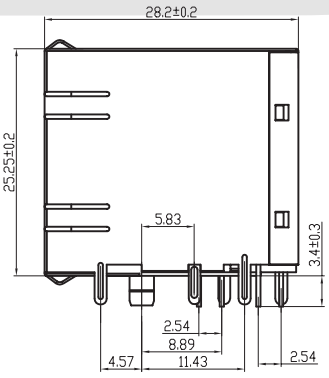

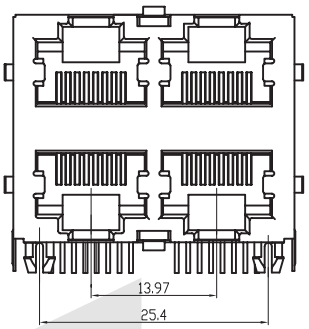

ORDER INFORMATION

KLS12-102 -8P8C- 2x2-W-XX-X

Part Number	Point NO.	Ports	Shield	Gold Thickness	Plastic
	8P8C Point	2x2-4 Ports 2x4-8 Ports 2x6-12 Ports 2x8-16 Ports	W-With EMI Shielded W/O-Without EMI Shielded	01-Fu" 02-3u" 03-6u" 04-15u" 05-30u" 06-50u	1-Nylon 2-PBT 3-ABS

PCB Modular Jack Series

KLS12-102-8P PCB Modular Jack 59 Series With EMI Shielded 2x4 Ports



MATERIAL

1.Housing Material: Glass Filled Polyester UL94V-0 PBT, NYLON
2.Housing Color: Black, Gray, Ivory, White or others
3.Contact Material: Phosphor Bronze Φ0.46mm
4.Plating: Gold plating over nickel. Gold plating thickness
1.5u "/ 3u" / 6u "/ 15u" / 30u "/ 50u"
5.Shield: 0.23 Thickness Brass with nickel plated

ELECTRICAL

1.Current Rating: 1.5 Amp
2.Voltage Rating: 125VAC
3.Contact Resistance: 30 MΩ Max.
4.Insulation Resistance: 500 MΩ Min. @ 500VDC
5.Withstanding Voltage: 1000VAC RMS 50Hz 1 minute

MECHANICAL

1.Durability : 750 cycles Min.
2.PCB Retention pre-solder : 1 LB MIN

ENVIRONMENTAL

1.Storage :-40°C~+80°C
2.Operation:-40°C~+70°C

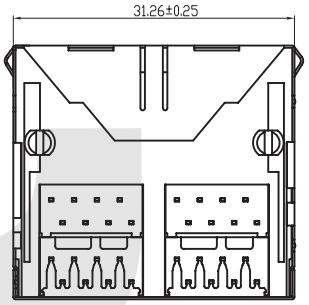

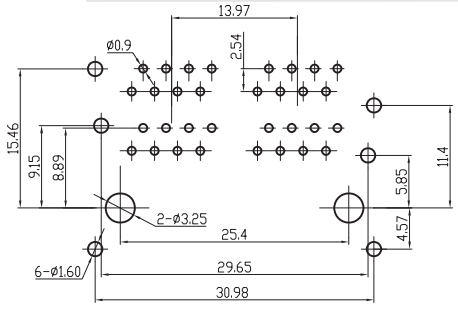

PC Board Layout

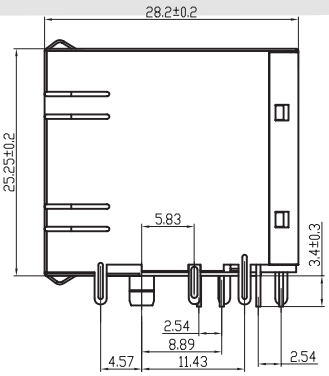

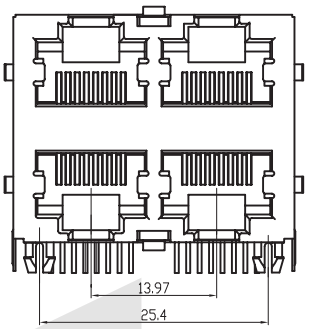

ORDER INFORMATION

KLS12-102 -8P8C- 2x4-W-XX-X

Part Number	Point NO.	Ports	Shield	Gold Thickness	Plastic
	8P8C Point	2x2-4 Ports 2x4-8 Ports 2x6-12 Ports 2x8-16 Ports	W-With EMI Shielded W/O-Without EMI Shielded	01-Fu" 02-3u" 03-6u" 04-15u" 05-30u" 06-50u	1-Nylon 2-PBT 3-ABS

PCB Modular Jack Series

XII

KLS12-102-8P PCB Modular Jack 59 Series With EMI Shielded 2x6 Ports



MATERIAL

1.Housing Material: Glass Filled Polyester UL94V-0 PBT, NYLON
2.Housing Color: Black, Gray, Ivory, White or others
3.Contact Material: Phosphor Bronze Φ0.46mm
4.Plating: Gold plating over nickel. Gold plating thickness
1.5u "/ 3u" / 6u "/ 15u" / 30u "/ 50u"
5.Shield: 0.23 Thickness Brass with nickel plated

ELECTRICAL

1.Current Rating: 1.5 Amp
2.Voltage Rating: 125VAC
3.Contact Resistance: 30 MΩ Max.
4.Insulation Resistance: 500 MΩ Min. @ 500VDC
5.Withstanding Voltage: 1000VAC RMS 50Hz 1 minute

MECHANICAL

1.Durability : 750 cycles Min.
2.PCB Retention pre-solder : 1 LB MIN

ENVIRONMENTAL

1.Storage :-40°C~+80°C
2.Operation:-40°C~+70°C

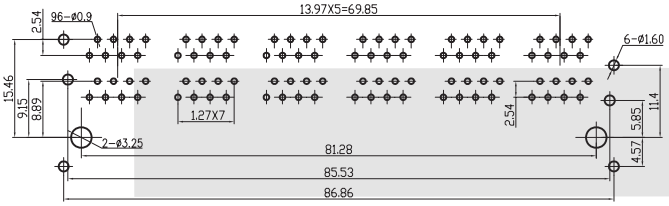

PC Board Layout

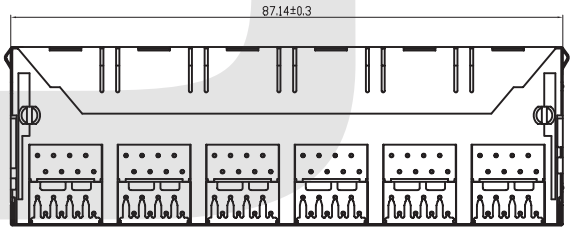

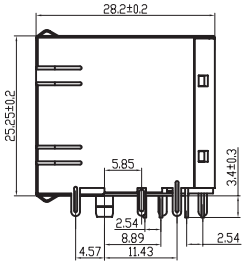

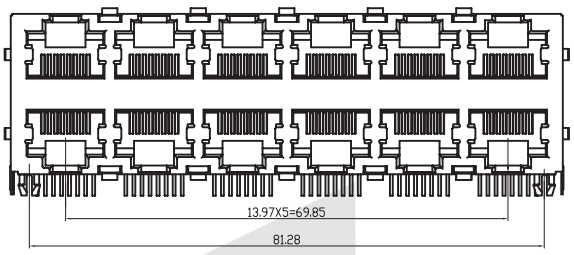

ORDER INFORMATION

KLS12-102 -8P8C- 2x6-W-XX-X

Part Number	Point NO.	Ports	Shield	Gold Thickness	Plastic
	8P8C Point	2x2-4 Ports 2x4-8 Ports 2x6-12 Ports 2x8-16 Ports	W-With EMI Shielded W/O-Without EMI Shielded	01-Fu" 02-3u" 03-6u" 04-15u" 05-30u" 06-50u	1-Nylon 2-PBT 3-ABS

PCB Modular Jack Series

KLS12-102-8P PCB Modular Jack 59 Series With EMI Shielded 2x8 Ports



MATERIAL

1.Housing Material: Glass Filled Polyester UL94V-0 PBT, NYLON
2.Housing Color: Black, Gray, Ivory, White or others
3.Contact Material: Phosphor Bronze Φ0.46mm
4.Plating: Gold plating over nickel. Gold plating thickness
1.5u "/ 3u" / 6u "/ 15u" / 30u "/ 50u"
5.Shield: 0.23 Thickness Brass with nickel plated

ELECTRICAL

1.Current Rating: 1.5 Amp
2.Voltage Rating: 125VAC
3.Contact Resistance: 30 MΩ Max.
4.Insulation Resistance: 500 MΩ Min. @ 500VDC
5.Withstanding Voltage: 1000VAC RMS 50Hz 1 minute

MECHANICAL

1.Durability : 750 cycles Min.
2.PCB Retention pre-solder : 1 LB MIN

ENVIRONMENTAL

1.Storage :-40°C~+80°C
2.Operation:-40°C~+70°C

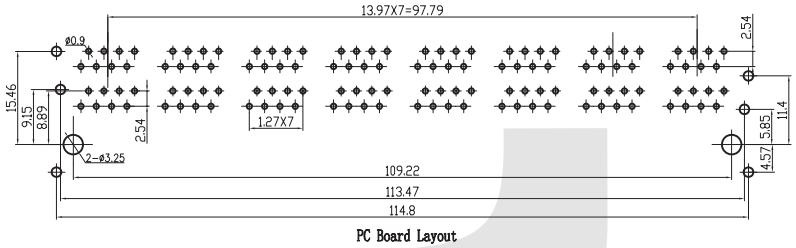

PC Board Layout

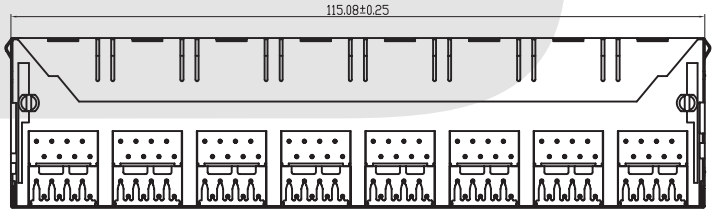

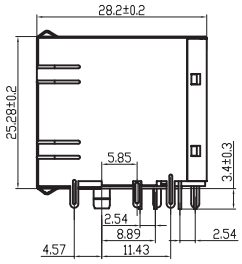

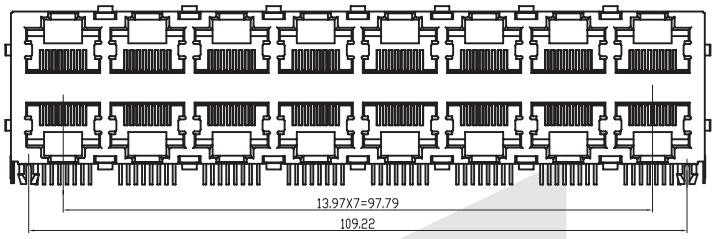

ORDER INFORMATION

KLS12-102 -8P8C- 2x8-W-XX-X

Part Number	Point NO.	Ports	Shield	Gold Thickness	Plastic
	8P8C Point	2x2-4 Ports 2x4-8 Ports 2x6-12 Ports 2x8-16 Ports	W-With EMI Shielded W/O-Without EMI Shielded	01-Fu" 02-3u" 03-6u" 04-15u" 05-30u" 06-50u	1-Nylon 2-PBT 3-ABS

PCB Modular Jack Series

KLS12-107-8P PCB Modular Jack 59 Series

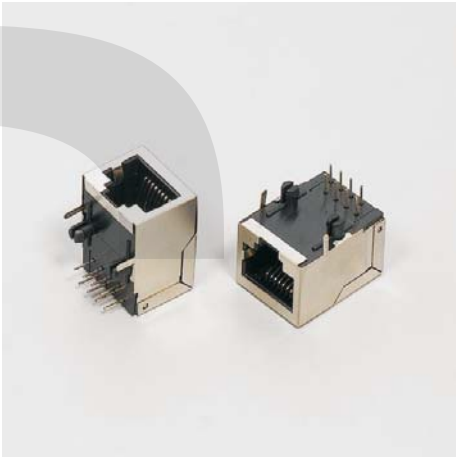

MATERIAL

1.Housing Material: Glass Filled Polyester UL94V-0 PBT, NYLON
2.Housing Color: Black, Gray, Ivory, White or others
3.Contact Material: Phosphor Bronze Φ0.46mm
4.PLATING: Gold plating over nickel. Gold plating thickness
1.5u "/ 3u" / 6u "/ 15u" / 30u "/ 50u"
5.SHIELD: 0.23 Thickness Brass with nickel plated

ELECTRICAL

1.Current Rating: 1.5 Amp
2.Voltage Rating: 125VAC
3.Contact Resistance: 30 MΩ Max.
4.Insulation Resistance: 500 MΩ Min. @ 500VDC
5.Withstanding Voltage: 1000VAC RMS 50Hz 1 minute

MECHANICAL

1.Durability : 750 cycles Min.
2.PCB Retention pre-solder : 1 LB MIN

ENVIRONMENTAL

1.Storage :-40°C~+80°C
2.Operation:-40°C~+70°C

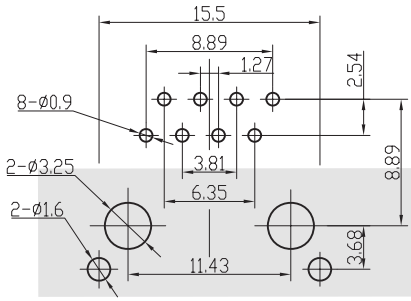

PC Board Layout

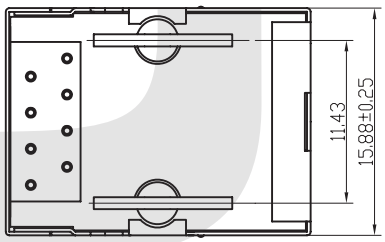

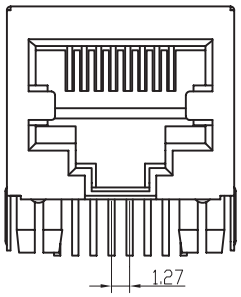

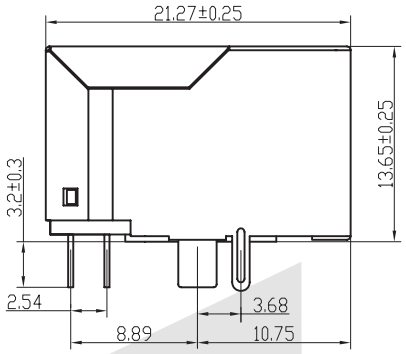

ORDER INFORMATION

KLS12-107 - 8P8C-W- 2 -XX-X

Part Number	Point NO.	Shield	Peg/TAB	Gold Thickness	Plastic
	8P8C Point	W-With Shield E-Shield With EMI	0-W/O Peg 1-Front Peg 3.05 2-Front Peg 3.68 3-Front Peg 4.57 4-Back Peg 3.05	01-Fu" 02-3u" 03-6u" 04-15u" 05-30u" 06-50u	1-Nylon 2-PBT 3-ABS

Wired Jacks Series

KLS12-199 (616E)

MATERIAL

1. Housing :Nylon、PBT or ABS (UL94V-0)
   Color:Black Gray White IV or other color are available
2. Contact Pin
   Round Pin :0.46mm diameter phosphor Bronze gold plating over nickel.
   Plate:3u"/6u"/15u"/30u"/50u"min.Hard gold on top of 100u"nickel plated.
3. Wire Styles :UL1061 26AWG Strands.
   Selective:Non UL Wire

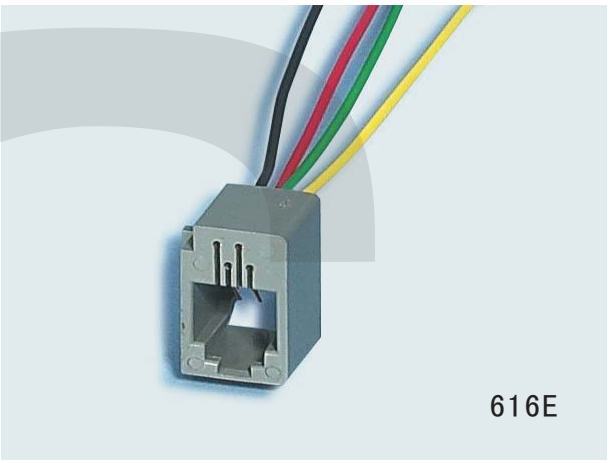

ELECTRICAL SPECIFICATIONS

1. Current Rating:1.5 Amp Max.@25°C.
2. Voltage Rating:125 Volts AC Max.
3. Insulation Resistance:500 Megohms Min.
4. Contact Resistance:30 Megohms Max.
5. Dielectric Withstanding Voltage:1000VAC RMS 50Hz or 60Hz.Per Min.

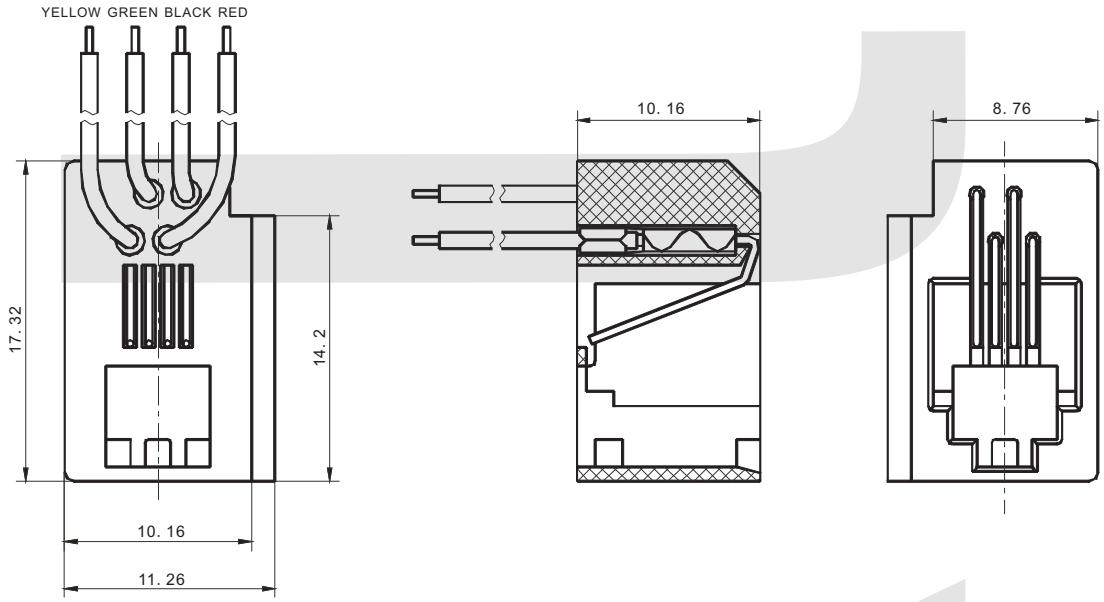

ORDER INFORMATION

KLS12-199 - X XX XX - X X

Part Number

Point NO.	Contact NO.	Gold Thickness	Plastic	Part Color
04-4Point	02-2Contact	01-Fu"	1-Nylon66	1-Black
06-6Point	04-4Contact	02-3u"	2-Nylon46	2-Gray
08-8Point	06-6Contact	03-6u"	3-PBT	3-White
	08-8Contact	04-15u"	4-ABS	4-IV
		05-30u"		
		06-50u		

Wired Jacks Series

KLS12-211-6P （625F Insert）

MATERIAL

1. Housing :Nylon、PBT or ABS (UL94V-0)
   Color:Black Gray White IV or other color are available
2. Contact Pin
   Round Pin :0.46mm diameter phosphor Bronze gold plating over nickel.
   Plate:3u"/6u"/15u"/30u"/50u"min.Hard gold on top of 100u"nickel plated.
3. Wire Styles :UL1061 26AWG Strands.
   Selective:Non UL Wire

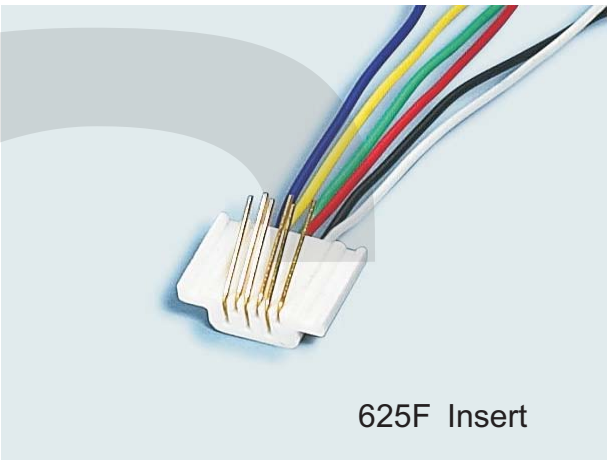

625F Insert

ELECTRICAL SPECIFICATIONS

1. Current Rating:1.5 Amp Max.@25°C.
2. Voltage Rating:125 Volts AC Max.
3. Insulation Resistance:500 Megohms Min.
4. Contact Resistance:30 Megohms Max.
5. Dielectric Withstanding Voltage:1000VAC RMS 50Hz or 60Hz.Per Min.

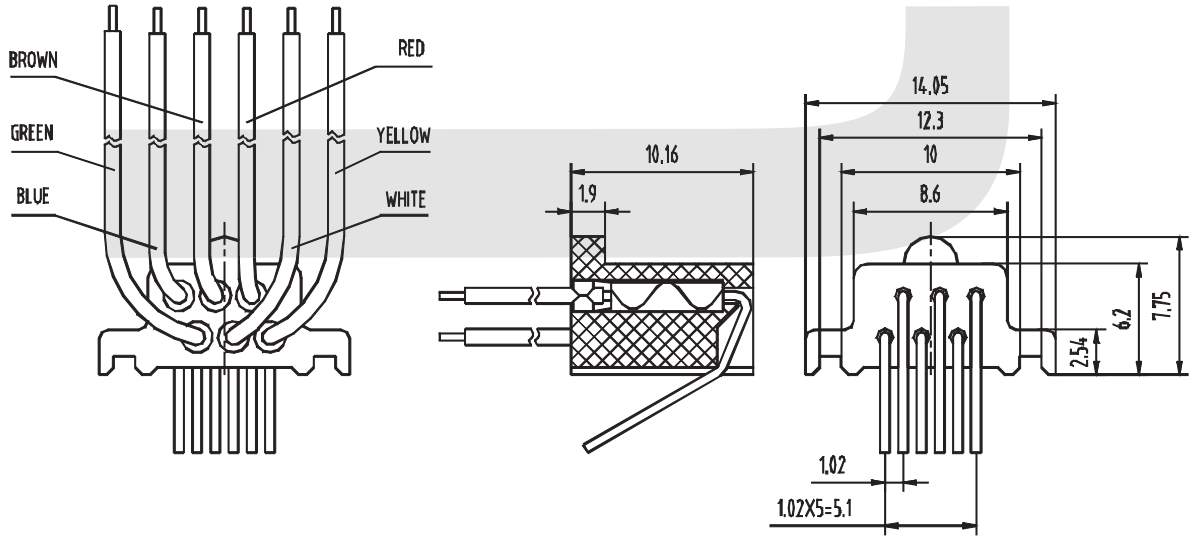

ORDER INFORMATION

KLS12-211 - X XX XX - X X

Part Number

Point NO.	Contact NO.	Gold Thickness	Plastic	Part Color
04-4Point	02-2Contact	01-Fu"	1-Nylon66	1-Black
06-6Point	04-4Contact	02-3u"	2-Nylon46	2-Gray
08-8Point	06-6Contact	03-6u"	3-PBT	3-White
	08-8Contact	04-15u"	4-ABS	4-IV
		05-30u"		
		06-50u		

Wired Jacks Series

KLS12-210 (641D)

MATERIAL

1. Housing :Nylon、PBT or ABS (UL94V-0)
   Color:Black Gray White IV or other color are available
2. Contact Pin
   Round Pin :0.46mm diameter phosphor Bronze gold plating over nickel.
   Plate:3u"/6u"/15u"/30u"/50u"min.Hard gold on top of 100u"nickel plated.
3. Wire Styles :UL1061 26AWG Strands.
   Selective:Non UL Wire

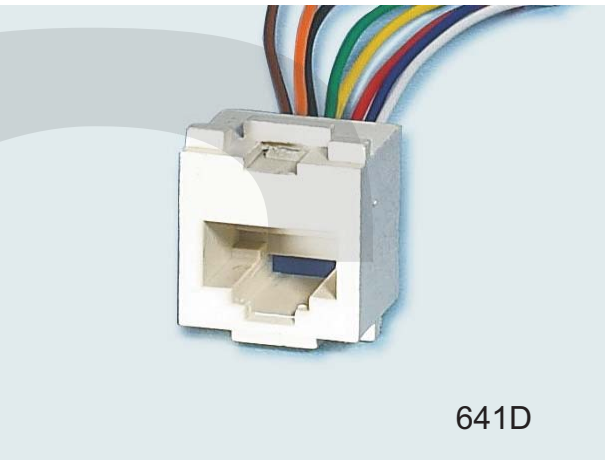

641D

ELECTRICAL SPECIFICATIONS

1. Current Rating:1.5 Amp Max.@25°C.
2. Voltage Rating:125 Volts AC Max.
3. Insulation Resistance:500 Megohms Min.
4. Contact Resistance:30 Megohms Max.
5. Dielectric Withstanding Voltage:1000VAC RMS 50Hz or 60Hz.Per Min.

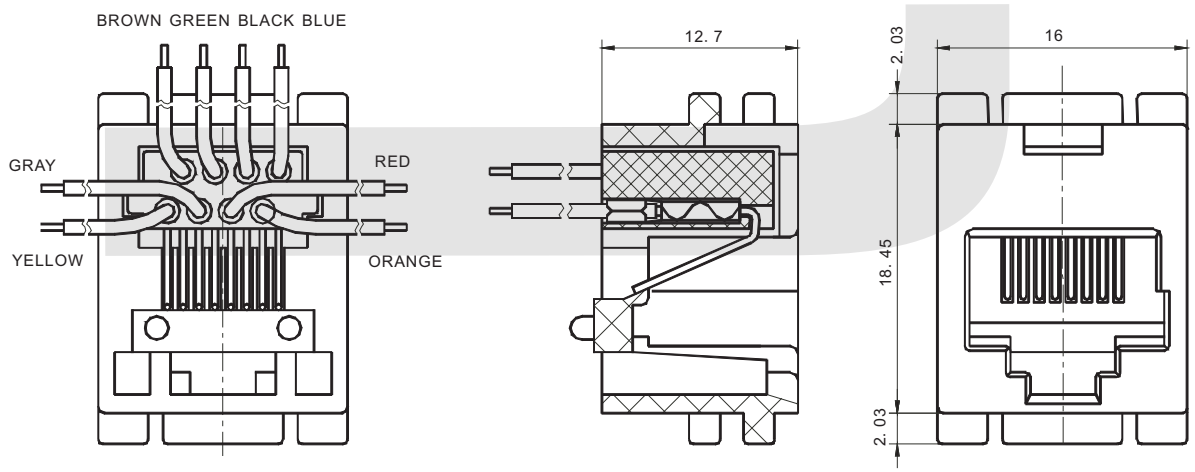

ORDER INFORMATION

KLS12-210 - X XX XX - X X

Part Number

Point NO.	Contact NO.	Gold Thickness	Plastic	Part Color
04-4Point	02-2Contact	01-Fu"	1-Nylon66	1-Black
06-6Point	04-4Contact	02-3u"	2-Nylon46	2-Gray
08-8Point	06-6Contact	03-6u"	3-PBT	3-White
	08-8Contact	04-15u"	4-ABS	4-IV
		05-30u"		
		06-50u		

Wired Jacks Series

KLS12-209 (623P)

MATERIAL

1. Housing :Nylon、PBT or ABS (UL94V-0)
   Color:Black Gray White IV or other color are available
2. Contact Pin
   Round Pin :0.46mm diameter phosphor Bronze gold plating over nickel.
   Plate:3u"/6u"/15u"/30u"/50u"min.Hard gold on top of 100u"nickel plated.
3. Wire Styles :UL1061 26AWG Strands.
   Selective:Non UL Wire

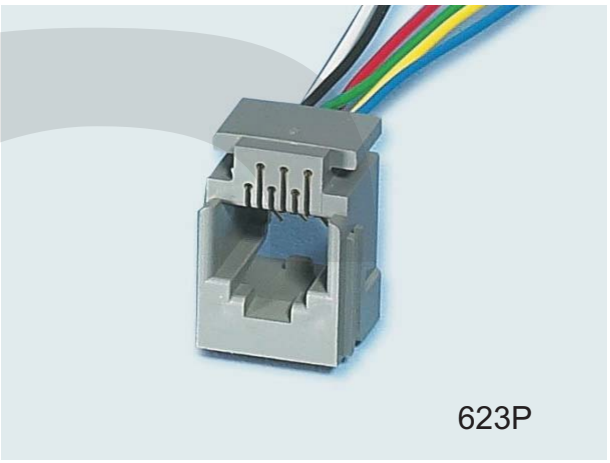

ELECTRICAL SPECIFICATIONS

1. Current Rating:1.5 Amp Max.@25°C.
2. Voltage Rating:125 Volts AC Max.
3. Insulation Resistance:500 Megohms Min.
4. Contact Resistance:30 Megohms Max.
5. Dielectric Withstanding Voltage:1000VAC RMS 50Hz or 60Hz.Per Min.

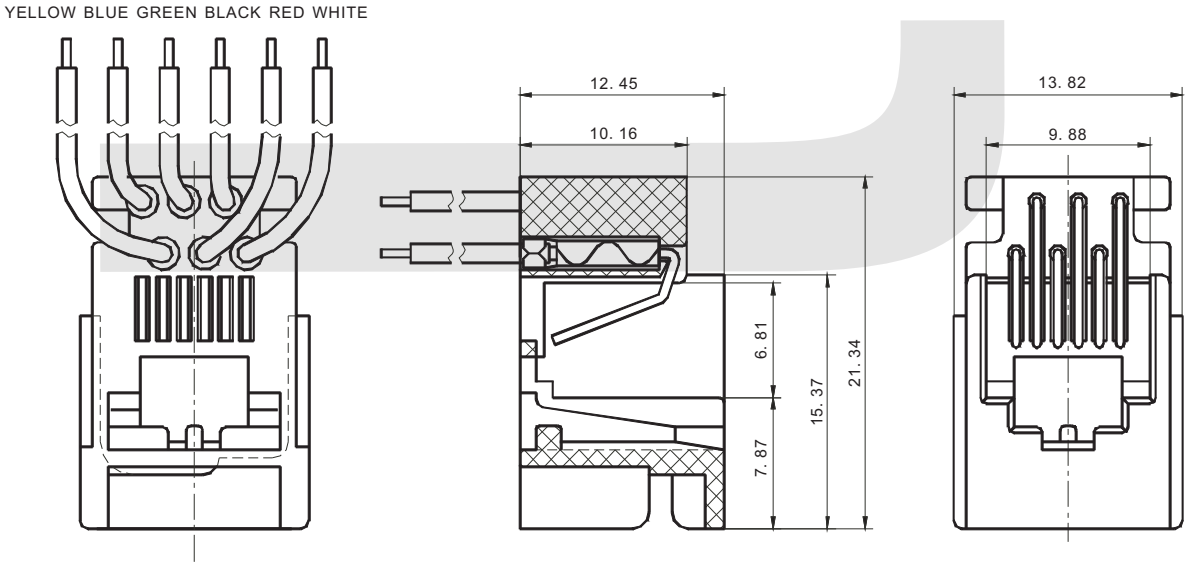

ORDER INFORMATION

KLS12-209 - X XX XX - X X

Part Number

Point NO.	Contact NO.	Gold Thickness	Plastic	Part Color
04-4Point	02-2Contact	01-Fu"	1-Nylon66	1-Black
06-6Point	04-4Contact	02-3u"	2-Nylon46	2-Gray
08-8Point	06-6Contact	03-6u"	3-PBT	3-White
	08-8Contact	04-15u"	4-ABS	4-IV
		05-30u"		
		06-50u		

Wired Jacks Series

KLS12-208 (616P)

MATERIAL

1. Housing :Nylon、PBT or ABS (UL94V-0)
   Color:Black Gray White IV or other color are available
2. Contact Pin
   Round Pin :0.46mm diameter phosphor Bronze gold plating over nickel.
   Plate:3u"/6u"/15u"/30u"/50u"min.Hard gold on top of 100u"nickel plated.
3. Wire Styles :UL1061 26AWG Strands.
   Selective:Non UL Wire

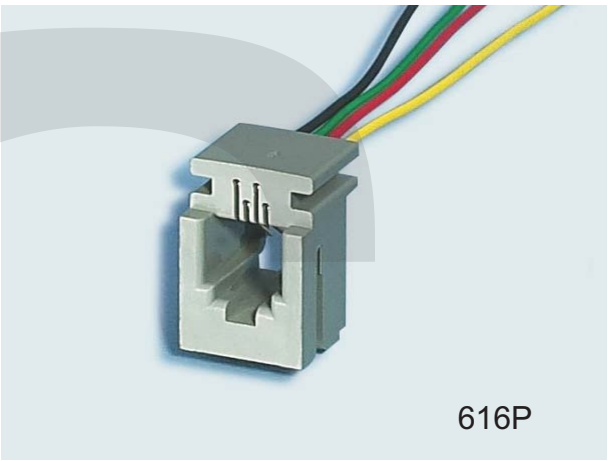

ELECTRICAL SPECIFICATIONS

1. Current Rating:1.5 Amp Max.@25°C.
2. Voltage Rating:125 Volts AC Max.
3. Insulation Resistance:500 Megohms Min.
4. Contact Resistance:30 Megohms Max.
5. Dielectric Withstanding Voltage:1000VAC RMS 50Hz or 60Hz.Per Min.

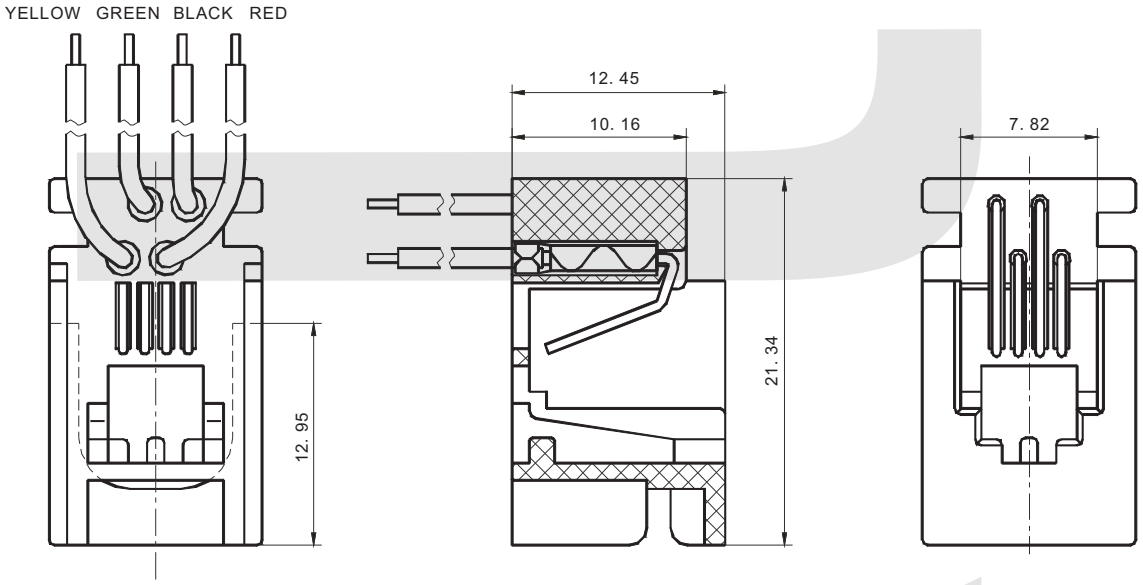

ORDER INFORMATION

KLS12-208 - X XX XX - X X

Part Number

Point NO.	Contact NO.	Gold Thickness	Plastic	Part Color
04-4Point	02-2Contact	01-Fu"	1-Nylon66	1-Black
06-6Point	04-4Contact	02-3u"	2-Nylon46	2-Gray
08-8Point	06-6Contact	03-6u"	3-PBT	3-White
	08-8Contact	04-15u"	4-ABS	4-IV
		05-30u"		
		06-50u		

Wired Jacks Series

KLS12-207 (645 Insert)

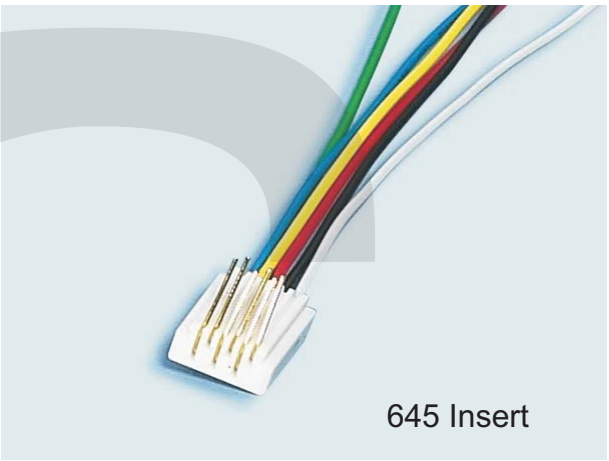

MATERIAL

1. Housing :Nylon、PBT or ABS (UL94V-0)
   Color:Black Gray White IV or other color are available
2. Contact Pin
   Round Pin :0.46mm diameter phosphor Bronze gold plating over nickel.
   Plate:3u"/6u"/15u"/30u"/50u"min.Hard gold on top of 100u"nickel plated.
3. Wire Styles :UL1061 26AWG Strands.
   Selective:Non UL Wire

ELECTRICAL SPECIFICATIONS

1. Current Rating:1.5 Amp Max.@25°C.
2. Voltage Rating:125 Volts AC Max.
3. Insulation Resistance:500 Megohms Min.
4. Contact Resistance:30 Megohms Max.
5. Dielectric Withstanding Voltage:1000VAC RMS 50Hz or 60Hz.Per Min.

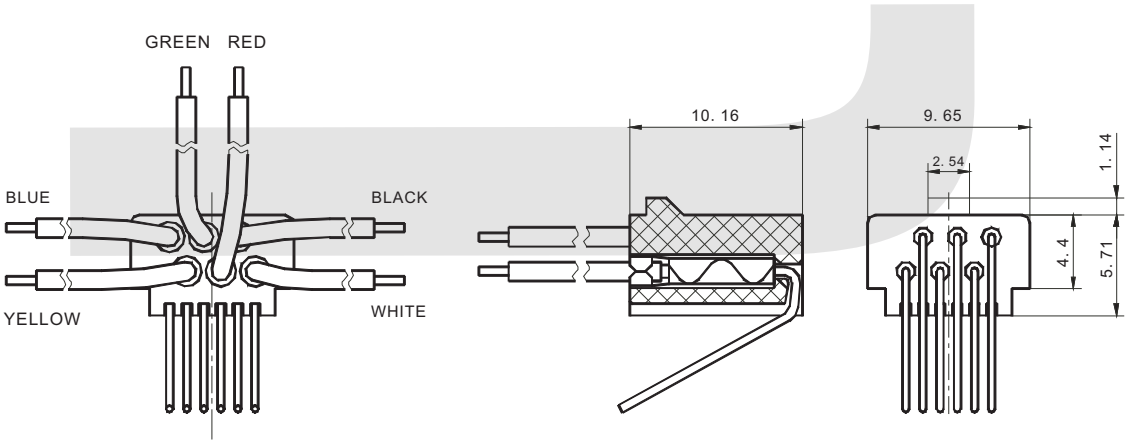

ORDER INFORMATION

KLS12-207 - X XX XX - X X

Part Number

Point NO.	Contact NO.	Gold Thickness	Plastic	Part Color
04-4Point	02-2Contact	01-Fu"	1-Nylon66	1-Black
06-6Point	04-4Contact	02-3u"	2-Nylon46	2-Gray
08-8Point	06-6Contact	03-6u"	3-PBT	3-White
	08-8Contact	04-15u"	4-ABS	4-IV
		05-30u"		
		06-50u		

Wired Jacks Series

KLS12-206 (623MS)

MATERIAL

1. Housing :Nylon、PBT or ABS (UL94V-0)
   Color:Black Gray White IV or other color are available
2. Contact Pin
   Round Pin :0.46mm diameter phosphor Bronze gold plating over nickel.
   Plate:3u"/6u"/15u"/30u"/50u"min.Hard gold on top of 100u"nickel plated.
3. Wire Styles :UL1061 26AWG Strands.
   Selective:Non UL Wire



ELECTRICAL SPECIFICATIONS

1. Current Rating:1.5 Amp Max.@25°C.
2. Voltage Rating:125 Volts AC Max.
3. Insulation Resistance:500 Megohms Min.
4. Contact Resistance:30 Megohms Max.
5. Dielectric Withstanding Voltage:1000VAC RMS 50Hz or 60Hz.Per Min.

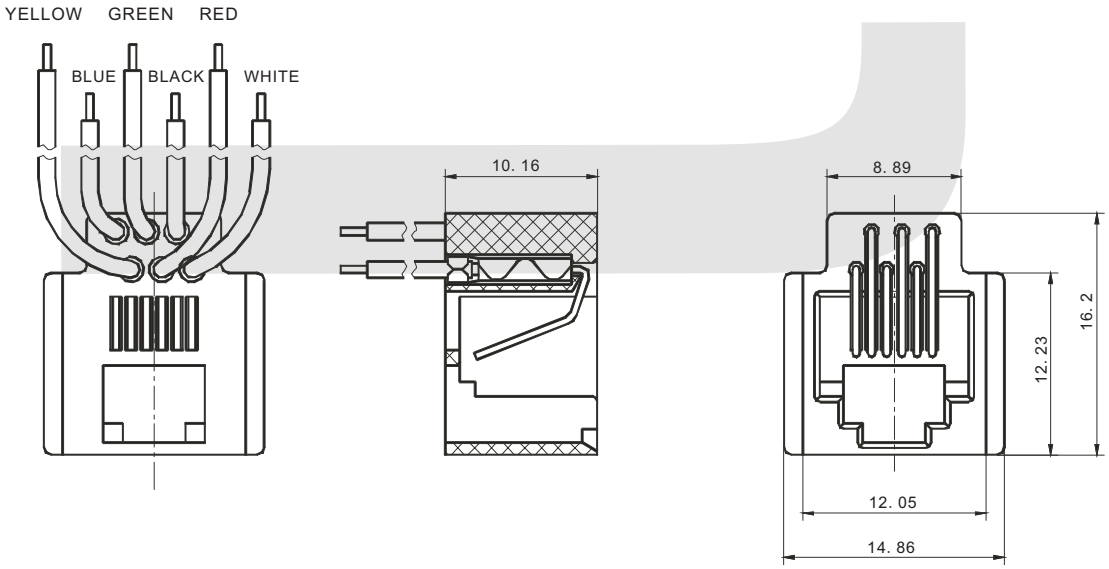

ORDER INFORMATION

KLS12-206 - X XX XX - X X

Part Number

Point NO.	Contact NO.	Gold Thickness	Plastic	Part Color
04-4Point	02-2Contact	01-Fu"	1-Nylon66	1-Black
06-6Point	04-4Contact	02-3u"	2-Nylon46	2-Gray
08-8Point	06-6Contact	03-6u"	3-PBT	3-White
	08-8Contact	04-15u"	4-ABS	4-IV
		05-30u"		
		06-50u		

Wired Jacks Series

KLS12-205 (616MS)

MATERIAL

1. Housing :Nylon、PBT or ABS (UL94V-0)
   Color:Black Gray White IV or other color are available
2. Contact Pin
   Round Pin :0.46mm diameter phosphor Bronze gold plating over nickel.
   Plate:3u"/6u"/15u"/30u"/50u"min.Hard gold on top of 100u"nickel plated.
3. Wire Styles :UL1061 26AWG Strands.
   Selective:Non UL Wire

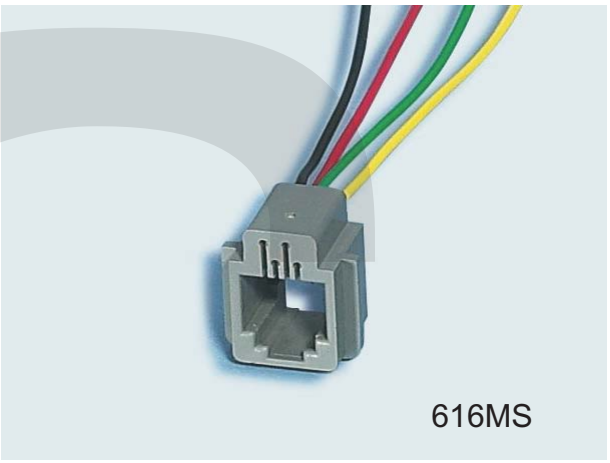

ELECTRICAL SPECIFICATIONS

1. Current Rating:1.5 Amp Max.@25°C.
2. Voltage Rating:125 Volts AC Max.
3. Insulation Resistance:500 Megohms Min.
4. Contact Resistance:30 Megohms Max.
5. Dielectric Withstanding Voltage:1000VAC RMS 50Hz or 60Hz.Per Min.

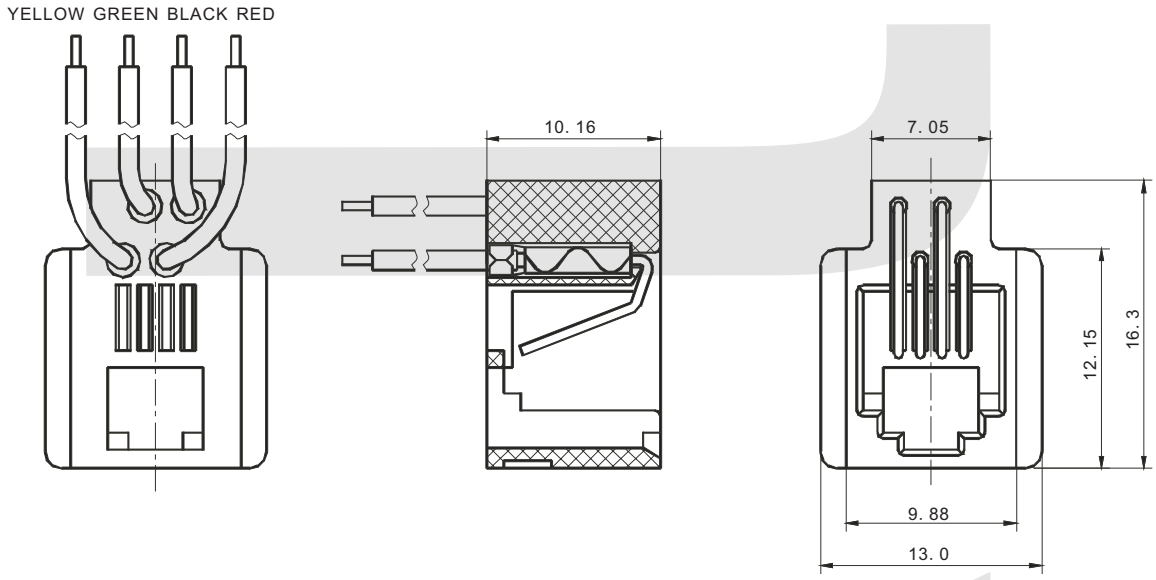

ORDER INFORMATION

KLS12-205 - X XX XX - X X

Part Number

Point NO.	Contact NO.	Gold Thickness	Plastic	Part Color
04-4Point	02-2Contact	01-Fu"	1-Nylon66	1-Black
06-6Point	04-4Contact	02-3u"	2-Nylon46	2-Gray
08-8Point	06-6Contact	03-6u"	3-PBT	3-White
	08-8Contact	04-15u"	4-ABS	4-IV
		05-30u"		
		06-50u		

Wired Jacks Series

KLS12-204 (616M)

MATERIAL

1. Housing :Nylon、PBT or ABS (UL94V-0)
   Color:Black Gray White IV or other color are available
2. Contact Pin
   Round Pin :0.46mm diameter phosphor Bronze gold plating over nickel.
   Plate:3u"/6u"/15u"/30u"/50u"min.Hard gold on top of 100u"nickel plated.
3. Wire Styles :UL1061 26AWG Strands.
   Selective:Non UL Wire

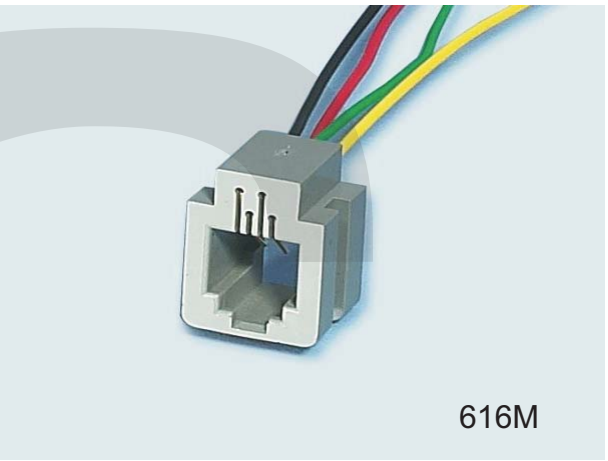

ELECTRICAL SPECIFICATIONS

1. Current Rating:1.5 Amp Max.@25°C.
2. Voltage Rating:125 Volts AC Max.
3. Insulation Resistance:500 Megohms Min.
4. Contact Resistance:30 Megohms Max.
5. Dielectric Withstanding Voltage:1000VAC RMS 50Hz or 60Hz.Per Min.

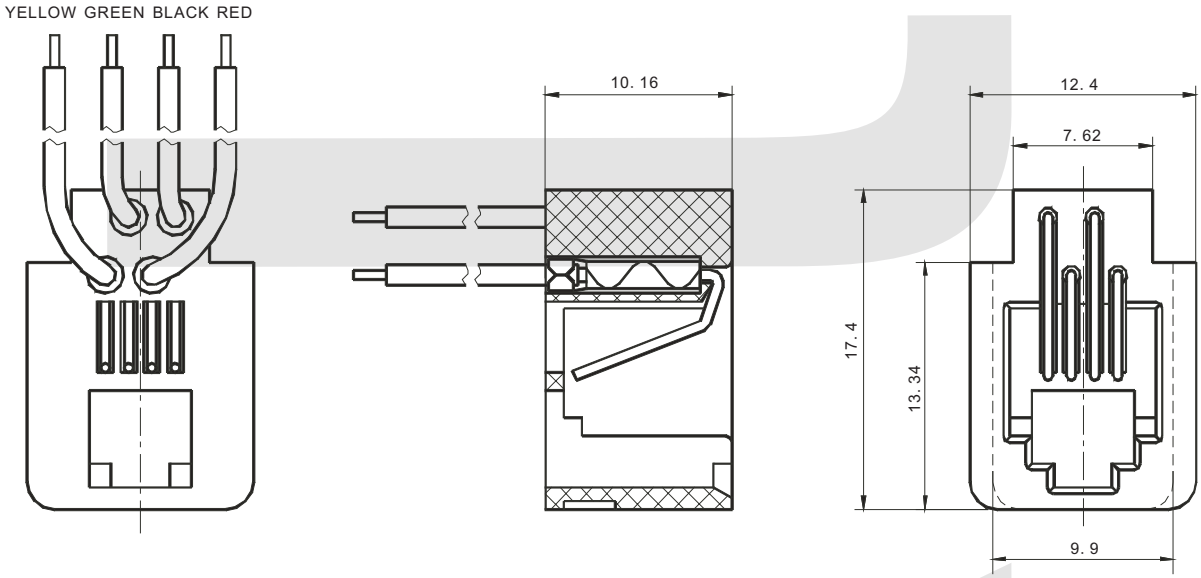

ORDER INFORMATION

KLS12-204 - X XX XX - X X

Part Number

Point NO.	Contact NO.	Gold Thickness	Plastic	Part Color
04-4Point	02-2Contact	01-Fu"	1-Nylon66	1-Black
06-6Point	04-4Contact	02-3u"	2-Nylon46	2-Gray
08-8Point	06-6Contact	03-6u"	3-PBT	3-White
	08-8Contact	04-15u"	4-ABS	4-IV
		05-30u"		
		06-50u		

Wired Jacks Series

KLS12-203 (616L)

MATERIAL

1. Housing :Nylon、PBT or ABS (UL94V-0)
   Color:Black Gray White IV or other color are available
2. Contact Pin
   Round Pin :0.46mm diameter phosphor Bronze gold plating over nickel.
   Plate:3u"/6u"/15u"/30u"/50u"min.Hard gold on top of 100u"nickel plated.
3. Wire Styles :UL1061 26AWG Strands.
   Selective:Non UL Wire

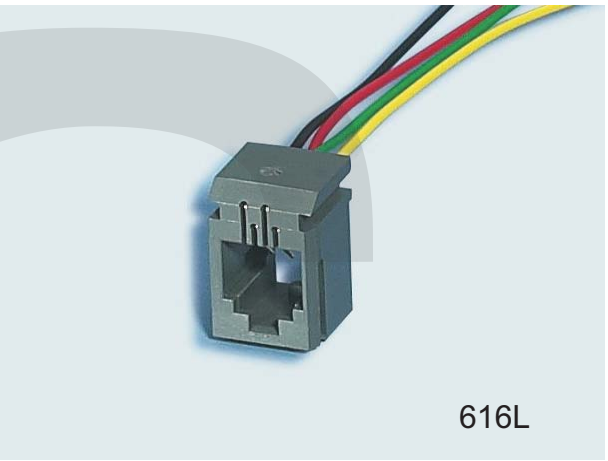

616L

ELECTRICAL SPECIFICATIONS

1. Current Rating:1.5 Amp Max.@25°C.
2. Voltage Rating:125 Volts AC Max.
3. Insulation Resistance:500 Megohms Min.
4. Contact Resistance:30 Megohms Max.
5. Dielectric Withstanding Voltage:1000VAC RMS 50Hz or 60Hz.Per Min.

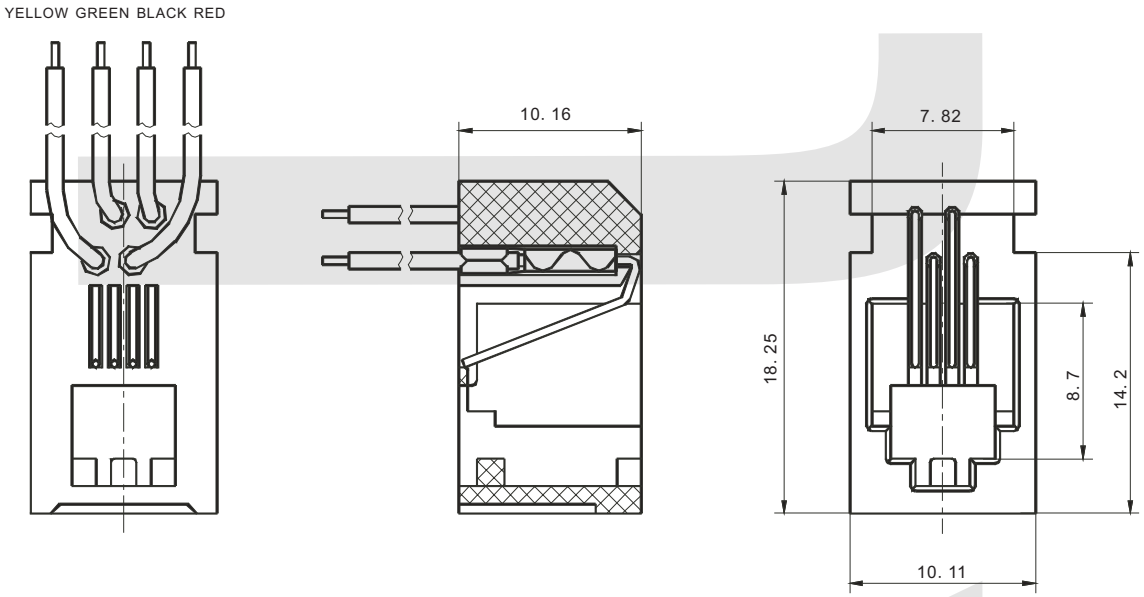

ORDER INFORMATION

KLS12-203 - X XX XX - X X

Part Number

Point NO.	Contact NO.	Gold Thickness	Plastic	Part Color
04-4Point	02-2Contact	01-Fu"	1-Nylon66	1-Black
06-6Point	04-4Contact	02-3u"	2-Nylon46	2-Gray
08-8Point	06-6Contact	03-6u"	3-PBT	3-White
	08-8Contact	04-15u"	4-ABS	4-IV
		05-30u"		
		06-50u		

Wired Jacks Series

KLS12-202 (623K With Insert)

MATERIAL

1. Housing :Nylon、PBT or ABS (UL94V-0)
   Color:Black Gray White IV or other color are available
2. Contact Pin
   Round Pin :0.46mm diameter phosphor Bronze gold plating over nickel.
   Plate:3u"/6u"/15u"/30u"/50u"min.Hard gold on top of 100u"nickel plated.
3. Wire Styles :UL1061 26AWG Strands.
   Selective:Non UL Wire



623K With Insert

ELECTRICAL SPECIFICATIONS

1. Current Rating:1.5 Amp Max.@25°C.
2. Voltage Rating:125 Volts AC Max.
3. Insulation Resistance:500 Megohms Min.
4. Contact Resistance:30 Megohms Max.
5. Dielectric Withstanding Voltage:1000VAC RMS 50Hz or 60Hz.Per Min.

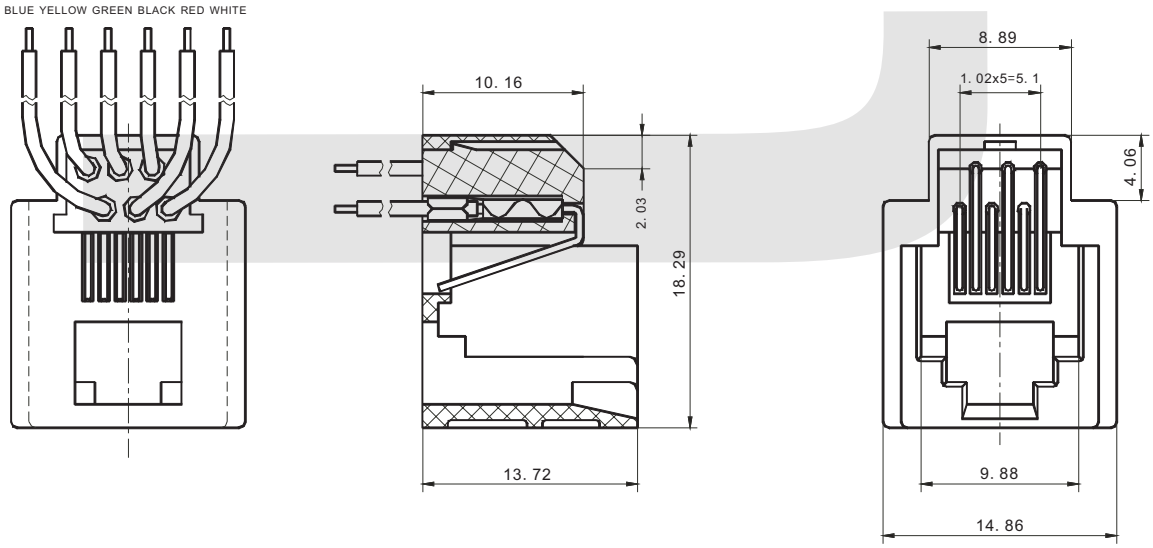

ORDER INFORMATION

KLS12-202 - X XX XX - X X

Part Number

Point NO.	Contact NO.	Gold Thickness	Plastic	Part Color
04-4Point	02-2Contact	01-Fu"	1-Nylon66	1-Black
06-6Point	04-4Contact	02-3u"	2-Nylon46	2-Gray
08-8Point	06-6Contact	03-6u"	3-PBT	3-White
	08-8Contact	04-15u"	4-ABS	4-IV
		05-30u"		
		06-50u		

Wired Jacks Series

KLS12-201(623K)

MATERIAL

1. Housing :Nylon、PBT or ABS (UL94V-0)
   Color:Black Gray White IV or other color are available
2. Contact Pin
   Round Pin :0.46mm diameter phosphor Bronze gold plating over nickel.
   Plate:3u"/6u"/15u"/30u"/50u"min.Hard gold on top of 100u"nickel plated.
3. Wire Styles :UL1061 26AWG Strands.
   Selective:Non UL Wire



ELECTRICAL SPECIFICATIONS

1. Current Rating:1.5 Amp Max.@25°C.
2. Voltage Rating:125 Volts AC Max.
3. Insulation Resistance:500 Megohms Min.
4. Contact Resistance:30 Megohms Max.
5. Dielectric Withstanding Voltage:1000VAC RMS 50Hz or 60Hz.Per Min.

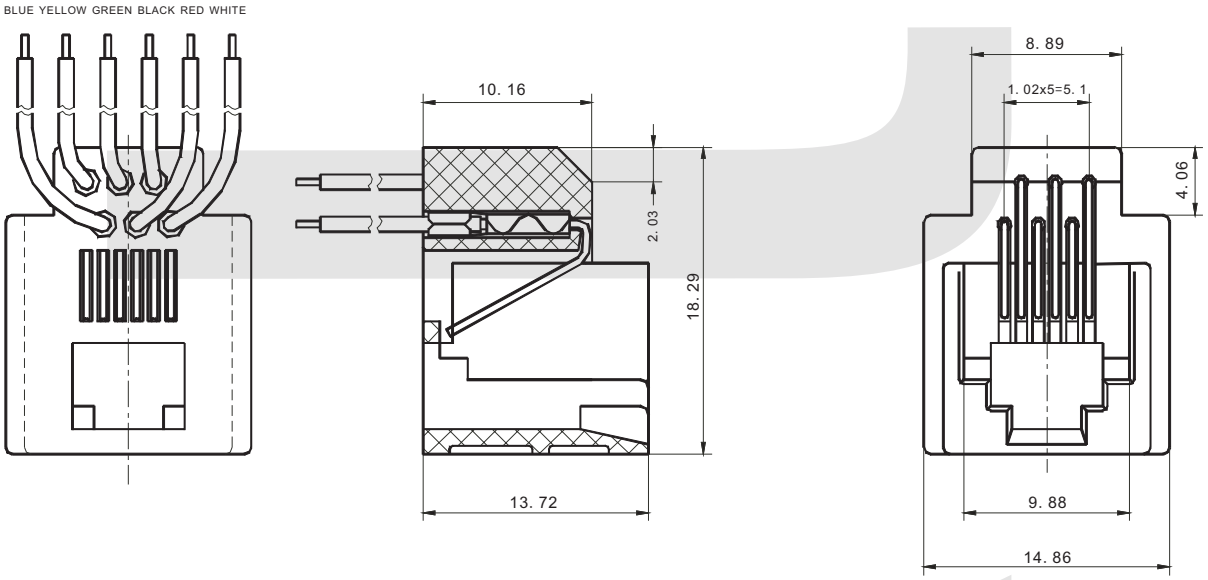

ORDER INFORMATION

KLS12-201 - X XX XX - X X

Part Number

Point NO.	Contact NO.	Gold Thickness	Plastic	Part Color
04-4Point	02-2Contact	01-Fu"	1-Nylon66	1-Black
06-6Point	04-4Contact	02-3u"	2-Nylon46	2-Gray
08-8Point	06-6Contact	03-6u"	3-PBT	3-White
	08-8Contact	04-15u"	4-ABS	4-IV
		05-30u"		
		06-50u		

Wired Jacks Series

KLS12-200 (616W)

MATERIAL

1. Housing :Nylon、PBT or ABS (UL94V-0)
   Color:Black Gray White IV or other color are available
2. Contact Pin
   Round Pin :0.46mm diameter phosphor Bronze gold plating over nickel.
   Plate:3u"/6u"/15u"/30u"/50u"min.Hard gold on top of 100u"nickel plated.
3. Wire Styles :UL1061 26AWG Strands.
   Selective:Non UL Wire

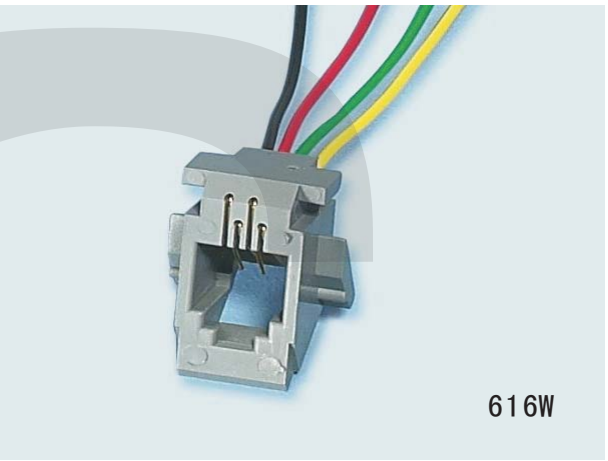

ELECTRICAL SPECIFICATIONS

1. Current Rating:1.5 Amp Max.@25°C.
2. Voltage Rating:125 Volts AC Max.
3. Insulation Resistance:500 Megohms Min.
4. Contact Resistance:30 Megohms Max.
5. Dielectric Withstanding Voltage:1000VAC RMS 50Hz or 60Hz.Per Min.

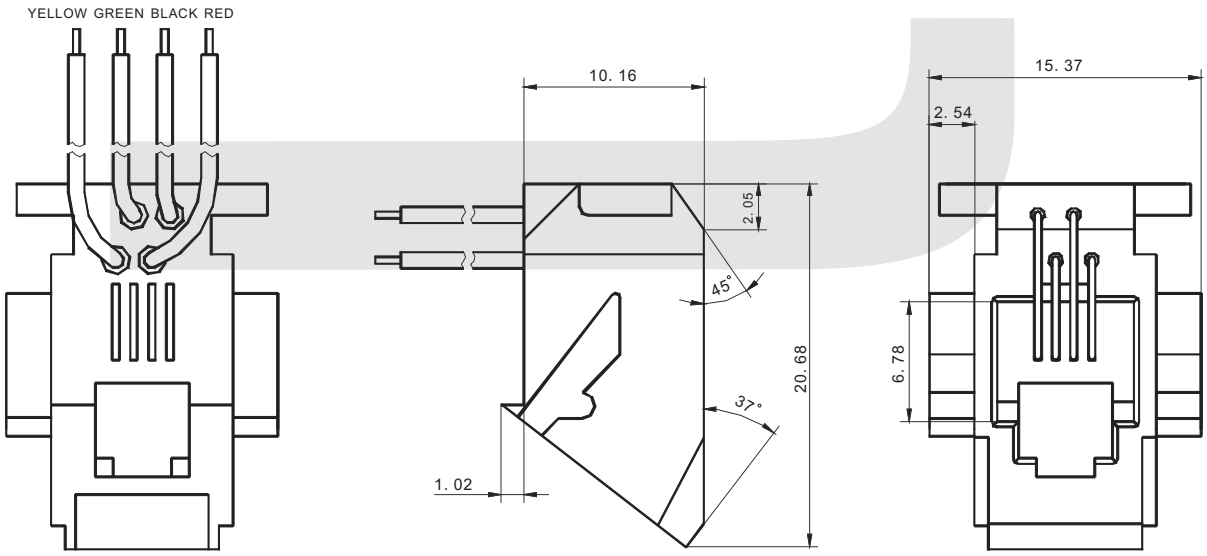

ORDER INFORMATION

KLS12-200 - X XX XX - X X

Part Number

Point NO.	Contact NO.	Gold Thickness	Plastic	Part Color
04-4Point	02-2Contact	01-Fu"	1-Nylon66	1-Black
06-6Point	04-4Contact	02-3u"	2-Nylon46	2-Gray
08-8Point	06-6Contact	03-6u"	3-PBT	3-White
	08-8Contact	04-15u"	4-ABS	4-IV
		05-30u"		
		06-50u		

Wired Jacks Series

KLS12-212-8P （625E Insert）

MATERIAL

1. Housing :Nylon、PBT or ABS (UL94V-0)
   Color:Black Gray White IV or other color are available
2. Contact Pin
   Round Pin :0.46mm diameter phosphor Bronze gold plating over nickel.
   Plate:3u"/6u"/15u"/30u"/50u"min.Hard gold on top of 100u"nickel plated.
3. Wire Styles :UL1061 26AWG Strands.
   Selective:Non UL Wire



625E Insert

ELECTRICAL SPECIFICATIONS

1. Current Rating:1.5 Amp Max.@25°C.
2. Voltage Rating:125 Volts AC Max.
3. Insulation Resistance:500 Megohms Min.
4. Contact Resistance:30 Megohms Max.
5. Dielectric Withstanding Voltage:1000VAC RMS 50Hz or 60Hz.Per Min.

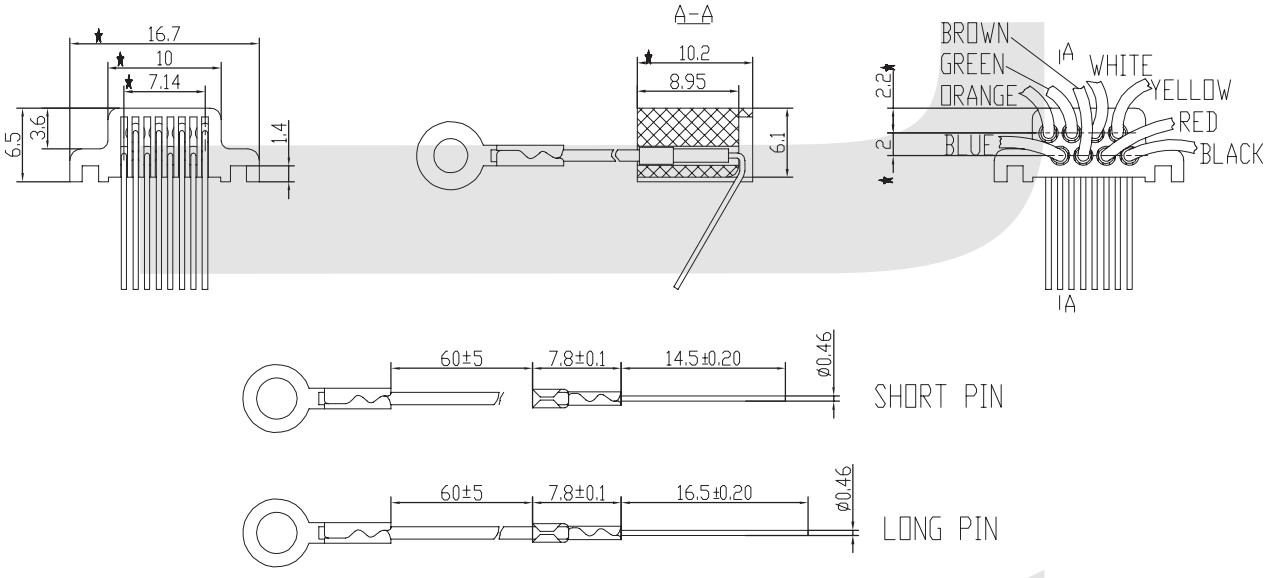

ORDER INFORMATION

KLS12-212 - X XX XX - X X

Part Number

Point NO.	Contact NO.	Gold Thickness	Plastic	Part Color
04-4Point	02-2Contact	01-Fu"	1-Nylon66	1-Black
06-6Point	04-4Contact	02-3u"	2-Nylon46	2-Gray
08-8Point	06-6Contact	03-6u"	3-PBT	3-White
	08-8Contact	04-15u"	4-ABS	4-IV
		05-30u"		
		06-50u		

Modular Jack With LED Series

KLS12-108-8P Modular Jack With LED 56 Series 1x1 Ports

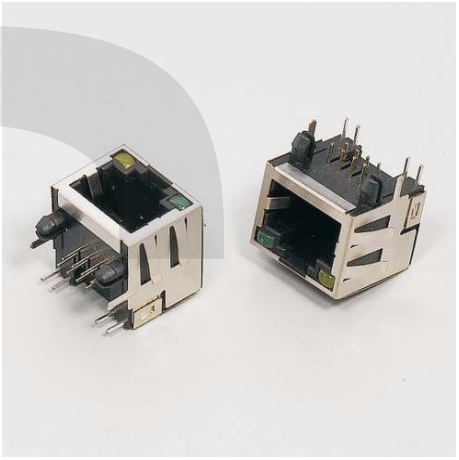

MATERIAL

1.Housing Material: Glass Filled Plyester UL94V-0 PBT, Nylon
2.Housing Color: Black or others
3.Contact Material: Phosphor Bronze Φ0.46mm
4.Plating: Gold plating over nickel. Gold plating thickness
1.5u "/ 3u" / 6u "/ 15u" / 30u "/ 50u"
5.Shield: 0.23 Thickness Brass with nickel plated

ELECTRICAL

1.Current Rating: 1.5 Amp
2.Voltage Rating: 125VAC
3.Contact Resistance: 30 MΩ Max.
4.Insulation Resistance: 500 MΩ Min. @ 500 VDC
5.Withstanding Voltage: 1000VAC RMS 50Hz 1 minute

MECHANICAL

1.Durability: 750 cycles Min.
2.PCB Retention pre-solder: 1 LB Min.

ENVIRONMENTAL

1.Storage: -40°C ~ +80°C
2.Operation: -40°C ~ +70°C

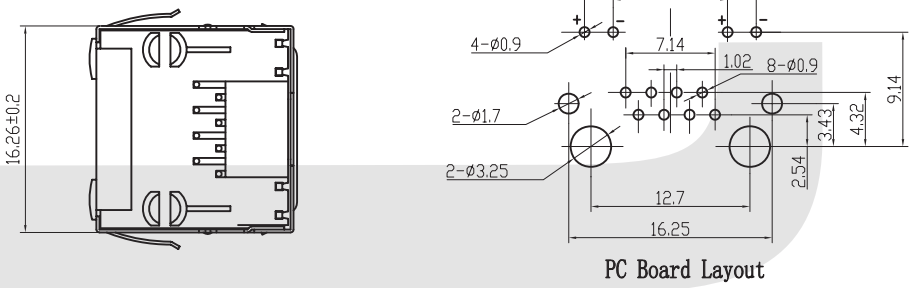

PC Board Layout

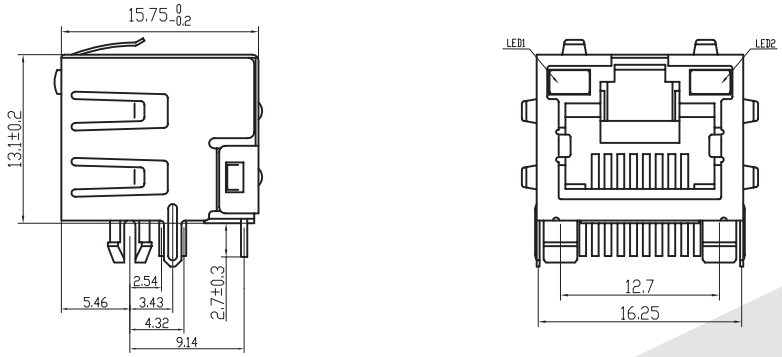

ORDER INFORMATION

KLS12-108 - 8P8C - 1x1 - 2 - G/Y - 0 - XX - X

Part Number	Point No.	Ports	Shielded	LED Style	Back Peg	Gold Plating	Plastic
	8P8C Point	1x1-1 Ports 1x2-2 Ports 1x4-4 Ports 1x6-6 Ports 1x8-8 Ports	1-With Shielded 2-EMI Shielded 3-Top EMI Shielded	G/Y-Green / Yellow Y/G-Yellow / Green R/G-Red / Green G/R-Green / Red G/G-Green / Green Y/Y -Yellow / Yellow 0-Without LED	0-Without Back Peg 1-1 Back Peg 2-2 Back Peg	01-Fu" 02-3u" 03-6u" 04-15u" 05-30u" 06-50u	1-Nylon66 2-Nylon46 3-PBT

Modular Jack With LED Series

KLS12-108-8P Modular Jack With LED 56 Series 1x1 Ports

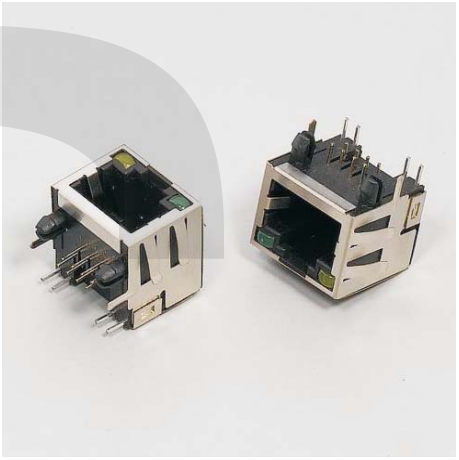

MATERIAL

1.Housing Material: Glass Filled Plyester UL94V-0 PBT, Nylon
2.Housing Color: Black or others
3.Contact Material: Phosphor Bronze Φ0.46mm
4.Plating: Gold plating over nickel. Gold plating thickness
1.5u "/ 3u" / 6u "/ 15u" / 30u "/ 50u"
5.Shield: 0.23 Thickness Brass with nickel plated

ELECTRICAL

1.Current Rating: 1.5 Amp
2.Voltage Rating: 125VAC
3.Contact Resistance: 30 MΩ Max.
4.Insulation Resistance: 500 MΩ Min. @ 500 VDC
5.Withstanding Voltage: 1000VAC RMS 50Hz 1 minute

MECHANICAL

1.Durability: 750 cycles Min.
2.PCB Retention pre-solder: 1 LB Min.

ENVIRONMENTAL

1.Storage: -40°C ~ +80°C
2.Operation: -40°C ~ +70°C

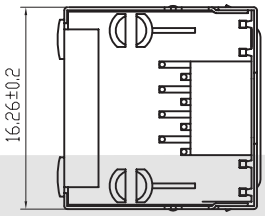

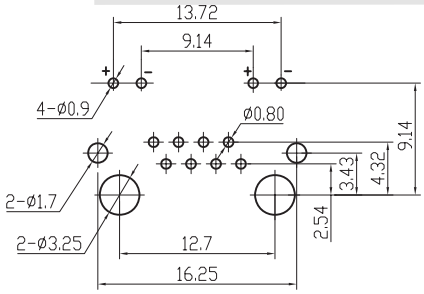

PC Board Layout

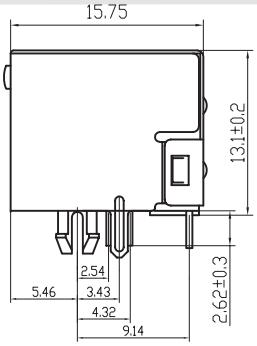

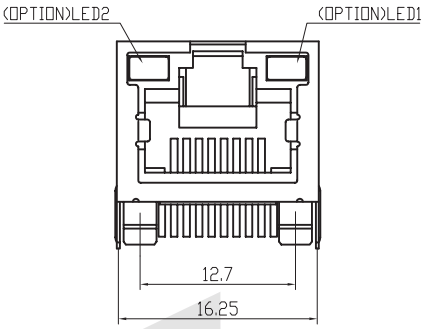

ORDER INFORMATION

KLS12-108 - 8P8C - 1x1 - 1 - G/Y - 0 - XX - X

Part Number	Point No.	Ports	Shielded	LED Style	Back Peg	Gold Plating	Plastic
	8P8C Point	1x1-1 Ports 1x2-2 Ports 1x4-4 Ports 1x6-6 Ports 1x8-8 Ports	1-With Shielded 2-EMI Shielded 3-Top EMI Shielded	G/Y-Green / Yellow Y/G-Yellow / Green R/G-Red / Green G/R-Green / Red G/G-Green / Green Y/Y -Yellow / Yellow 0-Without LED	0-Without Back Peg 1-1 Back Peg 2-2 Back Peg	01-Fu" 02-3u" 03-6u" 04-15u" 05-30u" 06-50u	1-Nylon66 2-Nylon46 3-PBT

Modular Jack With LED Series

KLS12-108-8P Modular Jack With LED 56 Series 1x1 Ports

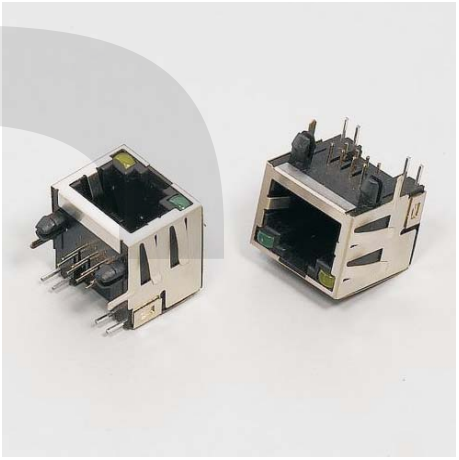

MATERIAL

1.Housing Material: Glass Filled Plyester UL94V-0 PBT, Nylon
2.Housing Color: Black or others
3.Contact Material: Phosphor Bronze Φ0.46mm
4.Plating: Gold plating over nickel. Gold plating thickness
1.5u "/ 3u" / 6u "/ 15u" / 30u "/ 50u"
5.Shield: 0.23 Thickness Brass with nickel plated

ELECTRICAL

1.Current Rating: 1.5 Amp
2.Voltage Rating: 125VAC
3.Contact Resistance: 30 MΩ Max.
4.Insulation Resistance: 500 MΩ Min. @ 500 VDC
5.Withstanding Voltage: 1000VAC RMS 50Hz 1 minute

MECHANICAL

1.Durability: 750 cycles Min.
2.PCB Retention pre-solder: 1 LB Min.

ENVIRONMENTAL

1.Storage: -40°C ~ +80°C
2.Operation: -40°C ~ +70°C

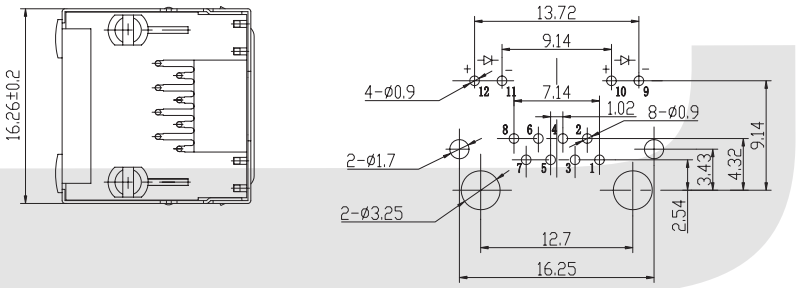

PC Board Layout

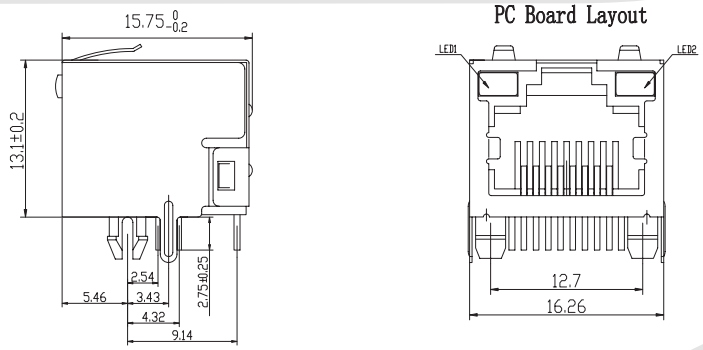

ORDER INFORMATION

KLS12-108 - 8P8C - 1x1 - 3 - G/Y - 0 - XX - X

Part Number	Point No.	Ports	Shielded	LED Style	Back Peg	Gold Plating	Plastic
	8P8C Point	1x1-1 Ports 1x2-2 Ports 1x4-4 Ports 1x6-6 Ports 1x8-8 Ports	1-With Shielded 2-EMI Shielded 3-Top EMI Shielded	G/Y-Green / Yellow Y/G-Yellow / Green R/G-Red / Green G/R-Green / Red G/G-Green / Green Y/Y -Yellow / Yellow 0-Without LED	0-Without Back Peg 1-1 Back Peg 2-2 Back Peg	01-Fu" 02-3u" 03-6u" 04-15u" 05-30u" 06-50u	1-Nylon66 2-Nylon46 3-PBT

Modular Jack With LED Series

XII

KLS12-108-8P Modular Jack With LED 56 Series 1x2 Ports

MATERIAL

1.Housing Material: Glass Filled Plyester UL94V-0 PBT, Nylon
2.Housing Color: Black or others
3.Contact Material: Phosphor Bronze Φ0.46mm
4.Plating: Gold plating over nickel. Gold plating thickness
1.5u "/ 3u" / 6u "/ 15u" / 30u "/ 50u"
5.Shield: 0.23 Thickness Brass with nickel plated



ELECTRICAL

1.Current Rating: 1.5 Amp
2.Voltage Rating: 125VAC
3.Contact Resistance: 30 MΩ Max.
4.Insulation Resistance: 500 MΩ Min. @ 500 VDC
5.Withstanding Voltage: 1000VAC RMS 50Hz 1 minute

MECHANICAL

1.Durability: 750 cycles Min.
2.PCB Retention pre-solder: 1 LB Min.

ENVIRONMENTAL

1.Storage: -40°C ~ +80°C
2.Operation: -40°C ~ +70°C

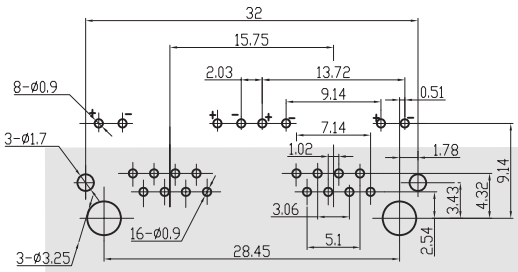

PC Board Layout

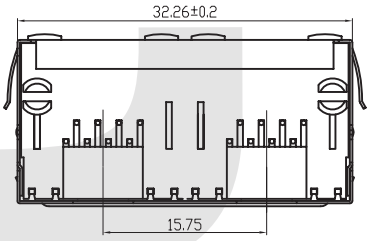

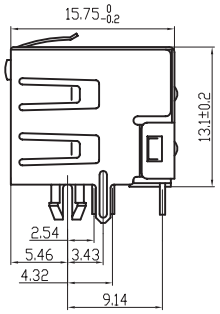

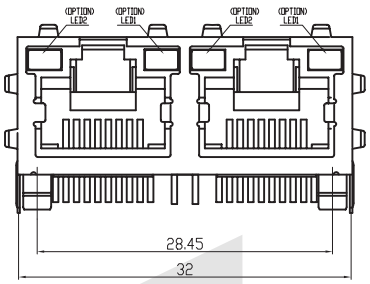

ORDER INFORMATION

KLS12-108 - 8P8C - 1x2 - 2 - G/Y - 0 - XX - X

Part Number	Point No.	Ports	Shielded	LED Style	Back Peg	Gold Plating	Plastic
	8P8C Point	1x1-1 Ports 1x2-2 Ports 1x4-4 Ports 1x6-6 Ports 1x8-8 Ports	1-With Shielded 2-EMI Shielded 3-Top EMI Shielded	G/Y-Green / Yellow Y/G-Yellow / Green R/G-Red / Green G/R-Green / Red G/G-Green / Green Y/Y -Yellow / Yellow 0-Without LED	0-Without Back Peg 1-1 Back Peg 2-2 Back Peg	01-Fu" 02-3u" 03-6u" 04-15u" 05-30u" 06-50u	1-Nylon66 2-Nylon46 3-PBT

Modular Jack With LED Series

KLS12-108-8P Modular Jack With LED 56 Series 1x4 Ports



MATERIAL

1.Housing Material: Glass Filled Plyester UL94V-0 PBT, Nylon
2.Housing Color: Black or others
3.Contact Material: Phosphor Bronze Φ0.46mm
4.Plating: Gold plating over nickel. Gold plating thickness
1.5u "/ 3u" / 6u "/ 15u" / 30u "/ 50u"
5.Shield: 0.23 Thickness Brass with nickel plated

ELECTRICAL

1.Current Rating: 1.5 Amp
2.Voltage Rating: 125VAC
3.Contact Resistance: 30 MΩ Max.
4.Insulation Resistance: 500 MΩ Min. @ 500 VDC
5.Withstanding Voltage: 1000VAC RMS 50Hz 1 minute

MECHANICAL

1.Durability: 750 cycles Min.
2.PCB Retention pre-solder: 1 LB Min.

ENVIRONMENTAL

1.Storage: -40°C ~ +80°C
2.Operation: -40°C ~ +70°C

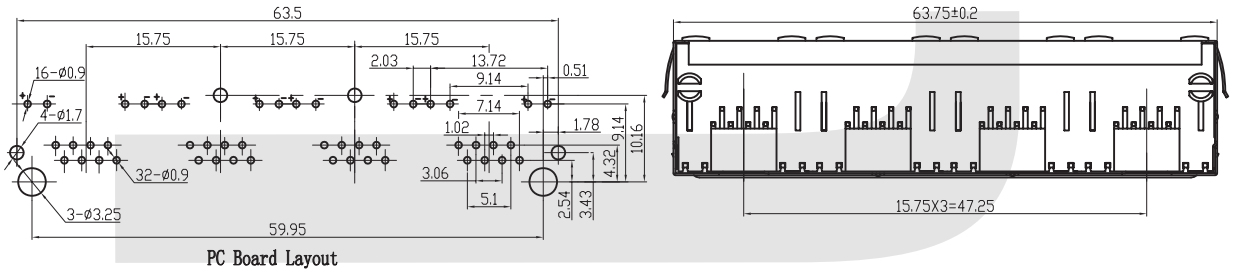

PC Board Layout

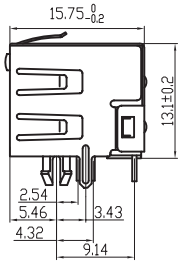

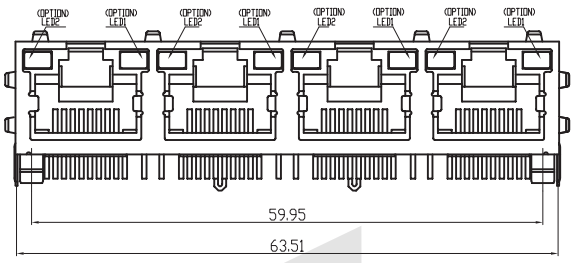

ORDER INFORMATION

KLS12-108 - 8P8C - 1x4 - 2 - G/Y - 2 - XX - X

Part Number	Point No.	Ports	Shielded	LED Style	Back Peg	Gold Plating	Plastic
	8P8C Point	1x1-1 Ports 1x2-2 Ports 1x4-4 Ports 1x6-6 Ports 1x8-8 Ports	1-With Shielded 2-EMI Shielded 3-Top EMI Shielded	G/Y-Green / Yellow Y/G-Yellow / Green R/G-Red / Green G/R-Green / Red G/G-Green / Green Y/Y -Yellow / Yellow 0-Without LED	0-Without Back Peg 1-1 Back Peg 2-2 Back Peg	01-Fu" 02-3u" 03-6u" 04-15u" 05-30u" 06-50u	1-Nylon66 2-Nylon46 3-PBT

Modular Jack With LED Series

XII

KLS12-108-8P Modular Jack With LED 56 Series 1x6 Ports



MATERIAL

1.Housing Material: Glass Filled Plyester UL94V-0 PBT, Nylon
2.Housing Color: Black or others
3.Contact Material: Phosphor Bronze Φ0.46mm
4.Plating: Gold plating over nickel. Gold plating thickness
1.5u "/ 3u" / 6u "/ 15u" / 30u "/ 50u"
5.Shield: 0.23 Thickness Brass with nickel plated

ELECTRICAL

1.Current Rating: 1.5 Amp
2.Voltage Rating: 125VAC
3.Contact Resistance: 30 MΩ Max.
4.Insulation Resistance: 500 MΩ Min. @ 500 VDC
5.Withstanding Voltage: 1000VAC RMS 50Hz 1 minute

MECHANICAL

1.Durability: 750 cycles Min.
2.PCB Retention pre-solder: 1 LB Min.

ENVIRONMENTAL

1.Storage: -40°C ~ +80°C
2.Operation: -40°C ~ +70°C

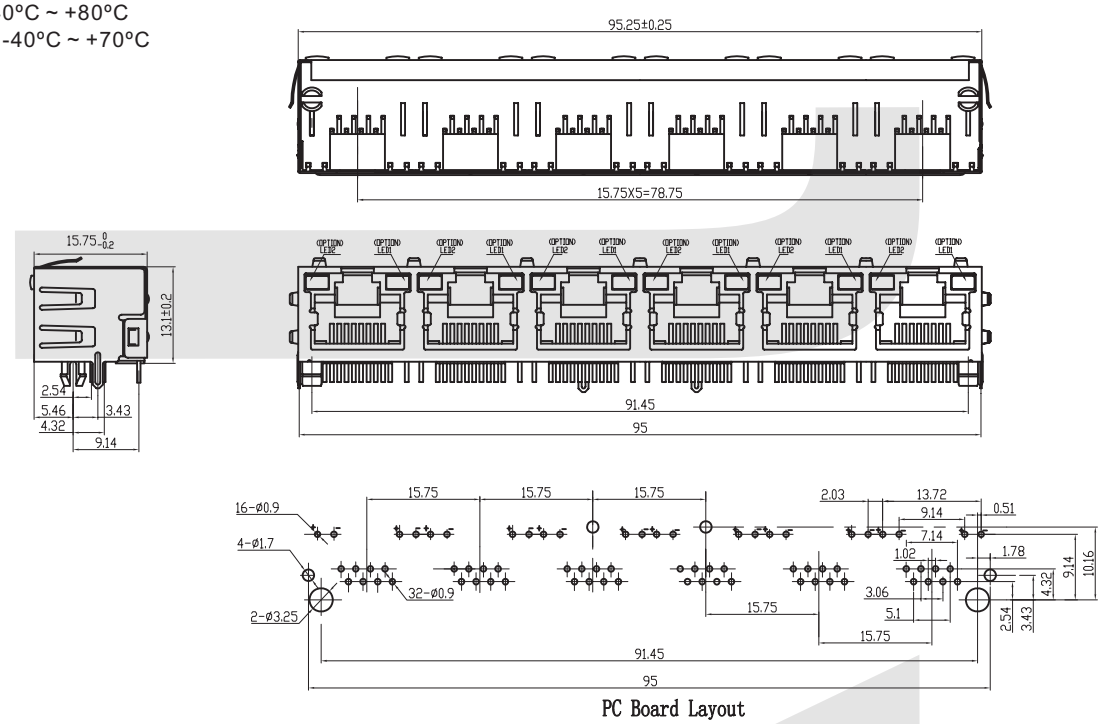

PC Board Layout

ORDER INFORMATION

KLS12-108 - 8P8C - 1x6 - 2 - G/Y - 2 - XX - X

Part Number	Point No.	Ports	Shielded	LED Style	Back Peg	Gold Plating	Plastic
	8P8C Point	1x1-1 Ports 1x2-2 Ports 1x4-4 Ports 1x6-6 Ports 1x8-8 Ports	1-With Shielded 2-EMI Shielded 3-Top EMI Shielded	G/Y-Green / Yellow Y/G-Yellow / Green R/G-Red / Green G/R-Green / Red G/G-Green / Green Y/Y -Yellow / Yellow 0-Without LED	0-Without Back Peg 1-1 Back Peg 2-2 Back Peg	01-Fu" 02-3u" 03-6u" 04-15u" 05-30u" 06-50u	1-Nylon66 2-Nylon46 3-PBT

Modular Jack With LED Series

XII

KLS12-108-8P Modular Jack With LED 56 Series 1x8 Ports



MATERIAL

1.Housing Material: Glass Filled Plyester UL94V-0 PBT, Nylon
2.Housing Color: Black or others
3.Contact Material: Phosphor Bronze Φ0.46mm
4.Plating: Gold plating over nickel. Gold plating thickness
1.5u "/ 3u" / 6u "/ 15u" / 30u "/ 50u"
5.Shield: 0.23 Thickness Brass with nickel plated

ELECTRICAL

1.Current Rating: 1.5 Amp
2.Voltage Rating: 125VAC
3.Contact Resistance: 30 MΩ Max.
4.Insulation Resistance: 500 MΩ Min. @ 500 VDC
5.Withstanding Voltage: 1000VAC RMS 50Hz 1 minute

MECHANICAL

1.Durability: 750 cycles Min.
2.PCB Retention pre-solder: 1 LB Min.

ENVIRONMENTAL

1.Storage: -40°C ~ +80°C
2.Operation: -40°C ~ +70°C

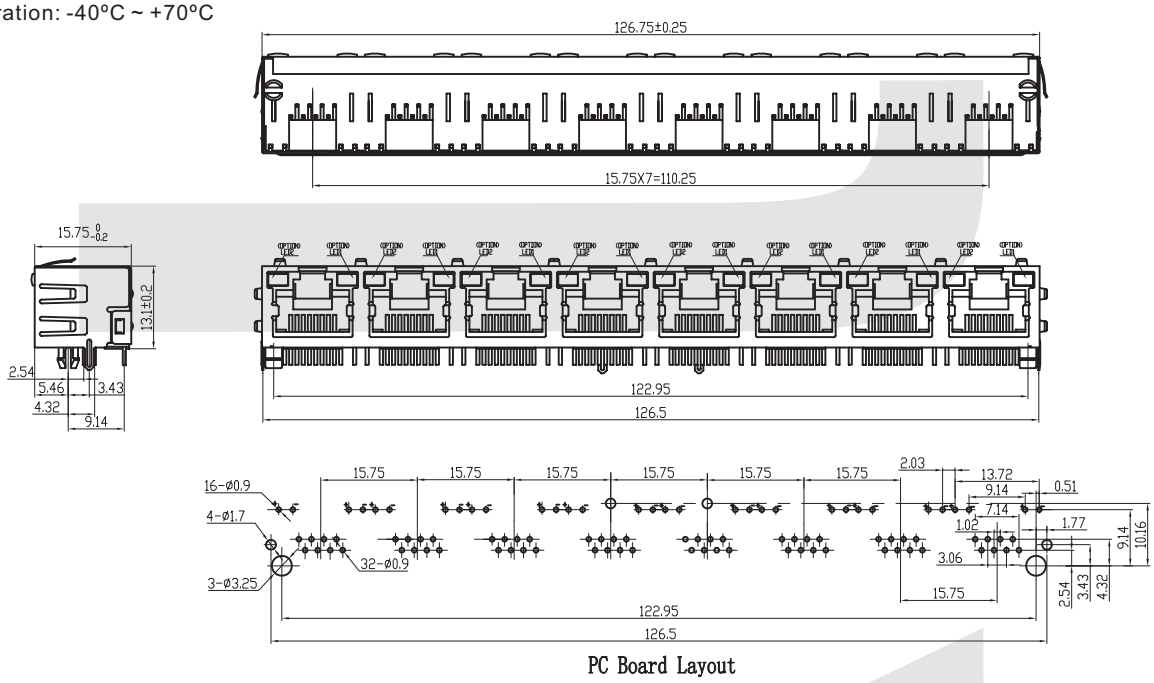

PC Board Layout

ORDER INFORMATION

KLS12-108 - 8P8C - 1x8 - 2 - G/Y - 2 - XX - X

Part Number	Point No.	Ports	Shielded	LED Style	Back Peg	Gold Plating	Plastic
	8P8C Point	1x1-1 Ports 1x2-2 Ports 1x4-4 Ports 1x6-6 Ports 1x8-8 Ports	1-With Shielded 2-EMI Shielded 3-Top EMI Shielded	G/Y-Green / Yellow Y/G-Yellow / Green R/G-Red / Green G/R-Green / Red G/G-Green / Green Y/Y -Yellow / Yellow 0-Without LED	0-Without Back Peg 1-1 Back Peg 2-2 Back Peg	01-Fu" 02-3u" 03-6u" 04-15u" 05-30u" 06-50u	1-Nylon66 2-Nylon46 3-PBT

Modular Jack With LED Series

KLS12-315-1x4 Modular Jack With LED Series 1x4 Ports

MATERIAL:
1. HOUSING MATERIAL : GLASS FILLED POLYESTER UL94V-0ABS、 PBT、 NYLON
2. HOUSING COLOR : BLACK、GRAY、IVORY、WHITE OR OTHERS
3. CONTACT MATERIAL : PHOSPHOR BRONZE φ0.46mm
4. PLATING : GOLD PLATING OVER NICKEL.GOLD PLATINGTHICKNESS 1.5u"/3u"/6u"/15u"/30u"/50u"
5. SHIELD : 0.23 THICKNESS BRASS WITH NICKEL PLATED

ELECTRICAL:
1. VOLTAGE RATING: 125 VAC RMS.
2. CURRENT RATING : 1.5 AMP
3. CONTACT RESISTANCE : 30 MILLIOHMS MAX.
4. INSULATION RESISTANCE : 500 MEGOHMS MIN @500 VDC
5. DIELECTRIC WITHSTANDING RESISTANCE : 1000 VAC RMS. 50Hz 1MINUTE

MECHANICAL:
1. DURABILITY : 750 CYCLES MIN
2. PCB RETENTION PRE-SOLDER : 1 LB MIN

ENVIRONMENTAL
1. STORAGE :-40℃~80℃



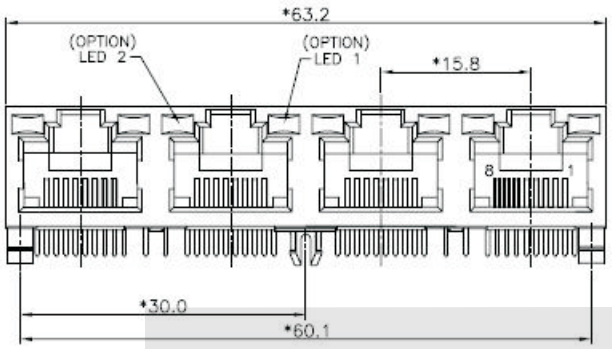

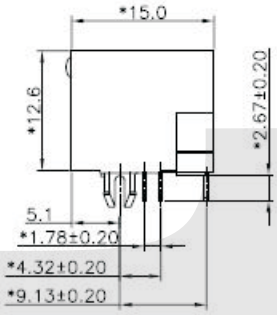

: 125 VAC RMS.
: 1.5 AMP.
: 30 MILLIOHMS MAX.
CE: 1000 MEGOHMS MIN. @ 500 VDC.
I : 1000 VAC RMS 60Hz, 1MIN.
RD VOLTAGE: 2.2 VOLTS TYPICAL.
SE VOLTAGE: 5 VOLTS MAXIMUM.
LES MIN.

: HIGH TEMP. UL94V-0 COLOR BK.
: GLASS FILLED POLYESTER UL94V-0 BK.
: GLASS FILLED POLYESTER UL94V-0 BK.
: 3.05*1.85*7.0, P=2.54mm.

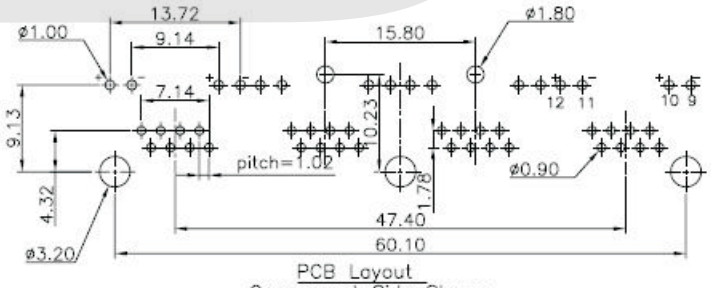

PCB Layout
Component Side Shown

ORDER INFORMATION

KLS12-315 - 8P8C 1x4 - G/Y - XX - X

Part Number	Point No.	Ports	LED Style	Gold Plating	Plastic
	8P8C Point	1x11 Ports 1x2-2 Ports 1x4-4 Ports	G/Y-Green / Yellow Y/G-Yellow / Green R/G-Red / Green G/R-Green / Red G/G-Green / Green Y/Y-Yellow / Yellow 0-Without LED	01-Fu" 02-3u" 03-6u" 04-15u" 05-30u" 06-50u	1-Nylon66 2-Nylon46 3-PBT

Modular Jack With LED Series

KLS12-315-1x2 Modular Jack With LED Series 1x2 Ports

MATERIAL:
1. HOUSING MATERIAL : GLASS FILLED POLYESTER UL94V-0ABS、 PBT、 NYLON
2. HOUSING COLOR : BLACK、GRAY、IVORY、WHITE OR OTHERS
3. CONTACT MATERIAL : PHOSPHOR BRONZE φ0.46mm
4. PLATING : GOLD PLATING OVER NICKEL.GOLD PLATINGTHICKNESS 1.5u"/3u"/6u"/15u"/30u"/50u"
5. SHIELD : 0.23 THICKNESS BRASS WITH NICKEL PLATED

ELECTRICAL:
1. VOLTAGE RATING: 125 VAC RMS.
2. CURRENT RATING : 1.5 AMP
3. CONTACT RESISTANCE : 30 MILLIOHMS MAX.
4. INSULATION RESISTANCE : 500 MEGOHMS MIN @500 VDC
5. DIELECTRIC WITHSTANDING RESISTANCE : 1000 VAC RMS. 50Hz 1MINUTE

MECHANICAL:
1. DURABILITY : 750 CYCLES MIN
2. PCB RETENTION PRE-SOLDER : 1 LB MIN

ENVIRONMENTAL
1. STORAGE :-40℃~80℃

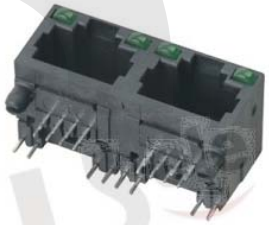

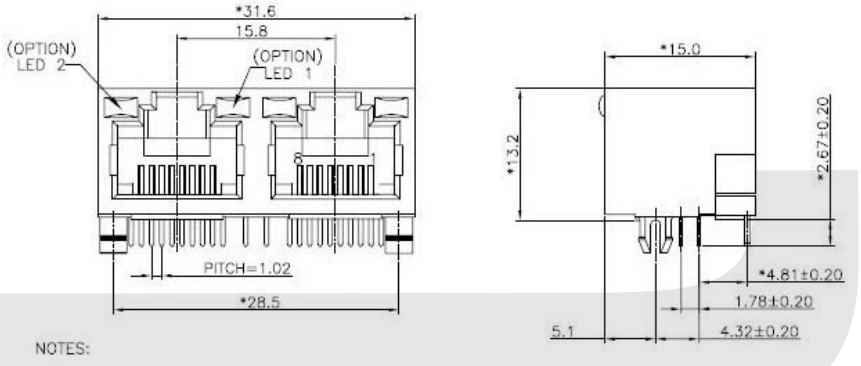

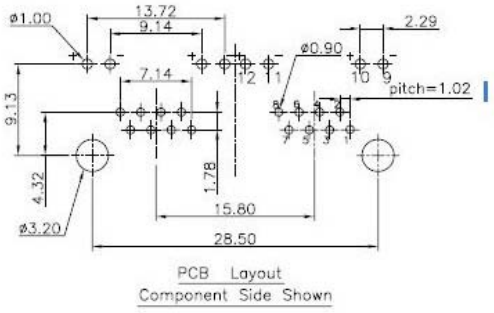

ORDER INFORMATION

KLS12-315 - 8P8C 1x2 - G/Y - XX - X

Part Number	Point No.	Ports	LED Style	Gold Plating	Plastic
	8P8C Point	1x11 Ports 1x2-2 Ports 1x4-4 Ports	G/Y-Green / Yellow Y/G-Yellow / Green R/G-Red / Green G/R-Green / Red G/G-Green / Green Y/Y-Yellow / Yellow 0-Without LED	01-Fu" 02-3u" 03-6u" 04-15u" 05-30u" 06-50u	1-Nylon66 2-Nylon46 3-PBT

Modular Jack With LED Series

KLS12-314-8P Modular Jack With LED 59 Series 2x2 Ports



MATERIAL

1.Housing Material: Glass Filled Plyester UL94V-0 PBT, Nylon
2.Housing Color: Black or others
3.Contact Material: Phosphor Bronze Flat Pin
4.Plating: Gold plating over nickel. Gold plating thickness
1.5u "/ 3u" / 6u "/ 15u" / 30u "/ 50u"

ELECTRICAL

1.Current Rating: 1.5 Amp
2.Voltage Rating: 125VAC
3.Contact Resistance: 30 MΩ Max.
4.Insulation Resistance: 500 MΩ Min. @ 500 VDC
5.Withstanding Voltage: 1000VAC RMS 50Hz 1 minute

MECHANICAL

1.Durability: 750 cycles Min.
2.PCB Retention pre-solder: 1 LB Min.

ENVIRONMENTAL

1.Storage: -40°C ~ +80°C
2.Operation: -40°C ~ +70°C

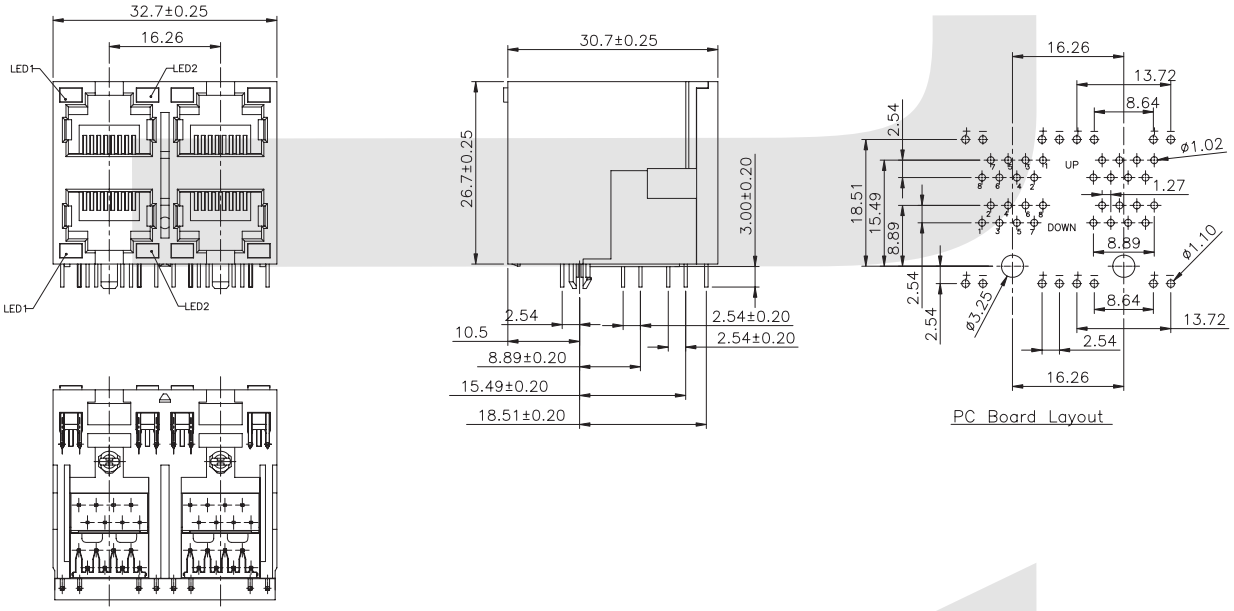

ORDER INFORMATION

KLS12-314 - 8P8C - 2x2 - G/Y - XX - X

Part Number	Point No.	Ports	LED Style	Gold Plating	Plastic
	8P8C Point	2x1-2 Ports 2x2-4 Ports 2x4-8 Ports 2x6-12 Ports	G/Y-Green / Yellow Y/G-Yellow / Green R/G-Red / Green G/R-Green / Red G/G-Green / Green Y/Y -Yellow / Yellow 0-Without LED	01-Fu" 02-3u" 03-6u" 04-15u" 05-30u" 06-50u	1-Nylon66 2-Nylon46 3-PBT

Modular Jack With LED Series

KLS12-313-8P Modular Jack With LED 59 Series 2x1 Ports



MATERIAL

1.Housing Material: Glass Filled Plyester UL94V-0 PBT, Nylon
2.Housing Color: Black or others
3.Contact Material: Phosphor Bronze Flat Pin
4.Plating: Gold plating over nickel. Gold plating thickness
1.5u "/ 3u" / 6u "/ 15u" / 30u "/ 50u"
5.Shield: 0.23 Thickness Brass with nickel plated

ELECTRICAL

1.Current Rating: 1.5 Amp
2.Voltage Rating: 125VAC
3.Contact Resistance: 30 MΩ Max.
4.Insulation Resistance: 500 MΩ Min. @ 500 VDC
5.Withstanding Voltage: 1000VAC RMS 50Hz 1 minute

MECHANICAL

1.Durability: 750 cycles Min.
2.PCB Retention pre-solder: 1 LB Min.

ENVIRONMENTAL

1.Storage: -40°C ~ +80°C
2.Operation: -40°C ~ +70°C

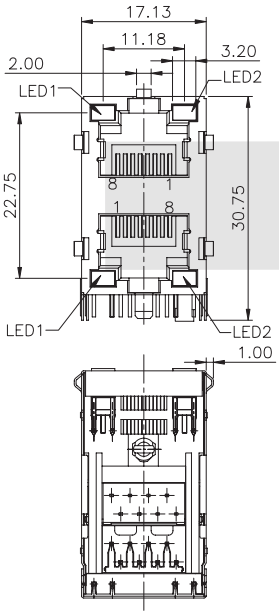

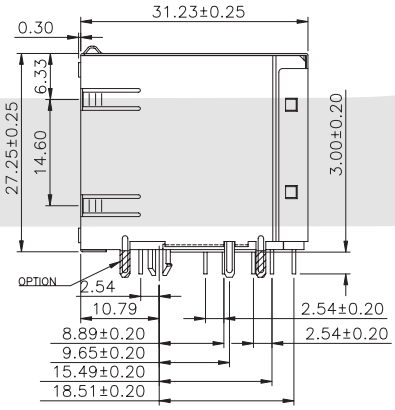

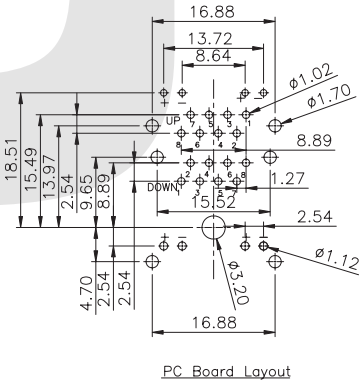

PC Board Layout

ORDER INFORMATION

KLS12-313 - 8P8C - 2x1 - 2 - G/Y - 0 - XX - X

Part Number	Point No.	Ports	Shielded	LED Style	Back Peg	Gold Plating	Plastic
	8P8C Point	2x1-2 Ports 2x2-4 Ports 2x4-8 Ports 2x6-12 Ports	1-With Shielded 2-EMI Shielded	G/Y-Green / Yellow Y/G-Yellow / Green R/G-Red / Green G/R-Green / Red G/G-Green / Green Y/Y -Yellow / Yellow 0-Without LED	0-Without Back Peg 1-1 Back Peg 2-2 Back Peg	01-Fu" 02-3u" 03-6u" 04-15u" 05-30u" 06-50u	1-Nylon66 2-Nylon46 3-PBT

Modular Jack With LED Series

KLS12-313-8P Modular Jack With LED 59 Series 2x2 Ports



MATERIAL

1.Housing Material: Glass Filled Plyester UL94V-0 PBT, Nylon
2.Housing Color: Black or others
3.Contact Material: Phosphor Bronze Flat Pin
4.Plating: Gold plating over nickel. Gold plating thickness
1.5u "/ 3u" / 6u "/ 15u" / 30u "/ 50u"
5.Shield: 0.23 Thickness Brass with nickel plated

ELECTRICAL

1.Current Rating: 1.5 Amp
2.Voltage Rating: 125VAC
3.Contact Resistance: 30 MΩ Max.
4.Insulation Resistance: 500 MΩ Min. @ 500 VDC
5.Withstanding Voltage: 1000VAC RMS 50Hz 1 minute

MECHANICAL

1.Durability: 750 cycles Min.
2.PCB Retention pre-solder: 1 LB Min.

ENVIRONMENTAL

1.Storage: -40°C ~ +80°C
2.Operation: -40°C ~ +70°C

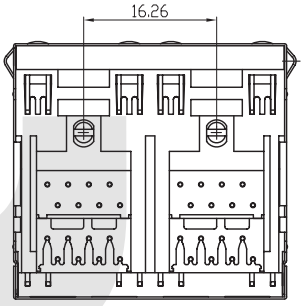

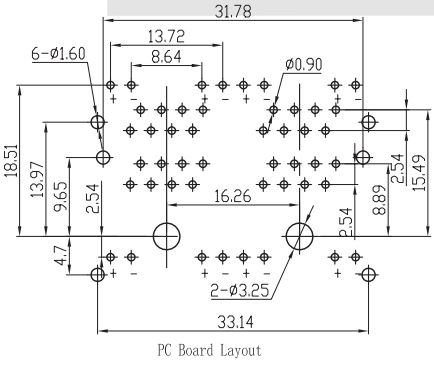

PC Board Layout

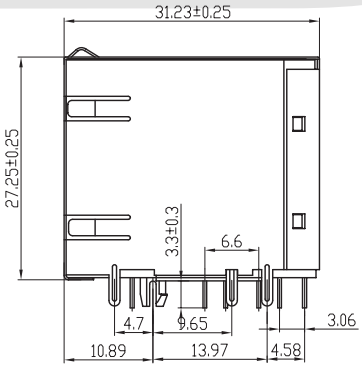

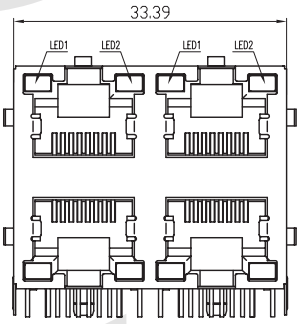

ORDER INFORMATION

KLS12-313 - 8P8C - 2x2 - 2 - G/Y - 0 - XX - X

Part Number	Point No.	Ports	Shielded	LED Style	Back Peg	Gold Plating	Plastic
	8P8C Point	2x1-2 Ports 2x2-4 Ports 2x4-8 Ports 2x6-12 Ports	1-With Shielded 2-EMI Shielded	G/Y-Green / Yellow Y/G-Yellow / Green R/G-Red / Green G/R-Green / Red G/G-Green / Green Y/Y -Yellow / Yellow 0-Without LED	0-Without Back Peg 1-1 Back Peg 2-2 Back Peg	01-Fu" 02-3u" 03-6u" 04-15u" 05-30u" 06-50u	1-Nylon66 2-Nylon46 3-PBT

Modular Jack With LED Series

XII

KLS12-313-8P Modular Jack With LED 59 Series 2x4 Ports



MATERIAL

1.Housing Material: Glass Filled Plyester UL94V-0 PBT, Nylon
2.Housing Color: Black or others
3.Contact Material: Phosphor Bronze Flat Pin
4.Plating: Gold plating over nickel. Gold plating thickness
1.5u "/ 3u" / 6u "/ 15u" / 30u "/ 50u"
5.Shield: 0.23 Thickness Brass with nickel plated

ELECTRICAL

1.Current Rating: 1.5 Amp
2.Voltage Rating: 125VAC
3.Contact Resistance: 30 MΩ Max.
4.Insulation Resistance: 500 MΩ Min. @ 500 VDC
5.Withstanding Voltage: 1000VAC RMS 50Hz 1 minute

MECHANICAL

1.Durability: 750 cycles Min.
2.PCB Retention pre-solder: 1 LB Min.

ENVIRONMENTAL

1.Storage: -40°C ~ +80°C
2.Operation: -40°C ~ +70°C

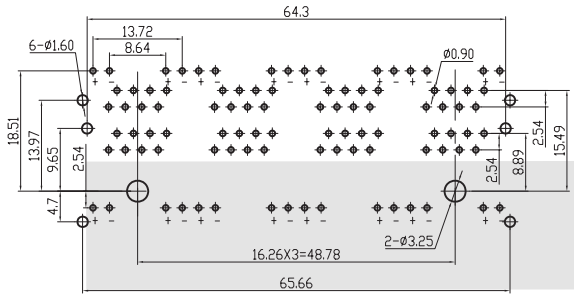

PC Board Layout

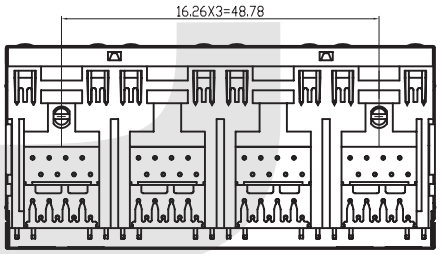

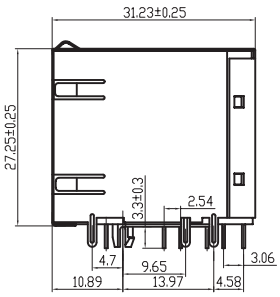

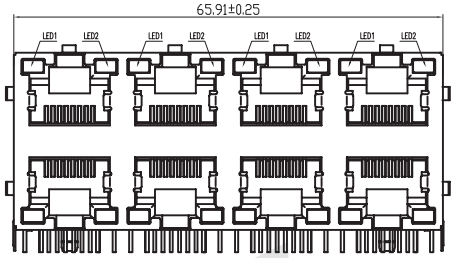

ORDER INFORMATION

KLS12-313 - 8P8C - 2x4 - 2 - G/Y - 0 - XX - X

Part Number	Point No.	Ports	Shielded	LED Style	Back Peg	Gold Plating	Plastic
	8P8C Point	2x1-2 Ports 2x2-4 Ports 2x4-8 Ports 2x6-12 Ports	1-With Shielded 2-EMI Shielded	G/Y-Green / Yellow Y/G-Yellow / Green R/G-Red / Green G/R-Green / Red G/G-Green / Green Y/Y -Yellow / Yellow 0-Without LED	0-Without Back Peg 1-1 Back Peg 2-2 Back Peg	01-Fu" 02-3u" 03-6u" 04-15u" 05-30u" 06-50u	1-Nylon66 2-Nylon46 3-PBT

Modular Jack With LED Series

KLS12-313-8P Modular Jack With LED 59 Series 2x6 Ports



MATERIAL

1.Housing Material: Glass Filled Plyester UL94V-0 PBT, Nylon
2.Housing Color: Black or others
3.Contact Material: Phosphor Bronze Flat Pin
4.Plating: Gold plating over nickel. Gold plating thickness
1.5u "/ 3u" / 6u "/ 15u" / 30u "/ 50u"
5.Shield: 0.23 Thickness Brass with nickel plated

ELECTRICAL

1.Current Rating: 1.5 Amp
2.Voltage Rating: 125VAC
3.Contact Resistance: 30 MΩ Max.
4.Insulation Resistance: 500 MΩ Min. @ 500 VDC
5.Withstanding Voltage: 1000VAC RMS 50Hz 1 minute

MECHANICAL

1.Durability: 750 cycles Min.
2.PCB Retention pre-solder: 1 LB Min.

ENVIRONMENTAL

1.Storage: -40°C ~ +80°C
2.Operation: -40°C ~ +70°C

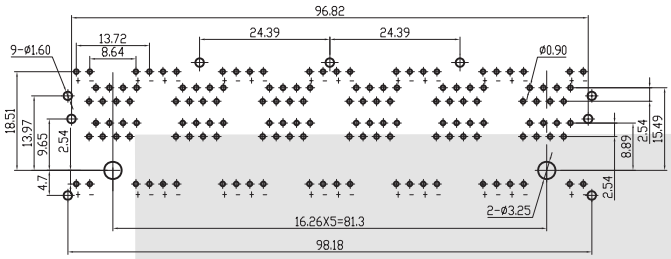

PC Board Layout

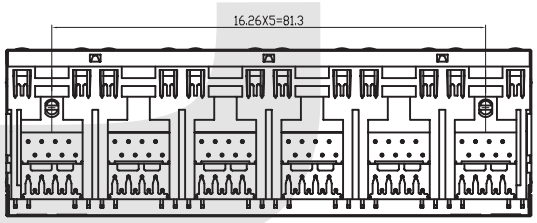

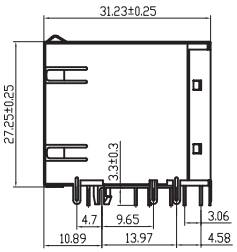

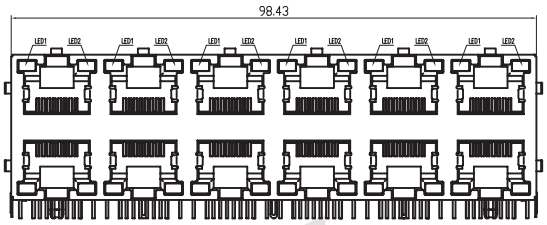

ORDER INFORMATION

KLS12-313 - 8P8C - 2x6 - 2 - G/Y - 0 - XX - X

Part Number	Point No.	Ports	Shielded	LED Style	Back Peg	Gold Plating	Plastic
	8P8C Point	2x1-2 Ports 2x2-4 Ports 2x4-8 Ports 2x6-12 Ports	1-With Shielded 2-EMI Shielded	G/Y-Green / Yellow Y/G-Yellow / Green R/G-Red / Green G/R-Green / Red G/G-Green / Green Y/Y -Yellow / Yellow 0-Without LED	0-Without Back Peg 1-1 Back Peg 2-2 Back Peg	01-Fu" 02-3u" 03-6u" 04-15u" 05-30u" 06-50u	1-Nylon66 2-Nylon46 3-PBT

REV	ECO	DESCRIPTION	DRFT

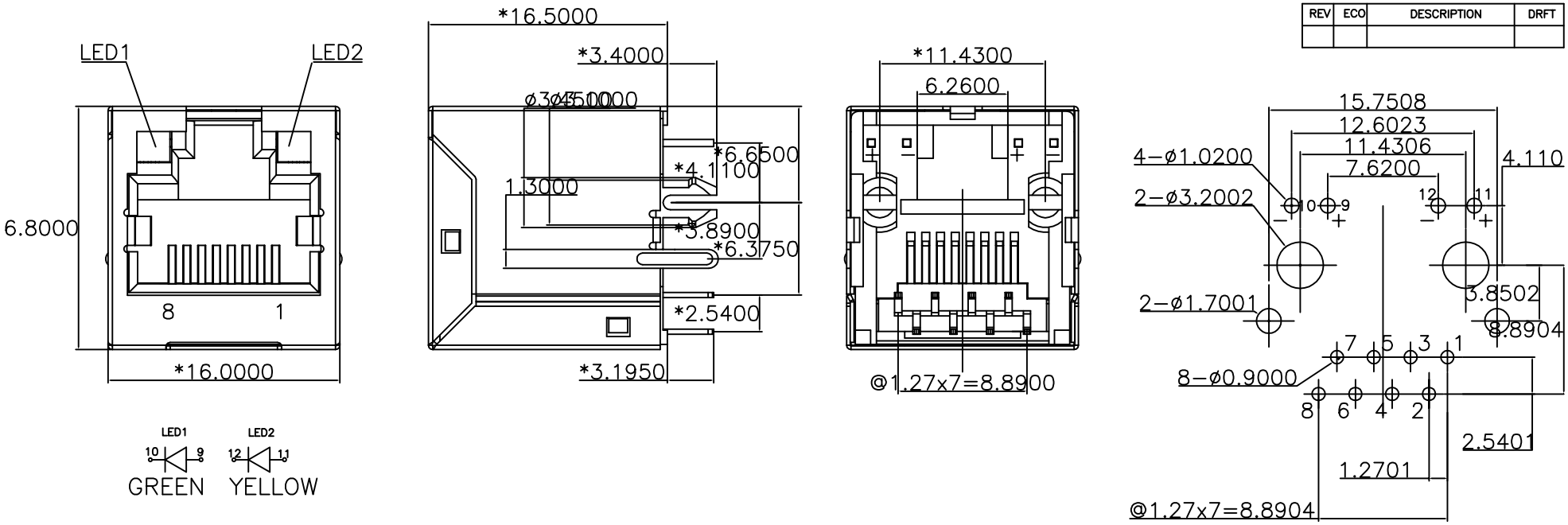

PC BOARD LAYOUT
COMPONENT SIDE SHOWN

NOTES:

ELECTRICAL:

1. VOLTAGE RATING : 125 VAC RMS.
2. CURRENT RATING : 1.5 AMP.
3. CONTACT RESISTANCE : 30 MILLIOHMS MAX.
4. INSULATION RESISTANCE: 1000 MEGOHMS MIN @ 500 VDC.
5. DIELECTRIC STRENGTH : 1000 VDC RMS 60Hz, 1MIN.

MECHANICAL:

1. SHIELD MATERIAL : BRASS C2680 t=0.25mm.
2. HOUSING MATERIAL : NYLON+GF30% UL94V−0.
   HOUSING COLOR : BLACK.
3. CONTACT MATERIAL : PHOSPHOR BRONZE t=0.35mm.
4. PLATING : GOLD PLATING OVER NICKEL.
5. OPERATING LIFE : 750 CYCLES MIN.
6. PCB RETENTION PRE−SOLDER : 1 LB MIN.
7. PCB RETENTION POST−SOLDER: 10 LBS MIN.
8. LED'S CHARACTERISTICS:
   8−1.POWER DISSIPATION:80MW MAX.
   8−2.FORWARD CURRENT:30MA MAX.
   8−3.FORWARD VOLTAGE:2.2 VOLTS TYPICAL.
   8−4.REVERSE VOLTAGE:5.0VOLTS MAX.
   8−5.PEAR EMISSION WAVELENGTH:GREEN LED 568nm TYPICAL.
   YELLOW LED 589nm TYPICAL.
   8−6.ANODE ⊣⊢ CATHODE

ENVIRONMENTAL:

1. STORAGE : −40°C TO +85°C.
2. OPERATION: −40°C TO +85°C.
3. WAVE SOLDERING TEMPERATURE:
   255°C TO 265°C 5−10 SECONDS.
4. RoHS COMPLIANT.

MATES WITH MODULAR PLUG CONFORMING TO FCC PART 68, SUBPART F.

LBF5288−3A0X

DETACHED LISTS	MM (INCH)	DFTO DESIGNER	DATE
	TOLERANCES EXCEPT AS NOTED	CHKD	DATE
	MM .0 ± 0.2 ± .00 ± 0.15 ± .000 ± 0.075 ±	MFO	DATE
		APPVL LUSHENG	DATE
		MATERIAL : MATERIAL	
	ANGLES ± 0.5	QT'Y : QUANTITY	
	THIRD ANGLE PROJECTION	FINISH : FINISH	
		SCALE : SCALE	

KLS ELECTRONIC CO., LTD

TITLE
KLS12-109-8P8C-G/Y

DRAWING NO. /PART NO.	SIZE A3
DO NOT SCALE DRAWING	SHEET X

Modular Jack With LED Series

KLS12-315-8P Modular Jack With LED 56 Series 1x1 Ports

MATERIAL

1.Housing Material: Glass Filled Plyester UL94V-0 PBT, Nylon
2.Housing Color: Black or others
3.Contact Material: Phosphor Bronze Flat Pin
4.Plating: Gold plating over nickel. Gold plating thickness
1.5u "/ 3u" / 6u "/ 15u" / 30u "/ 50u"



ELECTRICAL

1.Current Rating: 1.5 Amp
2.Voltage Rating: 125VAC
3.Contact Resistance: 30 MΩ Max.
4.Insulation Resistance: 500 MΩ Min. @ 500 VDC
5.Withstanding Voltage: 1000VAC RMS 50Hz 1 minute

MECHANICAL

1.Durability: 750 cycles Min.
2.PCB Retention pre-solder: 1 LB Min.

ENVIRONMENTAL

1.Storage: -40°C ~ +80°C
2.Operation: -40°C ~ +70°C

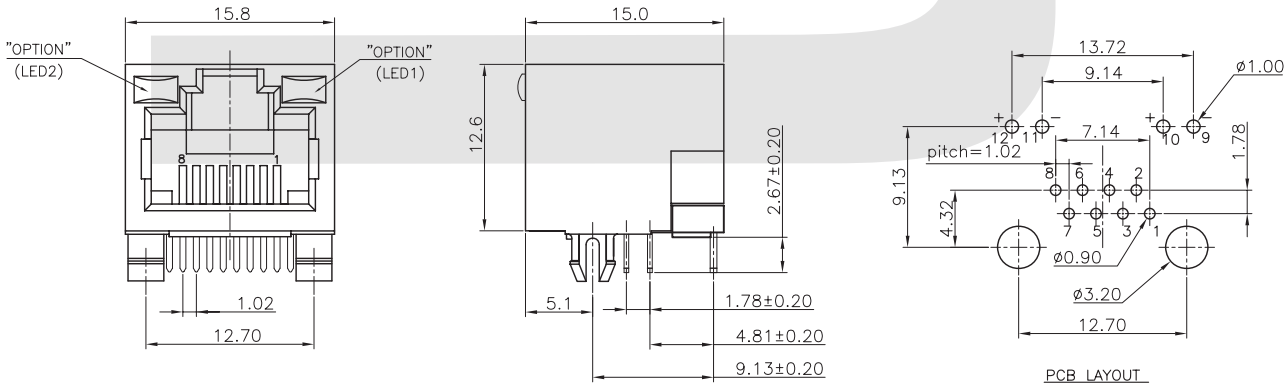

ORDER INFORMATION

KLS12-315 - 8P8C - 1x1 - G/Y - XX - X

Part Number	Point No.	Ports	LED Style	Gold Plating	Plastic
	8P8C Point	1x1-1 Ports 1x2-2 Ports 1x4-4 Ports	G/Y-Green / Yellow Y/G-Yellow / Green R/G-Red / Green G/R-Green / Red G/G-Green / Green Y/Y -Yellow / Yellow 0-Without LED	01-Fu" 02-3u" 03-6u" 04-15u" 05-30u" 06-50u	1-Nylon66 2-Nylon46 3-PBT

Modular Jack With LED Series

KLS12-315-8P Modular Jack With LED 56 Series 1x2 Ports

MATERIAL

1.Housing Material: Glass Filled Plyester UL94V-0 PBT, Nylon
2.Housing Color: Black or others
3.Contact Material: Phosphor Bronze Flat Pin
4.Plating: Gold plating over nickel. Gold plating thickness
1.5u "/ 3u" / 6u "/ 15u" / 30u "/ 50u"



ELECTRICAL

1.Current Rating: 1.5 Amp
2.Voltage Rating: 125VAC
3.Contact Resistance: 30 MΩ Max.
4.Insulation Resistance: 500 MΩ Min. @ 500 VDC
5.Withstanding Voltage: 1000VAC RMS 50Hz 1 minute

MECHANICAL

1.Durability: 750 cycles Min.
2.PCB Retention pre-solder: 1 LB Min.

ENVIRONMENTAL

1.Storage: -40ºC ~ +80ºC
2.Operation: -40ºC ~ +70ºC

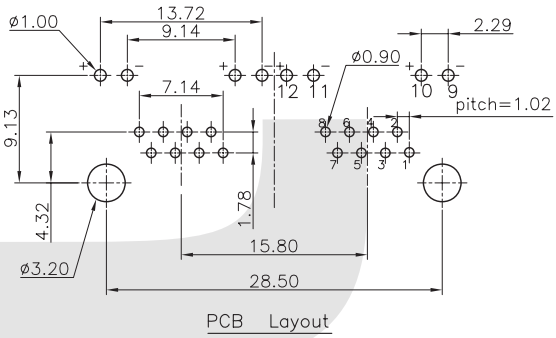

PCB Layout

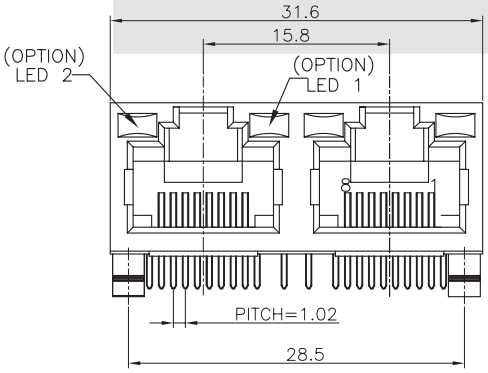

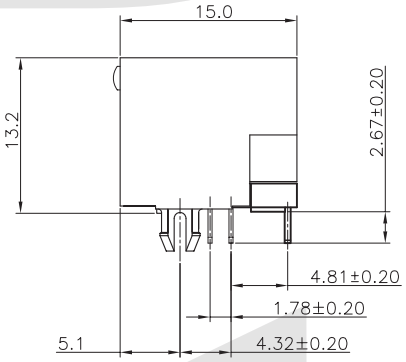

ORDER INFORMATION

KLS12-315 - 8P8C - 1x2 - G/Y - XX - X

Part Number	Point No.	Ports	LED Style	Gold Plating	Plastic
	8P8C Point	1x1-1 Ports 1x2-2 Ports 1x4-4 Ports	G/Y-Green / Yellow Y/G-Yellow / Green R/G-Red / Green G/R-Green / Red G/G-Green / Green Y/Y -Yellow / Yellow 0-Without LED	01-Fu" 02-3u" 03-6u" 04-15u" 05-30u" 06-50u	1-Nylon66 2-Nylon46 3-PBT

Modular Jack With LED Series

KLS12-315-8P Modular Jack With LED 56 Series 1x4 Ports

MATERIAL

1.Housing Material: Glass Filled Plyester UL94V-0 PBT, Nylon
2.Housing Color: Black or others
3.Contact Material: Phosphor Bronze Flat Pin
4.Plating: Gold plating over nickel. Gold plating thickness
1.5u "/ 3u" / 6u "/ 15u" / 30u "/ 50u"

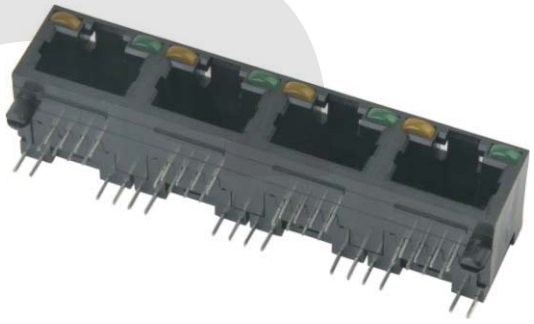

ELECTRICAL

1.Current Rating: 1.5 Amp
2.Voltage Rating: 125VAC
3.Contact Resistance: 30 MΩ Max.
4.Insulation Resistance: 500 MΩ Min. @ 500 VDC
5.Withstanding Voltage: 1000VAC RMS 50Hz 1 minute

MECHANICAL

1.Durability: 750 cycles Min.
2.PCB Retention pre-solder: 1 LB Min.

ENVIRONMENTAL

1.Storage: -40ºC ~ +80ºC
2.Operation: -40ºC ~ +70ºC

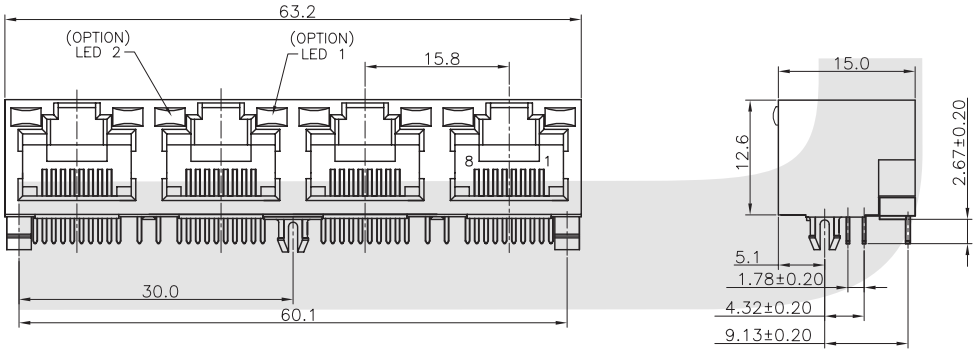

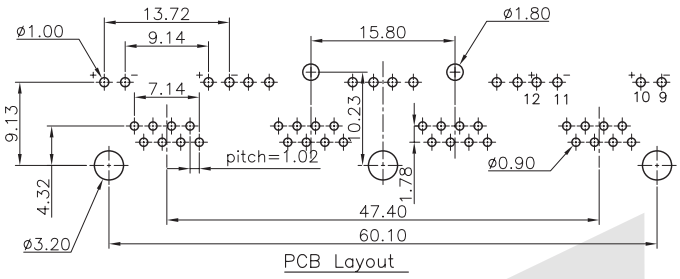

ORDER INFORMATION

KLS12-315 - 8P8C - 1x4 - G/Y - XX - X

Part Number	Point No.	Ports	LED Style	Gold Plating	Plastic
	8P8C Point	1x1-1 Ports 1x2-2 Ports 1x4-4 Ports	G/Y-Green / Yellow Y/G-Yellow / Green R/G-Red / Green G/R-Green / Red G/G-Green / Green Y/Y -Yellow / Yellow 0-Without LED	01-Fu" 02-3u" 03-6u" 04-15u" 05-30u" 06-50u	1-Nylon66 2-Nylon46 3-PBT

Modular Plugs Series

KLS12-RJ12-6P6C

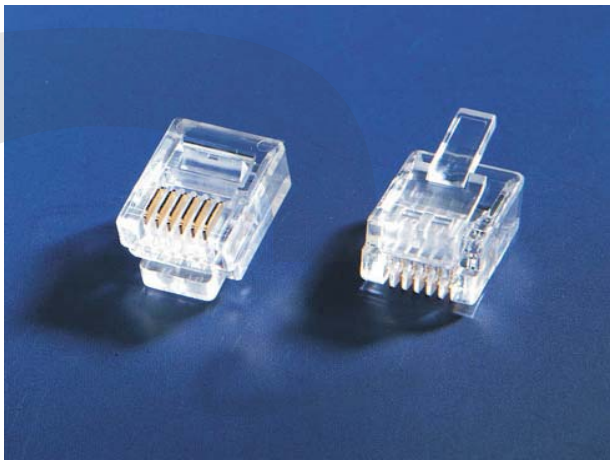

MATERIAL
1. Housing :Polycarbonate(pc) UL 94V-0 or UL 94V-2
2. Contact :Phosphor Bronze,Hard Gold plated over nickel
3.Shieldinjg:0.25mm Thickness Copper Alloy With Tin plated
4.Gold plating:3u inch,6u inch,15u inch,30u inch,50u inch

ELECTRICAL
1.Current Rating:1.5 Amps
2.Voltage Rating:125 Volts AC
3.Insulation Resistance:100 Megohms Min.
4.Contact Resistance:39 Millmhos Max.
5.Withstanding Voltage:1000VAC RMS 50Hz or 60Hz 1 Min.

MECHANICAL
CABLE TO PLUG TENSILE STRENGTH:7.7Kg MINI
DURABILITY:750MATING CYCLES MINI
WORKING TEMPERATURE:-40°C ~60°C

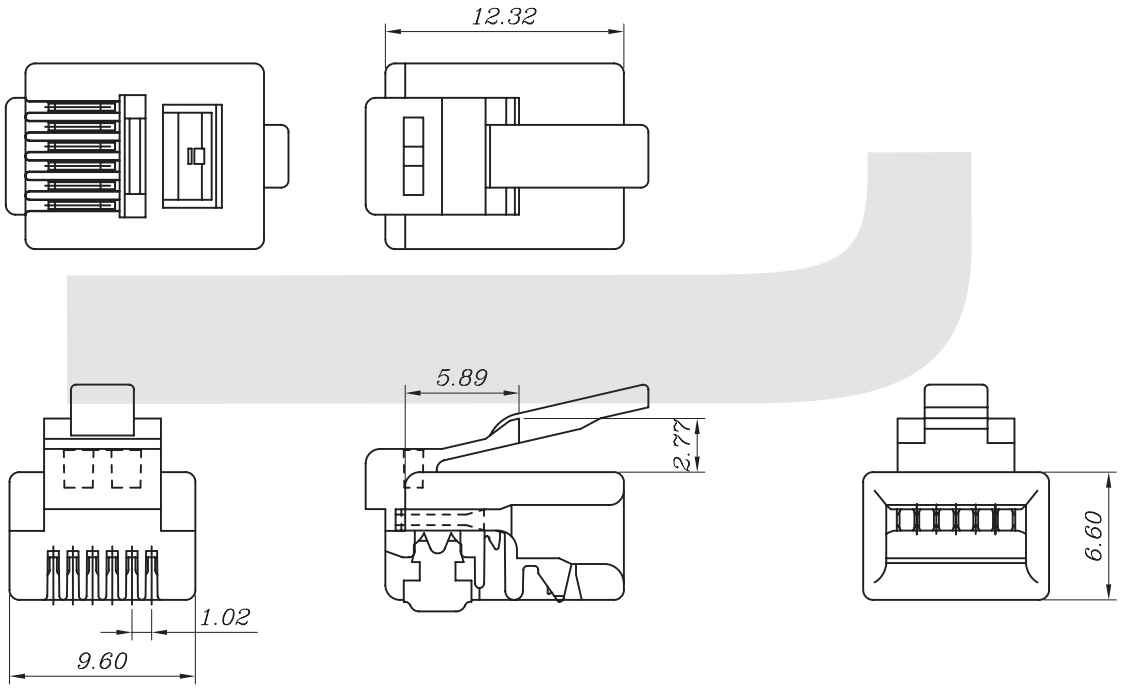

ORDER INFORMATION

KLS12-RJ12 - 6P6C XX - X X

Part Number

Point NO.	Gold Thickness	Gold style	Color
6P6C Point 6P4C Point 6P2C Point	01-Fu" 02-3u" 03-6u" 04-15u" 05-30u" 06-50u	E = 2 forks Z = 3 forks	Transparent or other

Modular Plugs Series

KLS12-RJ12B-6P6C



ELECTRICAL :
CURRENT RATING:1.5AMPS
VOLTAGE RATING:125VAC
WITHSTANDING VOLTAGE:AC1000V RMS 50Hz or 60Hz 1Min
INSULATION RESISTANCE:100MEGOHMS MIN
CONTACT RESISTANCE:39MILLMHOS MAX

MECHANICAL
CABLE TO PLUG TENSILE STRENGTH:7.7Kg MINI
DURABILITY:750MATING CYCLES MINI

MATERIAL
HOUSING: POLYCARBONATE (PC)UL 94V-0 OR UL 94V-2
CONTACT: PHOSPHOR BRONZE,HARD GOLD PLATED OVER NICKEL
SHIELDINJG:0.25mm THICKNESS COPPER ALLOY WITH TIN PLATED
GOLD PLATING:3u INCH,6u INCH,15u INCH,30u INCH,50u INCH
WORKING TEMPERATURE : -40°C ~80°C

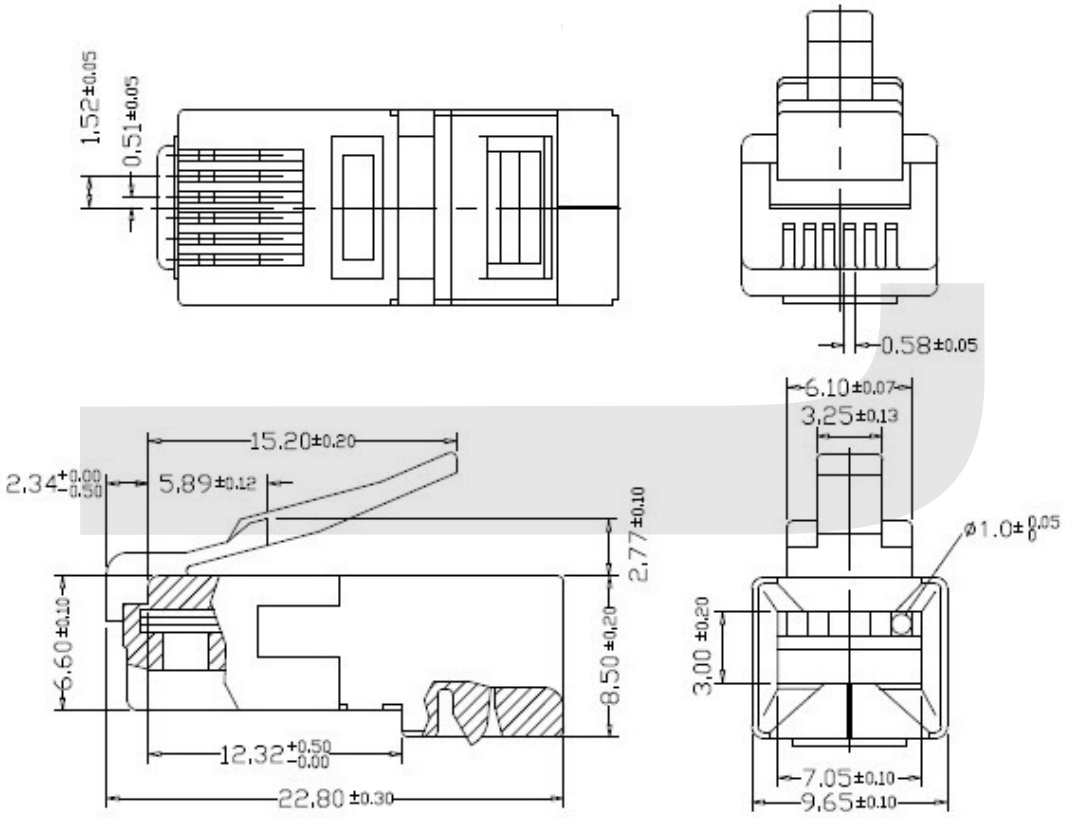

ORDER INFORMATION

KLS12-RJ12B - 6P6C XX - X X

Part Number

Point NO.	Gold Thickness	Gold style	Color
6P6C Point 6P4C Point 6P2C Point	01-Fu" 02-3u" 03-6u" 04-15u" 05-30u" 06-50u	E = 2 forks Z = 3 forks	Transparent or other

Modular Plugs Series

KLS12-RJ12C-6P6C



MATERIAL

1. Housing :Polycarbonate(pc) UL 94V-0 or UL 94V-2
2. Contact :Phosphor Bronze,Hard Gold plated over nickel
3. Shieldinjg:0.25mm Thickness Copper Alloy With Tin plated
4. Gold plating:3u inch,6u inch,15u inch,30u inch,50u inch

ELECTRICAL

1. Current Rating:1.5 Amps
2. Voltage Rating:125 Volts AC
3. Insulation Resistance:100 Megohms Min.
4. Contact Resistance:39 Millmhos Max.
5. Withstanding Voltage:1000VAC RMS 50Hz or 60Hz 1 Min.

MECHANICAL

CABLE TO PLUG TENSILE STRENGTH:7.7Kg MINI
DURABILITY:750MATING CYCLES MINI
WORKING TEMPERATURE:-40°C ~60°C

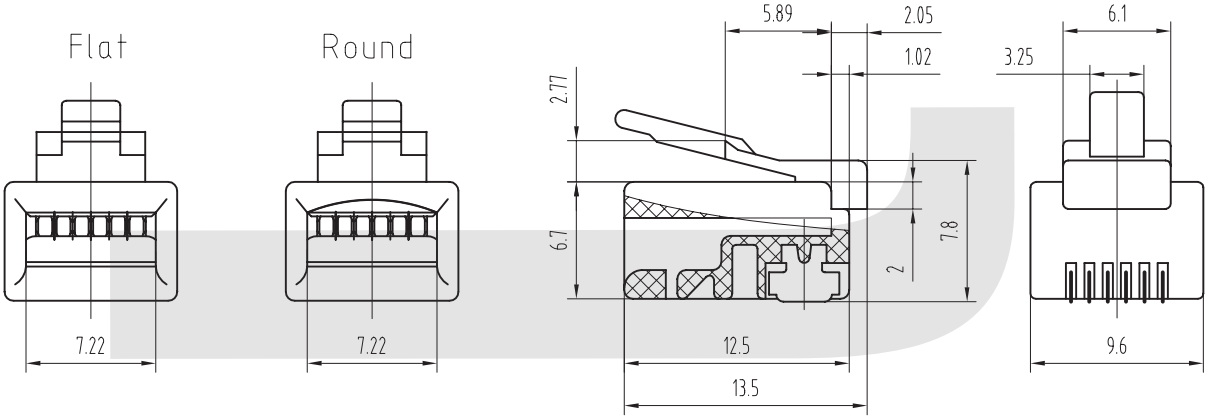

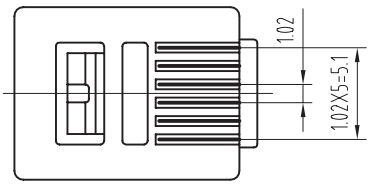

BLADE:

Type	A	B	C	D	E
Drawing					

ORDER INFORMATION

KLS12-RJ12C - 6P6C XX - X X X X

Part Number

Point NO.	Gold Thickness	Blade style	Color	Shielded	Hatchl
6P6C Point 6P4C Point 6P2C Point	01-Fu" 02-3u" 03-6u" 04-15u" 05-30u" 06-50u	1=A Type 2=B Type 3=C Type 4=D Type 5=E Type	Transparent or other	0=No shielded 1=With shielded	1=Round Hatch 2=Flat Hatch

Modular Plugs Series

KLS12-167-6P6C UK Plugs Series

MATERIAL

1.Housing: PBT UL 94V-0
2.Contact: Phosphor Bronze, Hard Gold plated over nickel
3.Shieldinjg: 0.25mm Thickness Copper Alloy With Tin plated
4.Gold plating: 3u, 6u, 15u, 30u, 50u



ELECTRICAL

1.Current Rating:1.5 A
2.Voltage Rating:125 V AC
3.Insulation Resistance:100 MΩ Min.
4.Contact Resistance:30MΩ Max.
5.Withstanding Voltage:1000VAC RMS 50Hz or 60Hz 1 Min.

MECHANICAL

Cable to plug tensile strength: 7.7Kg Min
Durability: 600Mating cycles Min
Working temperature: -40°C ~ 70°C

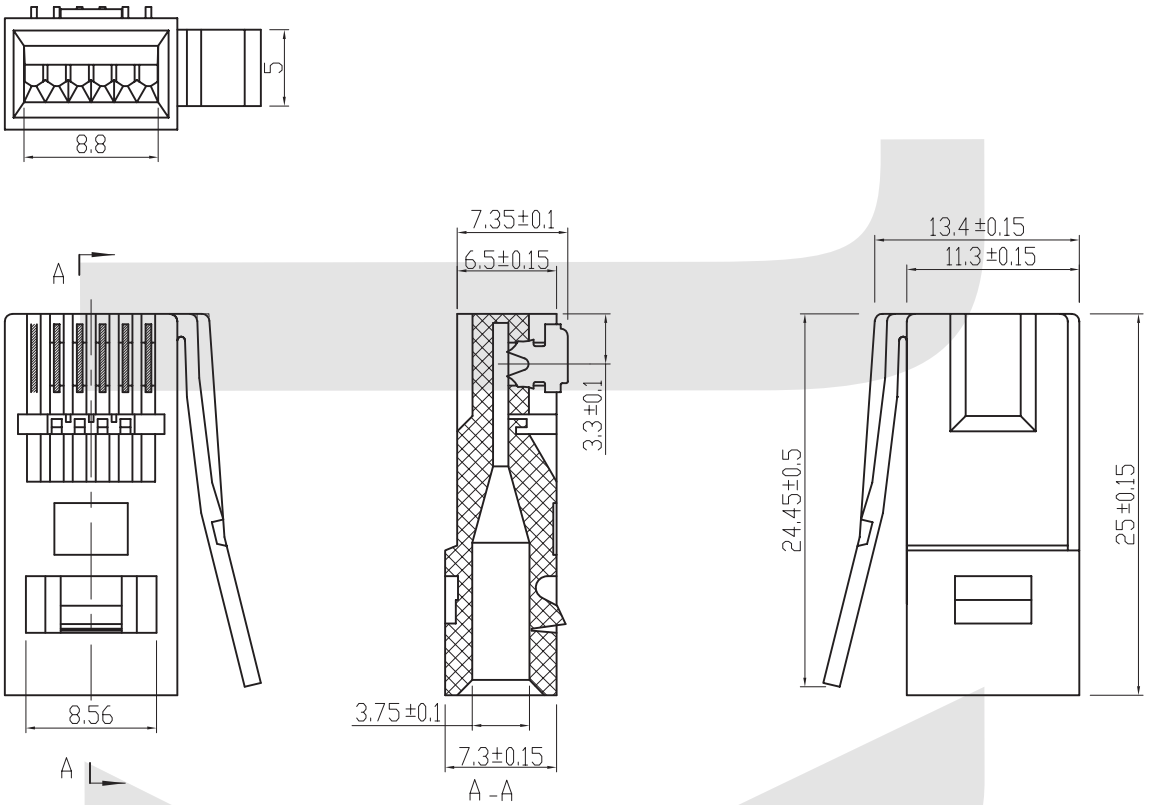

ORDER INFORMATION

KLS12-167 -6P6C-01

Series No.

Point NO.
6P6C Point
6P4C Point
6P2C Point

Gold Thickness
01-Fu"
02-3u"
03-6u"
04-15u"
05-30u"
06-50u

Modular Plugs Series

KLS12-RJ46-10P10C

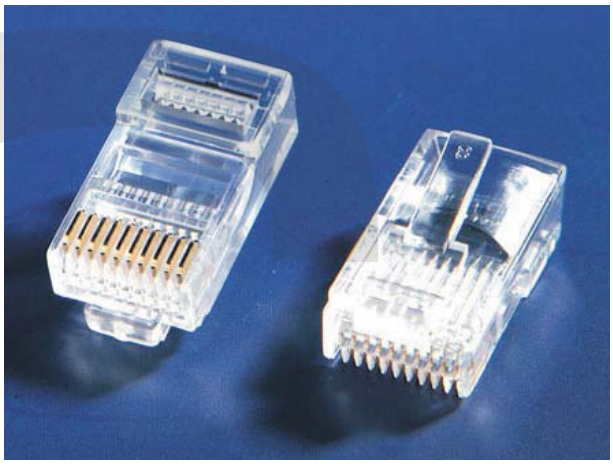

MATERIAL
1. Housing :Polycarbonate(pc) UL 94V-0 or UL 94V-2
2. Contact :Phosphor Bronze,Hard Gold plated over nickel
3.Shieldinjg:0.25mm Thickness Copper Alloy With Tin plated
4.Gold plating:3u inch,6u inch,15u inch,30u inch,50u inch

ELECTRICAL
1.Current Rating:1.5 Amps
2.Voltage Rating:125 Volts AC
3.Insulation Resistance:100 Megohms Min.
4.Contact Resistance:39 Millmhos Max.
5.Withstanding Voltage:1000VAC RMS 50Hz or 60Hz 1 Min.

MECHANICAL
CABLE TO PLUG TENSILE STRENGTH:7.7Kg MINI
DURABILITY:750MATING CYCLES MINI
WORKING TEMPERATURE:-40°C ~60°C

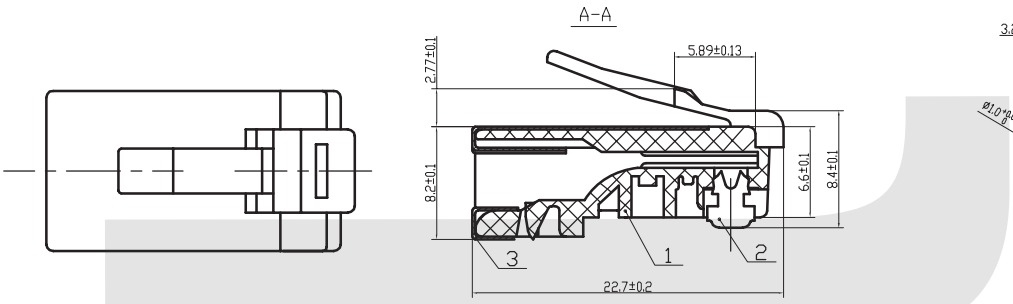

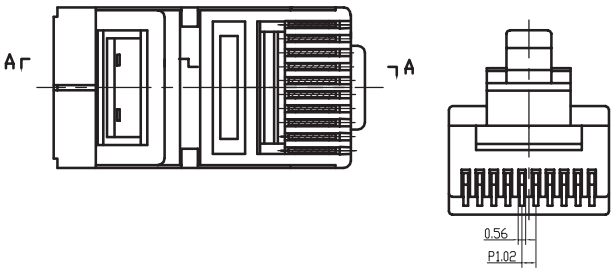

BLADE:

Type	A	B	C	D	E
Drawing					

ORDER INFORMATION

KLS12-RJ46- 10P10C XX - X X X X

Part Number

Point NO.	Gold Thickness	Blade style	Color	Shielded	Shell
10P10C Point 10P8C Point 10P6C Point 10P4C Point	01-Fu" 02-3u" 03-6u" 04-15u" 05-30u" 06-50u	1=A Type 2=B Type 3=C Type 4=D Type 5=E Type	Transparent or other	0=No shielded 1=With shielded	1=Steel 2=Copper shell

Modular Plugs Series

KLS12-RJ45C-8P8C

MATERIAL

1. Housing :Polycarbonate(pc) UL 94V-0 or UL 94V-2
2. Contact :Phosphor Bronze,Hard Gold plated over nickel
3. Shieldinjg:0.25mm Thickness Copper Alloy With Tin plated
4. Gold plating:3u inch,6u inch,15u inch,30u inch,50u inch



ELECTRICAL

1. Current Rating:1.5 Amps
2. Voltage Rating:125 Volts AC
3. Insulation Resistance:100 Megohms Min.
4. Contact Resistance:39 Millmhos Max.
5. Withstanding Voltage:1000VAC RMS 50Hz or 60Hz 1 Min.

MECHANICAL

CABLE TO PLUG TENSILE STRENGTH:7.7Kg MINI
DURABILITY:750MATING CYCLES MINI
WORKING TEMPERATURE:-40°C ~60°C

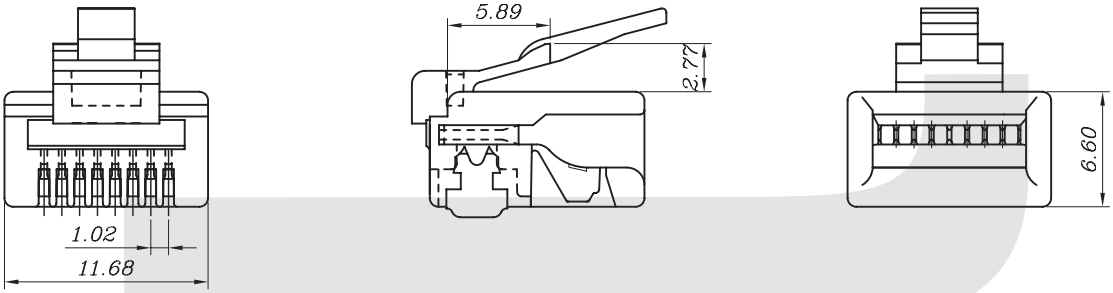

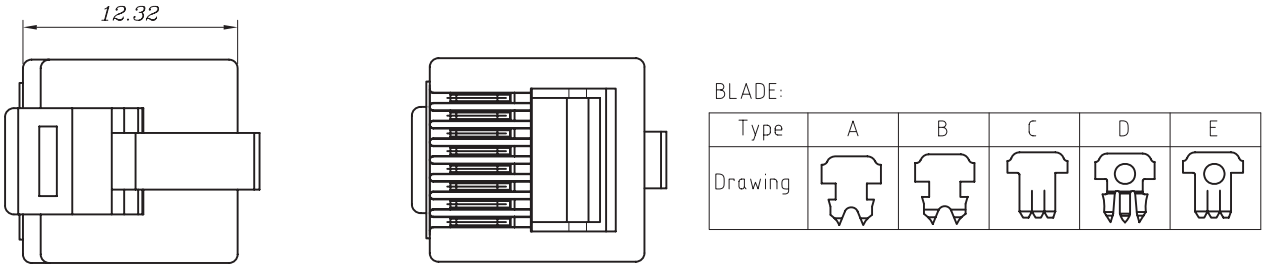

BLADE:

Type	A	B	C	D	E
Drawing					

ORDER INFORMATION

KLS12-RJ45C - 8P8C XX - X X X X

Part Number

Point NO.	Gold Thickness	Blade style	Color	Shielded	Hatchl
8P8C Point 8P6C Point 8P4C Point 8P2C Point	01-Fu" 02-3u" 03-6u" 04-15u" 05-30u" 06-50u	1=A Type 2=B Type 3=C Type 4=D Type 5=E Type	Transparent or other	0=No shielded 1=With shielded	1=Round Hatch 2=Flat Hatch

Modular Plugs Series

KLS12-RJ11B-4P4C

ELECTRICAL :
CURRENT RATING:1.5AMPS
VOLTAGE RATING:125VAC
WITHSTANDING VOLTAGE:AC1000V RMS 50Hz or 60Hz 1Min
INSULATION RESISTANCE:100MEGOHMS MIN
CONTACT RESISTANCE:39MILLMHOS MAX

MECHANICAL
CABLE TO PLUG TENSILE STRENGTH:7.7Kg MINI
DURABILITY:750MATING CYCLES MINI

MATERIAL
HOUSING: POLYCARBONATE (PC)UL 94V-0 OR UL 94V-2
CONTACT: PHOSPHOR BRONZE,HARD GOLD PLATED OVER NICKEL
SHIELDINJG:0.25mm THICKNESS COPPER ALLOY WITH TIN PLATED
GOLD PLATING:3u INCH,6u INCH,15u INCH,30u INCH,50u INCH
WORKING TEMPERATURE : -40°C ~80°C



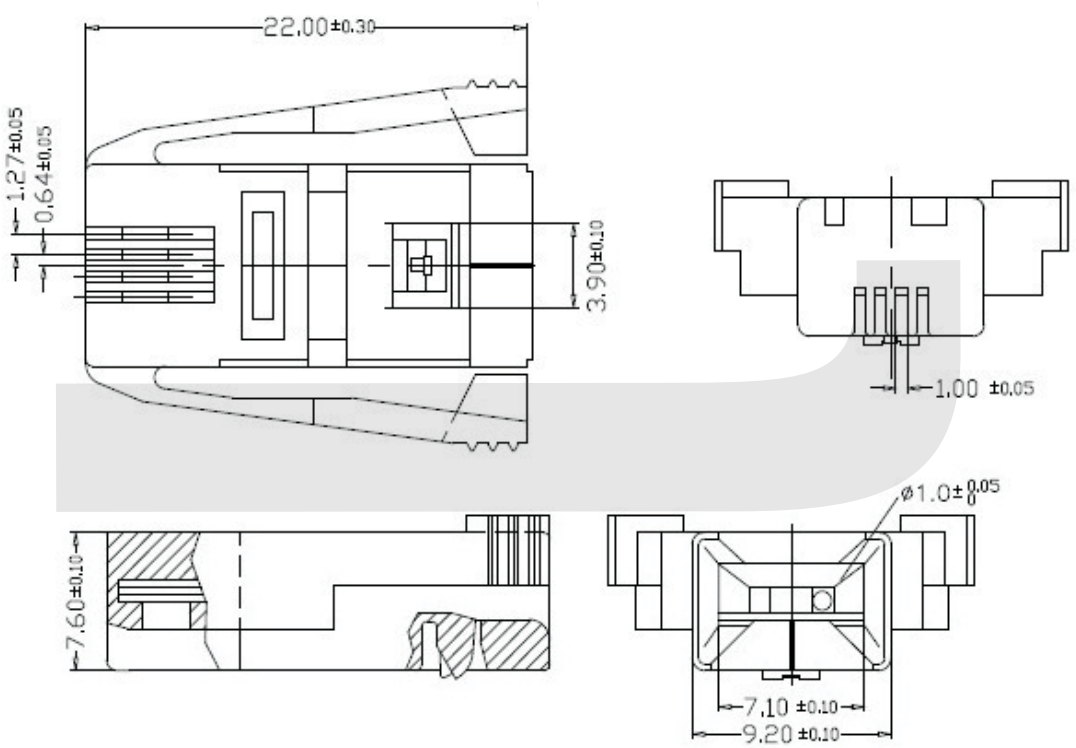

ORDER INFORMATION

KLS12-RJ11B - 4P4C XX - X X

Part Number

Point NO.	Gold Thickness	Gold style	Color
4P4C Point 4P2C Point	01-Fu" 02-3u" 03-6u" 04-15u" 05-30u" 06-50u	E = 2 forks Z = 3 forks	Transparent or other

Modular Plugs Series

KLS12-RJ45-8P8C

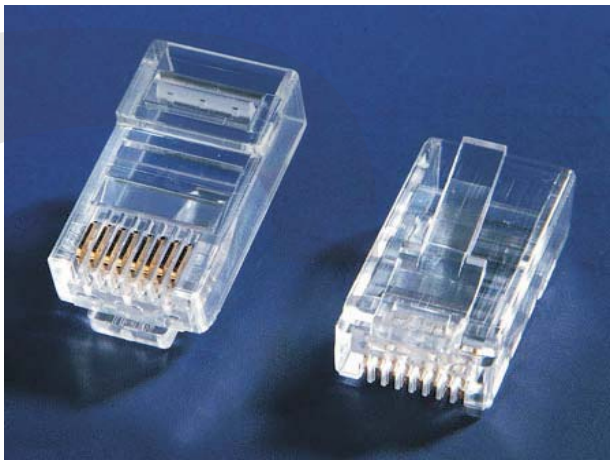

MATERIAL
1. Housing :Polycarbonate(pc) UL 94V-0 or UL 94V-2
2. Contact :Phosphor Bronze,Hard Gold plated over nickel
3.Shieldinjg:0.25mm Thickness Copper Alloy With Tin plated
4.Gold plating:3u inch,6u inch,15u inch,30u inch,50u inch

ELECTRICAL
1.Current Rating:1.5 Amps
2.Voltage Rating:125 Volts AC
3.Insulation Resistance:100 Megohms Min.
4.Contact Resistance:39 Millmhos Max.
5.Withstanding Voltage:1000VAC RMS 50Hz or 60Hz 1 Min.

MECHANICAL
CABLE TO PLUG TENSILE STRENGTH:7.7Kg MINI
DURABILITY:750MATING CYCLES MINI
WORKING TEMPERATURE:-40°C ~60°C

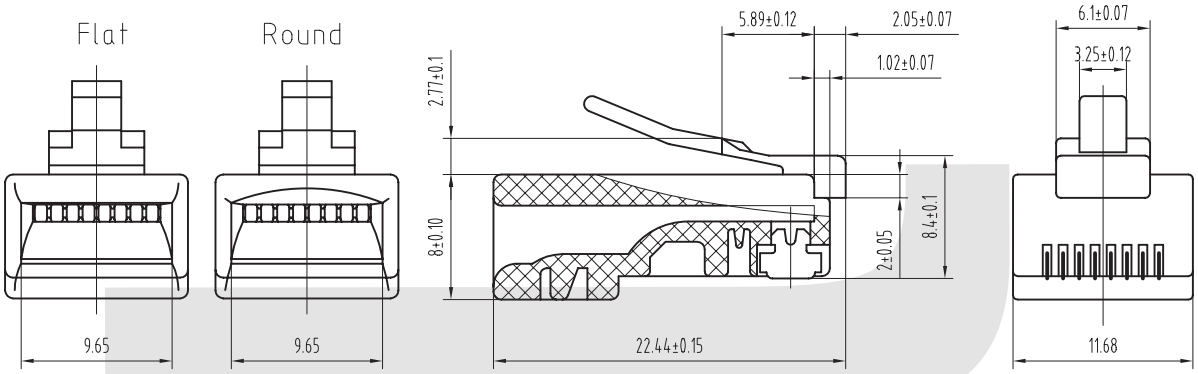

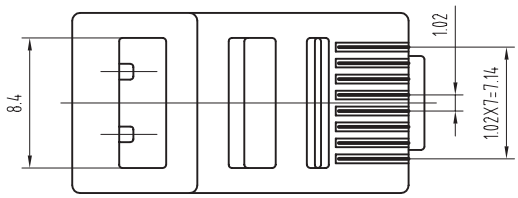

BLADE:

Type	A	B	C	D	E
Drawing					

ORDER INFORMATION

KLS12-RJ45 - 8P8C XX - X X X X

Part Number

Point NO.	Gold Thickness	Blade style	Color	Shielded	Hatch
8P8C Point 8P6C Point 8P4C Point 8P2C Point	01-Fu" 02-3u" 03-6u" 04-15u" 05-30u" 06-50u	1=A Type 2=B Type 3=C Type 4=D Type 5=E Type	Transparent or other	0=No shielded 1=With shielded	1=Round Hatch 2=Flat Hatch

Modular Plugs Series

KLS12-RJ45B-8P8C

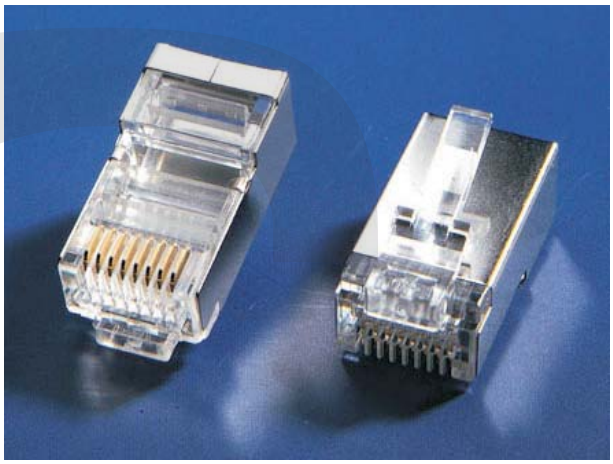

MATERIAL

1. Housing :Polycarbonate(pc) UL 94V-0 or UL 94V-2
2. Contact :Phosphor Bronze,Hard Gold plated over nickel
3. Shieldinjg:0.25mm Thickness Copper Alloy With Tin plated
4. Gold plating:3u inch,6u inch,15u inch,30u inch,50u inch

ELECTRICAL

1. Current Rating:1.5 Amps
2. Voltage Rating:125 Volts AC
3. Insulation Resistance:100 Megohms Min.
4. Contact Resistance:39 Millmhos Max.
5. Withstanding Voltage:1000VAC RMS 50Hz or 60Hz 1 Min.

MECHANICAL

CABLE TO PLUG TENSILE STRENGTH:7.7Kg MINI
DURABILITY:750MATING CYCLES MINI
WORKING TEMPERATURE:-40°C ~60°C

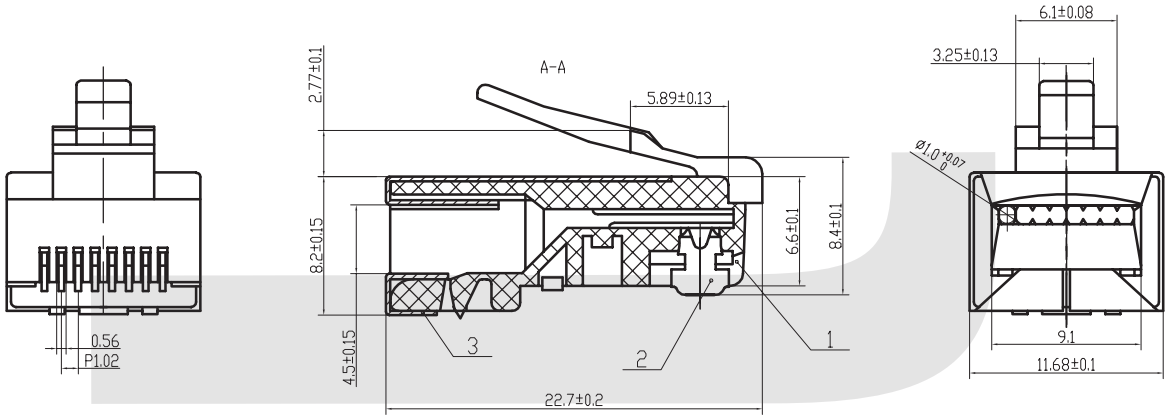

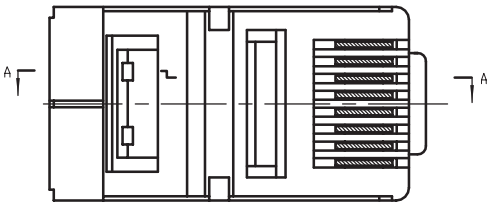

BLADE:

Type	A	B	C	D	E
Drawing					

ORDER INFORMATION

KLS12-RJ45B- 8P8C XX - X X X X

Part Number

Point NO.	Gold Thickness	Blade style	Color	Shielded	Shell
8P8C Point 8P6C Point 8P4C Point 8P2C Point	01-Fu" 02-3u" 03-6u" 04-15u" 05-30u" 06-50u	1=A Type 2=B Type 3=C Type 4=D Type 5=E Type	Transparent or other	0=No shielded 1=With shielded	1=Steel 2=Copper shell

Modular Plugs Series

KLS12-RJ46B-10P10C



ELECTRICAL :

1. VOLTAGE RATING: 125 VAC RMS.
2. CURRENT RATING : 1.5 AMP
3. CONTACT RESISTANCE : 30 MILLIOHMS MAX.
4. INSULATION RESISTANCE : 500 MEGOHMS MIN @500 VDC
5. DIELECTRIC WITHSTANDING RESISTANCE : 1000 VAC RMS. 50Hz 1 MINUTE

MECHANICAL

1. DURABILITY : 750 CYCLES MIN
2. PCB RETENTION PRE-SOLDER : 1 LB MIN

MATERIAL

1. HOUSING MATERIAL : GLASS FILLED PLYESTER UL94V-0ABS、 PBT、 NYLON
2. HOUSING COLOR : BLACK、GRAY、IVORY、WHITE OR OTHERS
3. CONTACT MATERIAL : PHOSPHOR BRONZE φ0.46mm
4. PLATING : GOLD PLATING OVER NICKEL.GOLD PLATING THICKNESS 1.5u"/3u"/6u"/15u"/30u"/50u"
5. SHIELD : 0.23 THICKNESS BRASS WITH NICKEL PLATED

ENVIRONMENTAL

1. STORAGE :-40℃~80℃

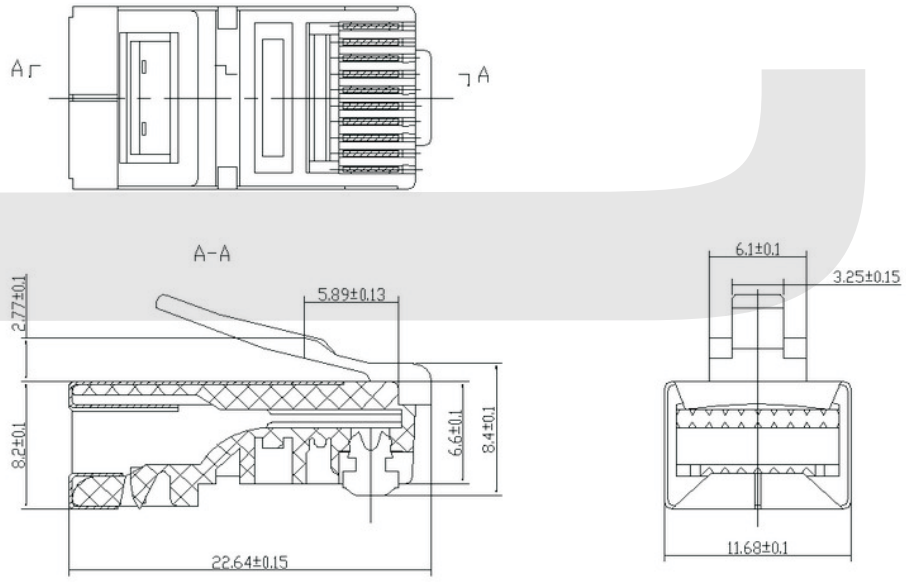

ORDER INFORMATION

KLS12-RJ46B- 10P10C XX - X X X X

Part Number

Point NO.	Gold Thickness	Blade style	Color	Shielded	Shell
10P10C Point 10P8C Point 10P6C Point 10P4C Point	01-Fu" 02-3u" 03-6u" 04-15u" 05-30u" 06-50u	1=A Type 2=B Type 3=C Type 4=D Type 5=E Type	Transparent or other	0=No shielded 1=With shielded	1=Steel 2=Copper shell

Modular Plugs Series

KLS12-RJ11-4P4C

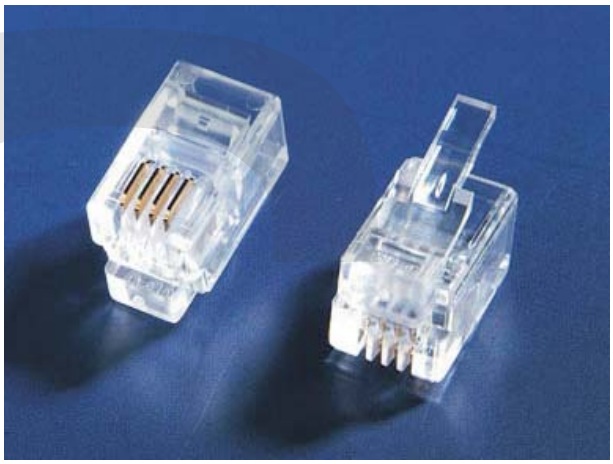

MATERIAL
1. Housing :Polycarbonate(pc) UL 94V-0 or UL 94V-2
2. Contact :Phosphor Bronze,Hard Gold plated over nickel
3.Shieldinjg:0.25mm Thickness Copper Alloy With Tin plated
4.Gold plating:3u inch,6u inch,15u inch,30u inch,50u inch

ELECTRICAL
1.Current Rating:1.5 Amps
2.Voltage Rating:125 Volts AC
3.Insulation Resistance:100 Megohms Min.
4.Contact Resistance:39 Millmhos Max.
5.Withstanding Voltage:1000VAC RMS 50Hz or 60Hz 1 Min.

MECHANICAL
CABLE TO PLUG TENSILE STRENGTH:7.7Kg MINI
DURABILITY:750MATING CYCLES MINI
WORKING TEMPERATURE:-40°C ~60°C

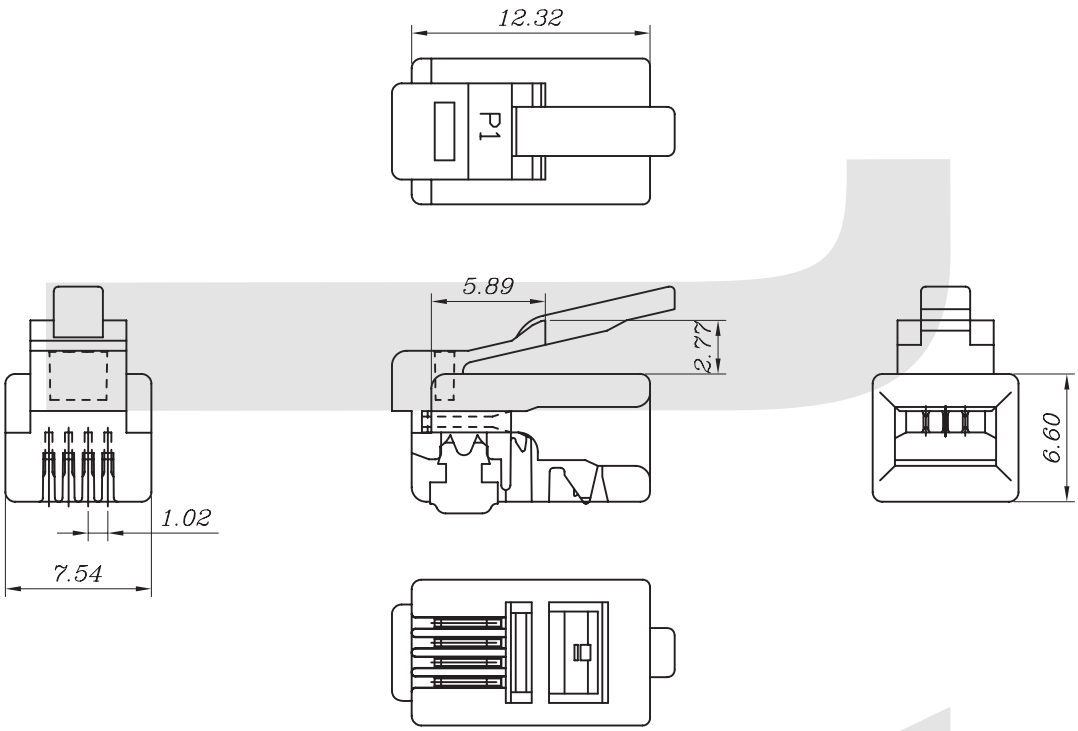

ORDER INFORMATION

KLS12-RJ11 - 4P4C XX - X X

Part Number

Point NO.	Gold Thickness	Gold style	Color
4P4C Point 4P2C Point	01-Fu" 02-3u" 03-6u" 04-15u" 05-30u" 06-50u	E = 2 forks Z = 3 forks	Transparent or other

Modular Plugs Series

KLS12-MP01-CAT6-8P8C



MATERIAL
1. Housing :Polycarbonate(pc) UL 94V-0 or UL 94V-2
2. Contact :Phosphor Bronze,Hard Gold plated over nickel
3.Shieldinjg:0.25mm Thickness Copper Alloy With Tin plated
4.Gold plating:3u inch,6u inch,15u inch,30u inch,50u inch

ELECTRICAL
1.Current Rating:1.5 Amps
2.Voltage Rating:125 Volts AC
3.Insulation Resistance:100 Megohms Min.
4.Contact Resistance:39 Millmhos Max.
5.Withstanding Voltage:1000VAC RMS 50Hz or 60Hz 1 Min.

MECHANICAL
CABLE TO PLUG TENSILE STRENGTH:7.7Kg MINI
DURABILITY:750MATING CYCLES MINI
WORKING TEMPERATURE:-40°C ~60°C

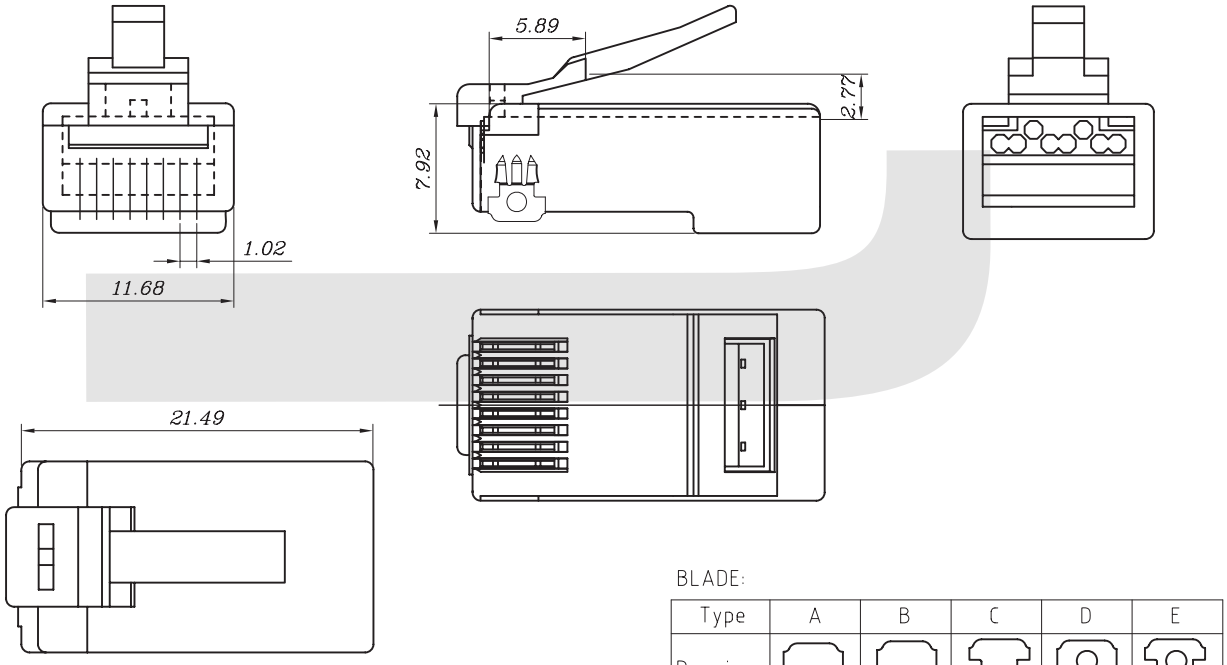

BLADE:

Type	A	B	C	D	E
Drawing					

ORDER INFORMATION

KLS12-MP01-CAT6 - 8P8C XX - X X X X

Part Number

Point NO.	Gold Thickness	Blade style	Color	Shielded	Hatchl
8P8C Point 8P6C Point 8P4C Point 8P2C Point	01-Fu" 02-3u" 03-6u" 04-15u" 05-30u" 06-50u	1=A Type 2=B Type 3=C Type 4=D Type 5=E Type	Transparent or other	0=No shielded 1=With shielded	1=Round Hatch 2=Flat Hatch

Modular Plugs Series

KLS12-MP02-CAT6-8P8C



MATERIAL
1. Housing :Polycarbonate(pc) UL 94V-0 or UL 94V-2
2. Contact :Phosphor Bronze,Hard Gold plated over nickel
3.Shieldinjg:0.25mm Thickness Copper Alloy With Tin plated
4.Gold plating:3u inch,6u inch,15u inch,30u inch,50u inch

ELECTRICAL
1.Current Rating:1.5 Amps
2.Voltage Rating:125 Volts AC
3.Insulation Resistance:100 Megohms Min.
4.Contact Resistance:39 Millmhos Max.
5.Withstanding Voltage:1000VAC RMS 50Hz or 60Hz 1 Min.

MECHANICAL
CABLE TO PLUG TENSILE STRENGTH:7.7Kg MINI
DURABILITY:750MATING CYCLES MINI
WORKING TEMPERATURE:-40°C ~60°C

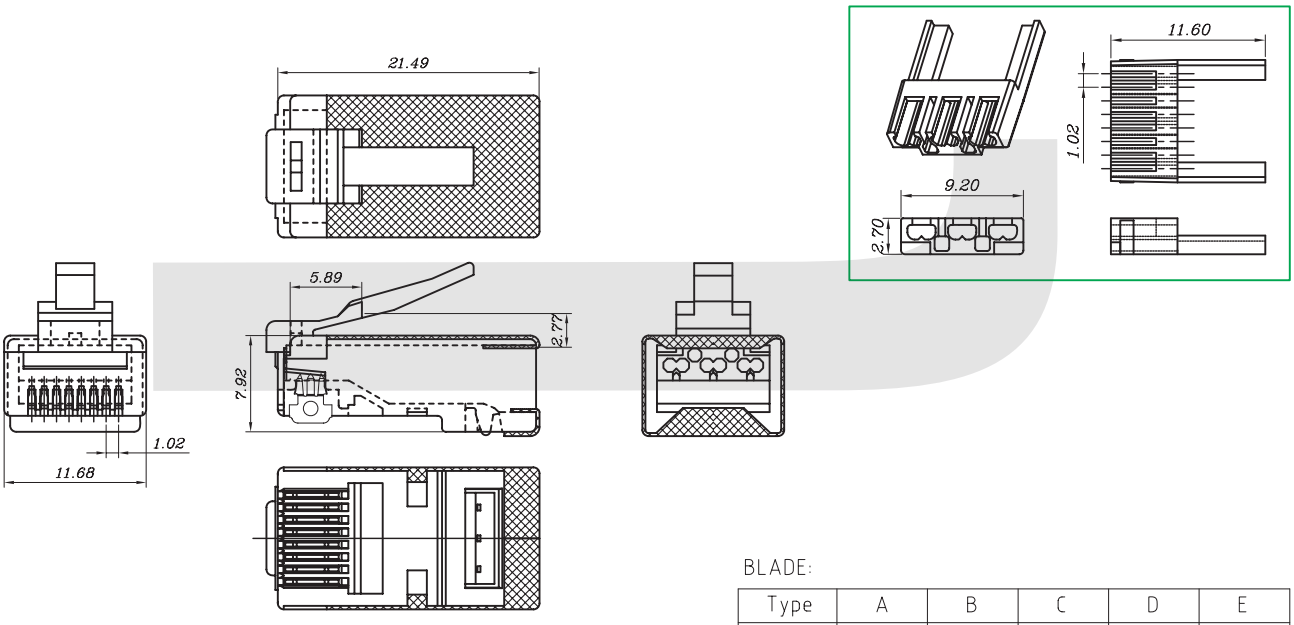

BLADE:

Type	A	B	C	D	E
Drawing					

ORDER INFORMATION

KLS12-MP02-CAT6 - 8P8C XX - X X X X

Part Number

Point NO.	Gold Thickness	Blade style	Color	Shielded	Shell
8P8C Point 8P6C Point 8P4C Point 8P2C Point	01-Fu" 02-3u" 03-6u" 04-15u" 05-30u" 06-50u	1=A Type 2=B Type 3=C Type 4=D Type 5=E Type	Transparent or other	0=No shielded 1=With shielded	1=Steel 2=Copper Shell

Modular Plugs Series

KLS12-MP03-CAT6-8P8C

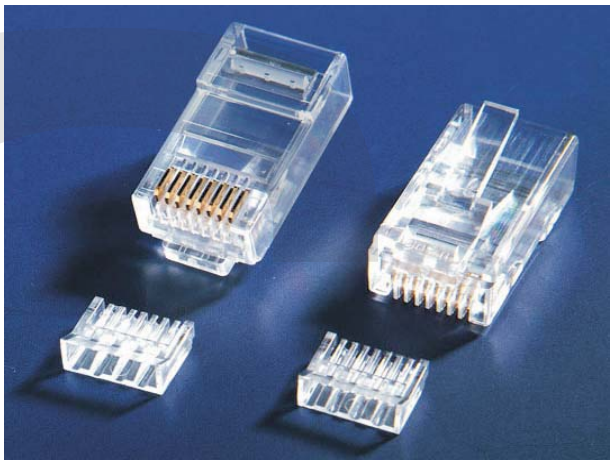

MATERIAL

1. Housing :Polycarbonate(pc) UL 94V-0 or UL 94V-2
2. Contact :Phosphor Bronze,Hard Gold plated over nickel
3. Shieldinjg:0.25mm Thickness Copper Alloy With Tin plated
4. Gold plating:3u inch,6u inch,15u inch,30u inch,50u inch

ELECTRICAL

1. Current Rating:1.5 Amps
2. Voltage Rating:125 Volts AC
3. Insulation Resistance:100 Megohms Min.
4. Contact Resistance:39 Millmhos Max.
5. Withstanding Voltage:1000VAC RMS 50Hz or 60Hz 1 Min.

MECHANICAL

CABLE TO PLUG TENSILE STRENGTH:7.7Kg MINI
DURABILITY:750MATING CYCLES MINI
WORKING TEMPERATURE:-40°C ~60°C

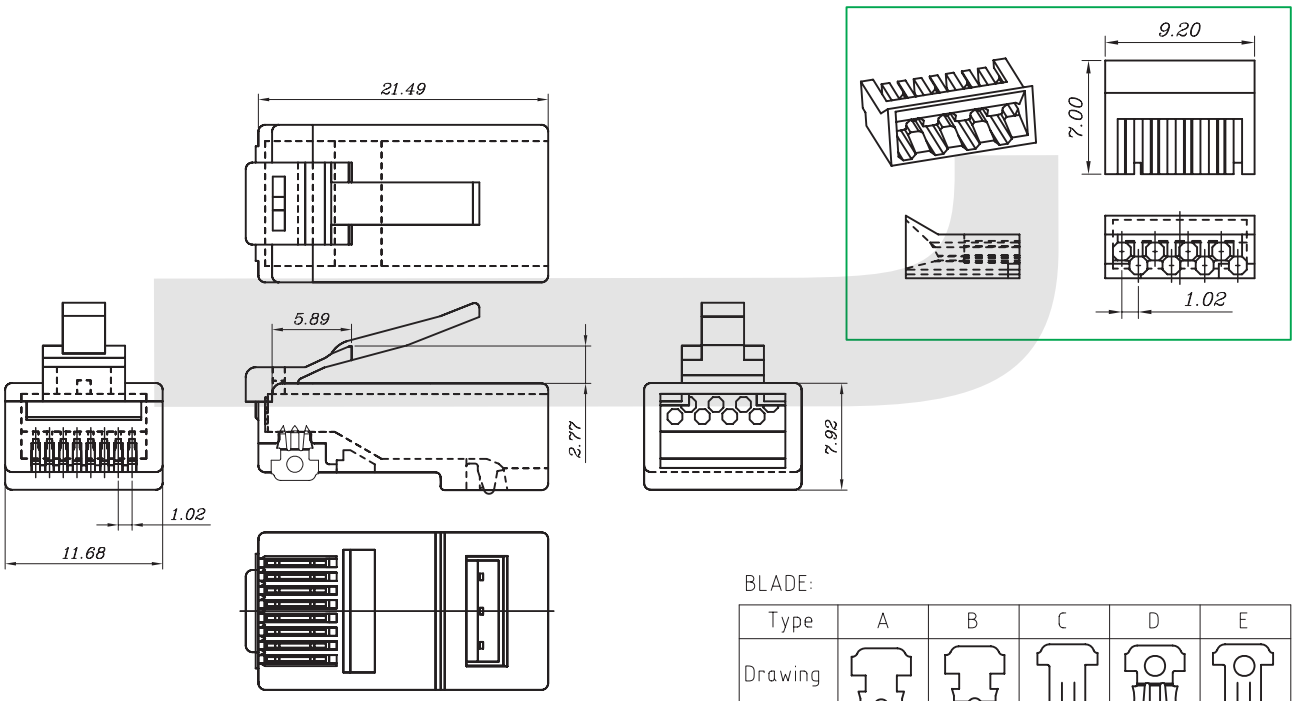

BLADE:

Type	A	B	C	D	E
Drawing					

ORDER INFORMATION

KLS12-MP03-CAT6 - 8P8C XX - X X X X

Part Number

Point NO.	Gold Thickness	Blade style	Color	Shielded	Shell
8P8C Point 8P6C Point 8P4C Point 8P2C Point	01-Fu" 02-3u" 03-6u" 04-15u" 05-30u" 06-50u	1=A Type 2=B Type 3=C Type 4=D Type 5=E Type	Transparent or other	0=No shielded 1=With shielded	1=Steel 2=Copper Shell

Modular Plugs Series

KLS12-RJ45-V

MATERIAL: ABS



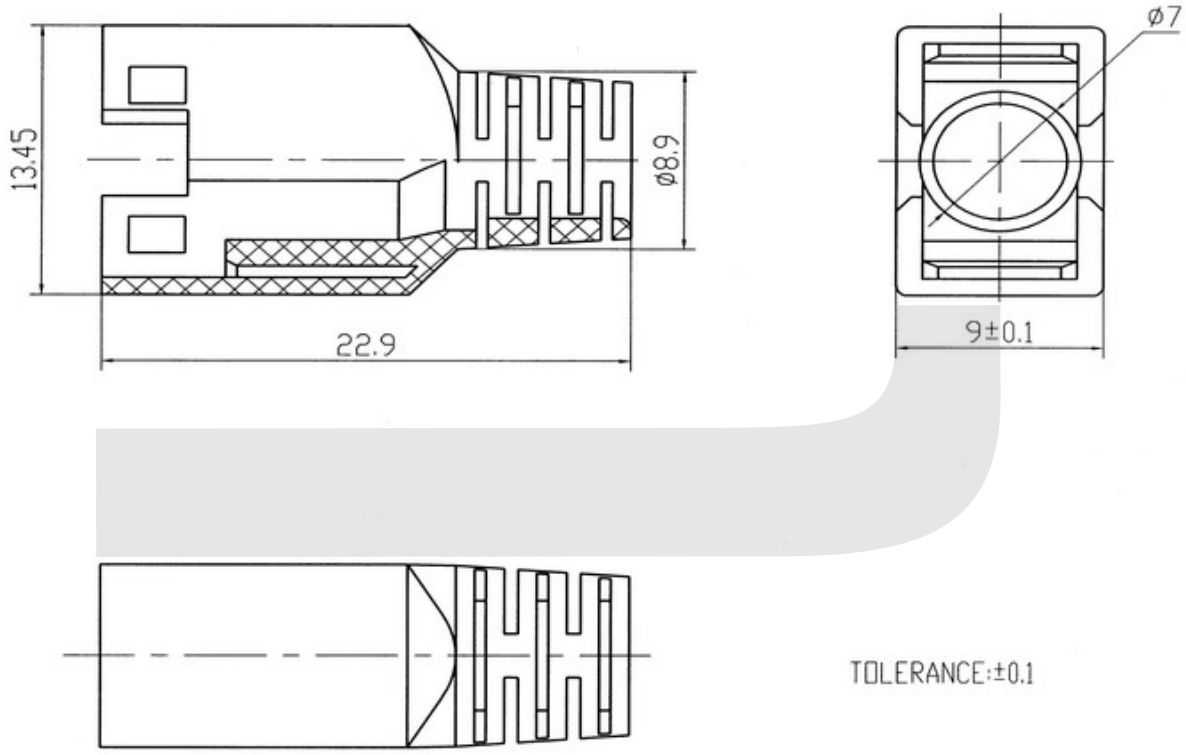

ORDER INFORMATION

KLS12-RJ45-V-4

Color.	
1.	Green
2.	Red
3.	Yellow
4.	Blue
5.	Gray

Series No.

Modular Plugs Series

KLS12-RJ45-N

MATERIAL: ABS+PVC

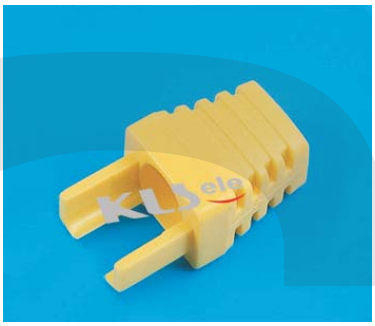

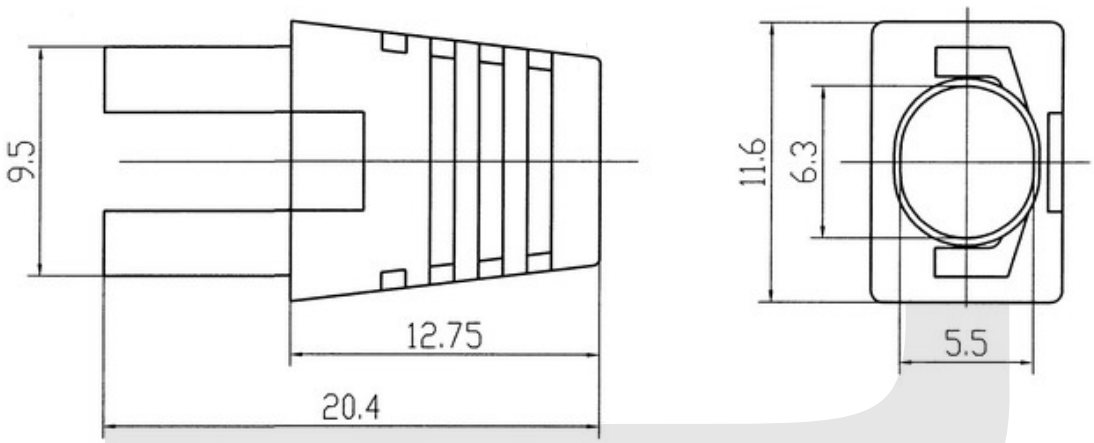

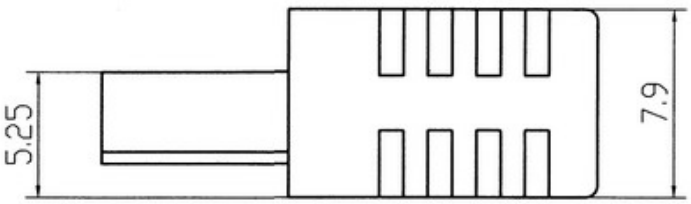

TOLERANCE:±0.1

ORDER INFORMATION

KLS12-RJ45-N-3

Color.	
1.	Green
2.	Red
3.	Yellow
4.	Blue
5.	Gray

Series No.

Modular Plugs Series

KLS12-RJ45-M

MATERIAL: PVC



ORDER INFORMATION

KLS12-RJ45-M-2

Color.	
1.	Green
2.	Red
3.	Yellow
4.	Blue
5.	Gray

Series No.

Modular Plugs Series

KLS12-RJ45-B

MATERIAL: PVC



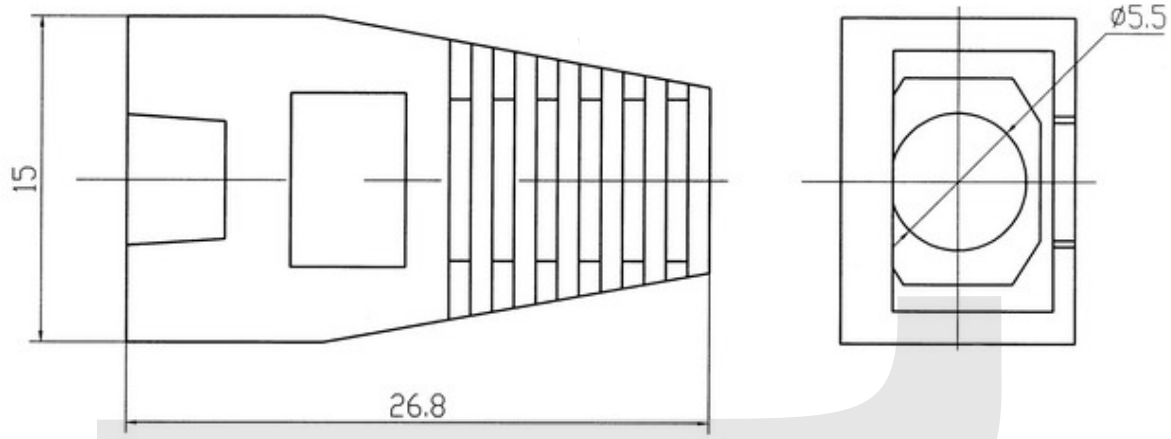

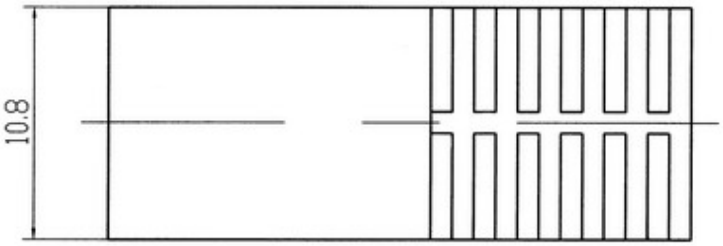

TOLERANCE:±0.1

ORDER INFORMATION

KLS12-RJ45-B-4

Color.	
1.	Green
2.	Red
3.	Yellow
4.	Blue
5.	Gray

Series No.

Modular Plugs Series

KLS12-MP04-CAT6-8P8C

MATERIAL:

1. HOUSING MATERIAL : GLASS FILLED POLYESTER UL94V-0ABS、 PBT、 NYLON
2. HOUSING COLOR : BLACK、GRAY、IVORY、WHITE OR OTHERS
3. CONTACT MATERIAL : PHOSPHOR BRONZE φ0.46mm
4. PLATING : GOLD PLATING OVER NICKEL.GOLD PLATINGTHICKNESS 1.5u"/3u"/6u"/15u"/30u"/50u"
5. SHIELD : 0.23 THICKNESS BRASS WITH NICKEL PLATED

ELECTRICAL:

1. VOLTAGE RATING: 125 VAC RMS.
2. CURRENT RATING : 1.5 AMP
3. CONTACT RESISTANCE : 30 MILLIOHMS MAX.
4. INSULATION RESISTANCE : 500 MEGOHMS MIN @500 VDC
5. DIELECTRIC WITHSTANDING RESISTANCE : 1000 VAC RMS. 50Hz 1MINUTE

MECHANICAL:

1. DURABILITY : 750 CYCLES MIN
2. PCB RETENTION PRE-SOLDER : 1 LB MIN

ENVIRONMENTAL:

1. STORAGE :-40℃~80℃



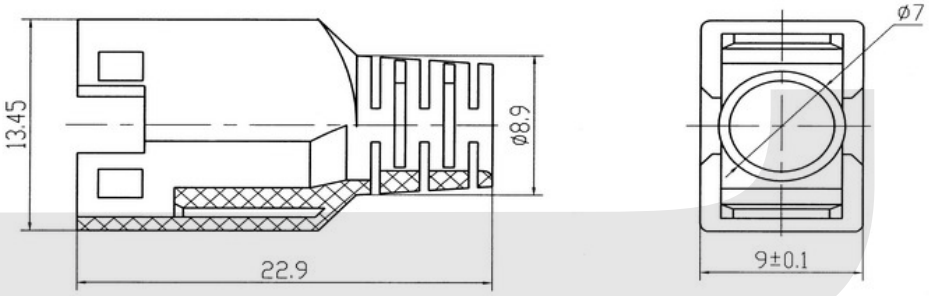

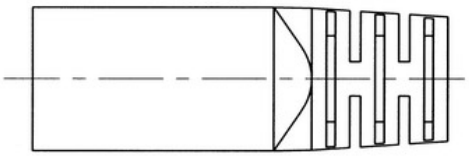

TOLERANCE:±0.1

ORDER INFORMATION

KLS12-MP04-CAT6-8P8C XX -X X X X

Part Number

Point NO.	Gold Thickness	Blade style	Color	Shielded	Shell
8P8C Point 8P6C Point 8P4C Point 8P2C Point	01-Fu" 02-3u" 03-6u" 04-15u" 05-30u" 06-50u	1=A Type 2=B Type 3=C Type 4=D Type 5=E Type	Transparent or other	0=No shielded 1=Withshielded	1=Steel 2=Copper Shell

SMT Modular Jack Series

KLS12-SMT01-8P SMT Modular Jack Series

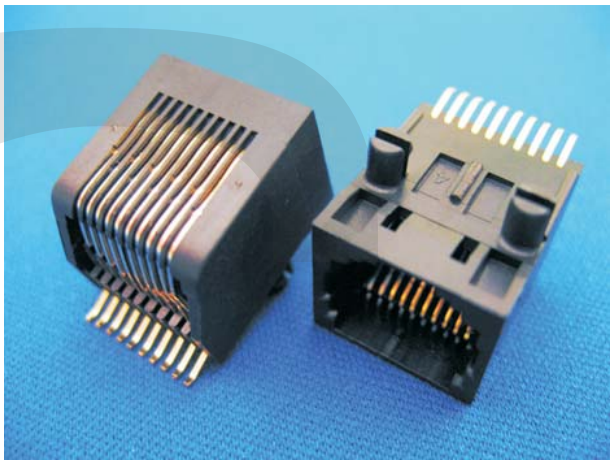

ELECTRICAL

1.Voltage Rating: 125VAC
2.Current Rating: 1.5A
3.Contact Resistance: 30MΩ Max.
4.Insulation Resistance: 500MΩ Min.@500VDC
5.Withstanding Resistance :1000VAC RMS. 50Hz 1minute

MATERIALS

1.Housing: High Temp. Thermoplastic Flammability UL 94V-0
2.Contact: Phosphor Bronze Flat Pin
3.Plating:Gold Plating over nickel in contact,Tin Planting over nickel in solder area

MECHANICAL

1.Durability: 750 cycles Min.
2.PCB Retention pre-solder: 1 LB Min.

ENVIRONMENTAL

1.Storage:-40 C ~ +80 C

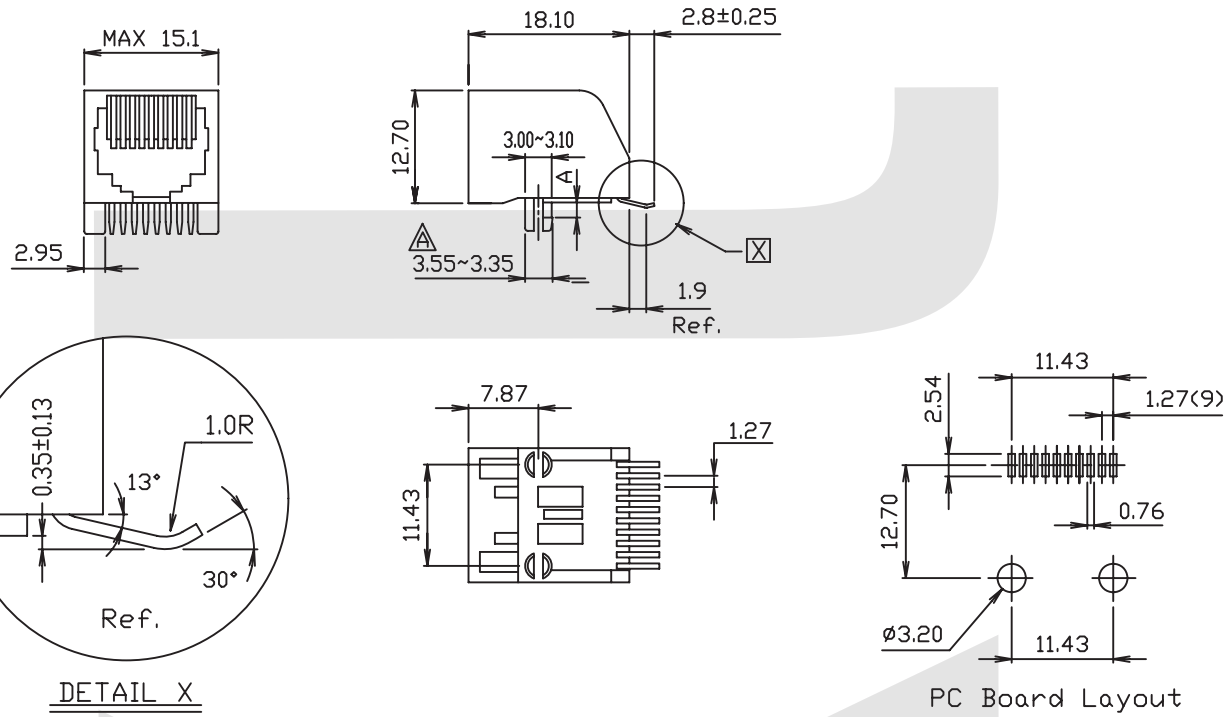

ORDER INFORMATION

KLS12-SMT01 -8P8C - 03

Part Number	Point No.	Gold Thickness
	8P8C Point	01-Fu" 03-6u" 05-30u" 06-50u

SMT Modular Jack Series

KLS12-SMT02-6P SMT Modular Jack Series With shielded

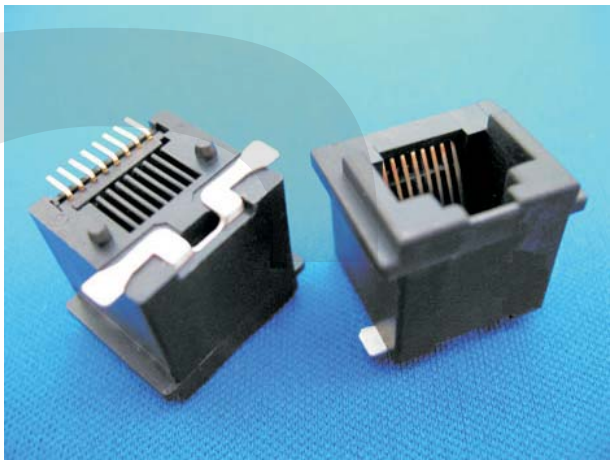

ELECTRICAL

1.Voltage Rating: 125VAC
2.Current Rating: 1.5A
3.Contact Resistance: 30MΩ Max.
4.Insulation Resistance: 500MΩ Min.@500VDC
5.Withstanding Resistance :1000VAC RMS. 50Hz 1minute

MATERIALS

1.Housing: High Temp. Thermoplastic Flammability UL 94V-0
2.Contact: Phosphor Bronze Flat Pin
3.Plating:Gold Plating over nickel in contact,Tin Planting over nickel in solder area
4.Shield: 0.23 Thickness Brass With Nickel Plated

MECHANICAL

1.Durability: 750 cycles Min.
2.PCB Retention pre-solder: 1 LB Min.

ENVIRONMENTAL

1.Storage:-40 C ~ +80 C

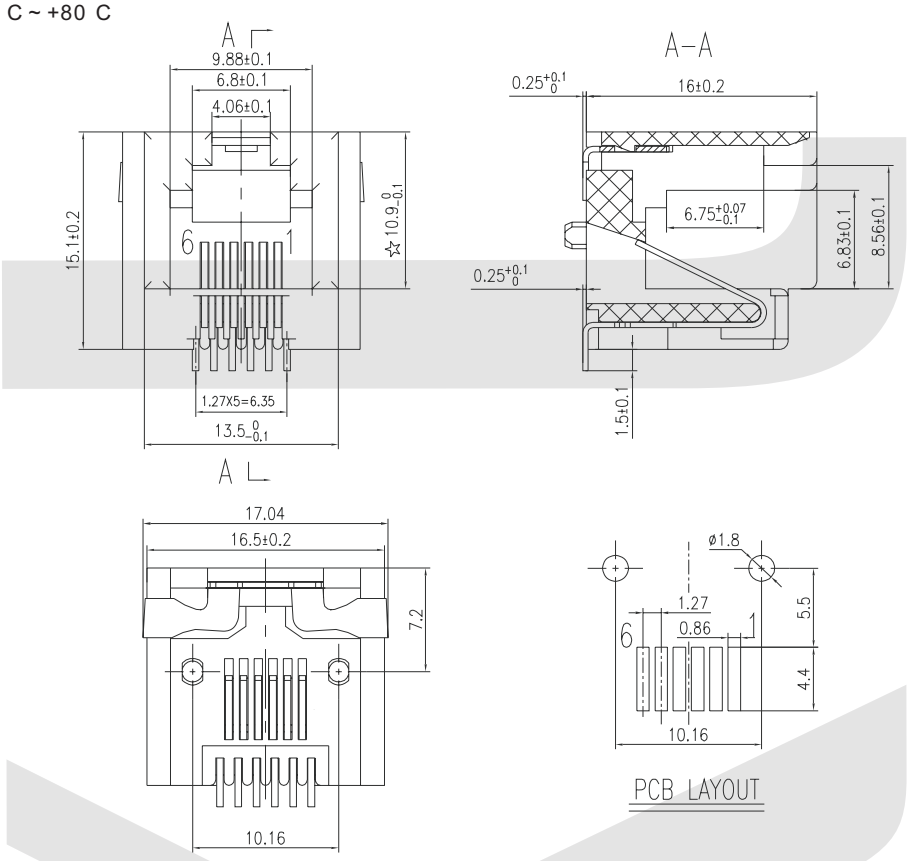

ORDER INFORMATION

KLS12-SMT02 -6P6C - 03

Part Number	Point No.	Gold Thickness
	6P6C Point	01-Fu " 03-6u " 05-30u " 06-50u

SMT Modular Jack Series

KLS12-SMT03-8P SMT Modular Jack Series With shielded

ELECTRICAL

1.Voltage Rating: 125VAC
2.Current Rating: 1.5A
3.Contact Resistance: 30MΩ Max.
4.Insulation Resistance: 500MΩ Min.@500VDC
5.Withstanding Resistance :1000VAC RMS. 50Hz 1minute

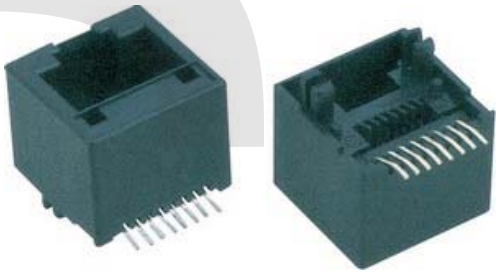

MATERIALS

1.Housing: High Temp. Thermoplastic Flammability UL 94V-0
2.Contact: Phosphor Bronze Flat Pin
3.Plating:Gold Plating over nickel in contact,Tin Planting over nickel in solder area
4.Shield: 0.23 Thickness Brass With Nickel Plated

MECHANICAL

1.Durability: 750 cycles Min.
2.PCB Retention pre-solder: 1 LB Min.

ENVIRONMENTAL

1.Storage:-40 C ~ +80 C

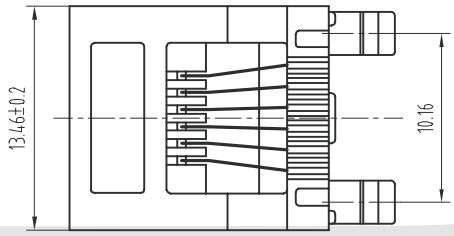

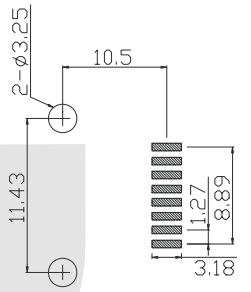

PCB LAYOUT

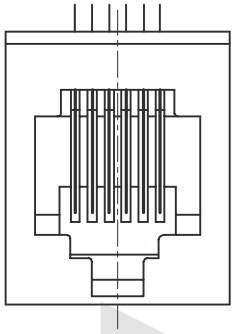

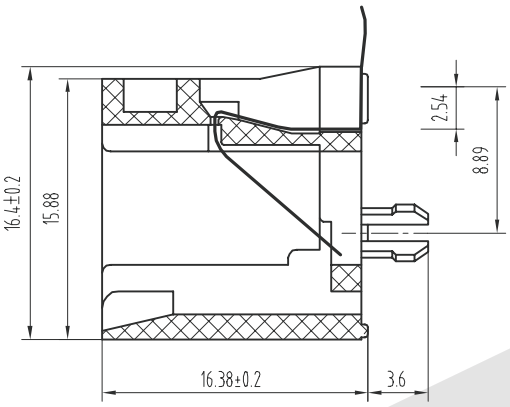

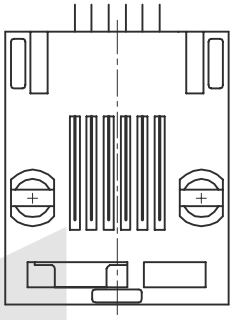

ORDER INFORMATION

KLS12-SMT03 -8P8C - 03

Part Number	Point No.	Gold Thickness
	8P8C Point	01-Fu " 03-6u " 05-30u " 06-50u

SMT Modular Jack Series

KLS12-SMT04-4P SMT Modular Jack Series With shielded

ELECTRICAL

1.Voltage Rating: 125VAC
2.Current Rating: 1.5A
3.Contact Resistance: 30MΩ Max.
4.Insulation Resistance: 500MΩ Min.@500VDC
5.Withstanding Resistance :1000VAC RMS. 50Hz 1minute

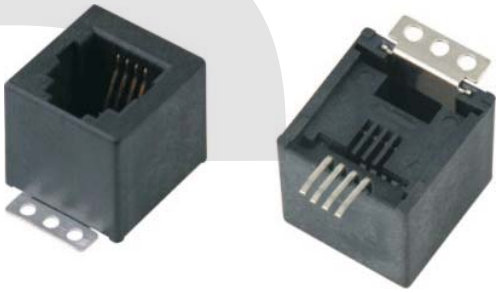

MATERIALS

1.Housing: High Temp. Thermoplastic Flammability UL 94V-0
2.Contact: Phosphor Bronze Flat Pin
3.Plating:Gold Plating over nickel in contact,Tin Planting over nickel in solder area

MECHANICAL

1.Durability: 750 cycles Min.
2.PCB Retention pre-solder: 1 LB Min.

ENVIRONMENTAL

1.Storage:-40 C ~ +80 C

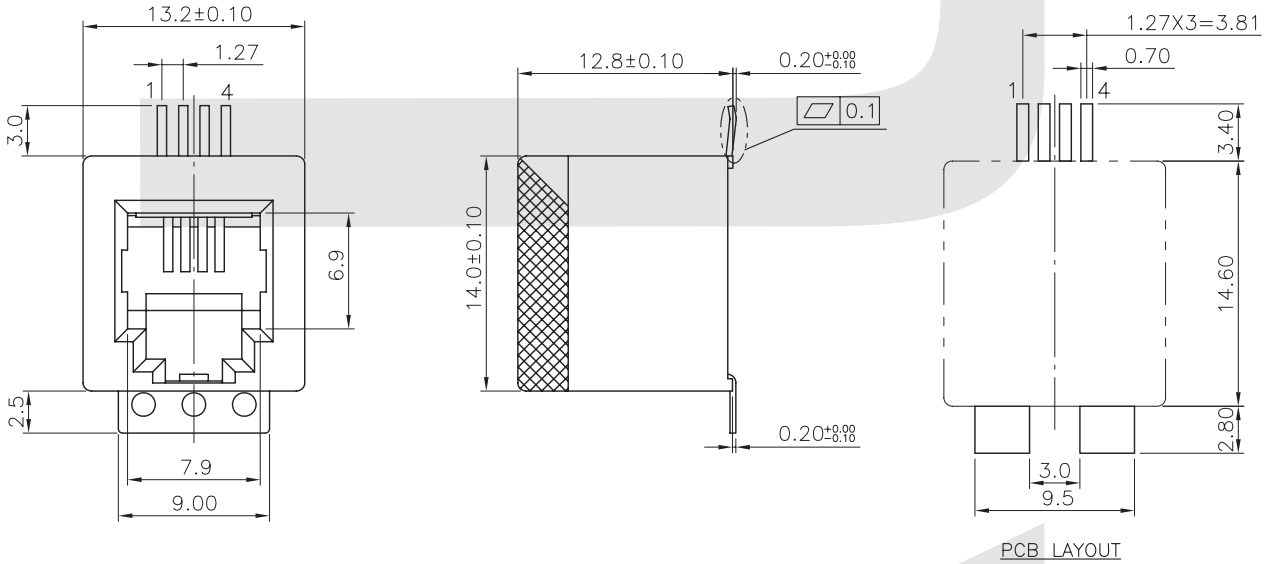

ORDER INFORMATION

KLS12-SMT04 -4P4C - 03

Part Number	Point No.	Gold Thickness
	4P4C Point	01-Fu " 03-6u " 05-30u " 06-50u

SMT Modular Jack Series

KLS12-SMT04-6P SMT Modular Jack Series With shielded

ELECTRICAL

1.Voltage Rating: 125VAC
2.Current Rating: 1.5A
3.Contact Resistance: 30MΩ Max.
4.Insulation Resistance: 500MΩ Min.@500VDC
5.Withstanding Resistance :1000VAC RMS. 50Hz 1minute



MATERIALS

1.Housing: High Temp. Thermoplastic Flammability UL 94V-0
2.Contact: Phosphor Bronze Flat Pin
3.Plating:Gold Plating over nickel in contact,Tin Planting over nickel in solder area

MECHANICAL

1.Durability: 750 cycles Min.
2.PCB Retention pre-solder: 1 LB Min.

ENVIRONMENTAL

1.Storage:-40 C ~ +80 C

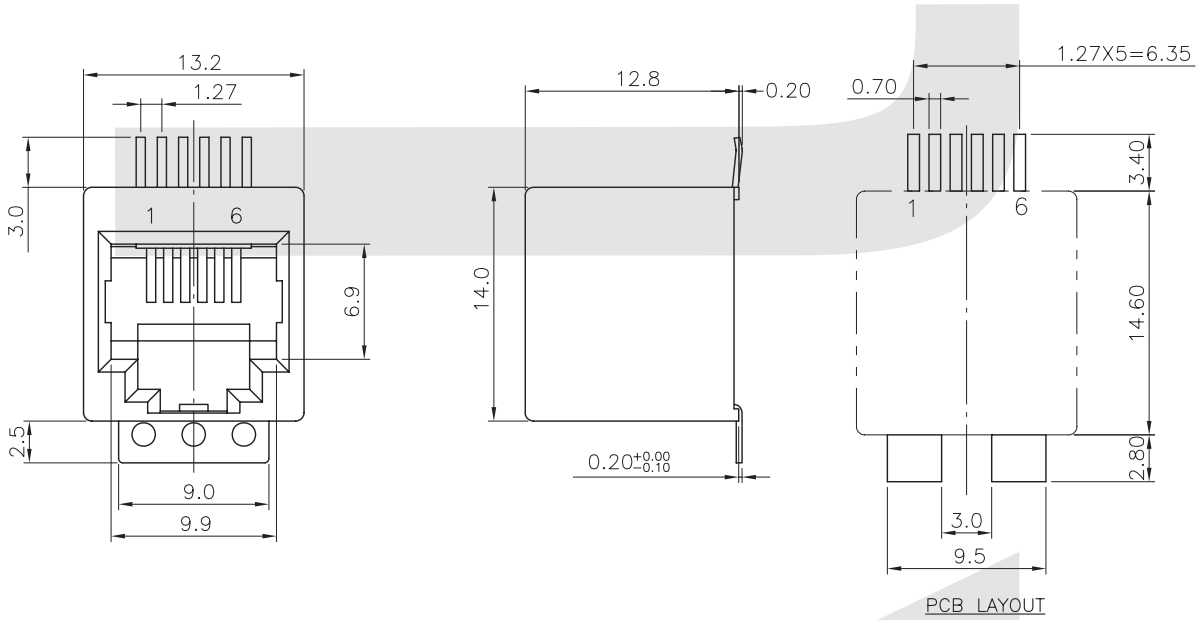

ORDER INFORMATION

KLS12-SMT04 -6P6C - 03

Part Number	Point No.	Gold Thickness
	6P6C Point 6P4C Point	01-Fu " 03-6u " 05-30u " 06-50u

SMT Modular Jack Series

KLS12-SMT04-8P SMT Modular Jack Series With shielded

ELECTRICAL

1.Voltage Rating: 125VAC
2.Current Rating: 1.5A
3.Contact Resistance: 30MΩ Max.
4.Insulation Resistance: 500MΩ Min.@500VDC
5.Withstanding Resistance :1000VAC RMS. 50Hz 1minute

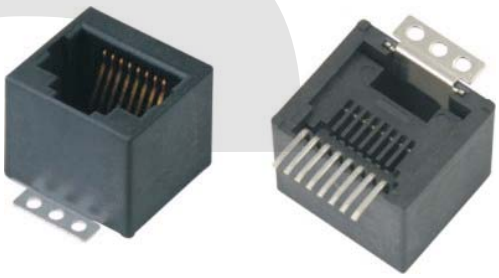

MATERIALS

1.Housing: High Temp. Thermoplastic Flammability UL 94V-0
2.Contact: Phosphor Bronze Flat Pin
3.Plating:Gold Plating over nickel in contact,Tin Planting over nickel in solder area
4.Shield: 0.23 Thickness Brass With Nickel Plated

MECHANICAL

1.Durability: 750 cycles Min.
2.PCB Retention pre-solder: 1 LB Min.

ENVIRONMENTAL

1.Storage:-40 C ~ +80 C

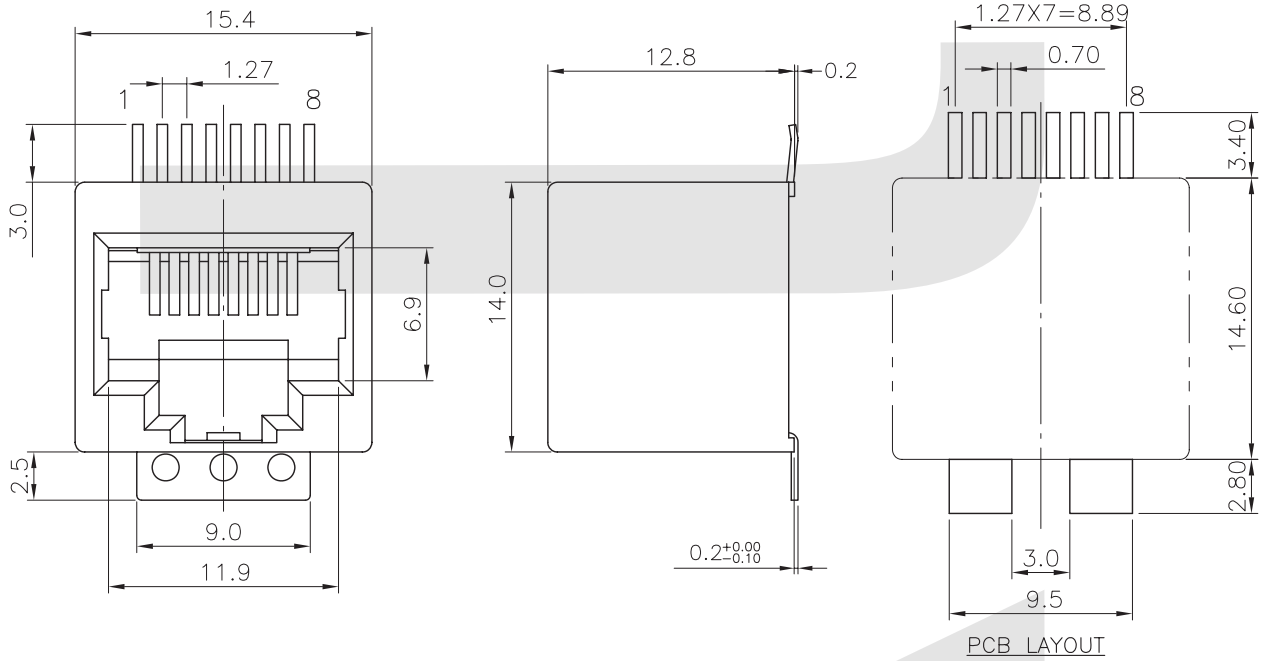

ORDER INFORMATION

KLS12-SMT04 -8P8C - 03

Part Number	Point No.	Gold Thickness
	8P8C Point	01-Fu " 03-6u " 05-30u " 06-50u

SMT Modular Jack Series

KLS12-SMT05-8P (RJ45 Jack)

MATERIAL:
1. HOUSING MATERIAL : GLASS FILLED PLYESTER UL94V-0ABS、PBT、 NYLON
2. HOUSING COLOR : BLACK、GRAY、IVORY、WHITE OR OTHERS
3. CONTACT MATERIAL : PHOSPHOR BRONZE φ0.46mm
4. PLATING : GOLD PLATING OVER NICKEL.GOLD PLATINGTHICKNESS 1.5u"/3u"/6u"/15u"/30u"/50u"
5. SHIELD : 0.23 THICKNESS BRASS WITH NICKEL PLATED

ELECTRICAL:
1. VOLTAGE RATING: 125 VAC RMS.
2. CURRENT RATING : 1.5 AMP
3. CONTACT RESISTANCE : 30 MILLIOHMS MAX.
4. INSULATION RESISTANCE : 500 MEGOHMS MIN @500 VDC
5. DIELECTRIC WITHSTANDING RESISTANCE : 1000 VAC RMS. 50Hz 1MINUTE

MECHANICAL:
1. DURABILITY : 750 CYCLES MIN
2. PCB RETENTION PRE-SOLDER : 1 LB MIN

ENVIRONMENTAL:
1. STORAGE :-40℃~80℃



ORDER INFORMATION

KLS12-SMT05-8P8C - 03

Part Number	Point No.	Gold Thickness
	8P8C Point	01-Fu" 03-6u" 05-30u" 06-50u

SMT Modular Jack Series

KLS12-SMT06-6P SMT Modular Jack Series With shielded

ELECTRICAL

1.Voltage Rating: 125VAC
2.Current Rating: 1.5A
3.Contact Resistance: 30MΩ Max.
4.Insulation Resistance: 500MΩ Min.@500VDC
5.Withstanding Resistance :1000VAC RMS. 50Hz 1minute

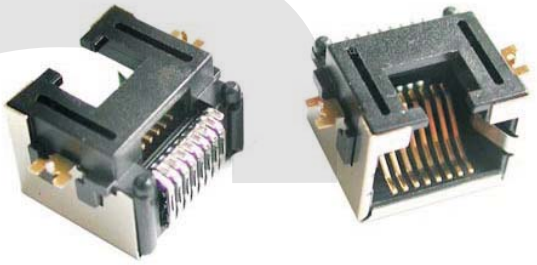

MATERIALS

1.Housing: High Temp. Thermoplastic Flammability UL 94V-0
2.Contact: Phosphor Bronze Flat Pin
3.Plating:Gold Plating over nickel in contact,Tin Planting over nickel in solder area
4.Shield: 0.23 Thickness Brass With Nickel Plated

MECHANICAL

1.Durability: 750 cycles Min.
2.PCB Retention pre-solder: 1 LB Min.

ENVIRONMENTAL

1.Storage:-40 C ~ +80 C



PCB LAYOUT

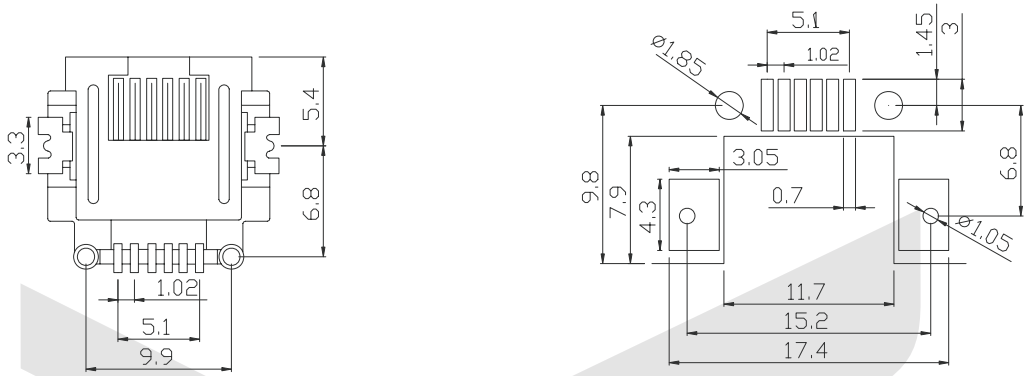

ORDER INFORMATION

KLS12-SMT06 -6P6C - 03

Part Number	Point No.	Gold Thickness
	6P6C Point	01-Fu " 03-6u " 05-30u " 06-50u

SMT Modular Jack Series

KLS12-SMT06-8P SMT Modular Jack Series With shielded

ELECTRICAL

1.Voltage Rating: 125VAC
2.Current Rating: 1.5A
3.Contact Resistance: 30MΩ Max.
4.Insulation Resistance: 500MΩ Min.@500VDC
5.Withstanding Resistance :1000VAC RMS. 50Hz 1minute

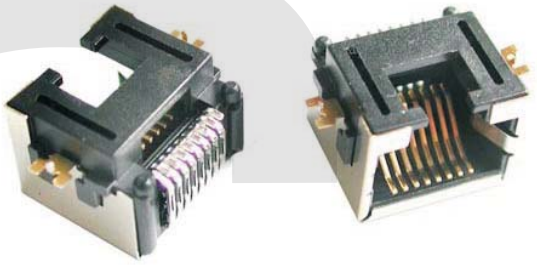

MATERIALS

1.Housing: High Temp. Thermoplastic Flammability UL 94V-0
2.Contact: Phosphor Bronze Flat Pin
3.Plating:Gold Plating over nickel in contact,Tin Planting over nickel in solder area
4.Shield: 0.23 Thickness Brass With Nickel Plated

MECHANICAL

1.Durability: 750 cycles Min.
2.PCB Retention pre-solder: 1 LB Min.

ENVIRONMENTAL

1.Storage:-40 C ~ +80 C

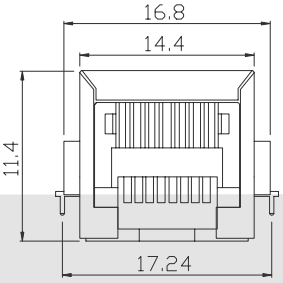

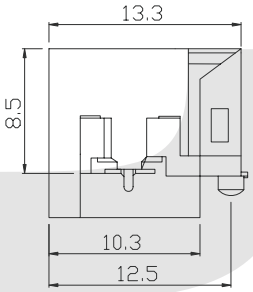

PCB LAYOUT

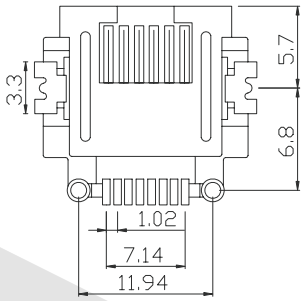

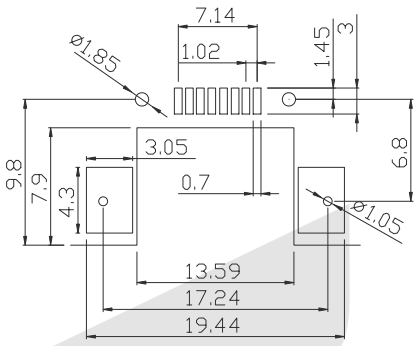

ORDER INFORMATION

KLS12-SMT06 -8P8C - 03

Part Number	Point No.	Gold Thickness
	8P8C Point	01-Fu " 03-6u " 05-30u " 06-50u

SMT Modular Jack Series

KLS12-SMT07-8P (53 SERIES)

MATERIAL:

1. HOUSING MATERIAL : GLASS FILLED PLYESTER UL94V-0ABS、PBT、 NYLON
2. HOUSING COLOR : BLACK、GRAY、IVORY、WHITE OR OTHERS
3. CONTACT MATERIAL : PHOSPHOR BRONZE φ0.46mm
4. PLATING : GOLD PLATING OVER NICKEL.GOLD PLATINGTHICKNESS 1.5u"/3u"/6u"/15u"/30u"/50u"
5. SHIELD : 0.23 THICKNESS BRASS WITH NICKEL PLATED

ELECTRICAL:

1. VOLTAGE RATING: 125 VAC RMS.
2. CURRENT RATING : 1.5 AMP
3. CONTACT RESISTANCE : 30 MILLIOHMS MAX.
4. INSULATION RESISTANCE : 500 MEGOHMS MIN @500 VDC
5. DIELECTRIC WITHSTANDING RESISTANCE : 1000 VAC RMS. 50Hz 1MINUTE

MECHANICAL:

1. DURABILITY : 750 CYCLES MIN
2. PCB RETENTION PRE-SOLDER : 1 LB MIN

ENVIRONMENTAL:

1. STORAGE :-40℃~80℃



ORDER INFORMATION

KLS12-SMT07-8P8C - 03

Part Number	Point No.	Gold Thickness
	8P8C Point	01-Fu" 03-6u" 05-30u" 06-50u

SMT Modular Jack Series

KLS12-SMT08-6P6C



MATERIAL:

1.Voltage Rating: 125VAC
2.Current Rating: 1.5A
3.Contact Resistance: 30MΩ Max.
4.Insulation Resistance: 500MΩ Min. @ 500VDC
5.Withstanding Resistance: 1000VAC RMS. 50Hz 1minute

ELECTRICAL:

1.Housing: High Temp. Thermoplastic Flammability UL 94V-0
2.Contact: Phosphor Bronze Flat Pin
3.Plating: Gold Plating over nickel in contact, Tin Planting over nickel in solder area
4.Shield: 0.23 Thickness Brass With Nickel Plated

MECHANICAL:

1. DURABILITY : 750 CYCLES MIN
2. PCB RETENTION PRE-SOLDER : 1 LB MIN

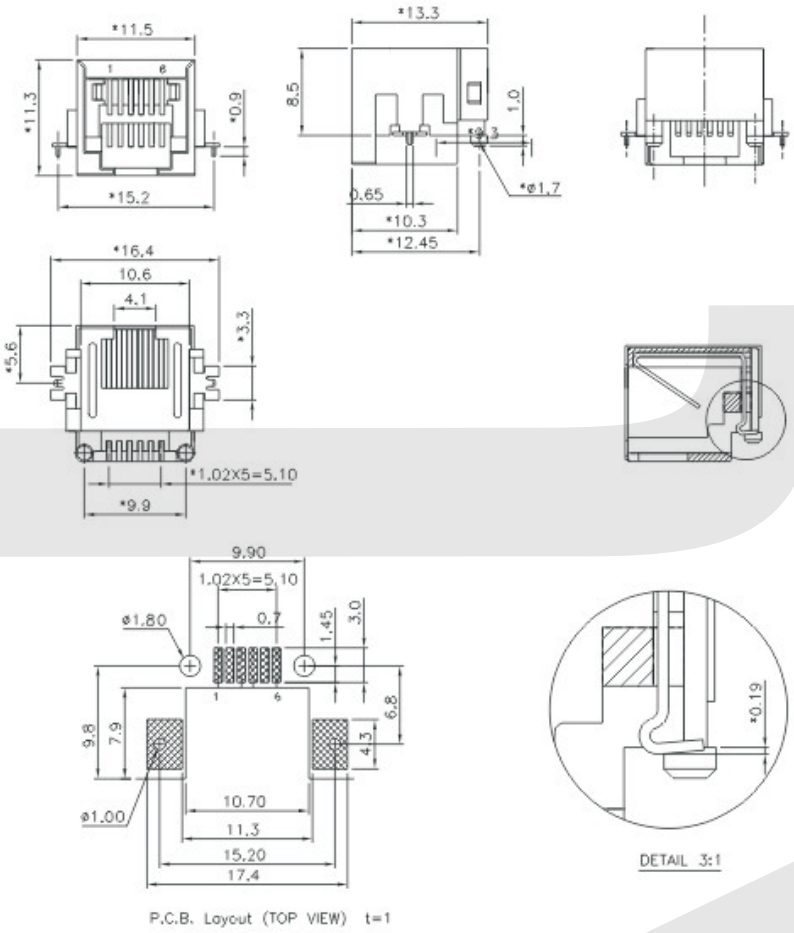

P.C.B. Layout (TOP VIEW) t=1

ORDER INFORMATION

KLS12-SMT08-6P6C - 03

Part Number	Point No .	Gold Thickness
	6P6C POINT	01-Fu "
		03-6u "
		05-30u "
		06-50u

SMT Modular Jack Series

KLS12-SMT08-8P8C



MATERIAL:

1.Voltage Rating: 125VAC
2.Current Rating: 1.5A
3.Contact Resistance: 30MΩ Max.
4.Insulation Resistance: 500MΩ Min. @ 500VDC
5.Withstanding Resistance: 1000VAC RMS. 50Hz 1minute

ELECTRICAL:

1.Housing: High Temp. Thermoplastic Flammability UL 94V-0
2.Contact: Phosphor Bronze Flat Pin
3.Plating: Gold Plating over nickel in contact, Tin Planting over nickel in solder area
4.Shield: 0.23 Thickness Brass With Nickel Plated

MECHANICAL:

1. DURABILITY : 750 CYCLES MIN
2. PCB RETENTION PRE-SOLDER : 1 LB MIN

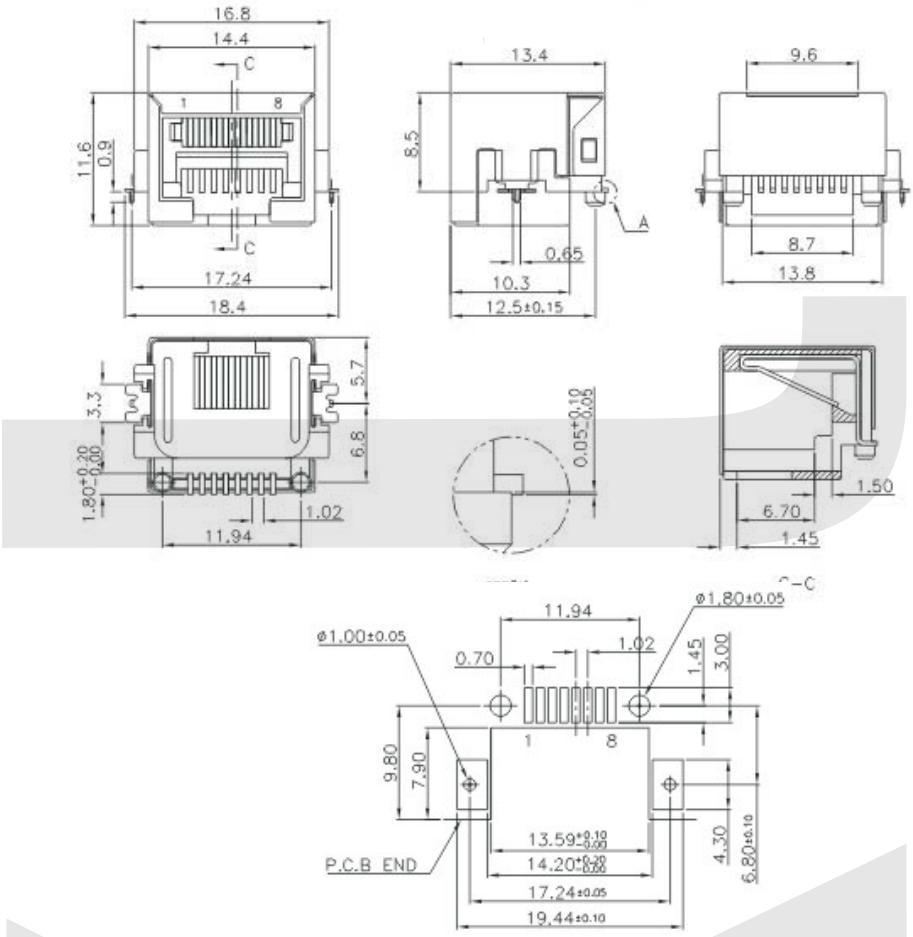

P.C.B LAYOUT(TOP VIEW)

ORDER INFORMATION

KLS12-SMT08-8P8C - 03

Part Number	Point No.	Gold Thickness
	8P8C Point	01-Fu " 03-6u " 05-30u " 06-50u

SMT Modular Jack Series

KLS12-SMT10-8P SMT Modular Jack Series With shielded

ELECTRICAL

1.Voltage Rating: 125VAC
2.Current Rating: 1.5A
3.Contact Resistance: 30MΩ Max.
4.Insulation Resistance: 500MΩ Min.@500VDC
5.Withstanding Resistance :1000VAC RMS. 50Hz 1minute

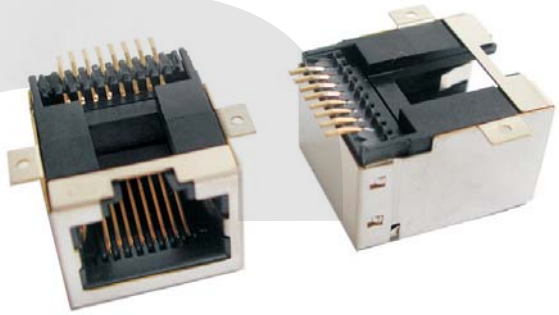

MATERIALS

1.Housing: High Temp. Thermoplastic Flammability UL 94V-0
2.Contact: Phosphor Bronze Flat Pin
3.Plating:Gold Plating over nickel in contact,Tin Planting over nickel in solder area
4.Shield: 0.23 Thickness Brass With Nickel Plated

MECHANICAL

1.Durability: 750 cycles Min.
2.PCB Retention pre-solder: 1 LB Min.

ENVIRONMENTAL

1.Storage:-40 C ~ +80 C

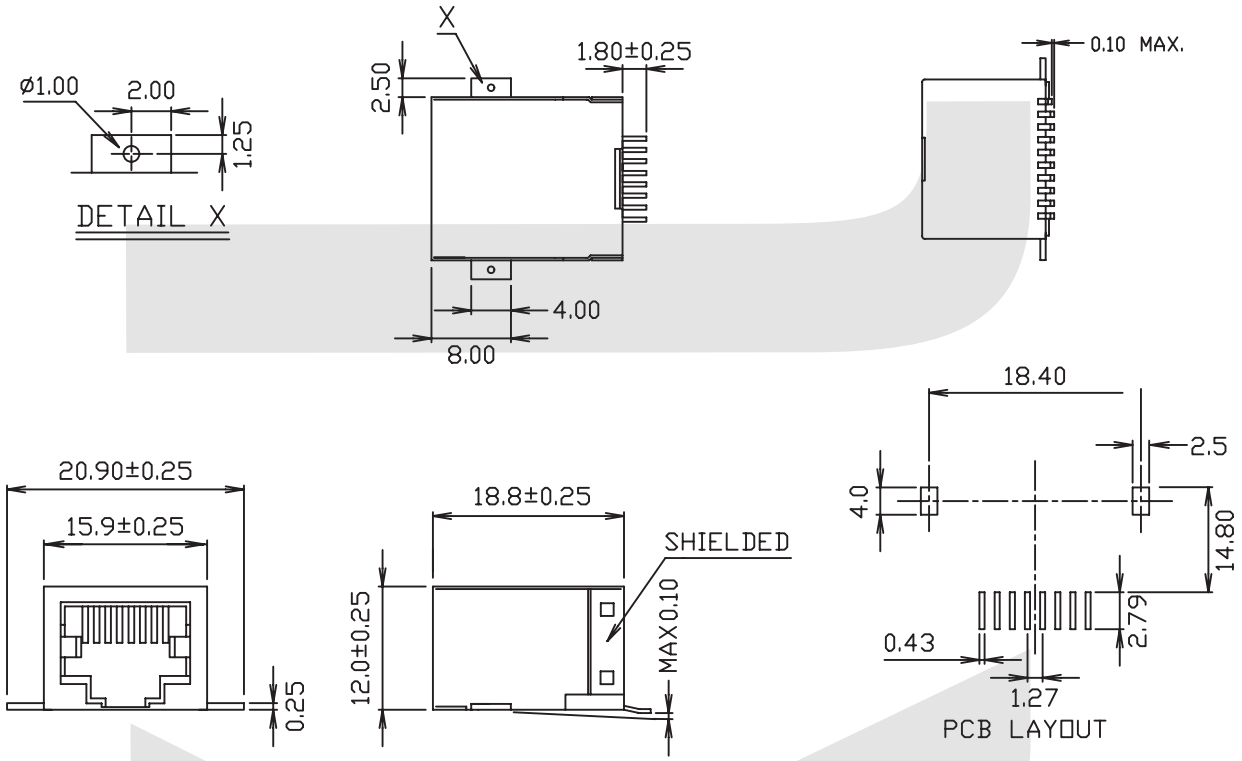

ORDER INFORMATION

KLS12-SMT10 -8P8C - 03

Part Number	Point No.	Gold Thickness
	8P8C Point	01-Fu " 03-6u " 05-30u " 06-50u

SMT Modular Jack Series

KLS12-SMT09-8P SMT Modular Jack Series With shielded

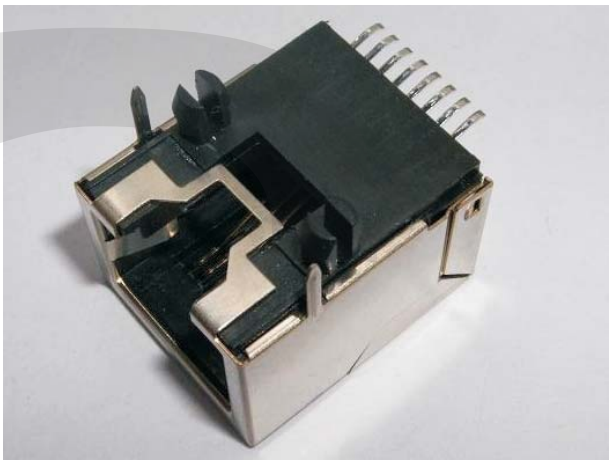

ELECTRICAL

1.Voltage Rating: 125VAC
2.Current Rating: 1.5A
3.Contact Resistance: 30MΩ Max.
4.Insulation Resistance: 500MΩ Min.@500VDC
5.Withstanding Resistance :1000VAC RMS. 50Hz 1minute

MATERIALS

1.Housing: High Temp. Thermoplastic Flammability UL 94V-0
2.Contact: Phosphor Bronze Flat Pin
3.Plating:Gold Plating over nickel in contact,Tin Planting over nickel in solder area
4.Shield: 0.23 Thickness Brass With Nickel Plated

MECHANICAL

1.Durability: 750 cycles Min.
2.PCB Retention pre-solder: 1 LB Min.

ENVIRONMENTAL

1.Storage:-40 C ~ +80 C

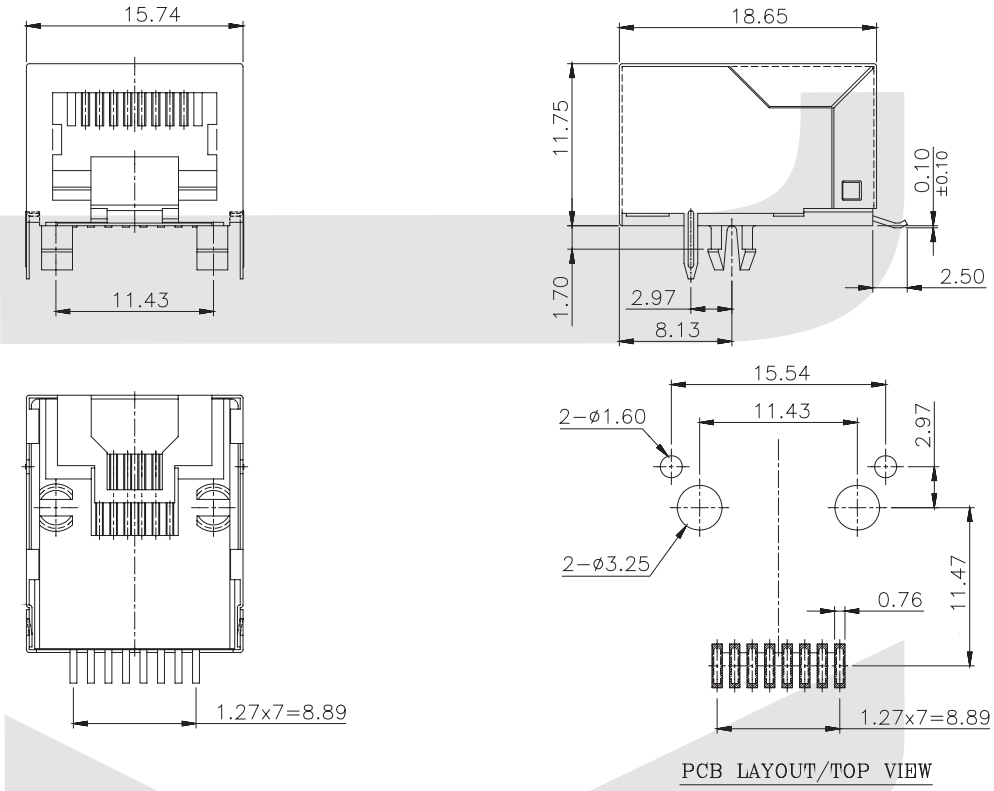

ORDER INFORMATION

KLS12-SMT09 -8P8C - 03

Part Number	Point No.	Gold Thickness
	8P8C Point	01-Fu " 03-6u " 05-30u " 06-50u

SMT Modular Jack Series

KLS12-SMT11-8P SMT Modular Jack Series With shielded

ELECTRICAL

1.Voltage Rating: 125VAC
2.Current Rating: 1.5A
3.Contact Resistance: 30MΩ Max.
4.Insulation Resistance: 500MΩ Min.@500VDC
5.Withstanding Resistance :1000VAC RMS. 50Hz 1minute

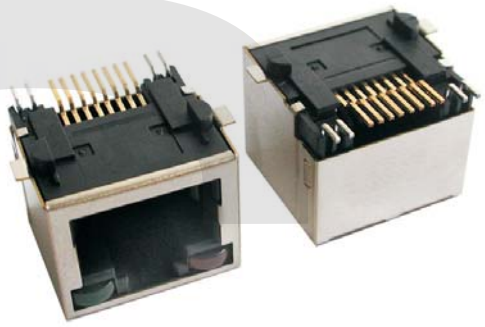

MATERIALS

1.Housing: High Temp. Thermoplastic Flammability UL 94V-0
2.Contact: Phosphor Bronze Flat Pin
3.Plating:Gold Plating over nickel in contact,Tin Planting over nickel in solder area
4.Shield: 0.23 Thickness Brass With Nickel Plated

MECHANICAL

1.Durability: 750 cycles Min.
2.PCB Retention pre-solder: 1 LB Min.

ENVIRONMENTAL

1.Storage:-40 C ~ +80 C

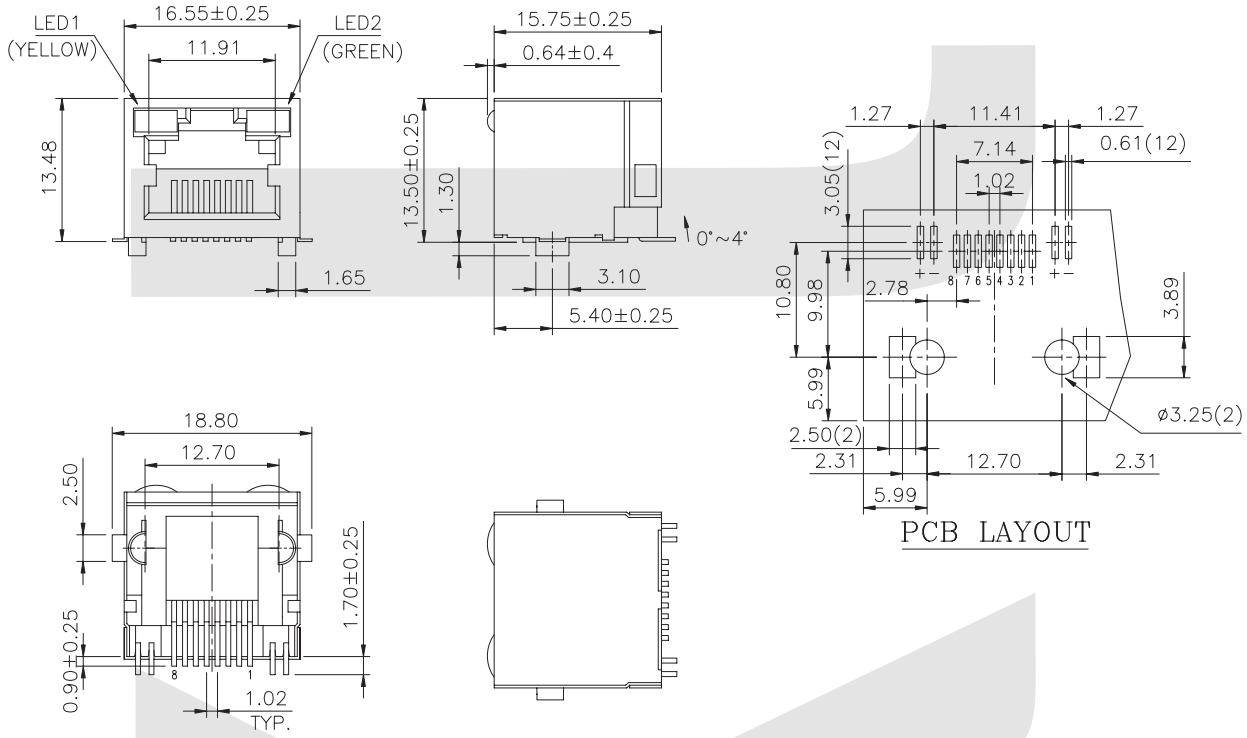

ORDER INFORMATION

KLS12-SMT11 -8P8C - 03

Part Number	Point No.	Gold Thickness
	8P8C Point	01-Fu " 03-6u " 05-30u " 06-50u

SMT Modular Jack Series

KLS12-SMT12-8P SMT Modular Jack Series With shielded

ELECTRICAL

1.Voltage Rating: 125VAC
2.Current Rating: 1.5A
3.Contact Resistance: 30MΩ Max.
4.Insulation Resistance: 500MΩ Min.@500VDC
5.Withstanding Resistance :1000VAC RMS. 50Hz 1minute

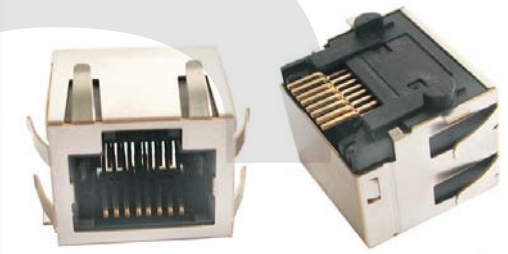

MATERIALS

1.Housing: High Temp. Thermoplastic Flammability UL 94V-0
2.Contact: Phosphor Bronze Flat Pin
3.Plating:Gold Plating over nickel in contact,Tin Planting over nickel in solder area
4.Shield: 0.23 Thickness Brass With Nickel Plated

MECHANICAL

1.Durability: 750 cycles Min.
2.PCB Retention pre-solder: 1 LB Min.

ENVIRONMENTAL

1.Storage:-40 C ~ +80 C

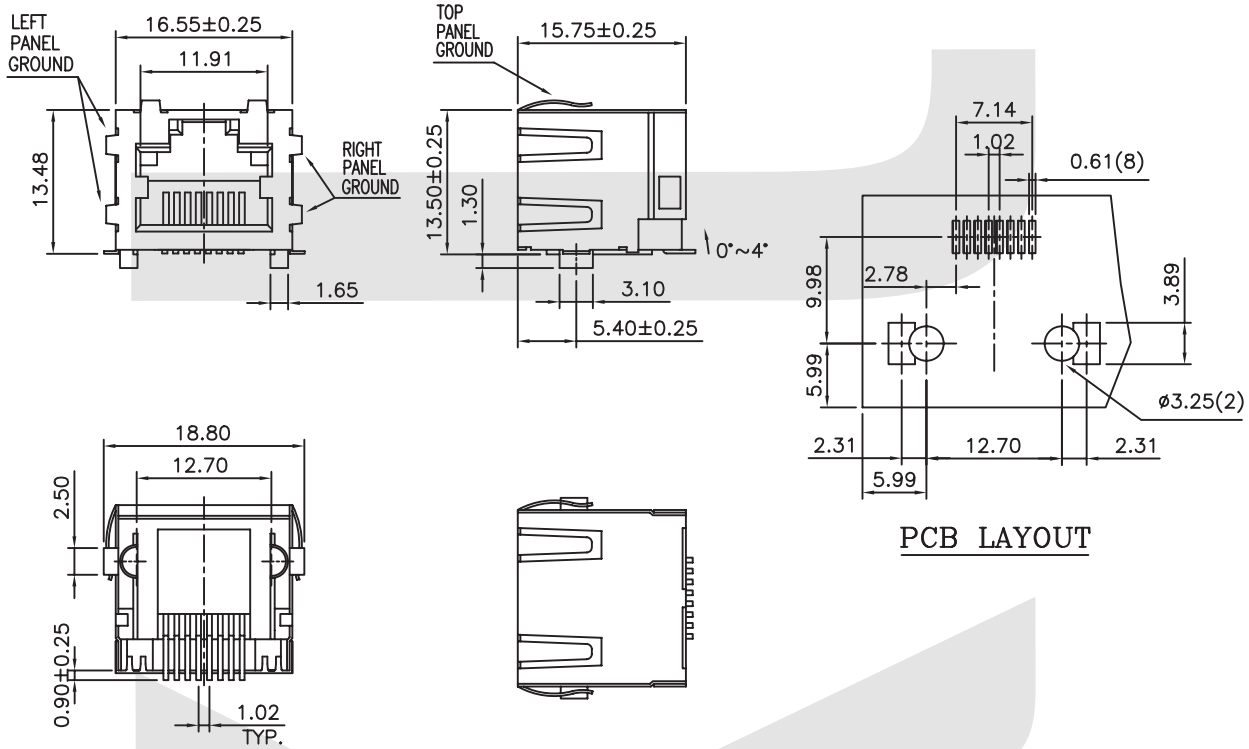

PCB LAYOUT

ORDER INFORMATION

KLS12-SMT12 -8P8C - 03

Part Number	Point No.	Gold Thickness
	8P8C Point	01-Fu " 03-6u " 05-30u " 06-50u

SMT Modular Jack Series

KLS12-SMT13-4P SMT Modular Jack Series

ELECTRICAL

1.Voltage Rating: 125VAC
2.Current Rating: 1.5A
3.Contact Resistance: 30MΩ Max.
4.Insulation Resistance: 500MΩ Min.@500VDC
5.Withstanding Resistance :1000VAC RMS. 50Hz 1minute

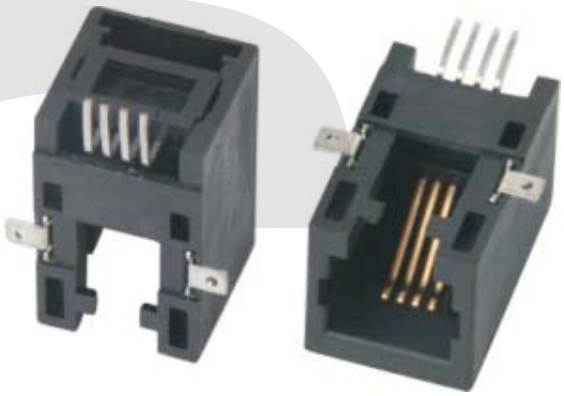

MATERIALS

1.Housing: High Temp. Thermoplastic Flammability UL 94V-0
2.Contact: Phosphor Bronze Flat Pin
3.Plating:Gold Plating over nickel in contact,Tin Planting over nickel in solder area

MECHANICAL

1.Durability: 750 cycles Min.
2.PCB Retention pre-solder: 1 LB Min.

ENVIRONMENTAL

1.Storage:-40 C ~ +80 C

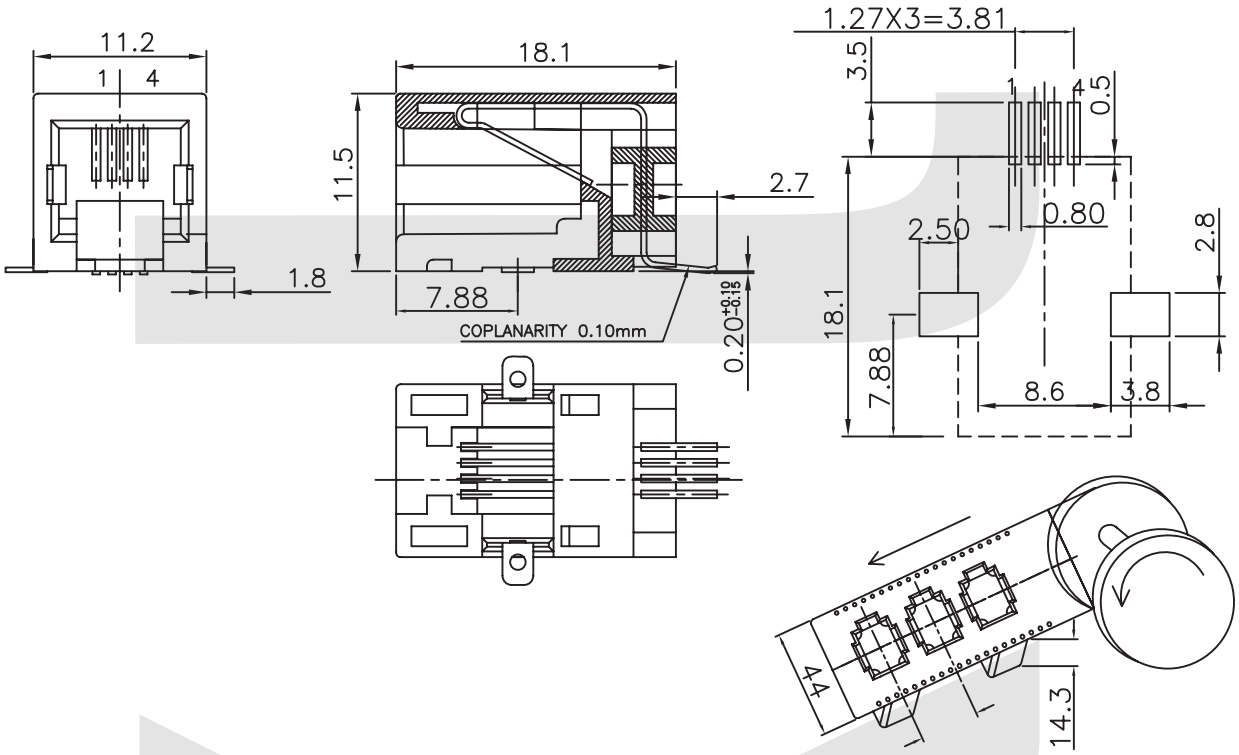

ORDER INFORMATION

KLS12-SMT13 -4P4C - 03

Part Number	Point No.	Gold Thickness
	4P4C Point	01-Fu " 03-6u " 05-30u " 06-50u

SMT Modular Jack Series

XII

KLS12-SMT14-8P SMT Modular Jack Series

ELECTRICAL

1.Voltage Rating: 125VAC
2.Current Rating: 1.5A
3.Contact Resistance: 30MΩ Max.
4.Insulation Resistance: 500MΩ Min.@500VDC
5.Withstanding Resistance :1000VAC RMS. 50Hz 1minute

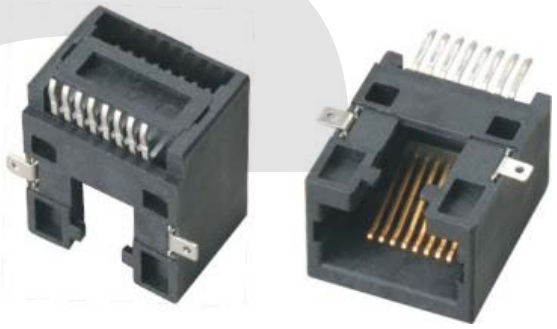

MATERIALS

1.Housing: High Temp. Thermoplastic Flammability UL 94V-0
2.Contact: Phosphor Bronze Flat Pin
3.Plating:Gold Plating over nickel in contact,Tin Planting over nickel in solder area

MECHANICAL

1.Durability: 750 cycles Min.
2.PCB Retention pre-solder: 1 LB Min.

ENVIRONMENTAL

1.Storage:-40 C ~ +80 C

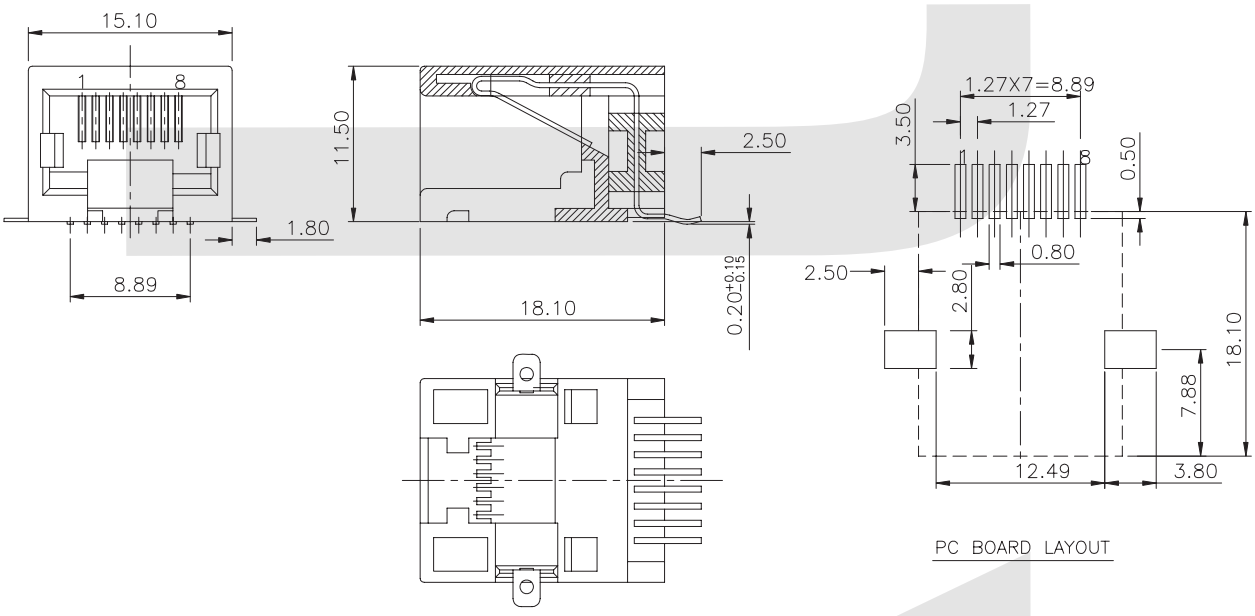

ORDER INFORMATION

KLS12-SMT14 -8P8C - 02

Part Number	Point No.	Gold Plating
	8P8C Point	01-Fu " 02-3u " 03-6u " 05-30u " 06-50u

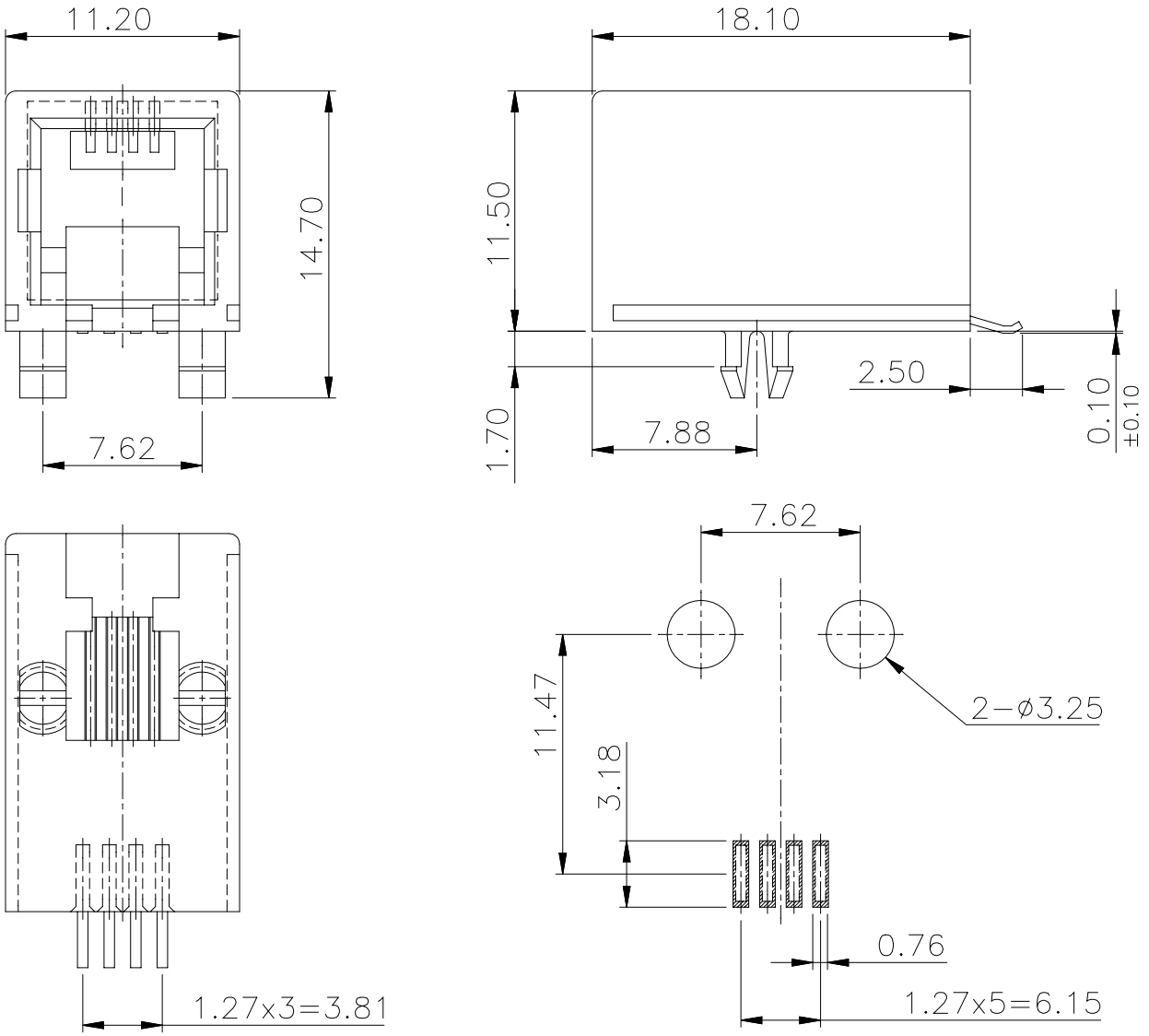

PCB LAYOUT/TOP VIEW

Notes：

MATERIALS

HOUSING: HIGH TEMP. THERMOPLASTIC FLAMMABILITY RATING UL 94V-0

CONTACTS: PHOSPHOR BRONZE

PLATING: GOLD PLATING OVER NICKEL IN CONTACT, TIN PLANTING OVER NICKEL IN SOLDER AREA

TOLERANCE UNLESS OTHERWISE SPECIFIED		CUSTOMER COPY	KLS ELECTRONIC CO .,LTD				
LINER	ANGLES		PROD. DESCRIP.	4P4C SMT JACK			
0 ± 0.50	± 3°	PROJECTION	PROD. NUMBER	KLS12			
.0 ± 0.38							
.00 ± 0.25							
DESIGN							
CHECK			SIZE	UNIT	SCALE	SHEET	REV.
APPRO.			A4	MM	3/1	1 OF 1	A

ROHS

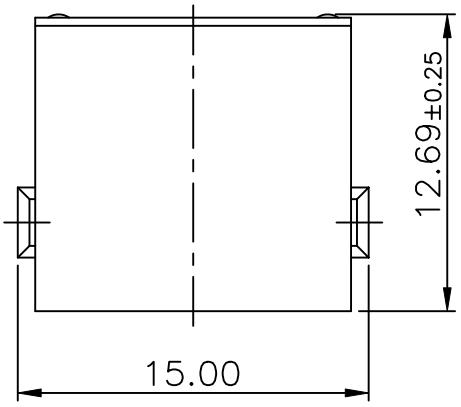

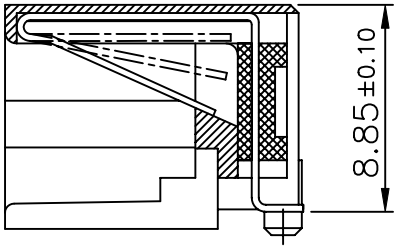

SECTION A–A

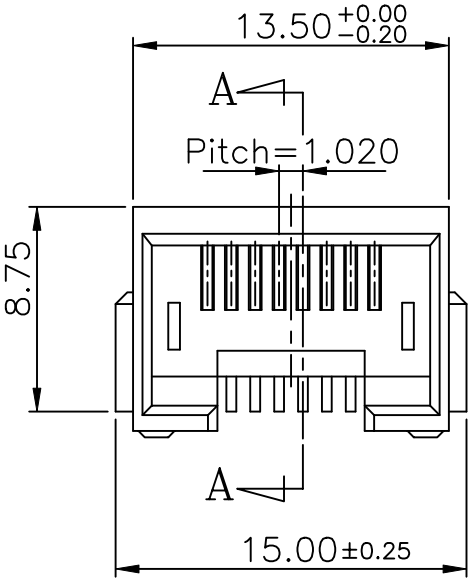

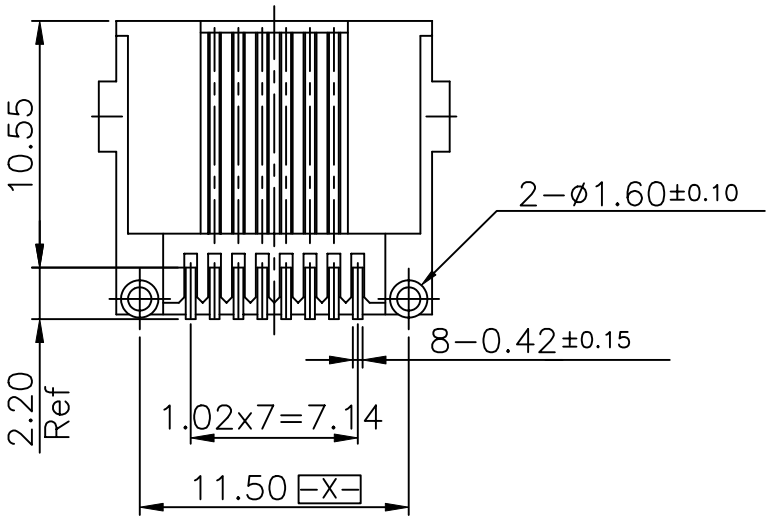

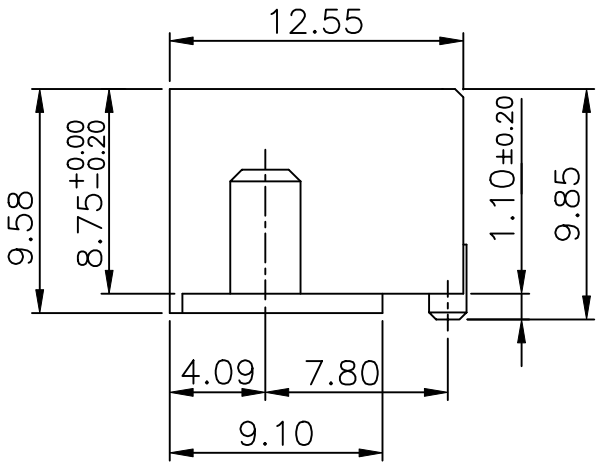

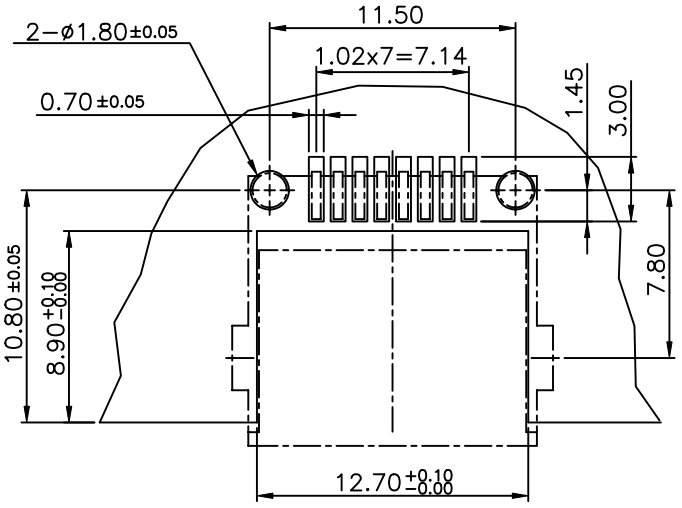

PCB LAYOUT

Notes：

MATERIALS

HOUSING: NY-46 POLYESTER UL-94V-0
STANDARD COLOUR BLACK

CONTACTS: 0.30 THICKNESS ALLOY C5191 JIS H 3110,
GOLD PLATING OVER NICKEL

GOLD PLATING: SELECTIVE GOLD PLATING

TOLERANCE UNLESS OTHERWISE SPECIFIED		CUSTOMER COPY	KLS ELECTRONIC CO .,LTD					
LINER	ANGLES		PROD. DESCRIP.	RJ45 8P8C SMT JACK (SMT TYPE)				
0 ± 0.50	± 3°	PROJECTION	PROD. NUMBER	KLS12				
.0 ± 0.38								
.00 ± 0.25								
DESIGN								
CHECK			SIZE	UNIT	SCALE	SHEET	REV.	
APPRO.			A4	MM	3/1	1 OF 1	A	

ROHS

Clamp modules Series

KLS12-CM110-01

ELECTRICAL:
1. VOLTAGE RATING: 250 VDC
2. CURRENT RATING : 1.5 AMP
3. CONTACT RESISTANCE : 10 MILLIOHMS MAX.
4. INSULATION RESISTANCE : 1000 MEGOHMS MIN. @500 VDC
5. DIELECTRIC STRENGTH : 1000 VAC 60Hz, 1MIN.

MECHANICAL:
1. HOUSING MATERIAL : PC UL94V-0
2. CONTACT : PHOSPHOR BRONZE WITH NICKEL OR SILVER PLATING
3. CABLE SIZE : SOLID COPPER WIRES UP TO 0.4mm-0.8mm IN DIA.



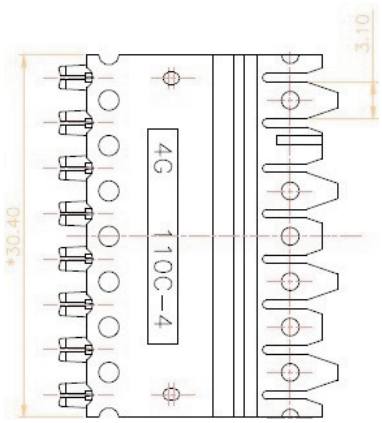

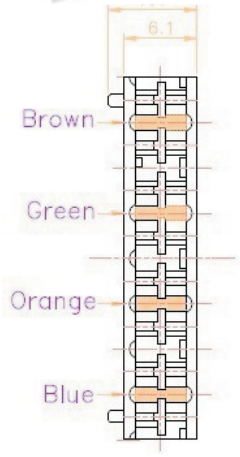

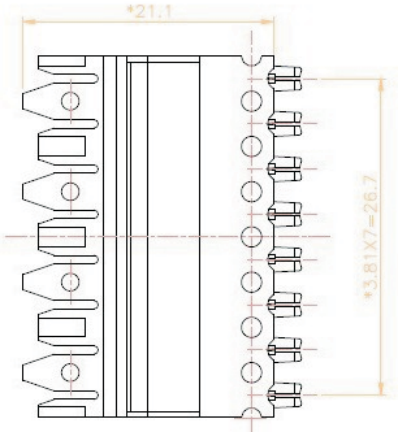

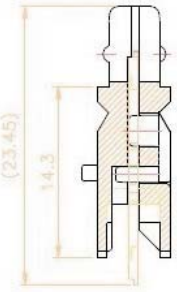

ORDER INFORMATION

KLS12-CM110-01-4P

SERIES NO.

POLE NO.
4P
5P

Clamp modules Series

KLS12-CM110-02

ELECTRICAL:
1. VOLTAGE RATING: 250 VDC
2. CURRENT RATING : 1.5 AMP
3. CONTACT RESISTANCE : 10 MILLIOHMS MAX.
4. INSULATION RESISTANCE : 1000 MEGOHMS MIN. @500 VDC
5. DIELECTRIC STRENGTH : 1000 VAC 60Hz, 1MIN.

MECHANICAL:
1. HOUSING MATERIAL : PC UL94V-0
2. CONTACT : PHOSPHOR BRONZE WITH NICKEL OR SILVER PLATING
3. WIRE : 24~26# AWG

ENVIRONMENTAL
1. STORAGE TEMPERATURE: -20℃ TO +80℃ AND HUMILITY UP TO 95%
2. OPERATION TEMPERATURE: 0℃ TO 70℃



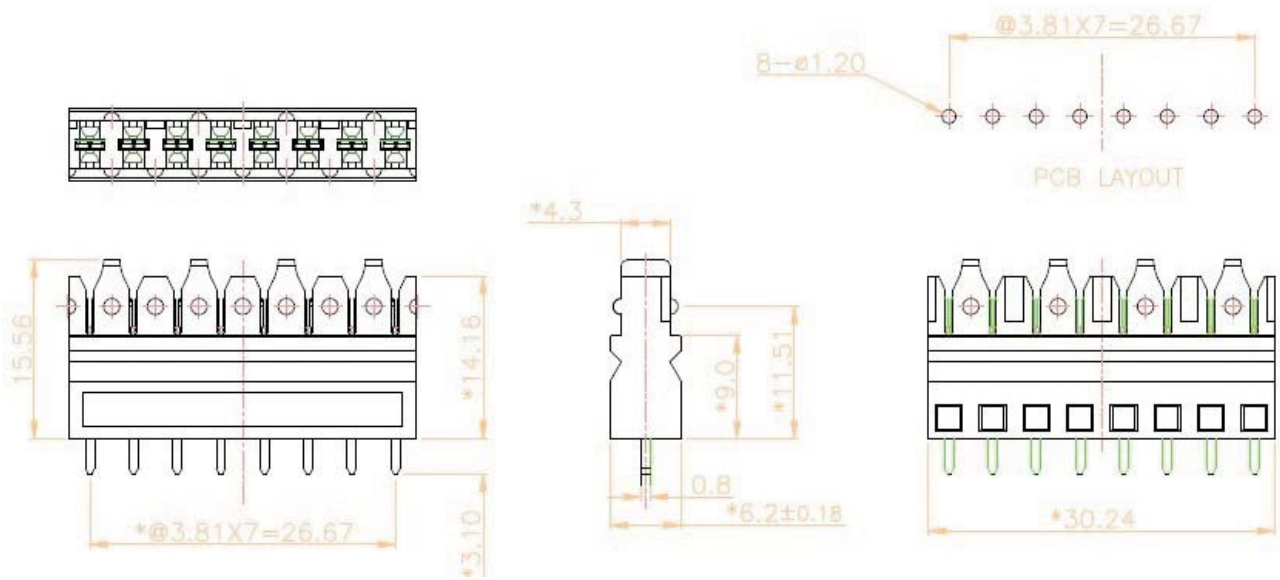

ORDER INFORMATION

KLS12-CM110-02-4P

SERIES NO.

POLE NO.
4P
8P

Clamp modules Series

KLS12-CM110-03

ELECTRICAL:
1. VOLTAGE RATING: 250 VDC
2. CURRENT RATING : 1.5 AMP
3. CONTACT RESISTANCE : 10 MILLIOHMS MAX.
4. INSULATION RESISTANCE : 1000 MEGOHMS MIN. @500 VDC
5. DIELECTRIC STRENGTH : 1000 VAC 60Hz, 1MIN.

MECHANICAL:
1. HOUSING MATERIAL : PC UL94V-0
2. CONTACT : PHOSPHOR BRONZE WITH NICKEL OR SILVER PLATING
3. WIRE : 24~26# AWG

ENVIRONMENTAL
1. STORAGE TEMPERATURE: -20℃ TO +80℃ AND HUMILITY UP TO 95%
2. OPERATION TEMPERATURE: 0℃ TO 70℃



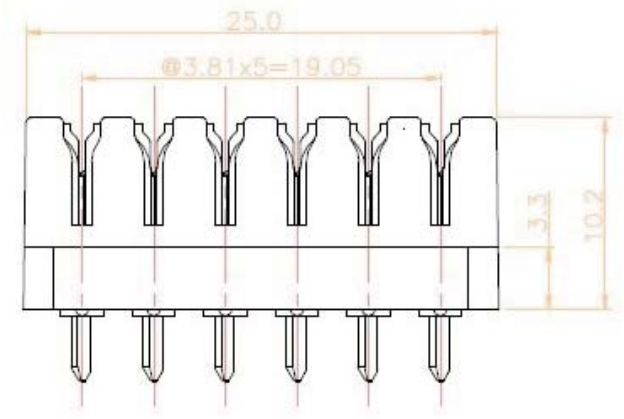

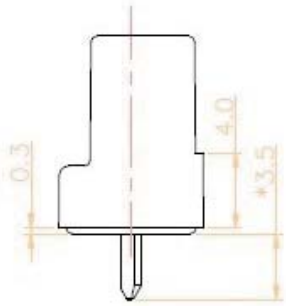

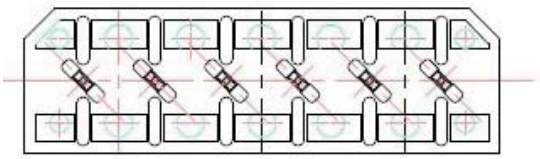

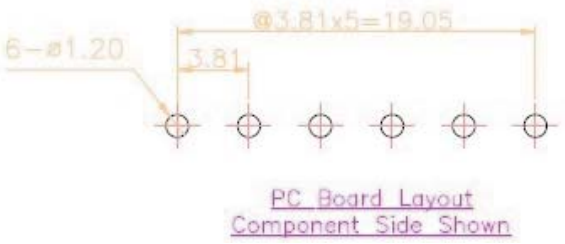

ORDER INFORMATION

KLS12-CM110-03-4P

SERIES NO.

POLE NO.
4P
6P
8P

Clamp modules Series

KLS12-CM-04 (IDC PCB Module)

FUNCTION:
1.Working in with the important parts of network system.
2.Various accessories improve performance of equipment.
DESCRIPTION:
A: 2Pair; B: 4Pair; C: 6Pair; D:8Pair



ORDER INFORMATION

KLS12-CM-04 - 4P

SERIES NO.

POLE NO
2P
4P
6P
8P

Clamp modules Series

KLS12-CM-1001 10Pair LSA disconnection module

PLASTIC PARTS: PBT V0 UI94 OR ABS OR PC
CONTACT PIN: PHOSPHOR BRONZE WITH SOLVER-PLATED.
DIMENSION: 124mmX21mmX40mm
INTERNAL DIAMETER OF WIRE: 0.4mm-0.65mm

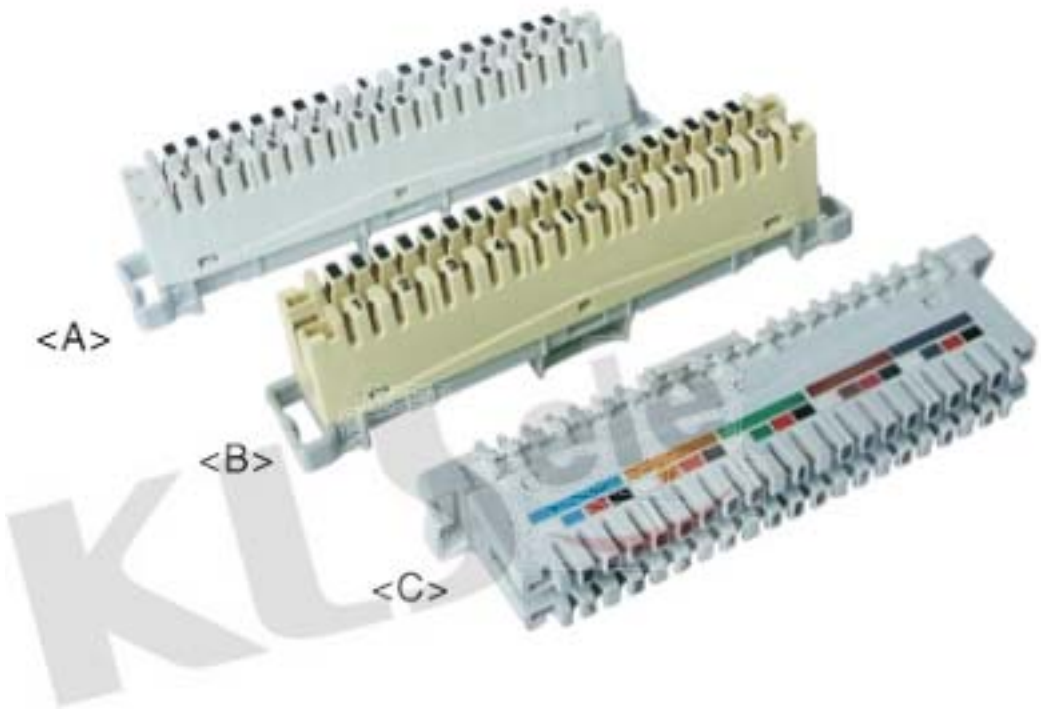

ORDER INFORMATION

KLS12-CM-1001- A

SERIES NO.

A	GRAY BASE, WHITE BODY
B	GRAY BASE, YELLOW BODY
C	GRAY BASE, GRAY BODY COLORED LABEL

Clamp modules Series

KLS12-CM-1002 10Pair LSA connection module

PLASTIC PARTS: PBT V0 UI94 OR ABS OR PC
CONTACT PIN: PHOSPHOR BRONZE WITH SOLVER-PLATED.
DIMENSION: 124mmX21mmX40mm
INTERNAL DIAMETER OF WIRE: 0.4mm-0.65mm

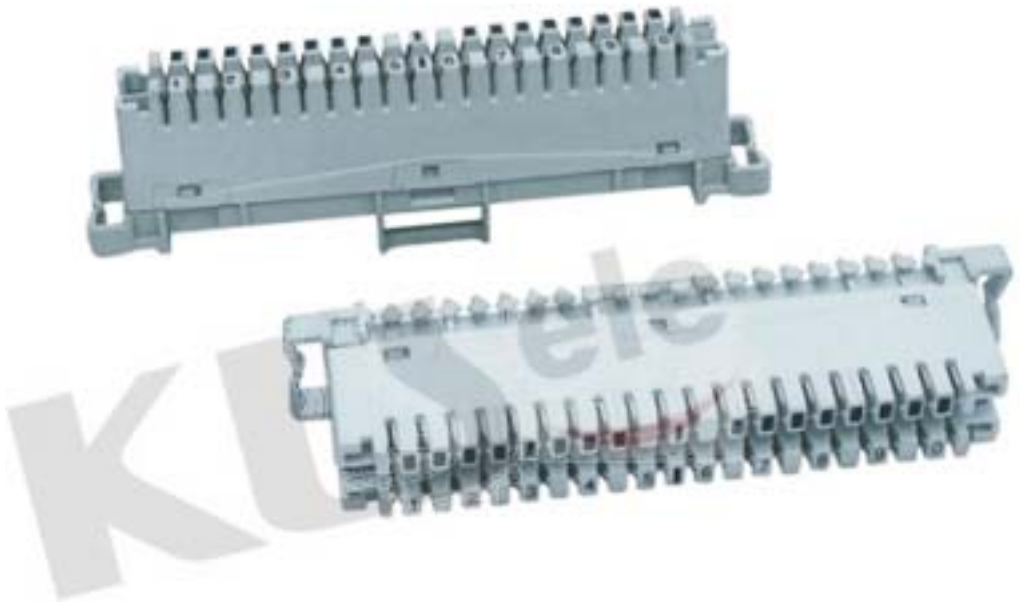

ORDER INFORMATION

KLS12-CM-1002

SERIES NO.

Color:	GRAY BASE, GRAY BODY

Clamp modules Series

KLS12-CM-1003 8Pair LSA plus module

PLASTIC PARTS: PBT V0 UI94 OR ABS OR PC
CONTACT PIN: PHOSPHOR BRONZE WITH SOLVER-PLATED.
DIMENSION: 104mmX21mmX40mm
INTERNAL DIAMETER OF WIRE: 0.4mm-0.65mm



ORDER INFORMATION

KLS12-CM-1003- A

SERIES NO.

A	8 pair LSA disconnection module
B	8 pair LSA connection module

Clamp modules Series

KLS12-CM-1004 16Pair LSA disconnection module

PLASTIC PARTS: PBT V0 UI94 OR ABS OR PC
CONTACT PIN: PHOSPHOR BRONZE WITH SOLVER-PLATED.
DIMENSION: 131mmX21mmX40mm
INTERNAL DIAMETER OF WIRE: 0.4mm-0.65mm

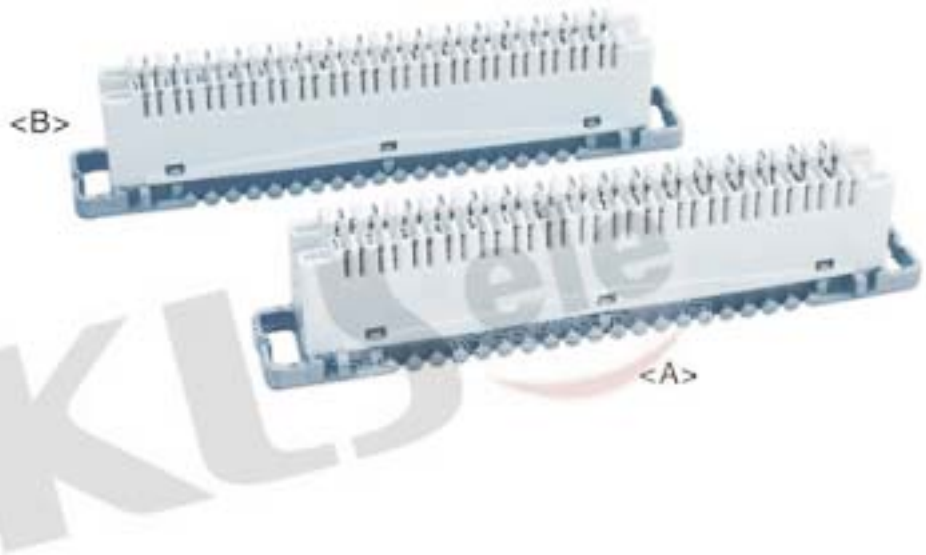

ORDER INFORMATION

KLS12-CM-1004- A

SERIES NO.

A	16 pair LSA disconnection module
B	16 pair LSA connection module

Clamp modules Series

KLS12-CM-1005 10Pair LSA profile module

PLASTIC PARTS: PBT V0 UI94 OR ABS OR PC
CONTACT PIN: PHOSPHOR BRONZE WITH SOLVER-PLATED.
DIMENSION: 124mmX21mmX40mm
INTERNAL DIAMETER OF WIRE: 0.4mm-0.65mm



ORDER INFORMATION

KLS12-CM-1005- A

SERIES NO.

A	10 pair profile disconnection module
B	10 pair profile connection module

Clamp modules Series

KLS12-CM-1006 5Pair LSA plus module

PLASTIC PARTS: PBT V0 UI94 OR ABS OR PC
CONTACT PIN: PHOSPHOR BRONZE WITH SOLVER-PLATED.
DIMENSION: 74mmX20mmX32mm
INTERNAL DIAMETER OF WIRE: 0.4mm-0.65mm



ORDER INFORMATION

KLS12-CM-1006- A

SERIES NO.

A	5 pair LSA disconnection module
B	5 pair LSA connection module

Clamp modules Series

KLS12-CM-1007 10Pair LSA erthing module

PLASTIC PARTS: PBT V0 UI94 OR ABS OR PC
CONTACT PIN: PHOSPHOR BRONZE WITH SOLVER-PLATED.
DIMENSION: 121mmX21mmX40mm
INTERNAL DIAMETER OF WIRE: 0.4mm-0.65mm



ORDER INFORMATION

KLS12-CM-1007- A

SERIES NO.

A	10 pair LAS earthing module
B	10 pair LSA profile earthing module

Clamp modules Series

KLS12-CM-1008 10Pair lead module

PLASTIC PARTS: PBT V0 UI94 OR ABS OR PC
CONTACT PIN: PHOSPHOR BRONZE WITH SOLVER-PLATED.
DIMENSION: 121mmX21mmX40mm
INTERNAL DIAMETER OF WIRE: 0.4mm-0.65mm



ORDER INFORMATION

KLS12-CM-1008

SERIES NO.

Color:	GRAY BASE, GRAY BODY

Clamp modules Series

KLS12-CM-1009 Poyet type disconnection module

PLASTIC PARTS: PC
CONTACT PIN: PHOSPHOR BRONZE WITH SOLVER-PLATED.

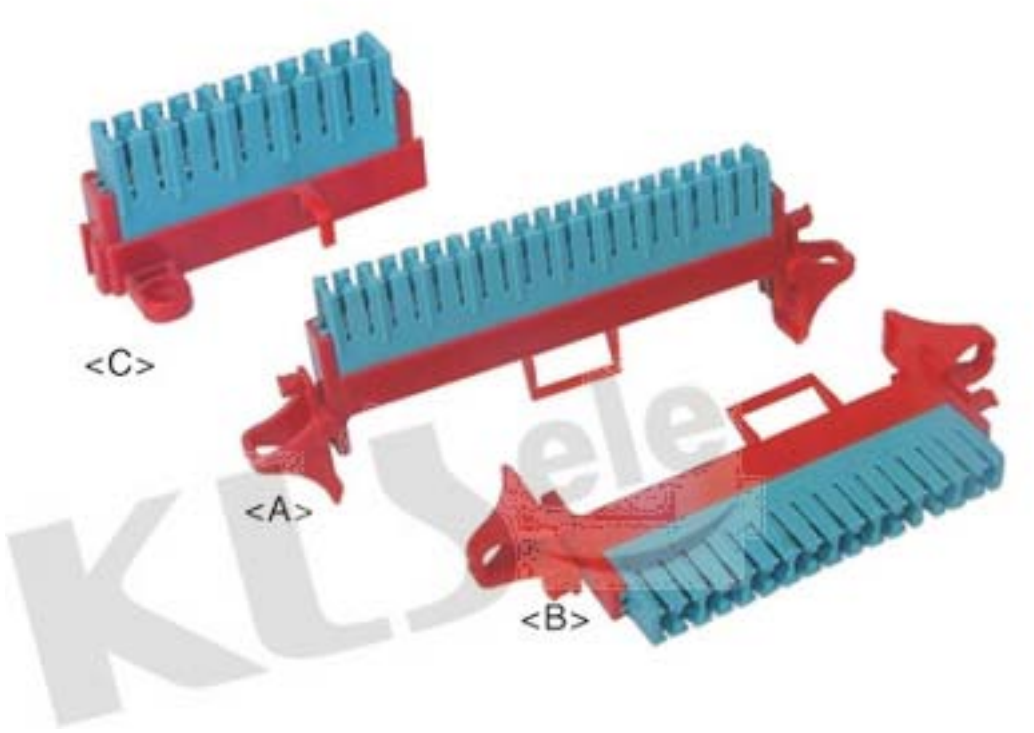

ORDER INFORMATION

KLS12-CM-1009-A

SERIES NO.

A	10 pair Pouyet type disconnection module
B	8 pair Pouyet type disconnection module
B	5 pair Pouyet type disconnection module

Color:	RED BASE, BLUE BODY
	GREY BASE, WHITE BODY

Clamp modules Series

KLS12-CM-1010 10Pair switching module

PLASTIC PARTS: PC
CONTACT PIN: PHOSPHOR BRONZE WITH SOLVER-PLATED
DIMENSION: 124mmX21mmX40mm
INTERNAL DIAMETER OF WIRE: 0.4mm-0.65mm.

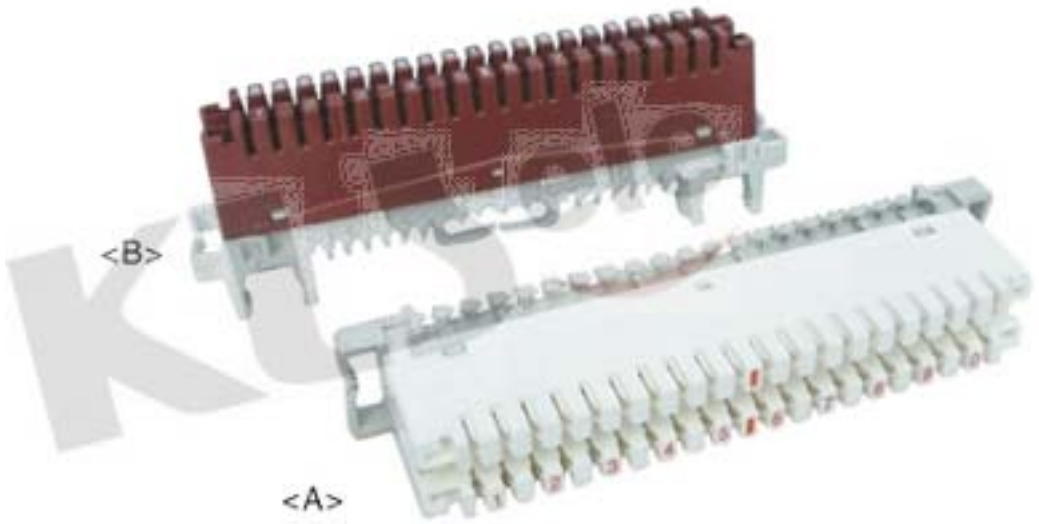

ORDER INFORMATION

KLS12-CM-1010-A

SERIES NO.

A	10 pair LSA switching module
B	10 pair profile switching module

Clamp modules Series

KLS12-CM-1012 25Pair feed through (FT) module

PLASTIC PARTS: PBT V0 UL94 or ABS or PC
CONTACT PIN: PHOSPHOR BRONZE WITH SOLVER-PLATED
DIMENSION: 222mmX19mmX48mm
INTERNAL DIAMETER OF WIRE: 0.4mm-0.65mm.



ORDER INFORMATION

KLS12-CM-1012

SERIES NO.

Color:	brown, colored label attached on the body

Clamp modules Series

KLS12-CM-1301

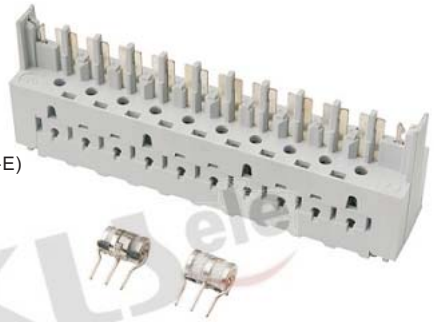

ELECTRICAL:

1. SURGE BREAKDOWN VOLTAGE: < 800 V(@RISING VOLTAGE 1000V/US)
2. AC DISCHARGE CURRENT:10A(5 TIMES, 1S PER TIME WITH 3MINS INTERVAL)
   SURGE DISCHARGE CURRENT: 100A(10/1000US,300TIMES WITH 3MINS INTERVAL)
   SURGE DISCHARGE CURRENT: 10KA(8/20US,10TIMES WITH 3MINS INTERVAL)(A-E,B-E)
3. INSULATION RESISTANCE: > =10000 MEGOHMS.
4. ELECTRODE CAPACITANCE: < 3PF(@1MHZ)

MECHANICAL:

1. HOUSING MATERIAL : PBT UL94V-0
2. BASE MATERIAL : PBT UL94V-0
3. CONTACT MATERIAL : PHOSPHOR BRONZE 0.45mm THICKNESS
4. PLATING : SILVER PLATING 20u" OVER NICKEL PLATING 30u"~80u" FOR ALL

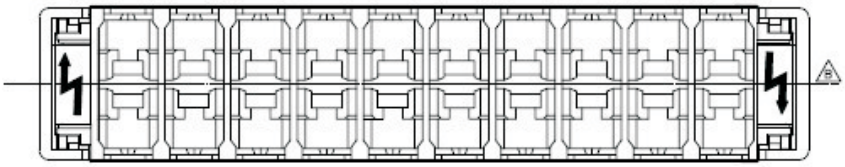

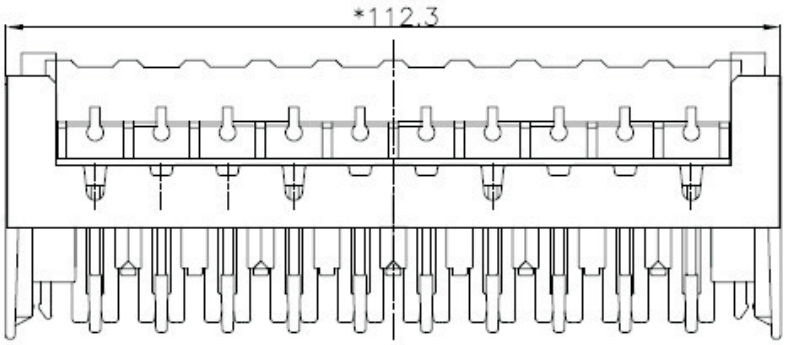

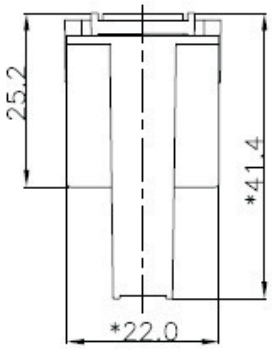

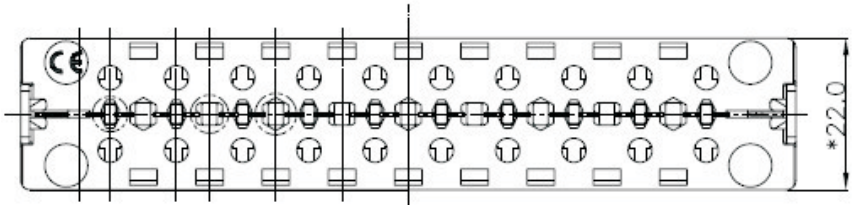

ORDER INFORMATION

KLS12-CM-1301-10-2

- SERIES NO.
- PAIR NO.: 2, 3
- POLE NO.: 2, 3

Clamp modules Series

KLS12-CM-1302 (24&48 Ports PATCH PANEL CAT6 UTP)

ELECTRICAL:
1. VOLTAGE RATING: 250 VDC
2. CURRENT RATING : 1.5 AMP
3. CONTACT RESISTANCE : 100 MILLIOHMS MAX.
4. INSULATION RESISTANCE : 1000 MEGOHMS MIN. @500 VDC
5. DIELECTRIC STRENGTH :750 VAC 60Hz, 1MIN.

MECHANICAL:
1. HOUSING MATERIAL : PBT+30%GF, UL94V-0
2.PANEL FRAME : CARBON STEEL, POWER COATING IN BLACK COLOR
3.IDC MATERIAL : PC UL94V-0
4. CONTACT : PHOSPHOR BRONZE WITH NICKEL PLATING

ENVIRONMENTAL
1. STORAGE TEMPERATURE: -40℃ TO +85℃
2. OPERATION TEMPERATURE: 0℃ TO 70℃

CONFORMING TO TIA/EIA 568B.2
MATES WITH MODULAR PLUG CONFORMING TO FCC PART 68. SUBPART F.



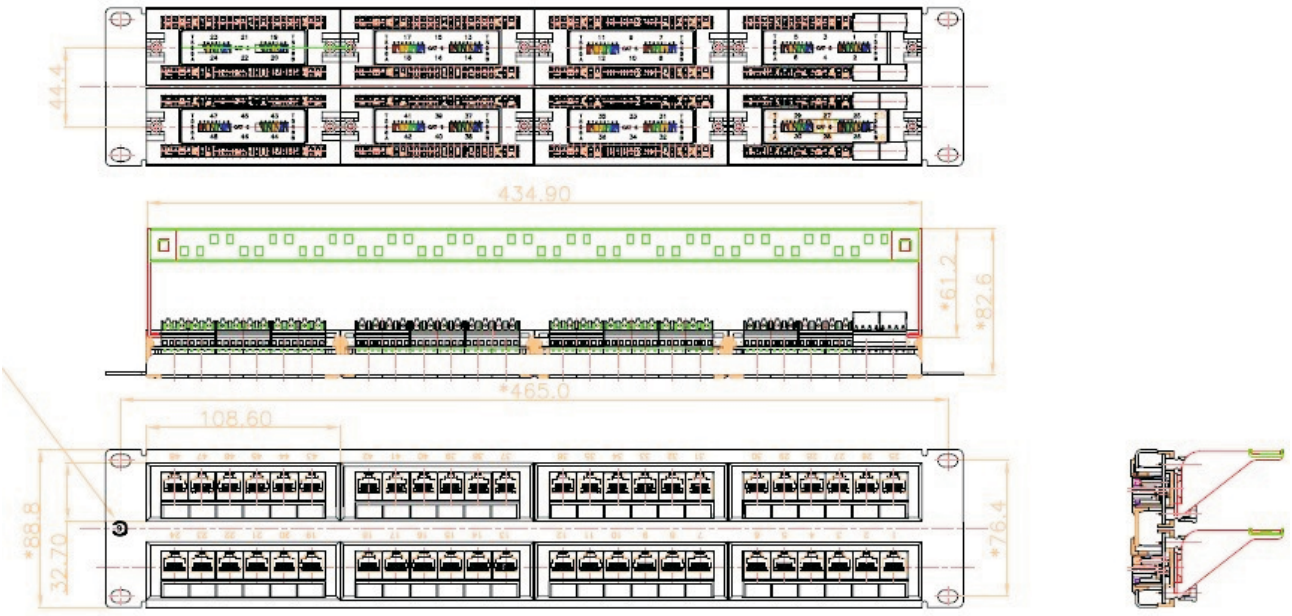

ORDER INFORMATION

KLS12-CM-1302-24

SERIES NO.

24	24 Ports PATCH PANEL CAT6 UTP
48	48 Ports PATCH PANEL CAT6 UTP

Clamp modules Series

KLS12-CM-1028 CAT5E 10Pair high band disconnection module

CAT5E module
PLASTIC PARTS: PBT V0 UL94 or ABS or PC
CONTACT PIN: PHOSPHOR BRONZE WITH SOLVER-PLATED
DIMENSION: 122mmX18mmX43mm
INTERNAL DIAMETER OF WIRE: 0.4mm-0.65mm.



ORDER INFORMATION

KLS12-CM-1028

SERIES NO.

Clamp modules Series

KLS12-CM-1029 CAT5E 8Pair high band disconnection module

CAT5E module
PLASTIC PARTS: PBT V0 UL94 or ABS or PC
CONTACT PIN: PHOSPHOR BRONZE WITH SOLVER-PLATED
DIMENSION: 122mmX18mmX43mm
INTERNAL DIAMETER OF WIRE: 0.4mm-0.65mm.



ORDER INFORMATION

KLS12-CM-1029

SERIES NO.

Clamp modules Series

KLS12-CM-1030 5Pair double disconnection module

PLASTIC PARTS: PBT V0 UL94 or ABS or PC
CONTACT PIN: PHOSPHOR BRONZE WITH SOLVER-PLATED
DIMENSION: 74mmX20mmX34mm
INTERNAL DIAMETER OF WIRE: 0.4mm-0.65mm.



ORDER INFORMATION

KLS12-CM-1030

SERIES NO.

Color:	grey body and base

Clamp modules Series

KLS12-CM-1031 Quick connect Subscriber Terminal Block (without protection)

> STB module, without protection.
> Plastic parts: Polycarbonate.
> Contact pin: Phosphor bronze with silver-plated.
> Internal diameter of wire: 0.4mm-1.2mm.
> Dimension: 50mm20mm40mm.



ORDER INFORMATION

KLS12-CM-1031

SERIES NO.

Clamp modules Series

KLS12-CM-1032 Quick connect Subscriber Terminal Block (without protection)

> STB module, without protection.
> Plastic parts: Polycarbonate.
> Contact pin: Phosphor bronze with silver-plated.
> Internal diameter of wire: 0.4mm-1.2mm.
> Dimension: 50mm20mm40mm.

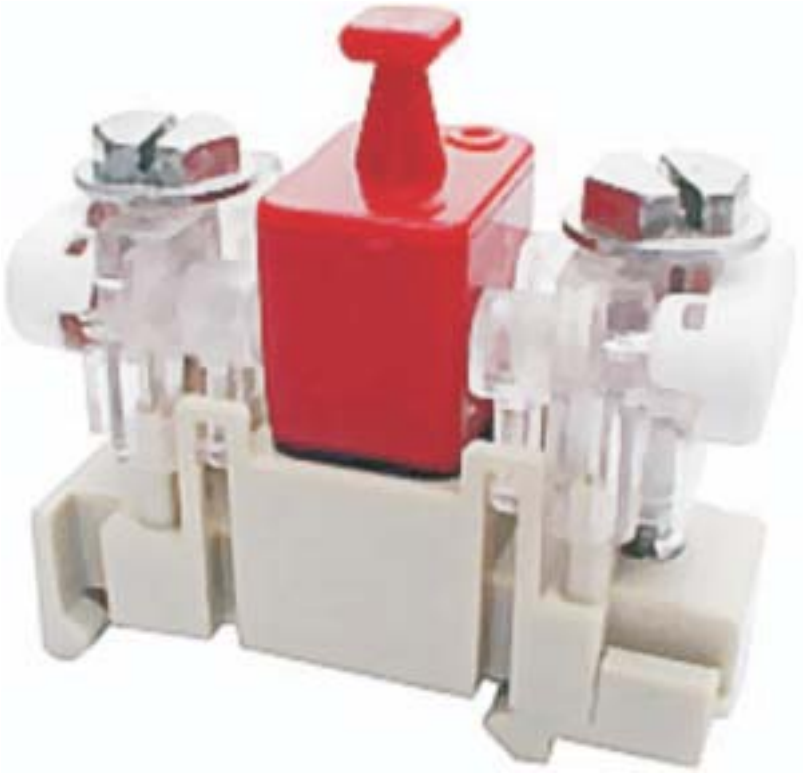

ORDER INFORMATION

KLS12-CM-1032

SERIES NO.

Clamp modules Series

KLS12-CM-1033 (25 Pair spin clutch module)



ORDER INFORMATION

KLS12-CM-1033

SERIES NO.

Clamp modules Series

KLS12-CM-1034 (10 Pair spin clutch module)

Cross connection type.
With leg.



ORDER INFORMATION

KLS12-CM-1034

SERIES NO.

Clamp modules Series

KLS12-CM-1035 (100 Pair spin clutch module)

With 4 pcs 25 pair spin clutch modules.
Fixation through metal frame.



ORDER INFORMATION

KLS12-CM-1035

SERIES NO.

Clamp modules Series

KLS12-CM-1036 10Pair disconnection module with PCB

PLASTIC PARTS: PBT V0 UL94 or ABS or PC
CONTACT PIN: PHOSPHOR BRONZE WITH SOLVER-PLATED
DIMENSION: 128mmX37mmX36mm
INTERNAL DIAMETER OF WIRE: 0.4mm-0.65mm.



ORDER INFORMATION

KLS12-CM-1036

SERIES NO.

Color:	grey base, white body, with screw block

USB Connector series

KLS1-233 (Micro USB B Type)

Electrical Characteristics
Rated Current :0.5A
Rated Voltage: 30V AC (rms)
Dielectric withstanding voltage: 100V DC for 1 min.
Insulation Resistance : 100 MΩ Min.
Contact resistance: 50 mΩ max.
Temperature rating:-30°C ~ +80°C

Materials
Housing:LCP UL 94V-0, black color
Contacts: Copper alloy
Pin Plated: Gold plated or matte tin plated



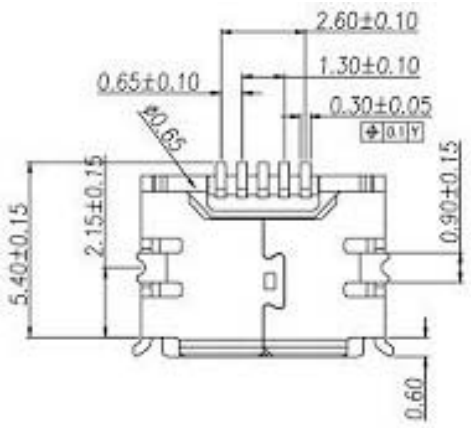

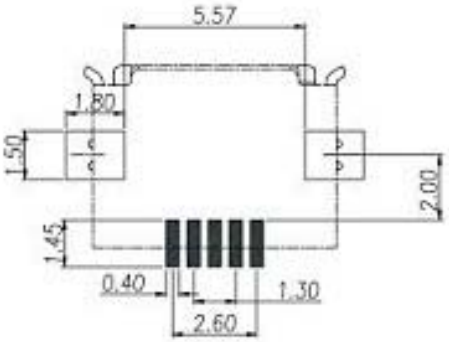

P.C.B LAYOUT

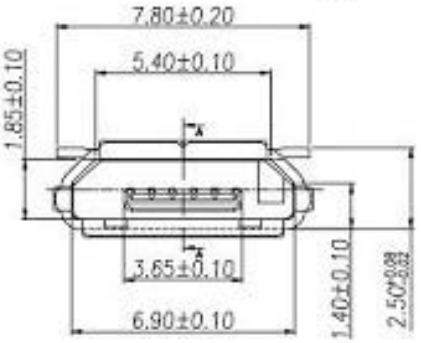

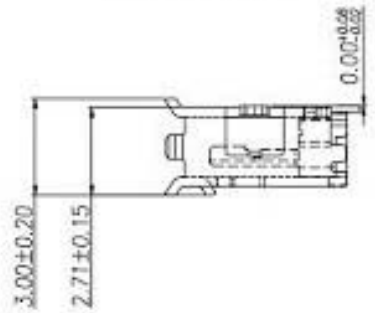

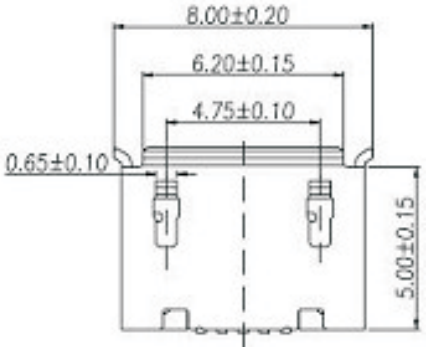

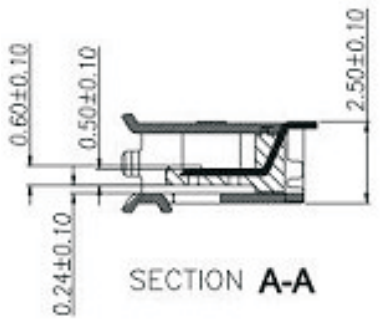

SECTION **A-A**

USB Connector series

KLS1-233-1 with Post



ORDER INFORMATION

KLS1-233-0 0 0 - R

SERIES NO.

0	Without Post
1	With Post

T	Tube packing
P	Blister tray packing
R	Reel packing

0	Without Mylar
1	With Mylar

0	Gold plated
1	Matte Tin plated

USB Connector series

KLS1-235 (Micro USB 5P PLUG)



Electrical Characteristics
Rated Current :0.5A
Rated Voltage: 30V AC (rms)
Dielectric withstanding voltage: 100V DC for 1 min.
Insulation Resistance : 100 MΩ Min.
Contact resistance: 50 mΩ max.
Temperature rating:-30 C ~ +80 C

Materials
Housing: LCP UL 94V-0, black color
Contacts: Copper alloy
Pin Plated: Gold plated or matte tin plated

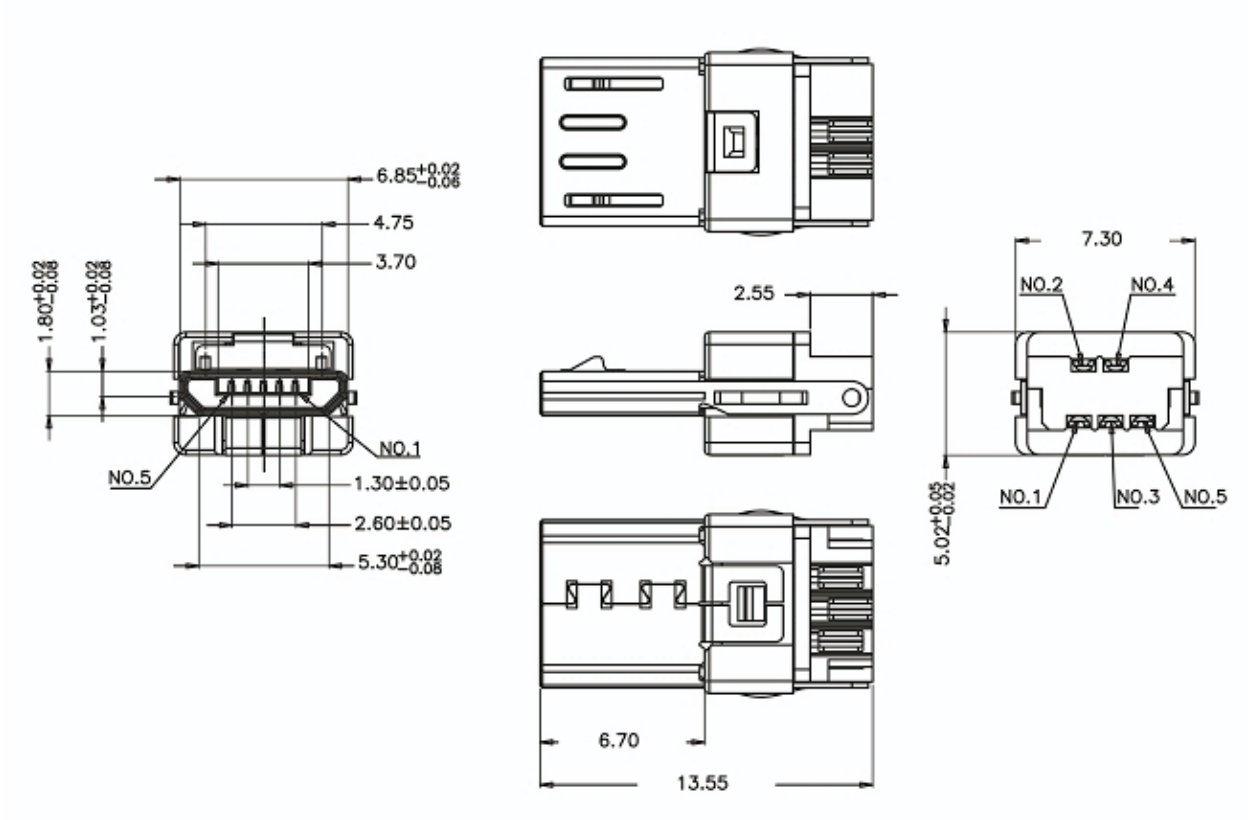

ORDER INFORMATION

KLS1-235-0

SERIES NO.

0	Gold plated
1	Matte Tin plated

USB Connector series

KLS1-234 MICRO USB 3.0 B TYPE



Electrical Characteristics
Rated Current :0.5A
Rated Voltage: 30V AC (rms)
Dielectric withstanding voltage: 100V DC for 1 min.
Insulation Resistance : 100 MΩ Min.
Contact resistance: 50 mΩ max.
Temperature rating:-30 C ~ +80 C

Materials
Housing: LCP UL 94V-0, black color
Contacts: Copper alloy
Pin Plated: Gold plated or matte tin plated

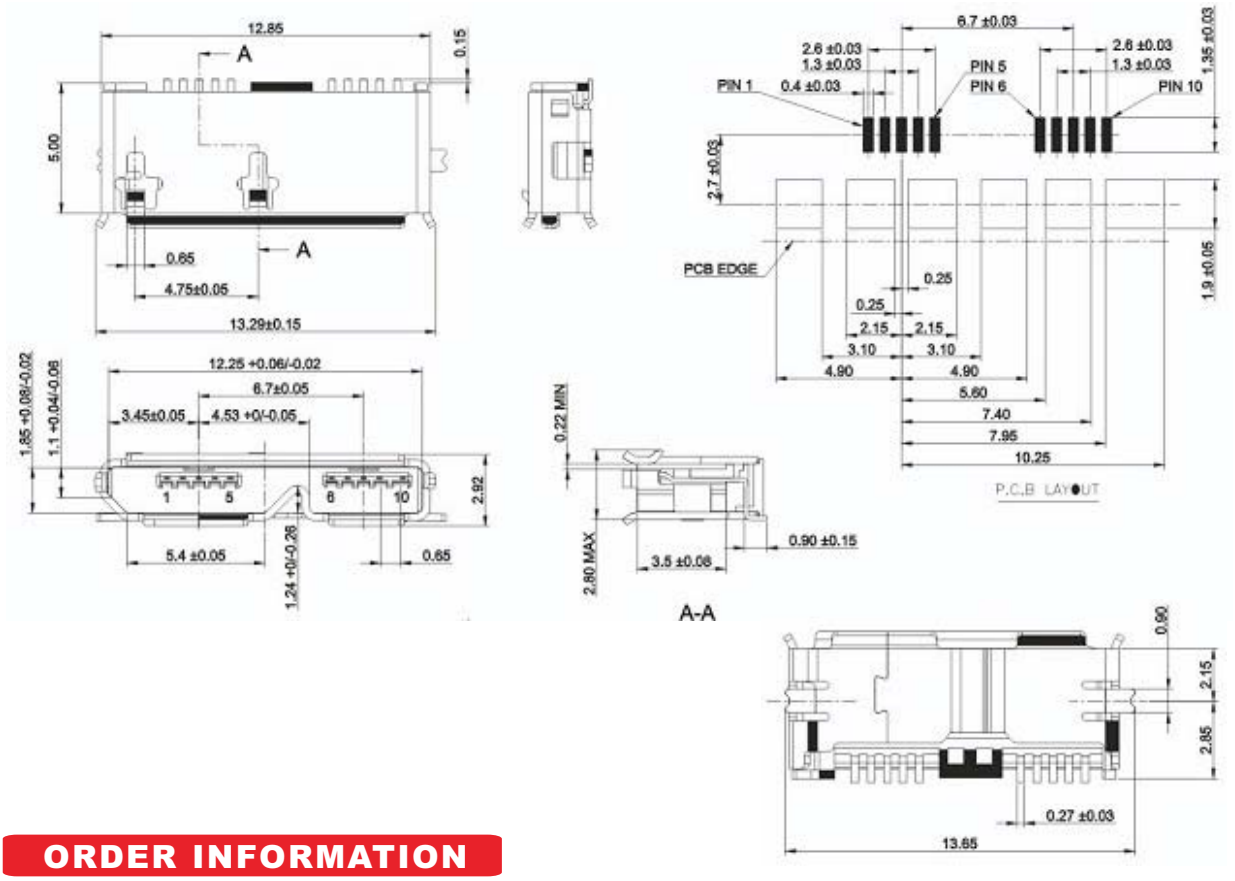

ORDER INFORMATION

KLS1-234- 0 - R

SERIES NO.

P	Blister tray packing
R	Reel packing

0	Gold plated
1	Matte Tin plated

版次	工程变更号	变更内容	变更日期	变更人员
A	—	图纸新设计	2007/12/01	WZQ

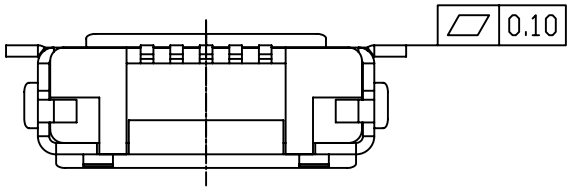

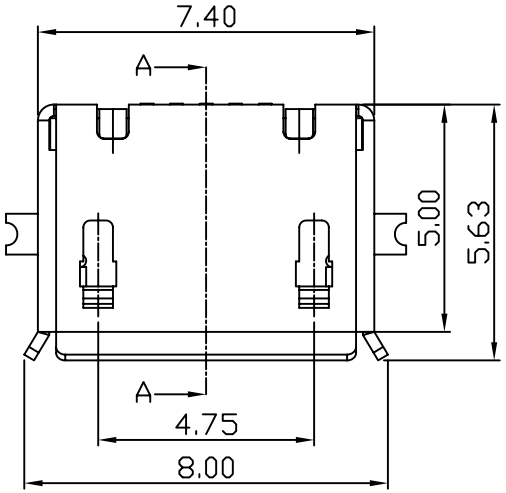

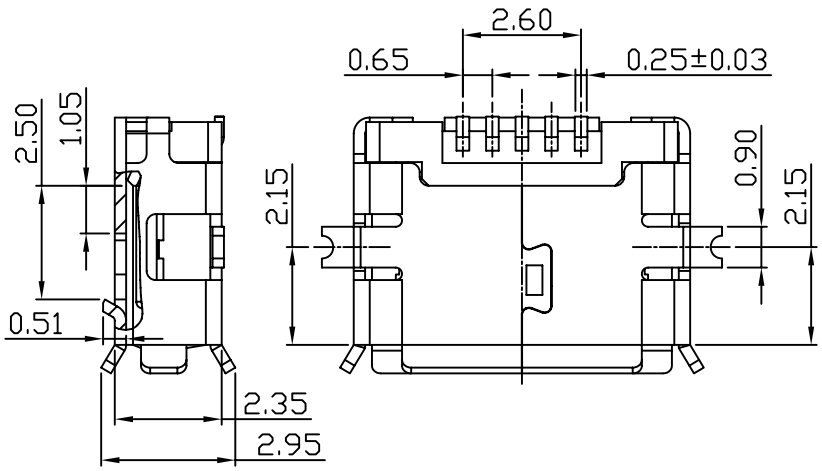

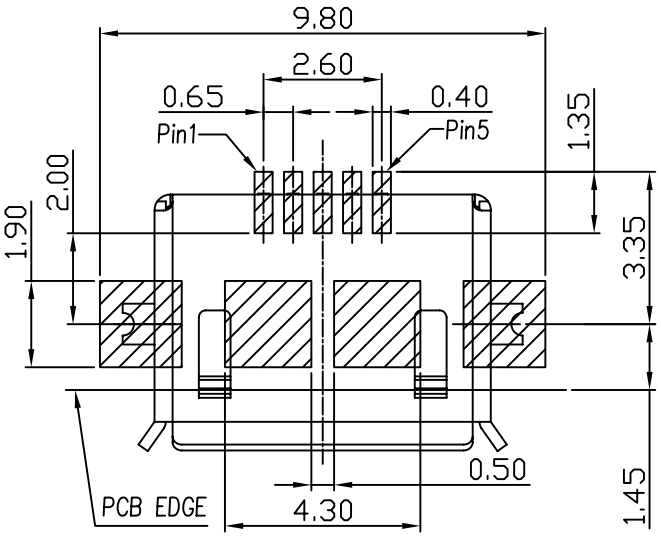

RECOMMANDED PCB LAYOUT

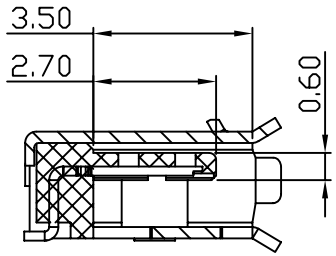

剖视图A－A

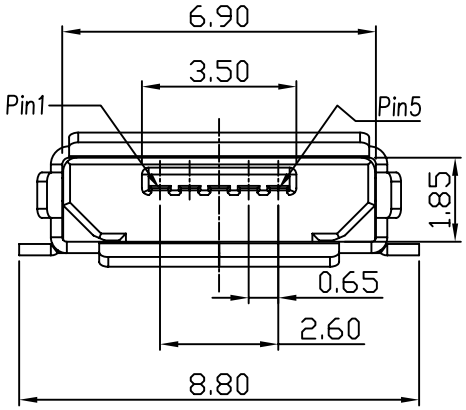

备注:
1. 材质:
1.1胶芯: LCP UL94V-0
1.2端子: C2680R-H,镍底, 镀金Xμ"
1.3外壳: C2680R-H, 表面镀雾锡100μ"或全金1μ"
2. 主要特性:
2.1额定电流: 1A
2.2接触阻抗: 30mΩ MAX
2.3绝缘阻抗: 100MΩ MIN 250V DC
2.4耐压测试: 250V AC
2.5沾锡性: 温度235±5℃, 时间5±0.5s
2.6退PIN力: 0.5kgf MIN
2.7整体插入力: 3.57kgf MAX 整体拔出力:1.00kgf MIN
2.8使用寿命: 10000次
2.9耐温性:烤箱测试: 温度250±5℃, 时间2分钟
2.10工作温度: -30℃~+80℃
3. 圆圈标记尺寸表示重点检验尺寸 ,CPK值不小于1.33

KLS Electronic co.,LTD

未标注公差值: .0=±0.25 .00=±0.15 .000=±0.05 角度: ±1°	品名规格	MICRO USB 5PIN AB TYPE 母座(无柱) KLS1-236						
	料号	A12SB3005A15		图号	A12SB3005A15			
	页码	1/2	比例 1:1	单位	mm	纸张	A4	版次 A
	批准		审核		绘图	王志强		

Mini USB Connector Series

KLS1-229-4FB Mini-USB-A4F PCB Right Angle SMT Type

MATERIAL
Insulator: LCP Rated UL94V-0
Contacts: Phosphor Bronze
Shell: Phosphor Bronze
Pin Plated: Gold 3u" over 50u" nickel

ELECTRICAL
Current Rating: 1.0 Amps Max.
Contact Resistance: 30 mΩ Max
Insulation Resistance: 1000 MΩ Min
Dielectric Withstanding Voltage:500 VAC / Minute

MECHANICAL
Mating force: 3.0Kg Max. (29. 4N)
Unmating force: 0. 5Kg Min (4. 9N)
Contact Retention: 0.3 Kg / Pin Min. (2.94N)
Operating Temperature: -55ºC ~ +105ºC



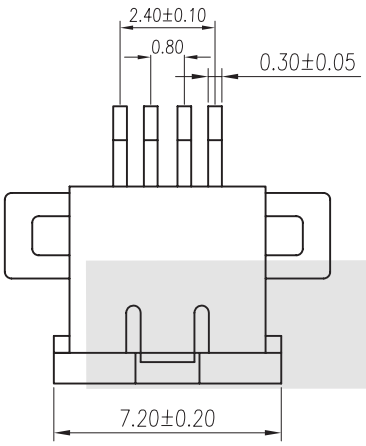

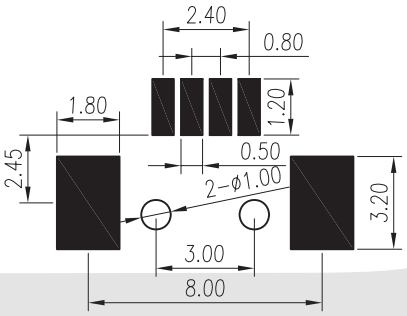

RECOMMANDED PCB LAYOUT

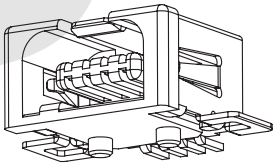

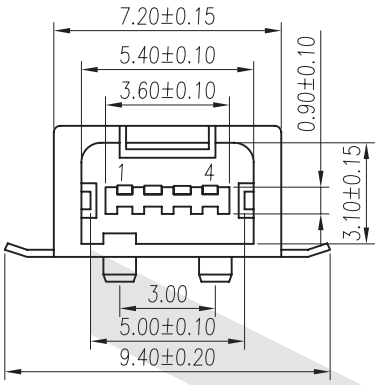

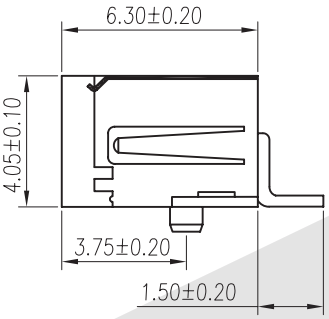

ORDER INFORMATION

Product NO.: KLS1 - 229-4FB - W

Pos. NO.
Mini-USB-A4F PCB
Right Angle SMT Type
Color: W=WHITE
B=BLACK

Mini USB Connector Series

KLS1-229-5FA Mini-USB-B5F PCB Right Angle DIP Type

MATERIAL
Insulator: PBT Rated UL94V-0
Contacts: Phosphor Bronze
Shell: Phosphor Bronze
Pin Plated: Gold 3u" over 50u" nickel

ELECTRICAL
Current Rating: 1.0 Amps Max.
Contact Resistance: 30 mΩ Max
Insulation Resistance: 1000 MΩ Min
Dielectric Withstanding Voltage:500 VAC / Minute

MECHANICAL
Mating force: 3.0Kg Max. (29. 4N)
Unmating force: 0. 5Kg Min (4. 9N)
Contact Retention: 0.3 Kg / Pin Min. (2.94N)
Operating Temperature: -55°C ~ +105°C



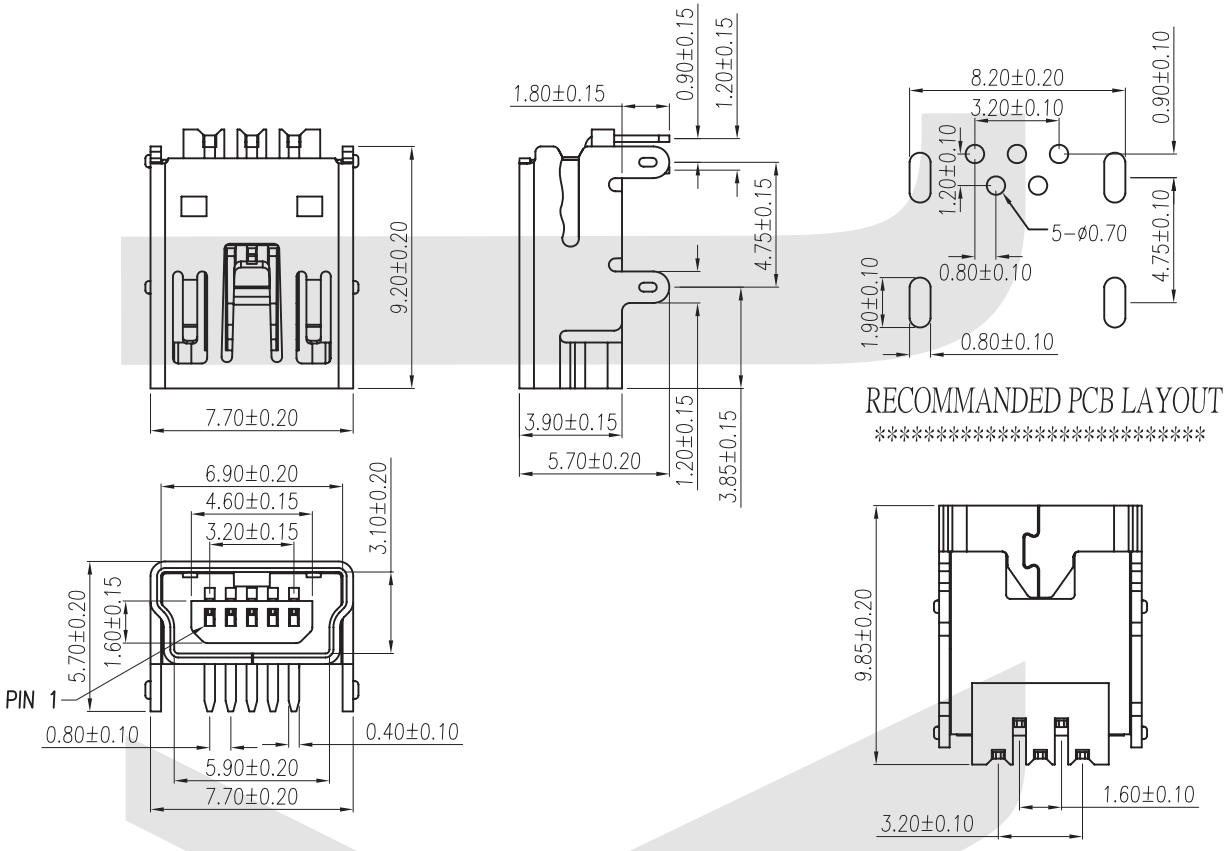

ORDER INFORMATION

Product NO.: KLS1 - 229-5FA - W

Pos. NO.
Mini-USB 5P Dip Type

Color: W=WHITE
B=BLACK

Mini USB Connector Series

KLS1-229-5FB Mini-USB-B5F PCB Right Angle SMT Type

MATERIAL
Insulator: LCP Rated UL94V-0
Contacts: Phosphor Bronze
Shell: Phosphor Bronze
Pin Plated: Gold 3u" over 50u" nickel

ELECTRICAL
Current Rating: 1.0 Amps Max.
Contact Resistance: 30 mΩ Max
Insulation Resistance: 1000 MΩ Min
Dielectric Withstanding Voltage:500 VAC / Minute

MECHANICAL
Mating force: 3.0Kg Max. (29. 4N)
Unmating force: 0. 5Kg Min (4. 9N)
Contact Retention: 0.3 Kg / Pin Min. (2.94N)
Operating Temperature: -55°C ~ +105°C



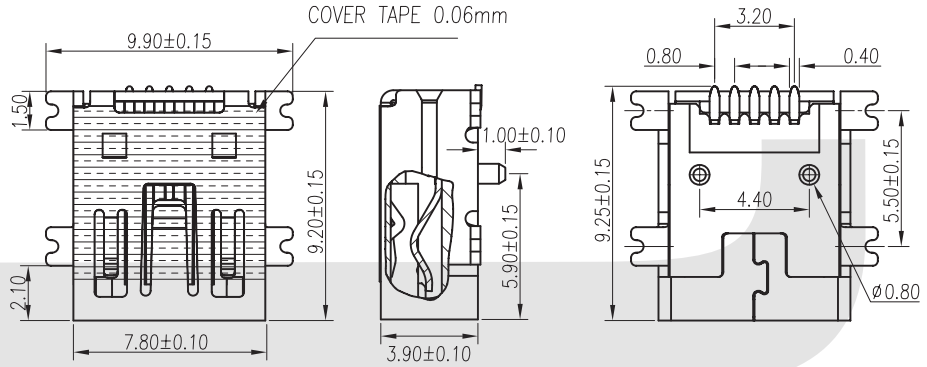

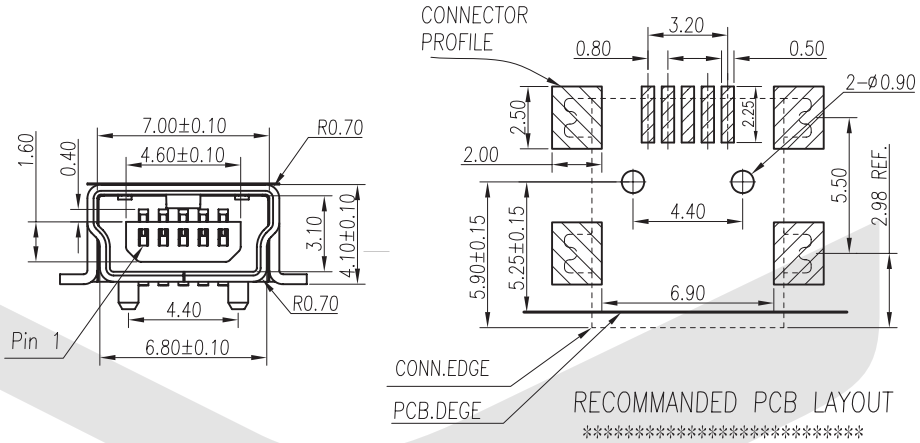

ORDER INFORMATION

Product NO.: KLS1 - 229-5FB - W

Pos. NO.
Mini-USB 5P SMT Type

Color: W=WHITE
B=BLACK

Mini USB Connector Series

KLS1-229-5FC Mini-USB-B5F PCB Straight DIP Type

MATERIAL
Insulator: PBT Rated UL94V-0
Contacts: Phosphor Bronze
Shell: Brass
Pin Plated: Gold 3u" over 50u" nickel

ELECTRICAL
Current Rating: 1.0 Amps Max.
Contact Resistance: 30 mΩ Max
Insulation Resistance: 1000 MΩ Min
Dielectric Withstanding Voltage:500 VAC / Minute

MECHANICAL
Mating force: 3.0Kg Max. (29. 4N)
Unmating force: 0. 5Kg Min (4. 9N)
Contact Retention: 0.3 Kg / Pin Min. (2.94N)
Operating Temperature: -55°C ~ +105°C

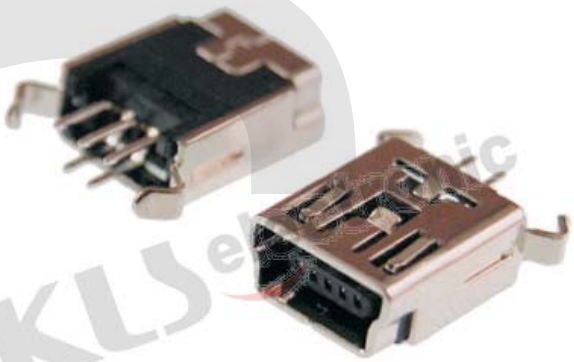

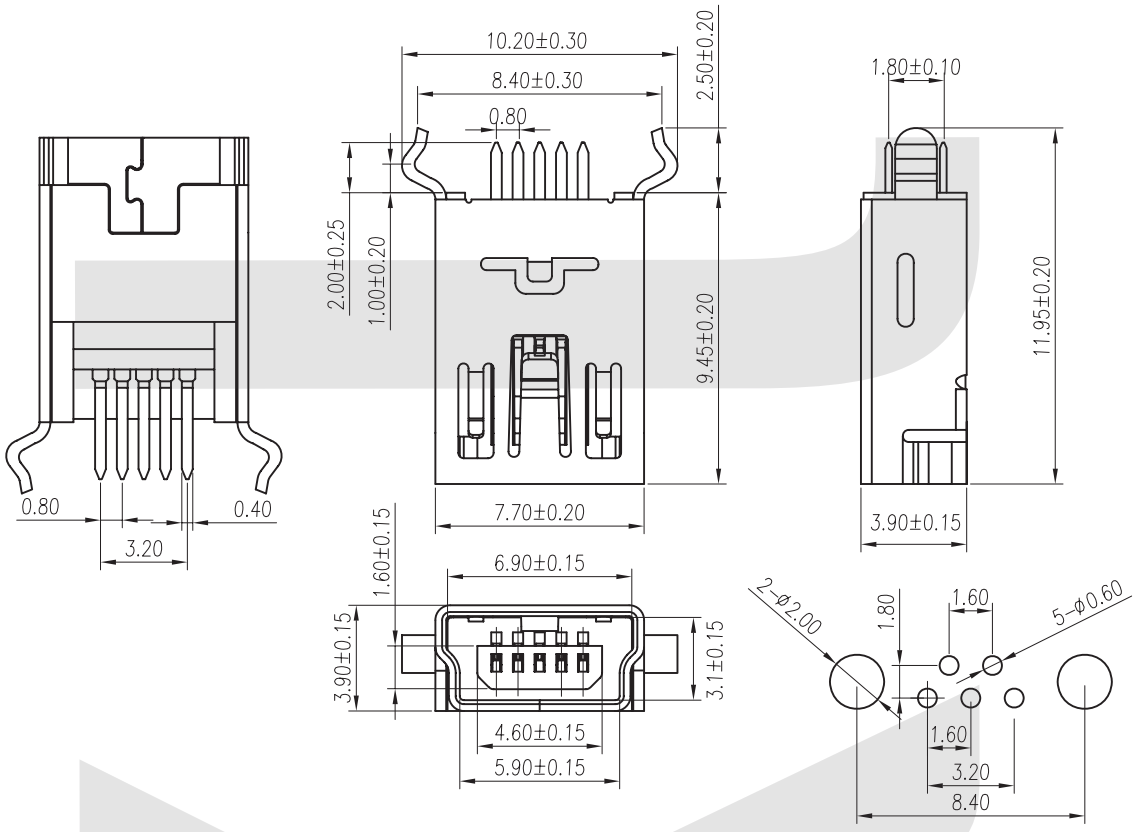

RECOMMANDED PCB LAYOUT

ORDER INFORMATION

Product NO.: KLS1 - 229-5FC - W

- KLS1 — Pos. NO.
- 229-5FC — Mini-USB 5P PCB Straight DIP Type
- W — Color: W=WHITE, B=BLACK

Mini USB Connector Series

KLS1-229-5FD Mini-USB-B5F PCB Right Angle SMT Type DIP Shell

MATERIAL
Insulator: LCP Rated UL94V-0
Contacts: Phosphor Bronze
Shell: Phosphor Bronze
Pin Plated: Gold 3u" over 50u" nickel

ELECTRICAL
Current Rating: 1.0 Amps Max.
Contact Resistance: 30 mΩ Max
Insulation Resistance: 1000 MΩ Min
Dielectric Withstanding Voltage:500 VAC / Minute

MECHANICAL
Mating force: 3.0Kg Max. (29. 4N)
Unmating force: 0. 5Kg Min (4. 9N)
Contact Retention: 0.3 Kg / Pin Min. (2.94N)
Operating Temperature: -55ºC ~ +105ºC

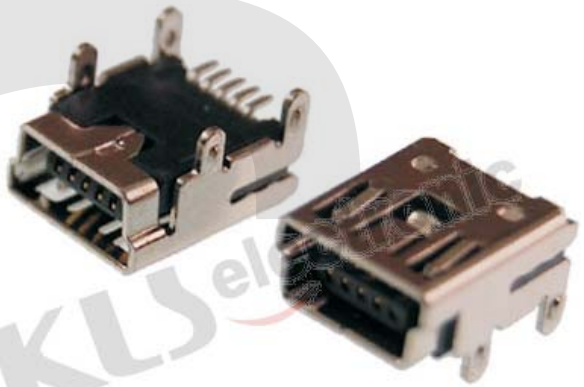

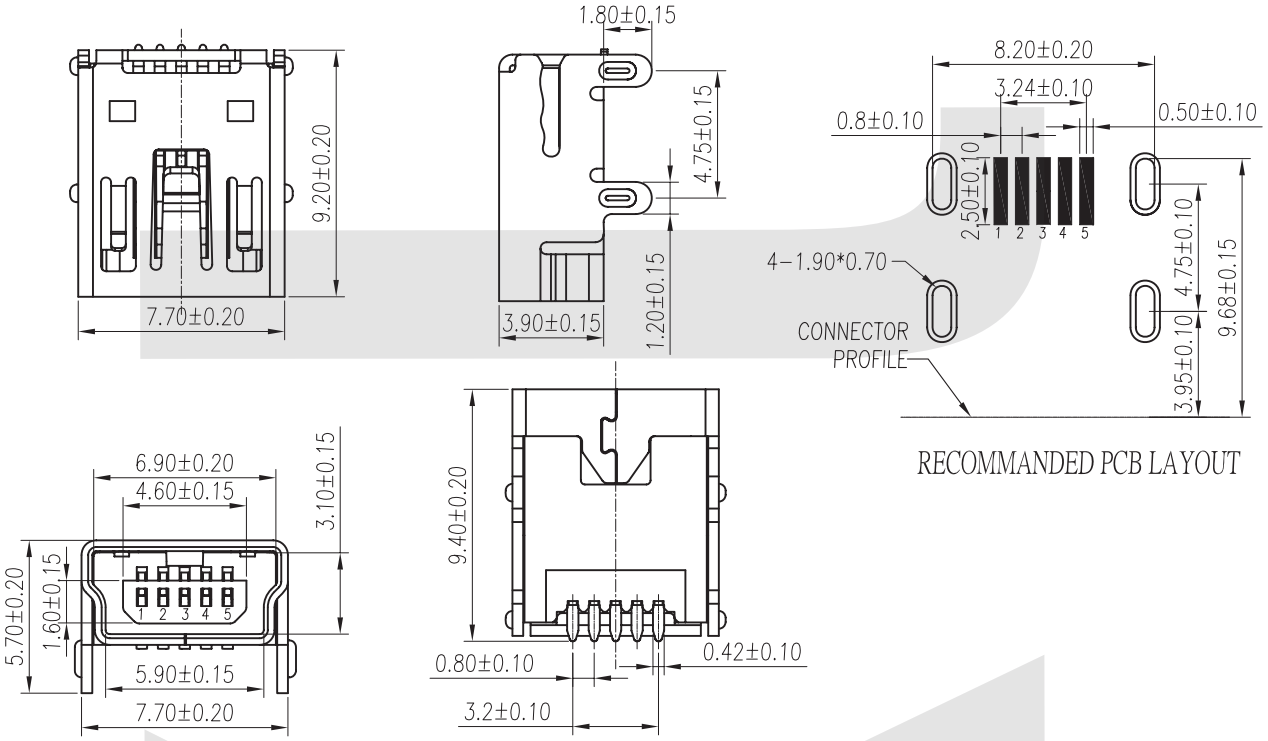

ORDER INFORMATION

Product NO.: KLS1 - 229-5FD - W

Pos. NO.
Mini-USB 5P SMT Type DIP Shell

Color: W=WHITE
B=BLACK

Mini USB Connector Series

KLS1-232-5P Mini-USB-B5M Solder Type

MATERIAL
Insulator: PBT Rated UL94V-0
Contacts: Brass
Shell: Cold Rolled Steel
Pin Plated: Gold 3u" over 50u" nickel

ELECTRICAL
Current Rating: 1.0 Amps Max.
Contact Resistance: 30 mΩ Max
Insulation Resistance: 1000 MΩ Min
Dielectric Withstanding Voltage:500 VAC / Minute

MECHANICAL
Mating force: 3.0Kg Max. (29. 4N)
Unmating force: 0. 5Kg Min (4. 9N)
Contact Retention: 0.3 Kg / Pin Min. (2.94N)
Operating Temperature: -55ºC ~ +105ºC



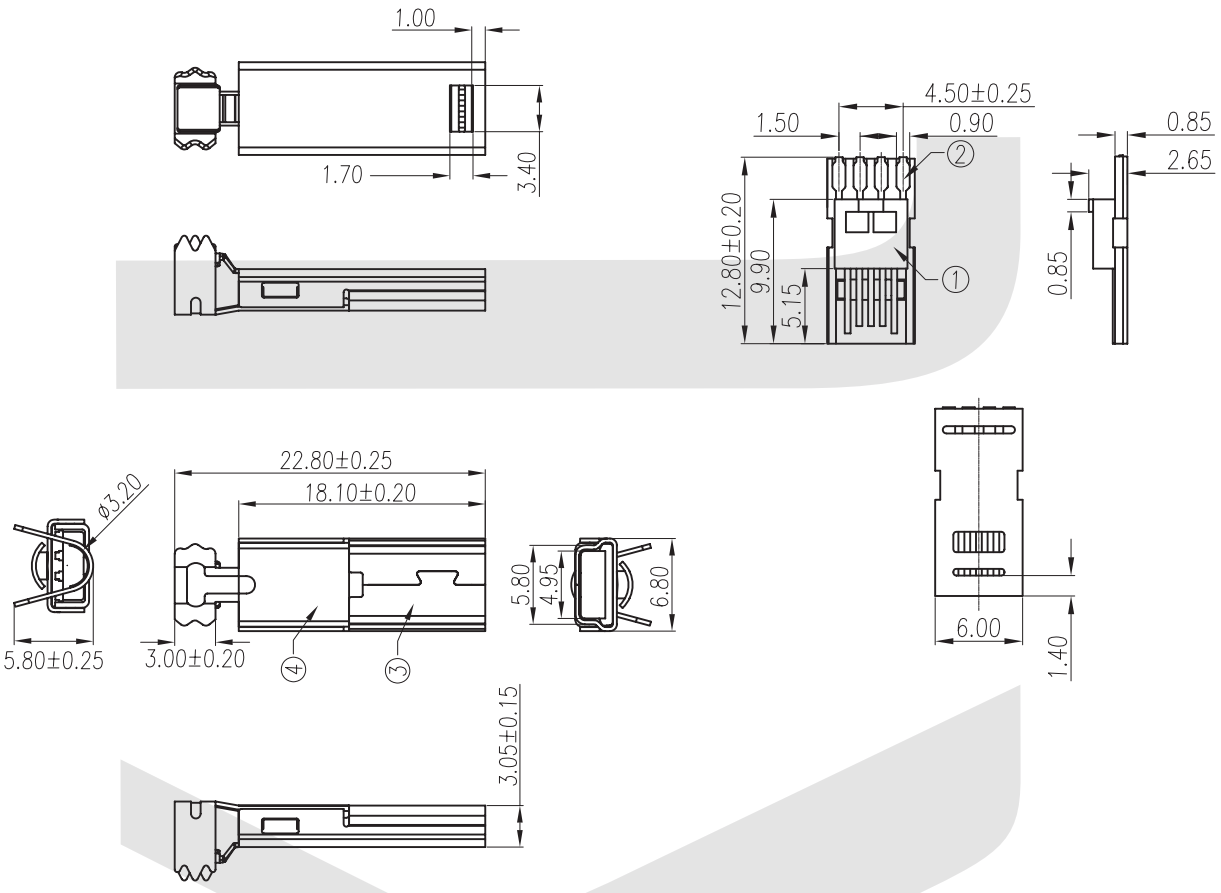

ORDER INFORMATION

Product NO.: KLS1 - 232-5P - W

- KLS1 - Pos. NO.
- 232-5P - Mini-USB-B5M Solder Type
- W - Color: W=WHITE, B=BLACK

Mini USB Connector Series

KLS1-231-4P Mini-USB-B4F PCB RIGHT ANGLE SMT TYPE

MATERIAL
Insulator: LCP Rated UL94V-0
Contacts: Phosphor Bronze
Shell: Phosphor Bronze
Pin Plated: Gold 3u" over 50u" nickel

ELECTRICAL
Current Rating: 1.0 Amps Max.
Contact Resistance: 30 mΩ Max
Insulation Resistance: 1000 MΩ Min
Dielectric Withstanding Voltage:500 VAC / Minute

MECHANICAL
Mating force: 3.0Kg Max. (29. 4N)
Unmating force: 0. 5Kg Min (4. 9N)
Contact Retention: 0.3 Kg / Pin Min. (2.94N)
Operating Temperature: -55ºC ~ +105ºC



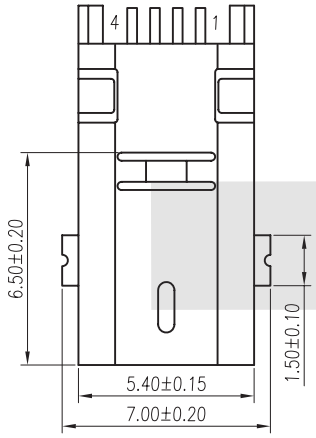

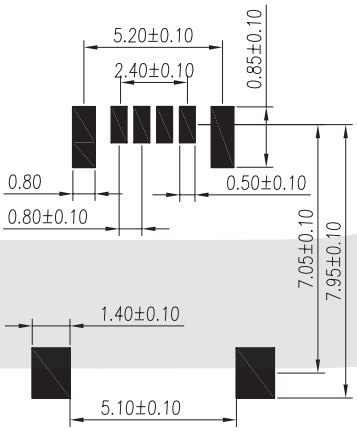

RECOMMANDED PCB LAYOUT

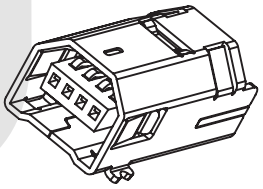

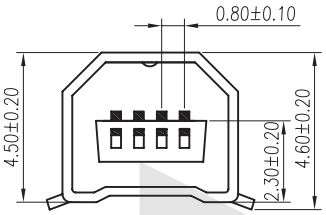

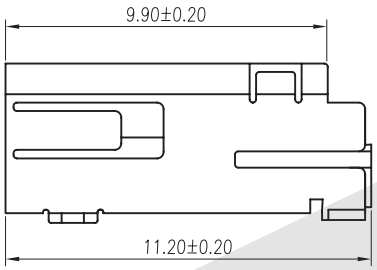

ORDER INFORMATION

Product NO.: KLS1 - 231-4P - W

Pos. NO.
Mini-USB-B4F PCB
RIGHT ANGLE SMT TYPE
Color: W=WHITE
B=BLACK

Mini USB Connector Series

KLS1-230-4P Mini-USB-A4M Solder Assembly Type

MATERIAL
Insulator: PBT Rated UL94V-0
Contacts: Phosphor Bronze
Shell: Stainless Steel
Pin Plated: Gold 3u" over 50u" nickel

ELECTRICAL
Current Rating: 1.0 Amps Max.
Contact Resistance: 30 mΩ Max
Insulation Resistance: 1000 MΩ Min
Dielectric Withstanding Voltage:500 VAC / Minute

MECHANICAL
Mating force: 3.0Kg Max. (29. 4N)
Unmating force: 0. 5Kg Min (4. 9N)
Contact Retention: 0.3 Kg / Pin Min. (2.94N)
Operating Temperature: -55ºC ~ +105ºC



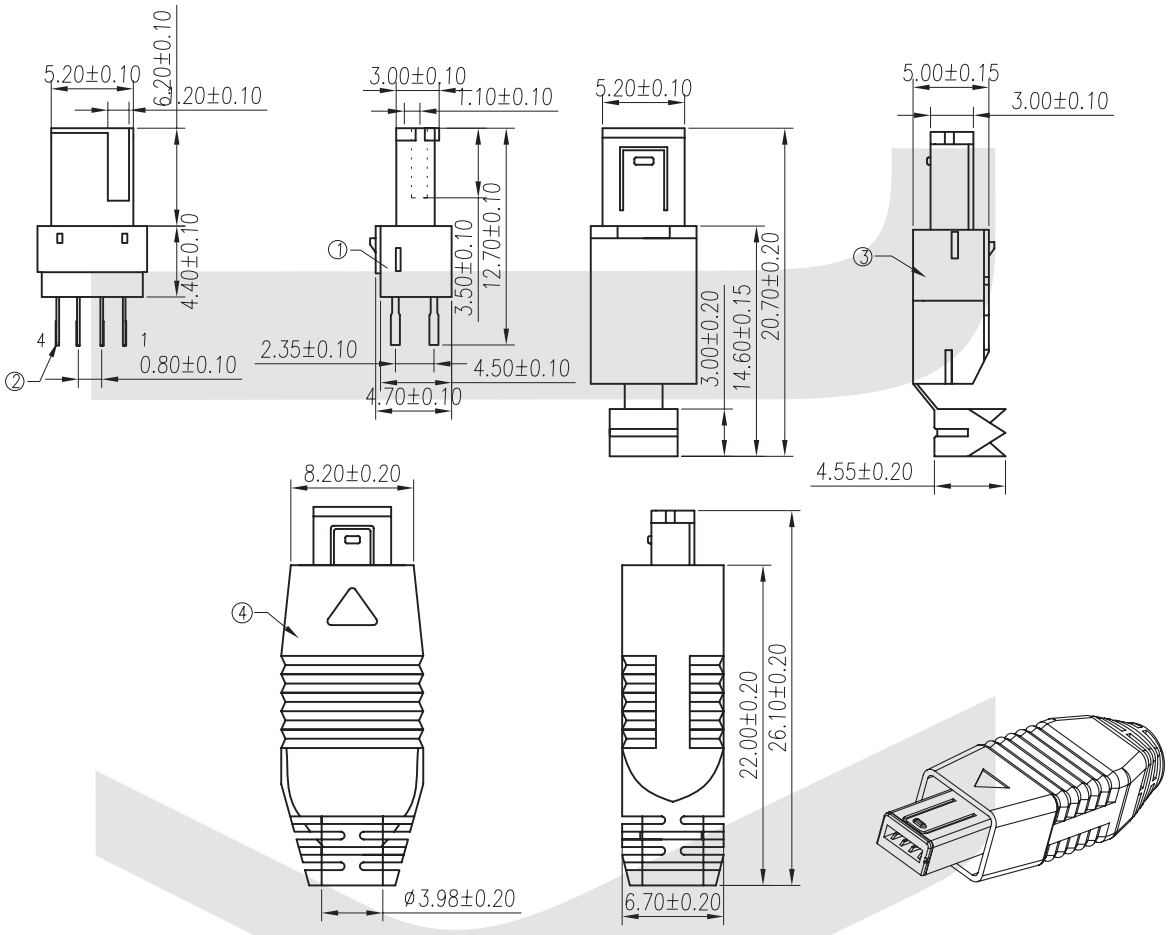

ORDER INFORMATION

Product NO.: KLS1 - 230-4P - W

Pos. NO.
Mini-USB 4P Male
SOLDER ASSEMBLY TYPE
Color: W=WHITE
B=BLACK

USB Series

KLS1-180A USB-AM PCB Right Angle.DIP Type

Material:
Housing: 30% Glass filled PBT UL94V-0
Contacts: Phosphor Bronze
Pin Plated: Gold 3u" over 50u" nickel

Electrical Characteristics:
Current Rating: 1 AMP
Insulator Resistance: 1000M Ohm min. at 500 VDC
Dielectric Withstanding Voltage:500 VAC / Minute
Contact Resistance: 30m Ohm max.
Temperature: -55ºC ~+105ºC



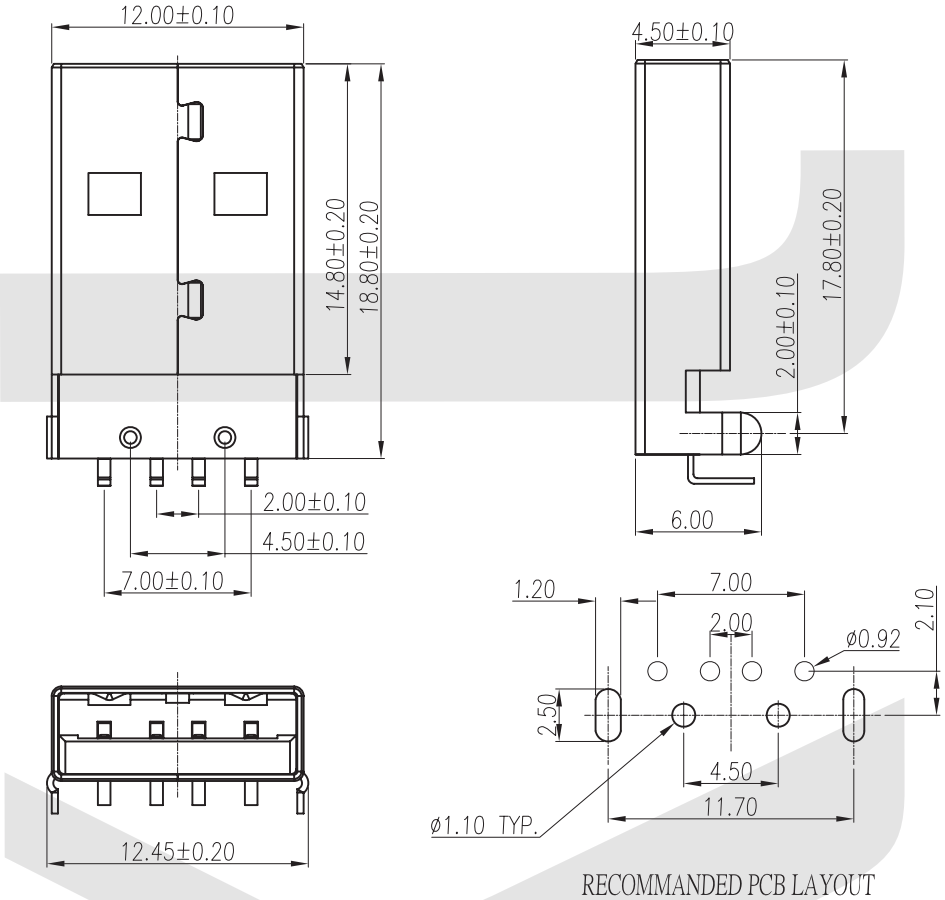

RECOMMANDED PCB LAYOUT

ORDER INFORMATION

Product NO.: KLS1 - 180A - W

Pos. NO.
USB-AM PCB
Right Angle.DIP Type
Color: W=White B=Black

USB Series

KLS1-180B USB-AM PCB Right Angle.SMT Type

Material:
Housing: 30% Glass filled PBT UL94V-0
Contacts: Phosphor Bronze
Pin Plated: Gold 3u" over 50u" nickel

Electrical Characteristics:
Current Rating: 1 AMP
Insulator Resistance: 1000M Ohm min. at 500 VDC
Dielectric Withstanding Voltage:500 VAC / Minute
Contact Resistance: 30m Ohm max.
Temperature: -55°C ~+105°C



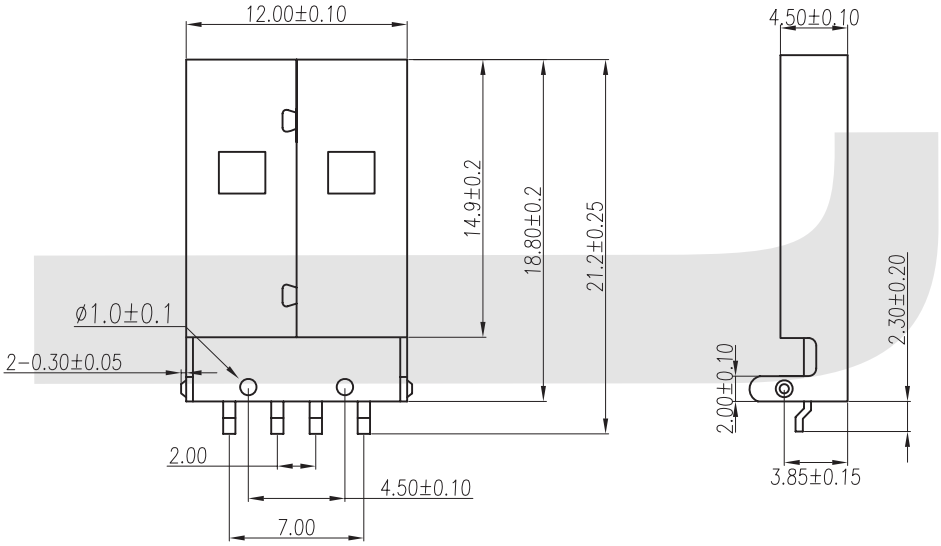

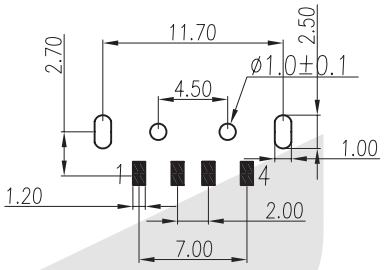

RECOMMANDED PCB LAYOUT

ORDER INFORMATION

Product NO.: KLS1 - 180B - W

Pos. NO.
USB-AM PCB
Right Angle.SMT Type

Color: W=White B=Black

USB Series

KLS1-181A USB-AF PCB Right Angle.DIP Type

Material:
Housing: 30% Glass filled PBT UL94V-0
Contacts: Phosphor Bronze
Pin Plated: Gold 3u" over 50u" nickel

Electrical Characteristics:
Current Rating: 1 AMP
Insulator Resistance: 1000M Ohm min. at 500 VDC
Dielectric Withstanding Voltage:500 VAC / Minute
Contact Resistance: 30m Ohm max.
Temperature: -55ºC ~+105ºC



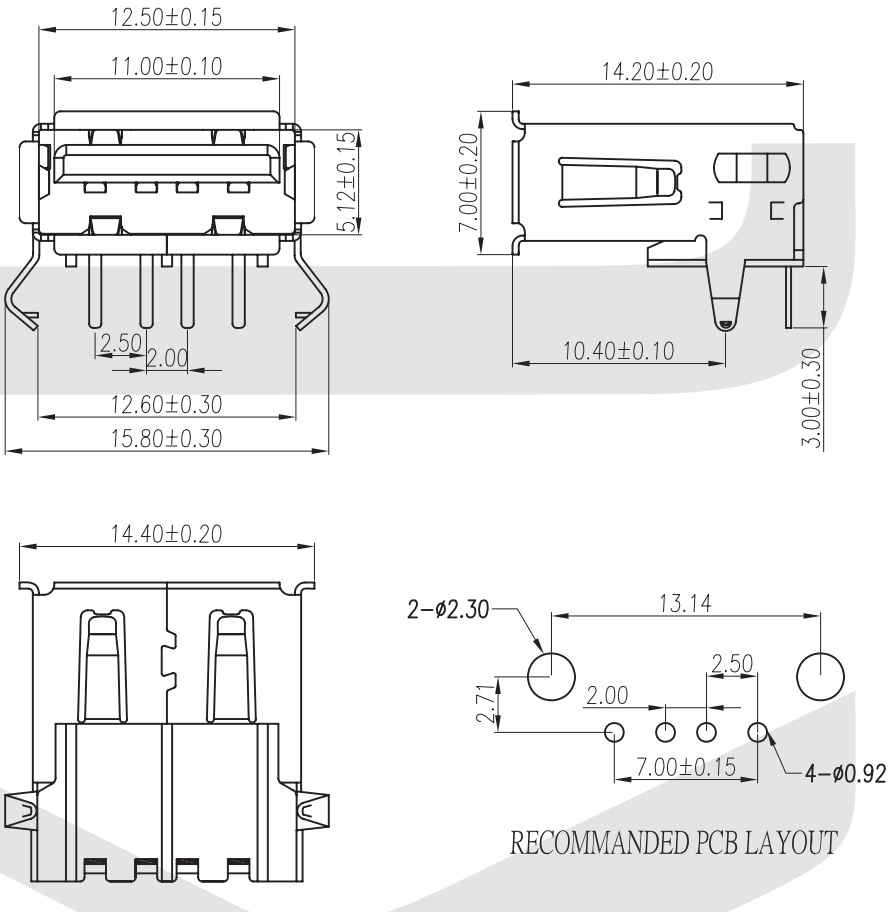

ORDER INFORMATION

Product NO.: KLS1 - 181A - B

Pos. NO.
USB-AF PCB
Right Angle.DIP Type

Color: W=White B=Black

USB Series

I

KLS1-181B USB-AF PCB Straight.DIP Type

Material:
Housing: 30% Glass filled PBT UL94V-0
Contacts: Phosphor Bronze
Pin Plated: Gold 3u" over 50u" nickel

Electrical Characteristics:
Current Rating: 1 AMP
Insulator Resistance: 1000M Ohm min. at 500 VDC
Dielectric Withstanding Voltage:500 VAC / Minute
Contact Resistance: 30m Ohm max.
Temperature: -55ºC ~+105ºC



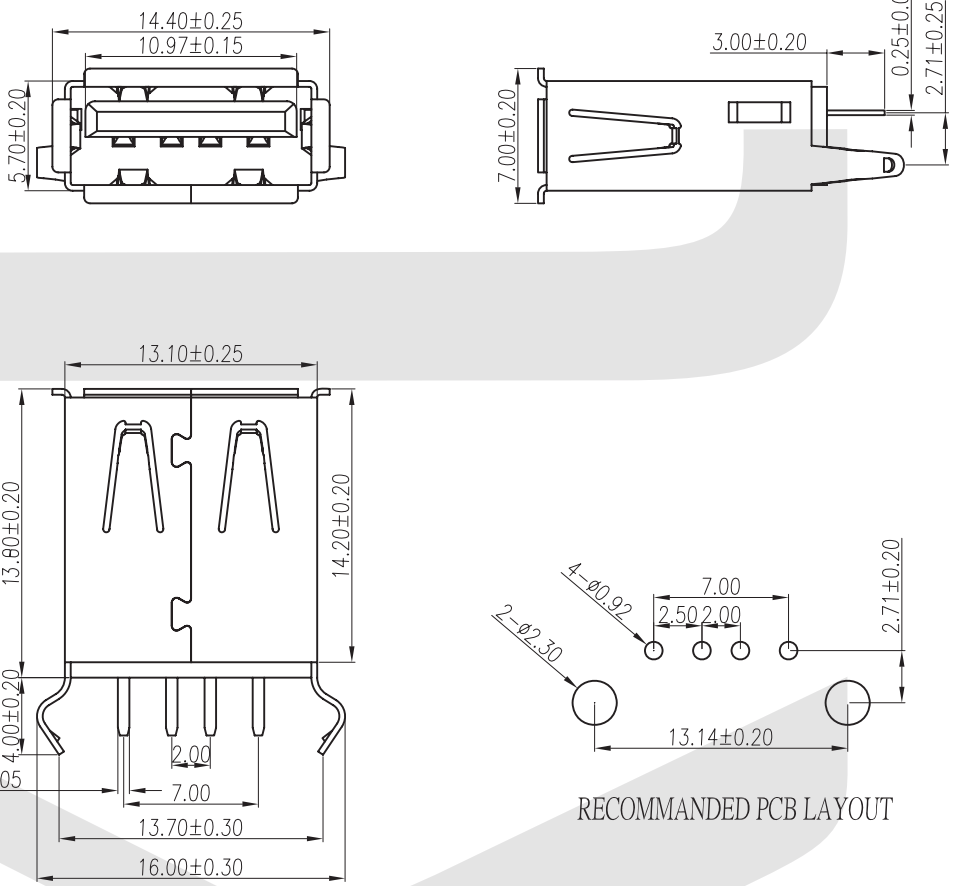

ORDER INFORMATION

Product NO.: KLS1 - 181B - B

Pos. NO.
USB-AF PCB
Straight.DIP Type

Color: W=White B=Black

USB Series

KLS1-181B2 USB-AF PCB Straight.DIP Type

Material:

Housing: 30% Glass filled PBT UL94V-0
Contacts: Phosphor Bronze
Pin Plated: Gold 3u" over 50u" nickel

Electrical Characteristics:

Current Rating: 1 AMP
Insulator Resistance: 1000M Ohm min. at 500 VDC
Dielectric Withstanding Voltage:500 VAC / Minute
Contact Resistance: 30m Ohm max.
Temperature: -55ºC ~+105ºC



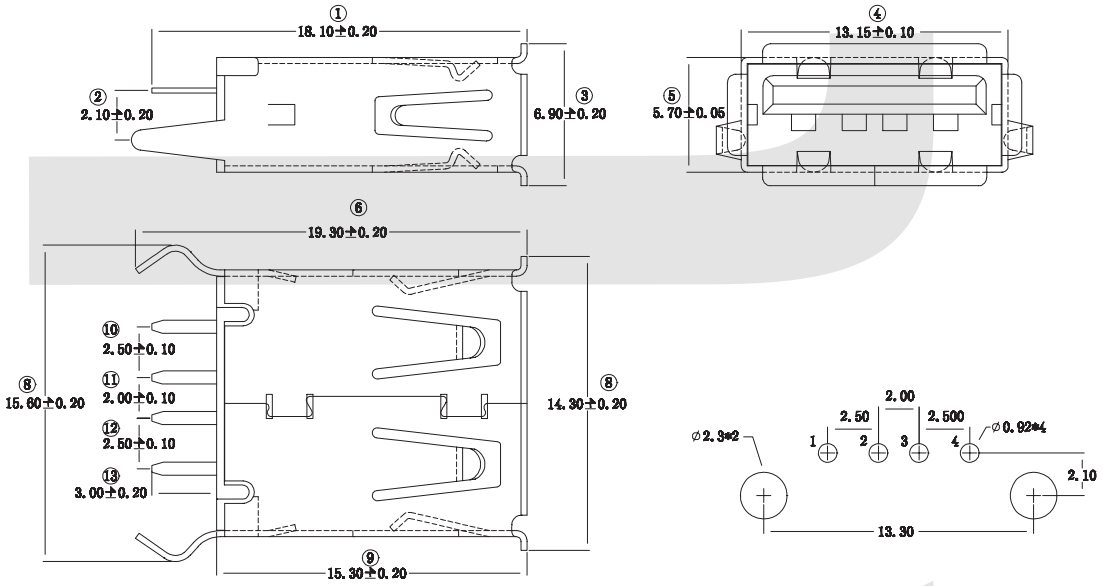

ORDER INFORMATION

Product NO.: KLS1 -181B2- B

Pos. NO.
USB-AF PCB
Straight.DIP Type

Color: W=White B=Black

USB Series

KLS1-181C USB-AF SMT Type

Material:
Housing: 30% Glass filled PBT UL94V-0
Contacts: Brass
Pin Plated: Gold 3u" over 50u" nickel

Electrical Characteristics:
Current Rating: 1 AMP
Insulator Resistance: 1000MΩ min. at 500 VDC
Dielectric Withstanding Voltage:500 VAC / Minute
Contact Resistance: 30mΩ max.
Temperature: -55ºC ~+105ºC

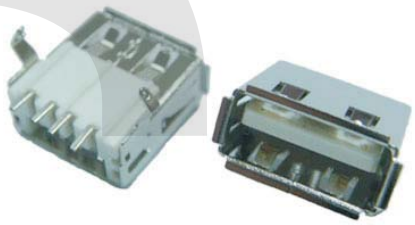

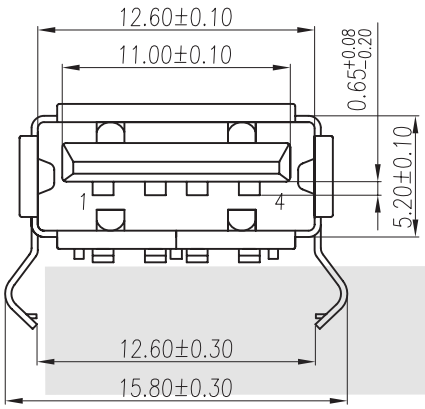

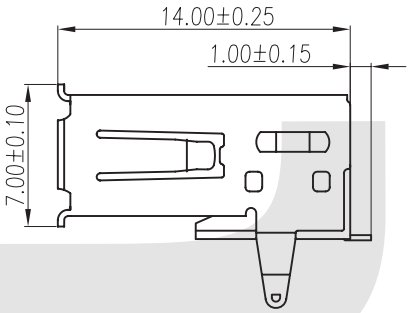

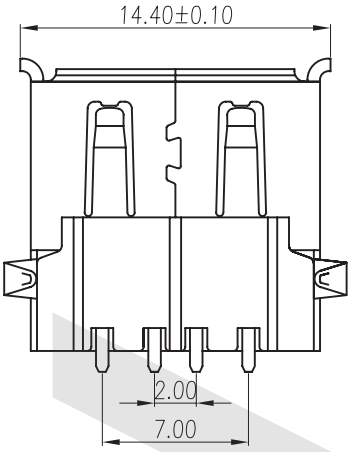

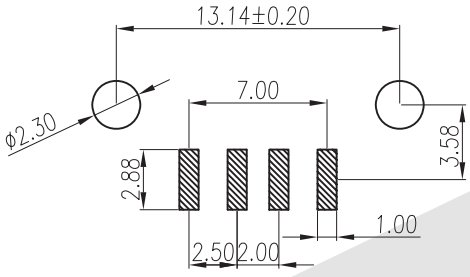

P.C.B. LAYOUT

ORDER INFORMATION

Product NO.: KLS1 - 181C - B

Pos. NO.
USB-AF SMT Type

Color: W=White B=Black

USB Series

KLS1-181D USB-AF Solder Type,Short Shell

Material:
Housing: 30% Glass filled PBT UL94V-0
Contacts: Phosphor Bronze
Pin Plated: Gold 3u" over 50u" nickel

Electrical Characteristics:
Current Rating: 1 AMP
Insulator Resistance: 1000M Ohm min. at 500 VDC
Dielectric Withstanding Voltage:500 VAC / Minute
Contact Resistance: 30m Ohm max.
Temperature: -55ºC ~+105ºC



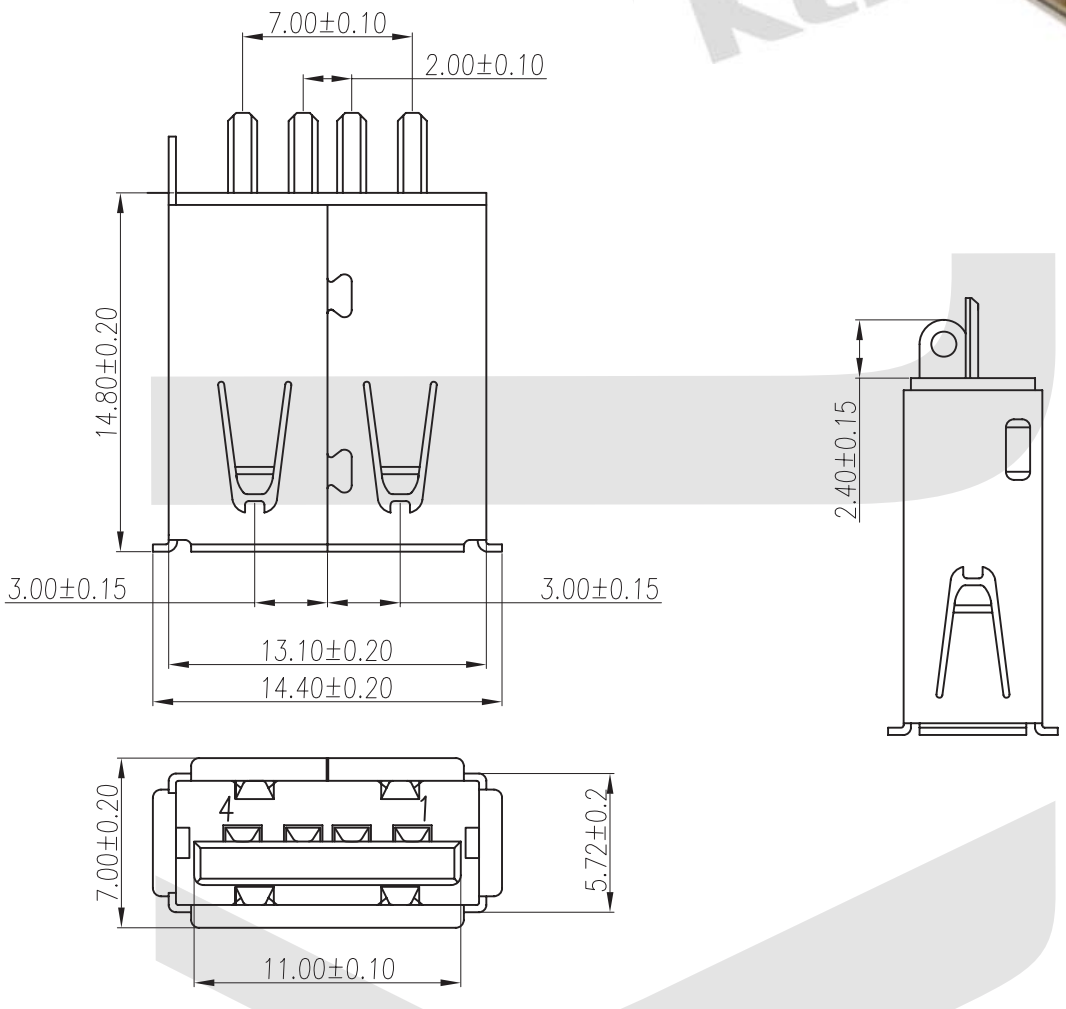

ORDER INFORMATION

Product NO.: KLS1 - 181D - B

Pos. NO.
USB-AF
Solder Type,Short Shell

Color: W=White B=Black

USB Connector series

KLS1-181E

Material
Housing: 30%GF, PBT UL 94V-0
Contact : Phosphor Bronze
Pin Plated: Gold 3u″ over 50u″ nickel

Electrical Characteristic
Current Rating: 1 AMP
Contact Resistance: 30mΩ Max.
Insulation Resistance: 1000MΩ Min. At 500VDC
Dielectric Withstanding Voltage: 500VAC/ Min.
Operating Temperature: -55 C~ +105 C



ORDER INFORMATION

Product NO. : KLS1-181E

Pos. NO.

USB Series

KLS1-182 USB-AM SOLDER TYPE

Material:

Housing: 30% Glass filled PBT UL94V-0
Contacts: Phosphor Bronze
Pin Plated: Gold 3u" over 50u" nickel

Electrical Characteristics:

Current Rating: 1 AMP
Insulator Resistance: 1000M Ohm min. at 500 VDC
Dielectric Withstanding Voltage:500 VAC / Minute
Contact Resistance: 30m Ohm max.
Temperature: -55°C ~+105°C



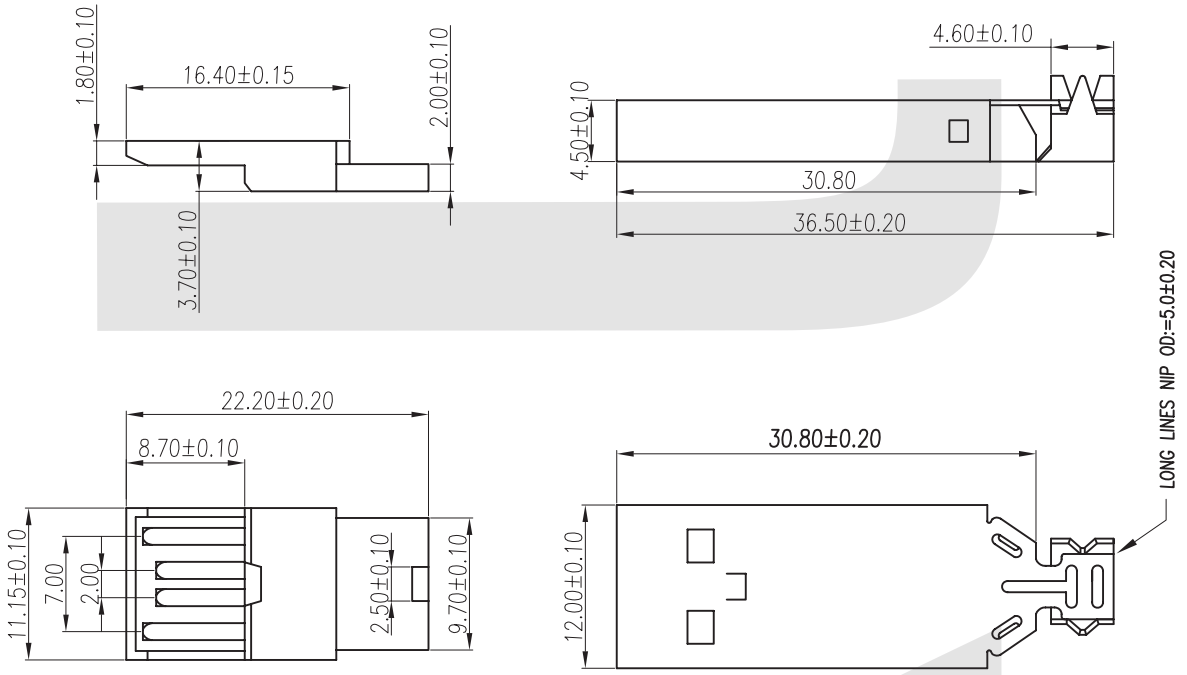

ORDER INFORMATION

Product NO.: KLS1 - 182 - B

- Pos. NO.
- USB-AM SOLDER TYPE
- Color: W=White B=Black

USB Series

KLS1-188 USB-AM Solder Type,Short Shell

Material:
Housing: 30% Glass filled PBT UL94V-0
Contacts: Phosphor Bronze
Pin Plated: Gold 3u" over 50u" nickel

Electrical Characteristics:
Current Rating: 1 AMP
Insulator Resistance: 1000M Ohm min. at 500 VDC
Dielectric Withstanding Voltage:500 VAC / Minute
Contact Resistance: 30m Ohm max.
Temperature: -55ºC ~+105ºC



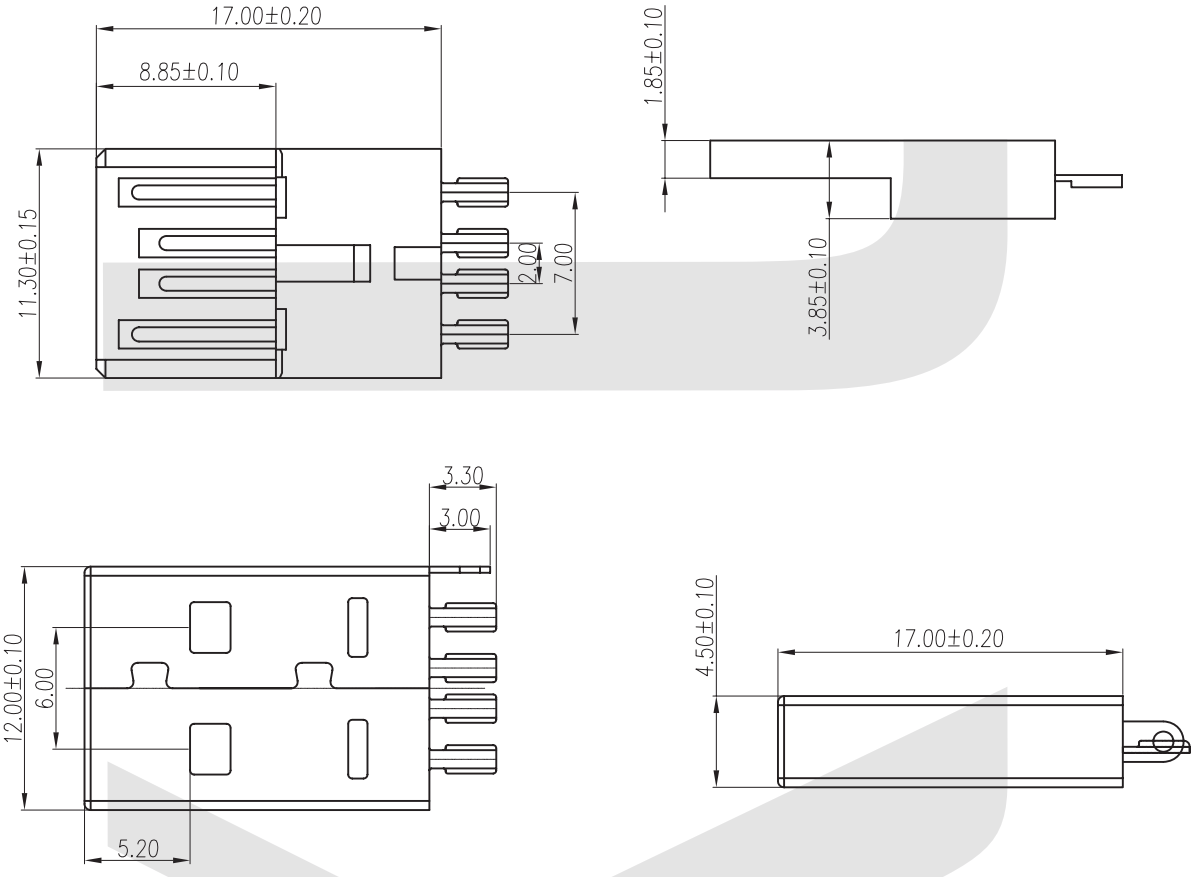

ORDER INFORMATION

Product NO.: KLS1 - 188 - B

Pos. NO.
USB-AM
Solder Type,Short Shell

Color: W=White B=Black

USB Series

I

KLS1-189 USB-AF PCB Straight DIP Double Ports Type

Material:
Housing: 30% Glass filled PBT UL94V-0
Contacts: Phosphor Bronze
Pin Plated: Gold 3u" over 50u" nickel

Electrical Characteristics:
Current Rating: 1 AMP
Insulator Resistance: 1000M Ohm min. at 500 VDC
Dielectric Withstanding Voltage:500 VAC / Minute
Contact Resistance: 30m Ohm max.
Temperature: -55°C ~+105°C



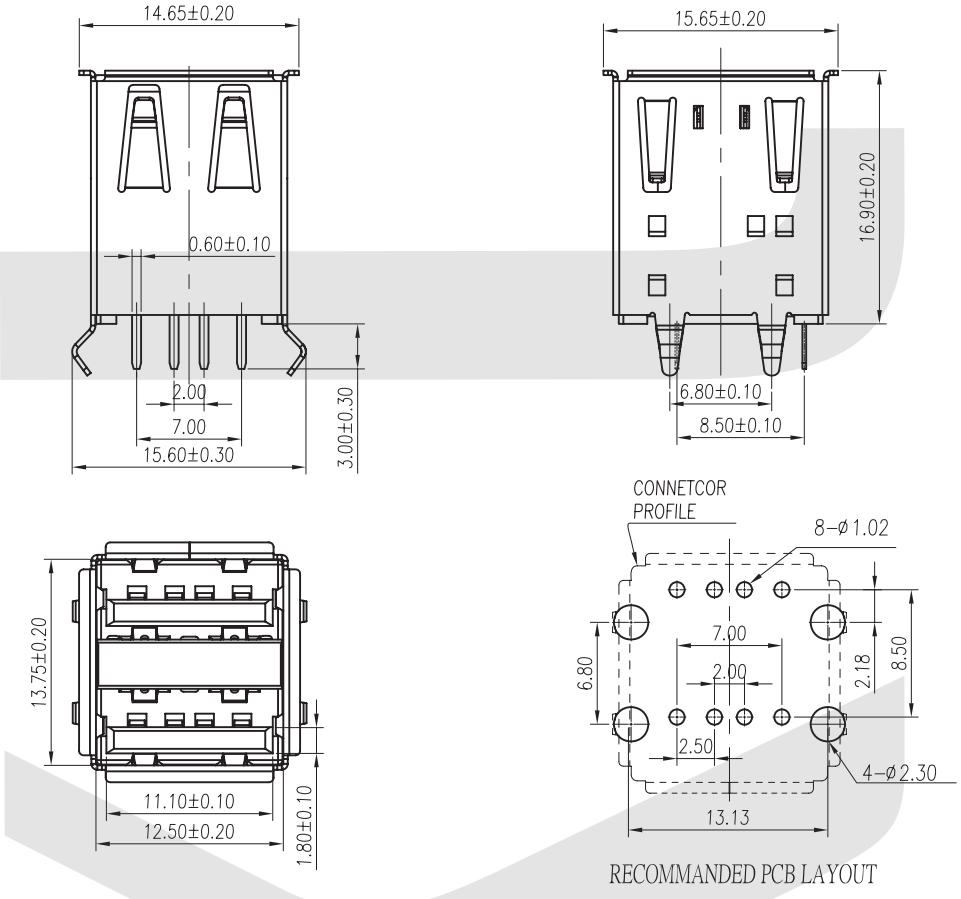

RECOMMANDED PCB LAYOUT

ORDER INFORMATION

Product NO.: KLS1 - 189 - B

Pos. NO.
USB-AF PCB
Straight DIP Double Ports Type

Color: W=White B=Black

USB Series

I

KLS1-190 USB-AF Solder Type,Double Ports

Material:
Housing: 30% Glass filled PBT UL94V-0
Contacts: Phosphor Bronze
Pin Plated: Gold 3u" over 50u" nickel

Electrical Characteristics:
Current Rating: 1 AMP
Insulator Resistance: 1000M Ohm min. at 500 VDC
Dielectric Withstanding Voltage:500 VAC / Minute
Contact Resistance: 30m Ohm max.
Temperature: -55ºC ~+105ºC



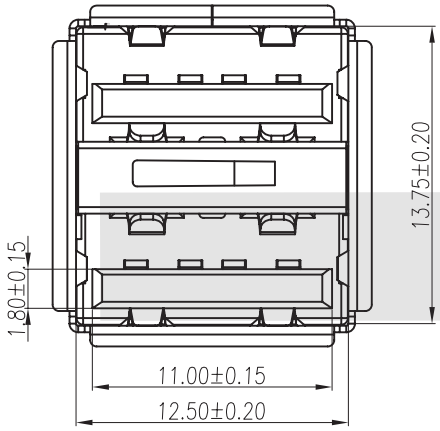

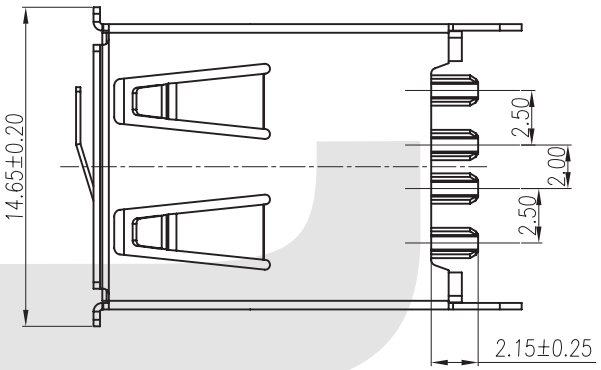

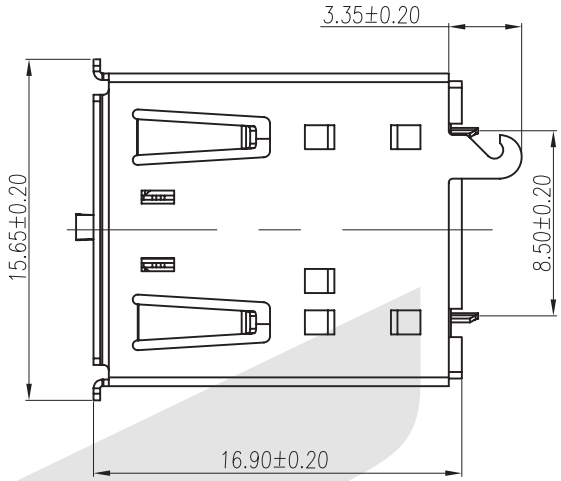

ORDER INFORMATION

Product NO.: KLS1 - 190 - B

Pos. NO.
USB-AF
Solder Type,Double Ports

Color: W=White B=Black

USB Connector Series

KLS1-191-4P USB-AF PCB Right Angle.DIP Erectness Type

MATERIAL
Insulator: PBT Rated UL94V-0
Contacts: Brass
Front Shell: Brass
Back Shell: Cold Rolled Steel
Pin Plated: Gold 3u" over 50u" nickel

ELECTRICAL
Current Rating: 1.5 Amps Max.
Contact Resistance: 30 mΩ Max
Insulation Resistance: 1000 MΩ Min
Dielectric Withstanding Voltage:500 VAC / Minute

MECHANICAL
Mating force: 3.57Kg Max. (35N)
Unmating force: 1.02Kg Min (10N)
Contact Retention: 0.3 Kg / Pin Min. (2.94N)
Operating Temperature: -55°C ~ +105°C



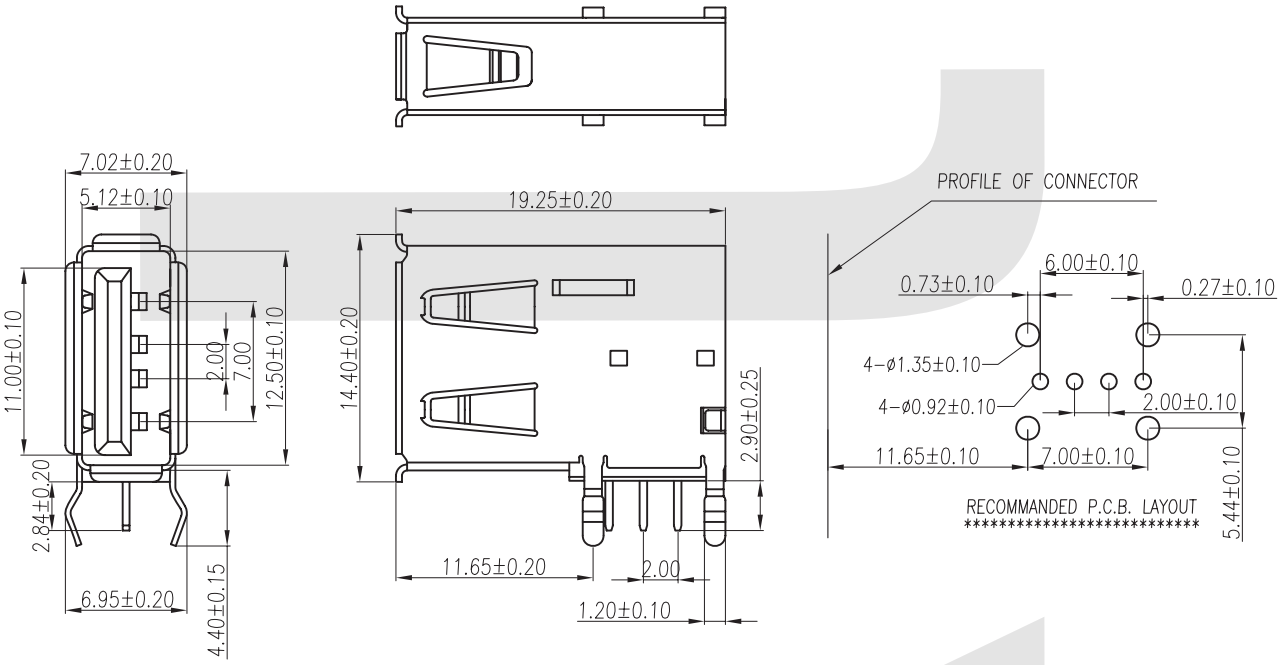

ORDER INFORMATION

Product NO.: KLS1 - 191-4P - B

Pos. NO.
USB-AF TYPE

Color: W=WHITE
B=BLACK

IEEE 1394 Series

KLS1-1394-4FB IEEE 1394 4 Pin Receptacle SMT Type

Material:
Housing: Thermoplastic, UL94V-0
Contact: Copper Alloy
Shell: Copper Alloy
Pin Plated: Gold 3u" over 50u" nickel

Electrical Characteristics:
Voltage Current Rating: 1.5AMP.40V AC
Insulation Resistnce: 500MΩ Min
Contact Resistance: 50mΩ Max
Dielectric Withstanding Voltage: 500V AC
Temperature Range: -20°C ~+85°C



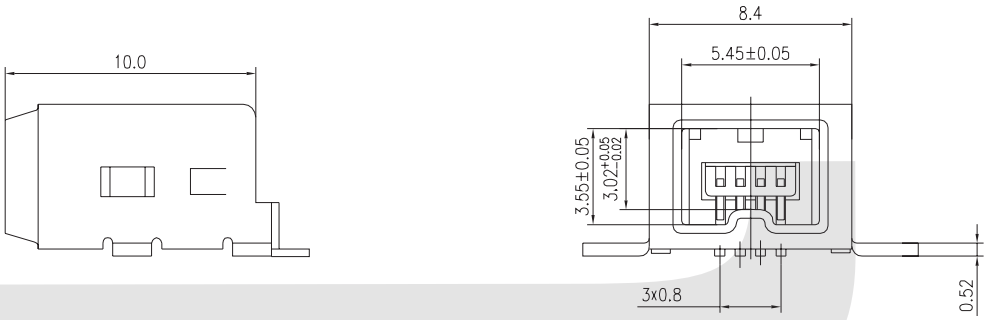

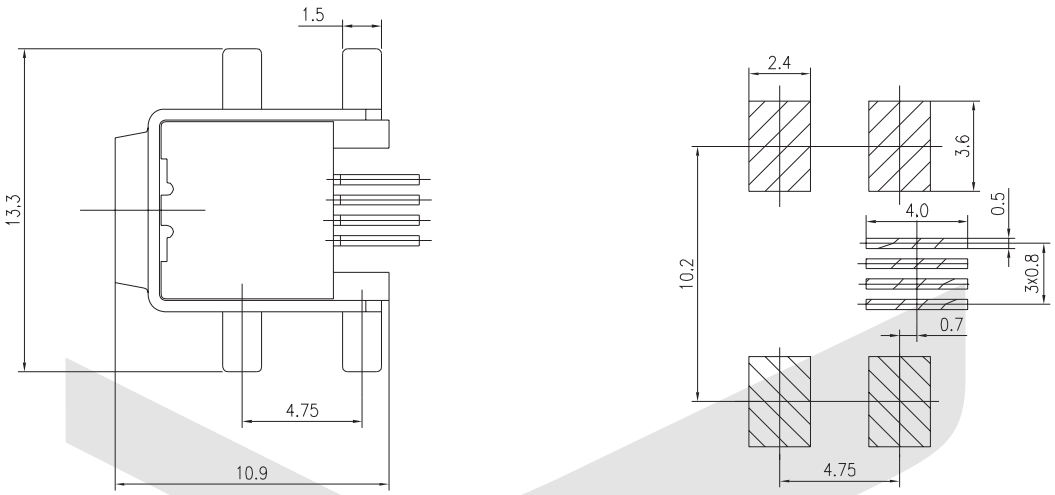

ORDER INFORMATION

Product NO.: KLS1 - 1394-4FB-B

Pos. NO.
IEEE 1394 TYPE
Color: W=WHITE B=BLACK

IEEE 1394 Series

KLS1-1394-4FC IEEE 1394 4 Pin Receptacle DIP90 °

Material:
Housing: Thermoplastic, UL94V-0
Contact: Copper Alloy
Shell: Copper Alloy
Pin Plated: Gold 3u" over 50u" nickel

Electrical Characteristics:
Voltage Current Rating: 1.5AMP.40V AC
Insulation Resistnce: 500MΩ Min
Contact Resistance: 50mΩ Max
Dielectric Withstanding Voltage: 500V AC
Temperature Range: -20°C ~+85°C



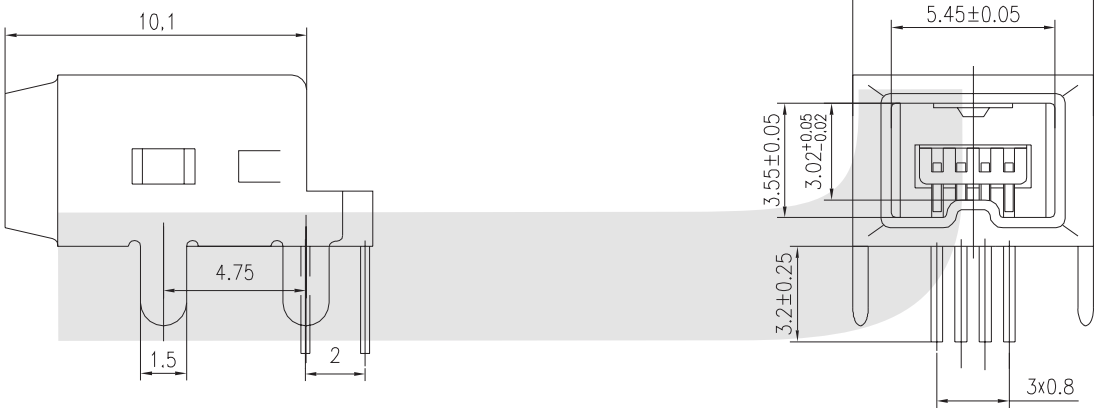

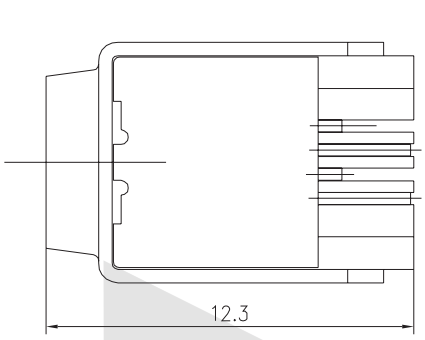

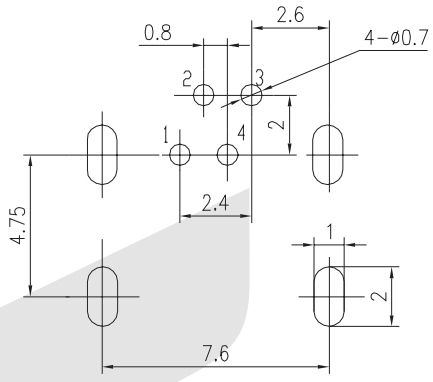

ORDER INFORMATION

Product NO.: KLS1 - 1394-4FC-B

Pos. NO.
IEEE 1394 TYPE
Color:W=WHITE B=BLACK

IEEE 1394 Series

KLS1-1394-4FD IEEE 1394 4 Pin Receptacle Solder For Cable Ass'Y

Material:
Housing: Thermoplastic, UL94V-0
Contact: Copper Alloy
Shell: Copper Alloy
Pin Plated: Gold 3u" over 50u" nickel

Electrical Characteristics:
Voltage Current Rating: 1.5AMP.40V AC
Insulation Resistnce: 500MΩ Min
Contact Resistance: 50mΩ Max
Dielectric Withstanding Voltage: 500V AC
Temperature Range: -20°C ~+85°C



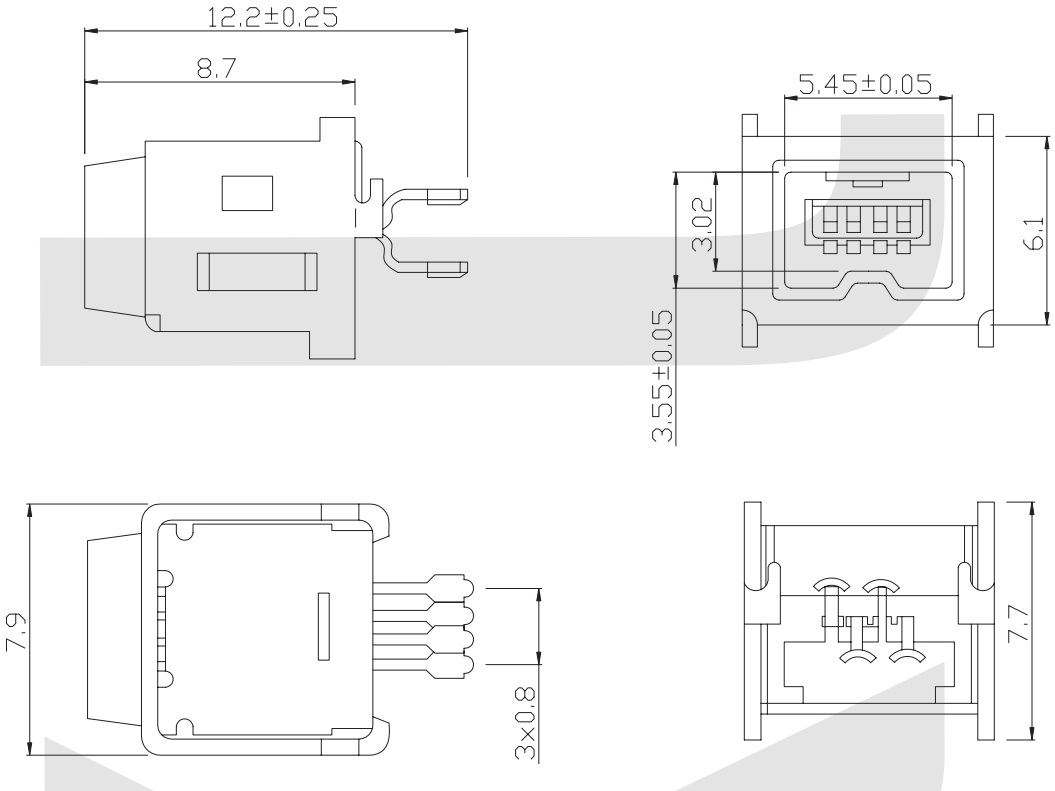

ORDER INFORMATION

Product NO.: KLS1 - 1394-4FD-B

Pos. NO.
IEEE 1394 TYPE
Color:W=WHITE B=BLACK

IEEE 1394 Series

KLS1-1394-4FE IEEE 1394 4 Pin Plug Solder For Cable Ass'Y(2)

Material:

Housing: Thermoplastic, UL94V-0
Contact: Copper Alloy
Shell: Copper Alloy
Pin Plated: Gold 3u" over 50u" nickel

Electrical Characteristics:

Voltage Current Rating: 1.5AMP.40V AC
Insulation Resistnce: 500MΩ Min
Contact Resistance: 50mΩ Max
Dielectric Withstanding Voltage: 500V AC
Temperature Range: -20°C ~+85°C



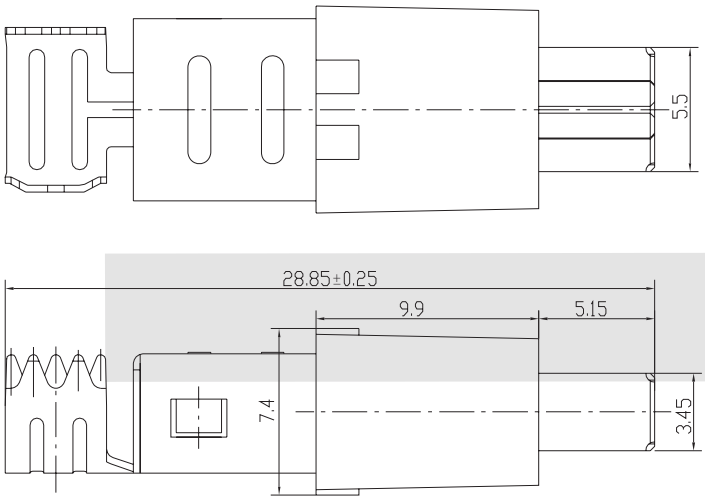

NO.	P/N	QTY	MATERIAL
6	General insert	1	PBT
5	General pin	4	QSn6.5-0.1
4	General insert back cover	1	PBT
3	General out jacket	1	PVC
2	General Up base	1	H65Y
1	General down base	1	H65Y



ORDER INFORMATION

Product NO.: KLS1 - 1394-4FE-B

Pos. NO.
IEEE 1394 TYPE
Color:W=WHITE B=BLACK

IEEE 1394 Series

KLS1-1394-6FA IEEE 1394 6 Pin Receptacle DIP90° Upright

Material:
Housing: Thermoplastic, UL94V-0
Contact: Copper Alloy
Shell: Copper Alloy
Pin Plated: Gold 3u" over 50u" nickel

Electrical Characteristics:
Voltage Current Rating: 1.5AMP.40V AC
Insulation Resistnce: 500MΩ Min
Contact Resistance: 50mΩ Max
Dielectric Withstanding Voltage: 500V AC
Temperature Range: -20°C ~+85°C



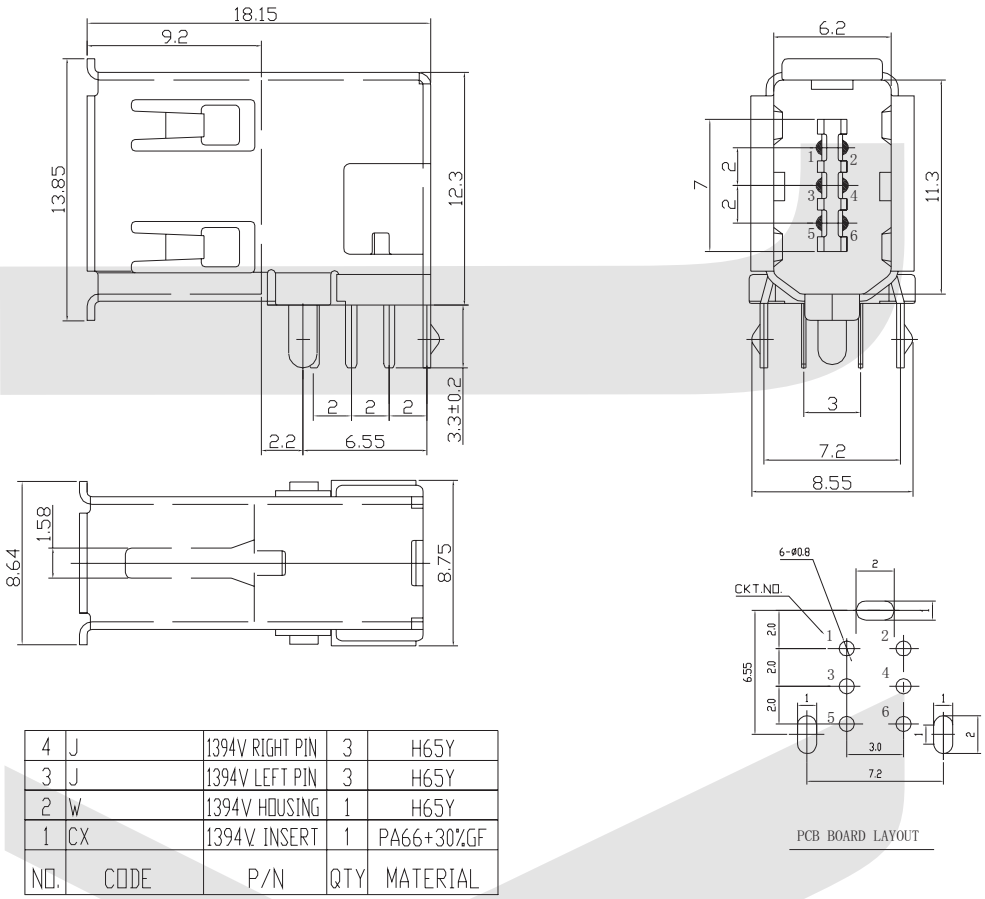

NO.	CODE	P/N	QTY	MATERIAL
4	J	1394V RIGHT PIN	3	H65Y
3	J	1394V LEFT PIN	3	H65Y
2	W	1394V HOUSING	1	H65Y
1	CX	1394V INSERT	1	PA66+30%GF

ORDER INFORMATION

Product NO.: KLS1 -1394-6FA-B

Pos. NO.
IEEE 1394 TYPE
Color: W = WHITE B = BLACK

IEEE 1394 Series

KLS1-1394-6FB IEEE 1394 6 Pin Receptacle SMT Type

Material:

Housing: Thermoplastic, UL94V-0
Contact: Copper Alloy
Shell: Copper Alloy
Pin Plated: Gold 3u" over 50u" nickel

Electrical Characteristics:

Voltage Current Rating: 1.5AMP.40V AC
Insulation Resistnce: 500MΩ Min
Contact Resistance: 50mΩ Max
Dielectric Withstanding Voltage: 500V AC
Temperature Range: -20°C ~+85°C



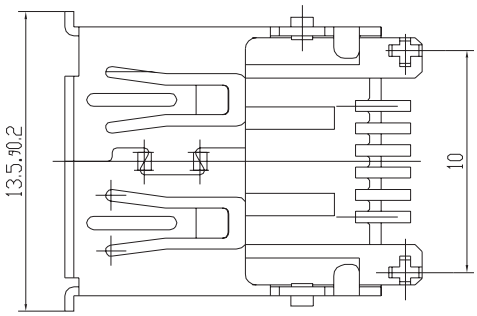

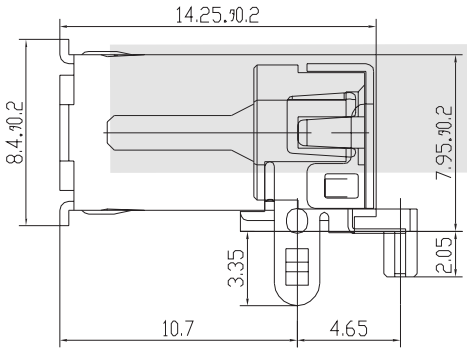

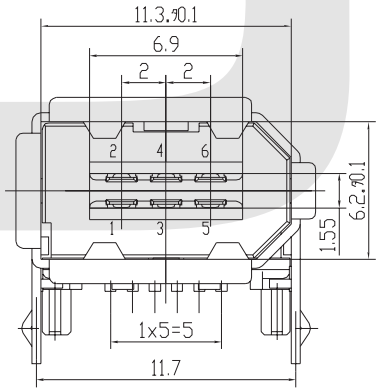

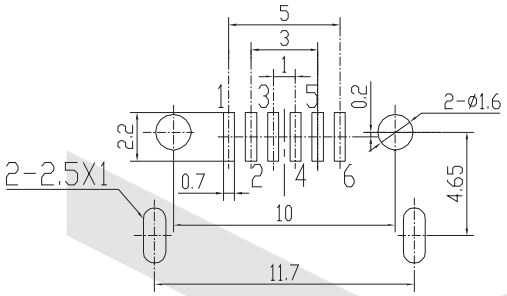

NO.	CODE	P/N	QTY	MATERIAL
5	G	1394P.JH BACK COVER	1	08F
4	W	1394P.JH SHIELD	1	H65Y
3	J	1394H BACK FRONT	3	H65Y
2	J	1394H FRONT PIN	3	H65Y
1	X	1394H INSERT	1	PA66+30%GF

ORDER INFORMATION

Product NO.: KLS1 - 1394-6FB-B

Pos. NO.
IEEE 1394 TYPE
Color: W=WHITE B=BLACK

IEEE 1394 Series

KLS1-1394-6FC IEEE 1394 6 Pin Receptacle DIP90° Type

Material:
Housing: Thermoplastic, UL94V-0
Contact: Copper Alloy
Shell: Copper Alloy
Pin Plated: Gold 3u" over 50u" nickel

Electrical Characteristics:
Voltage Current Rating: 1.5AMP.40V AC
Insulation Resistnce: 500MΩ Min
Contact Resistance: 50mΩ Max
Dielectric Withstanding Voltage: 500V AC
Temperature Range: -20°C ~+85°C



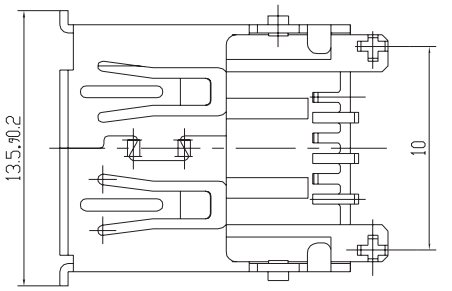

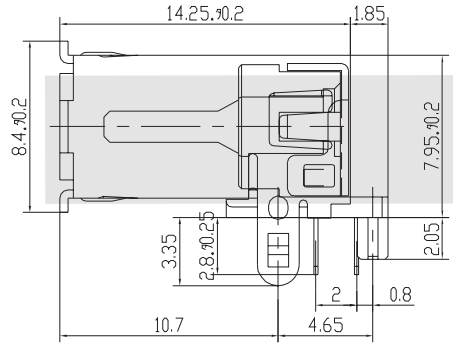

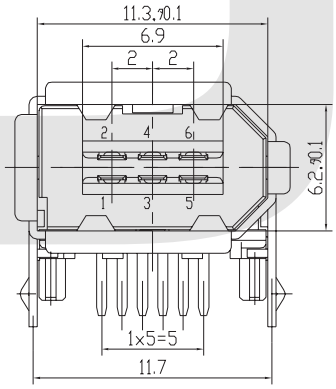

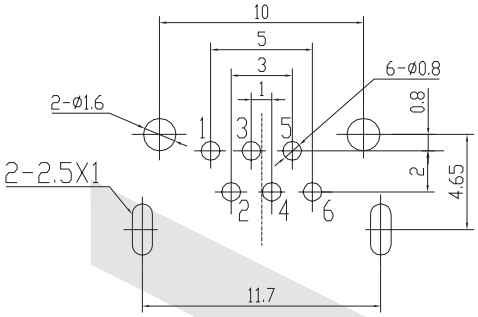

5	G	1394P.IH Back Cover	1	Steel
4	W	1394P Shell	1	Copper Alloy
3	J	1394P PIN	3	Copper Alloy
2	J	1394P Foront PIN	3	Copper Alloy
1	X	1394P INSERT	1	PA66+30%GF
NO.	CODE	P/N	QTY	MATERIAL

ORDER INFORMATION

Product NO.: KLS1 - 1394-6FC-B

Pos. NO.
IEEE 1394 TYPE
Color: W=WHITE B=BLACK

IEEE 1394 Series

KLS1-1394-6FD IEEE 1394 6 Pin Plug Solder For Cable Ass'Y

Material:

Housing: Thermoplastic, UL94V-0
Contact: Copper Alloy
Shell: Copper Alloy
Pin Plated: Gold 3u" over 50u" nickel

Electrical Characteristics:

Voltage Current Rating: 1.5AMP.40V AC
Insulation Resistnce: 500MΩ Min
Contact Resistance: 50mΩ Max
Dielectric Withstanding Voltage: 500V AC
Temperature Range: -20°C ~+85°C



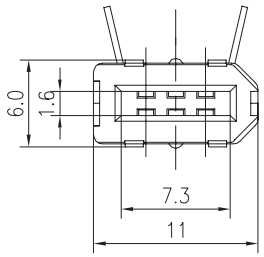

NO.	P/N	QTY	Material
1	UP Shield	1	H65Y
2	insert	1	PBT
3	Terminal	6	Qsn6. 5-0. 1
4	Doen Shield	1	H65Y

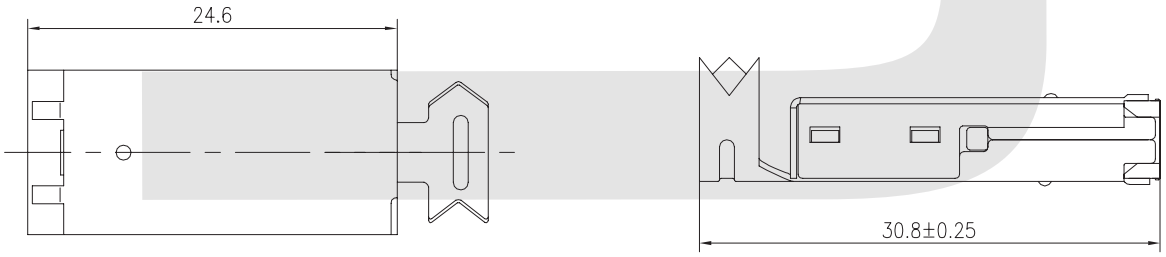



ORDER INFORMATION

Product NO.: KLS1 - 1394-6FD-B

Pos. NO.
IEEE 1394 TYPE
Color:W=WHITE B=BLACK

IEEE 1394 Series

KLS1-1394-9FB IEEE 1394 9 Pin Receptacle SMT Type

Material:
Housing: Thermoplastic, UL94V-0
Contact: Copper Alloy
Shell: Copper Alloy
Pin Plated: Gold 3u" over 50u" nickel

Electrical Characteristics:
Voltage Current Rating: 1.5AMP.40V AC
Insulation Resistnce: 500MΩ Min
Contact Resistance: 50mΩ Max
Dielectric Withstanding Voltage: 500V AC
Temperature Range: -20°C ~+85°C

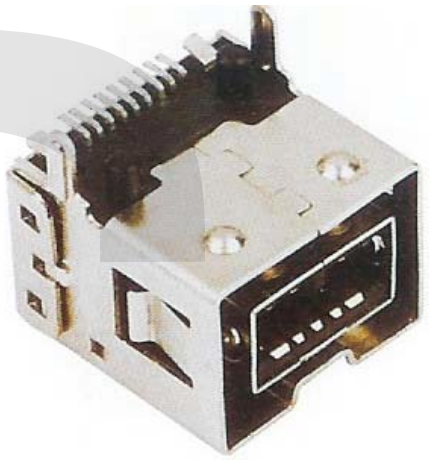

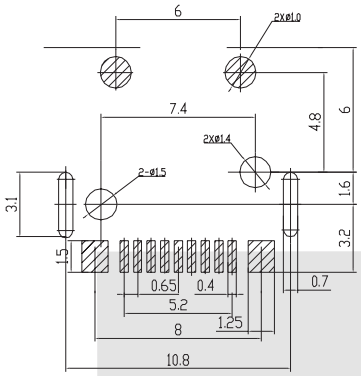

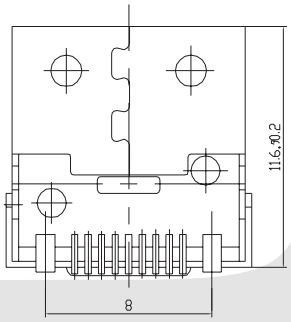

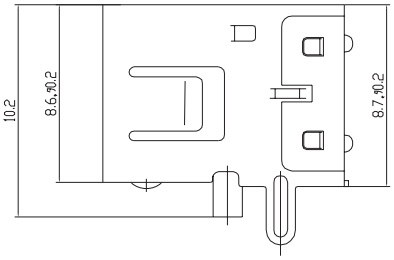

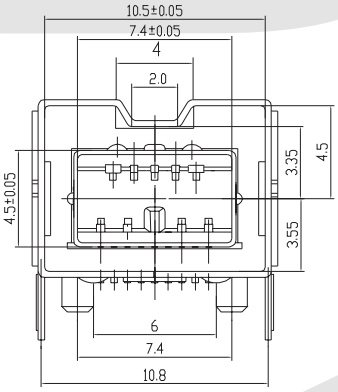

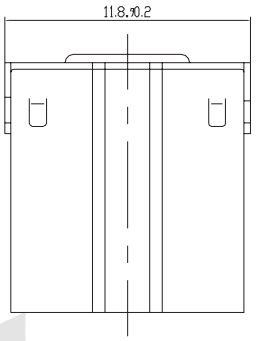

ORDER INFORMATION

Product NO.: KLS1 - 1394-9FB-B

Pos. NO.
IEEE 1394 TYPE
Color:W=WHITE B=BLACK

HDMI Connector Series

KLS1-282 HDMI 19PIN Male Solder Type

MATERIAL

Housing : LCP, UL 94V-0, Black
Cover: LCP, UL 94V-0
Terminal: Phosphor Bronze
Shell: Brass/SPCC
Contact Finish : 30u" Gold On Mating End, Tin On Termination End,
With Entire Contact Nickel Underplated.
Shell-Copper Alloy, Nickel Plated



ELECTRICAL

Current Rating : 0.5A
Dielectric Withstanding Voltage : 40V AC Per Minute
Insulation Resistance : 100MΩ MIN
Contact Resistance : 30MΩ MAX
Operating Temperature: -25°C ~ +85°C

MECHANICAL

Insertion Force: 44.1 N Max.
Withdraw Force: 9.8 N Min.

Feature

1. HDMI is the first industry-supported, uncompressed, all-digital audio/video interface.
2. HDMI provides an interface between any audio/video source.
3. HDMI supports standard, enhanced, or high-definition video, plus multi-channel digital audio on a single cable.
4. It transmits all ATSC HDTV standards and supports 8-channel digital audio, with bandwidth to spare to accommodate future enhancements and requirements.
5. HDMI is full backward-compatible with DVI that handles digital transfers at rates up to 5 Gbps !

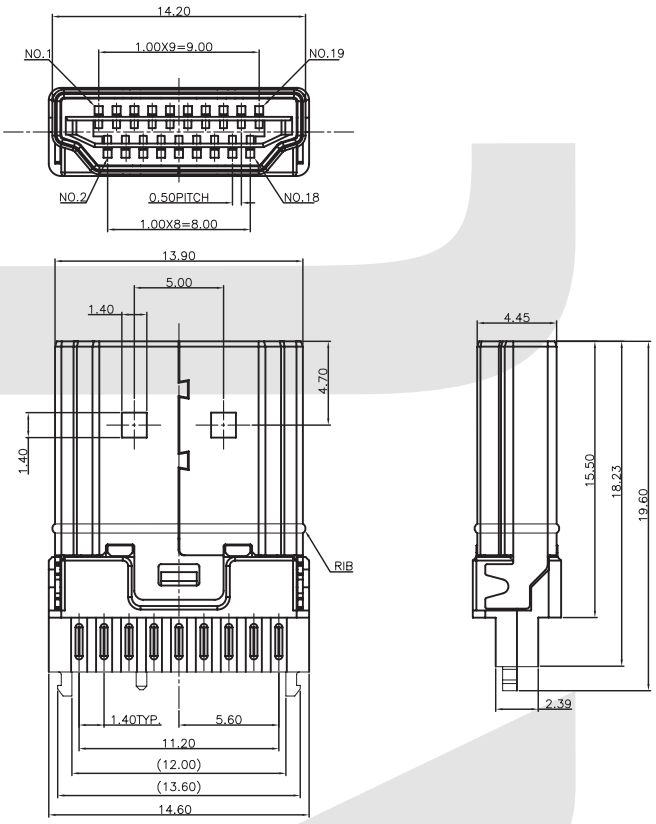

ORDER INFORMATION

Product NO.: KLS1 - 281 - 19 - 1 1 X X W

Pos. NO.
Product Kind
Pin Number
Type:1=Male 2= Female
Shell Material: 1=Brass
2=SPCC
Color: W=WHITE
B=BLACK
Terminal Plate: 1 = 1U" 3 = 3U" 5 = 5U"
10 = 10U" 15 = 15U" 30 = 30U"
Shell Plate: N=Nickel 1=1U" 3=3U"

HDMI Connector Series

KLS1-282 HDMI 19PIN SMT WITH FLANGE Series

MATERIAL

Insulator : LCP, UL 94V-0, Black
Contact: Copper Alloy
Contact Finish : 30u" Gold On Mating End, Tin On Termination End,
With Entire Contact Nickel Underplated.
Shell-Copper Alloy, Nickel Plated

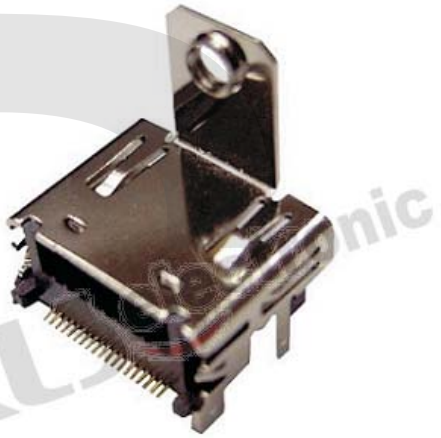

ELECTRICAL

Current Rating : 0.5A
Dielectric Withstanding Voltage : 40V AC Per Minute
Insulation Resistance : 100MΩ MIN
Contact Resistance : 30MΩ MAX
Operating Temperature : -20°C ~ +85°C

MECHANICAL

Insertion Force: 44.1 N Max.
Withdraw Force: 9.8 N Min.

Feature

1. HDMI is the first industry-supported, uncompressed, all-digital audio/video interface.
2. HDMI provides an interface between any audio/video source.
3. HDMI supports standard, enhanced, or high-definition video, plus multi-channel digital audio on a single cable.
4. It transmits all ATSC HDTV standards and supports 8-channel digital audio, with bandwidth to spare to accommodate future enhancements and requirements.
5. HDMI is full backward-compatible with DVI that handles digital transfers at rates up to 5 Gbps !

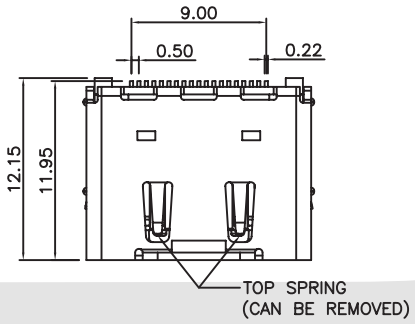

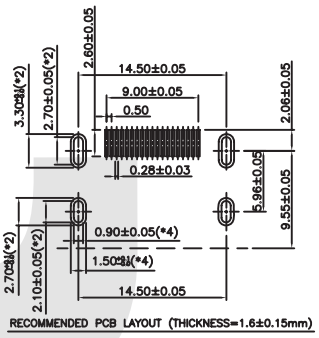

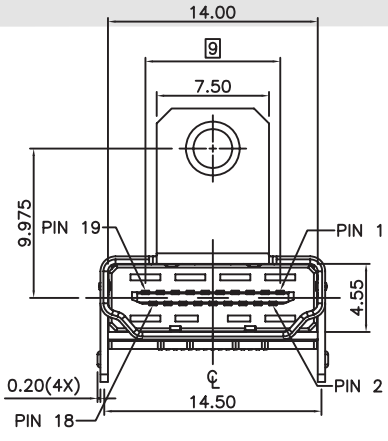

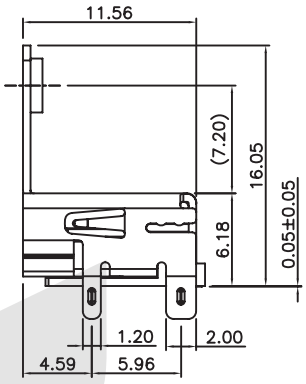

ORDER INFORMATION

Product NO.: KLS1 - 282 - 19 - 2 1 X X W

- Pos. NO.
- Product Kind
- Pin Number
- Type: 1=Male 2= Female
- Shell Material: 1=copper Alloy 2=Zinc Alloy
- Color: W=WHITE B=BLACK
- Terminal Plate: 1 = 1U" 3 = 3U" 5 = 5U" 10 = 10U" 15 = 15U" 30 = 30U"
- Shell Plate: N=Nickel 1=1U" 3=3U"

HDMI Connector Series

KLS1-283 HDMI Female Vertical SMT 3Posts,With Ear

MATERIAL

Housing : LCP, UL 94V-0, Black
Cover: LCP, UL 94V-0
Terminal: Phosphor Bronze
Shell: Brass/SPCC
Contact Finish : 30u" Gold On Mating End, Tin On Termination End,
With Entire Contact Nickel Underplated.
Shell-Copper Alloy, Nickel Plated

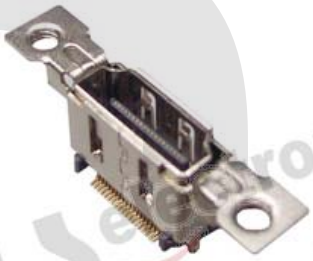

ELECTRICAL

Current Rating : 0.5A
Dielectric Withstanding Voltage : 40V AC Per Minute
Insulation Resistance : 100MΩ MIN
Contact Resistance : 30MΩ MAX
Operating Temperature: -25ºC ~ +85ºC

MECHANICAL

Insertion Force: 44.1 N Max.
Withdraw Force: 9.8 N Min.

Feature

1.HDMI is the first industry-supported, uncompressed, all-digital audio/video interface.
2.HDMI provides an interface between any audio/video source.
3.HDMI supports standard, enhanced, or high-definition video, plus multi-channel digital audio on a single cable.
4.It transmits all ATSC HDTV standards and supports 8-channel digital audio, with bandwidth to spare to accommodate future enhancements and requirements.
5.HDMI is full backward-compatible with DVI that handles digital transfers at rates up to 5 Gbps !

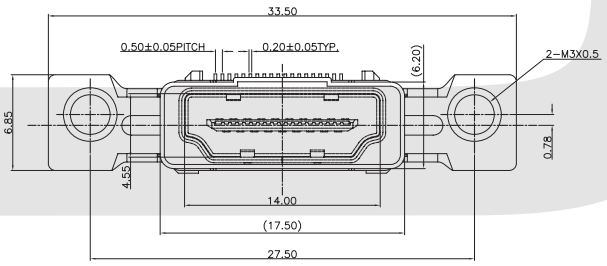

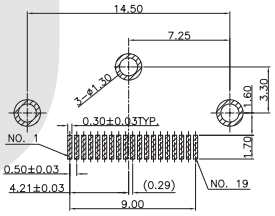

RECOMMENDED PCB LAYOUT

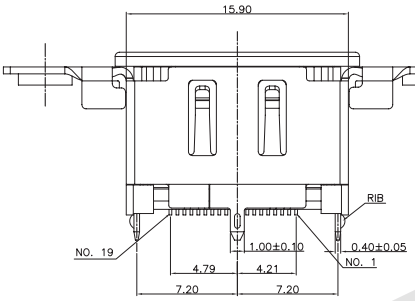

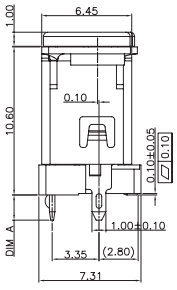

ORDER INFORMATION

Product NO.: KLS1 - 283 - 19 - 2 1 X X A

Pos. NO.
Product Kind
Pin Number
Type:1=Male 2= Female
Shell Material: 1=Brass
2=SPCC
Shell Leg Length Code:
A: DIM A = 1.9mm B: DIM A = 2.4mm
Terminal Plate: 1 = 1U " 3 = 3U" 5 = 5U "
10 = 10U" 15 = 15U " 30 = 30U"
Shell Plate: N=Nickel 1=1U" 3=3U"

D-SUB Series

KLS1-213 D-SUB 2 ROW SOLDER TYPE

Electrical Specification:

Current Rating: 2 AMP
Insulator Resistance: 5000M ohms min. at DC 500V
Contact Resistance: 20m ohms max. at DC 100mA
Operating Temperature: -55ºC~+105ºC

Material:

Housing: 30% Glass filled PBT UL94V-0
Contacts: Phosphor Bronze
Shell: Steel, 100u" Tin Over 50u" min Nickel
Clinch Nut: Brass, 100u" min Nickel Plated
Screwlock: Brass, 100u" min Nickel Plated

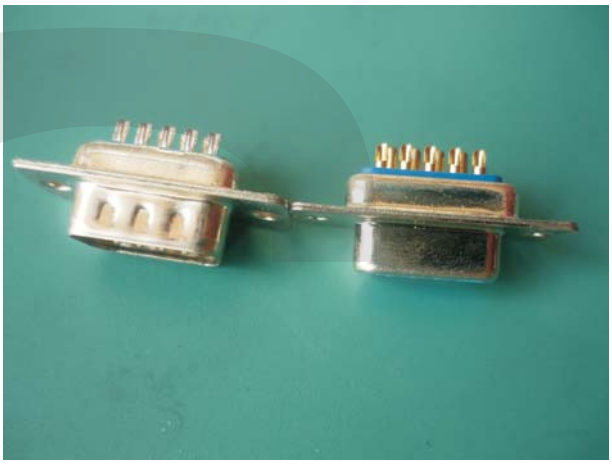

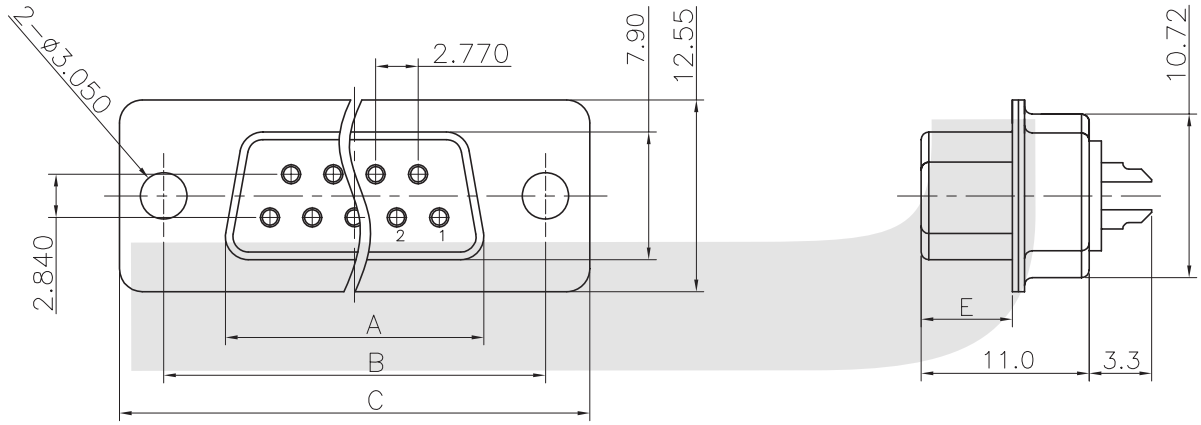

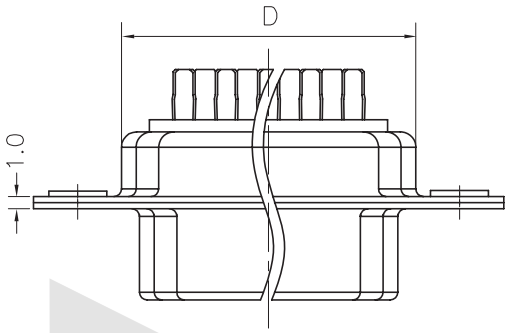

50F	52.34	61.11	66.90	55.30	5.84
37F	54.84	63.50	69.32	57.71	5.84
25F	38.38	47.04	53.04	41.30	5.84
23F	35.18	44.36	50.30	38.15	5.84
19F	29.92	39.03	44.80	33.02	5.84
15F	24.66	33.32	39.14	27.51	5.97
09F	16.33	24.99	30.81	19.28	5.97
PIN NO:	A±0.20	B±0.10	C±0.20	D±0.20	E±0.20

ORDER INFORMATION

Product NO.: KLS1-213-XX - F -L

Pos. NO.
001=001 pos.
Contact Number of Row
213=DB Series
Number of Contacts
L=Blue B=Black W=White
M=Male F=Female

D-SUB Series

KLS1-213 D-SUB 2 ROW SOLDER TYPE

Electrical Specification:

Current Rating: 2 AMP
Insulator Resistance: 5000M ohms min. at DC 500V
Contact Resistance: 20m ohms max. at DC 100mA
Operating Temperature: -55ºC~+105ºC

Material:

Housing: 30% Glass filled PBT UL94V-0
Contacts: Phosphor Bronze
Shell: Steel, 100u" Tin Over 50u" min Nickel
Clinch Nut: Brass, 100u" min Nickel Plated
Screwlock: Brass, 100u" min Nickel Plated

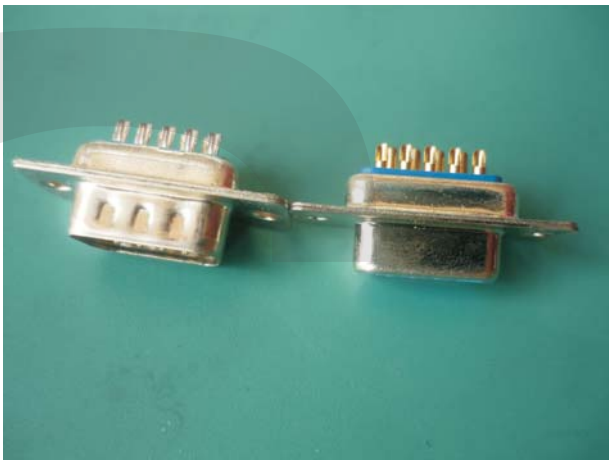

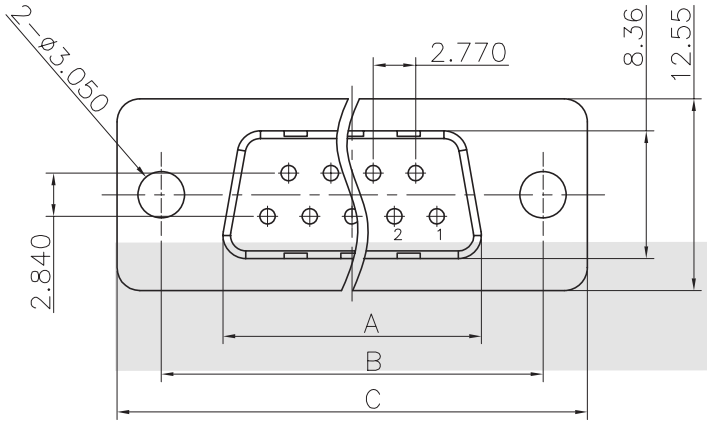

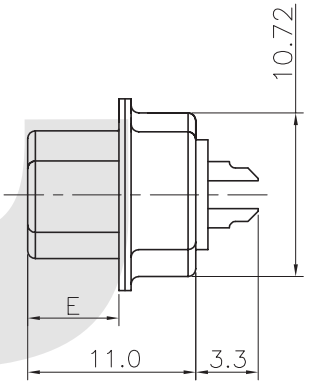

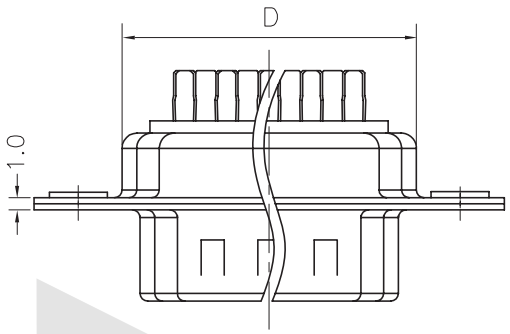

50M	52.86	61.11	66.90	55.30	5.84
37M	55.42	63.50	69.32	57.71	5.84
25M	38.96	47.04	53.04	41.30	5.84
23M	38.50	44.36	50.30	38.15	5.84
19M	32.90	39.03	44.80	33.02	5.84
15M	25.25	33.32	39.14	27.51	5.97
09M	16.92	24.99	30.81	19.28	5.97
PIN NO:	A±0.20	B±0.10	C±0.20	D±0.20	E±0.20

ORDER INFORMATION

Product NO.: KLS1-213-XX - M -L

Pos. NO.
001=001 pos.
Contact Number of Row
213=DB Series
Number of Contacts
L=Blue B=Black W=White
M=Male F=Female

D-SUB Series

I

KLS1-214 D-SUB 3 ROW H.D. SOLDER TYPE

Electrical Specification:
Current Rating: 2 AMP
Insulator Resistance: 5000M ohms min. at DC 500V
Contact Resistance: 20m ohms max. at DC 100mA
Operating Temperature: -55ºC~+105ºC

Material:
Housing: 30% Glass filled PBT UL94V-0
Contacts: Phosphor Bronze
Shell: Steel, 100u" Tin Over 50u" min Nickel
Clinch Nut: Brass, 100u" min Nickel Plated
Screwlock: Brass, 100u" min Nickel Plated

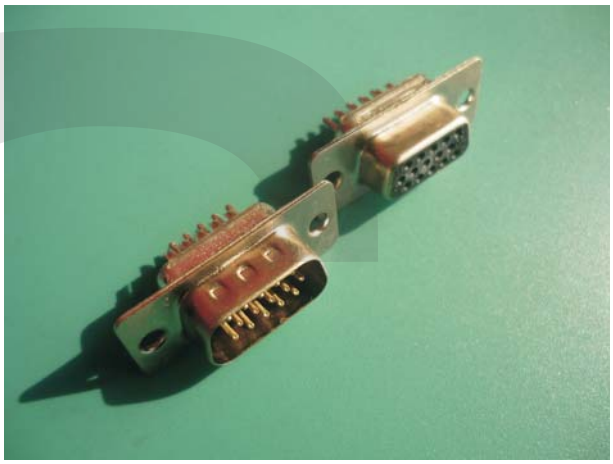

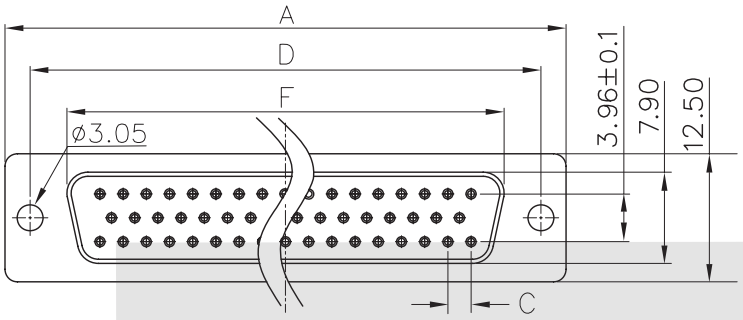

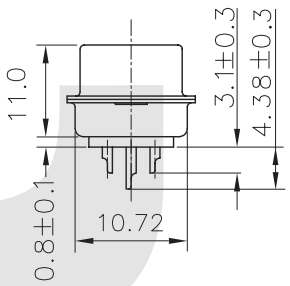

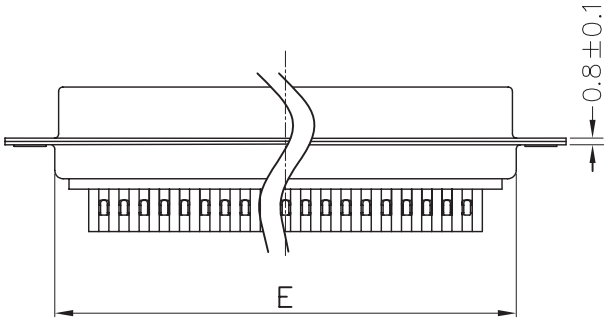

78	66.90	2.41	61.11	55.30	52.34
62	69.30	2.41	63.50	57.70	54.80
44	53.00	2.29	47.04	41.30	38.40
26	39.10	2.29	33.32	27.50	24.70
15	30.00	2.29	24.99	19.30	16.30
PIN NO:	A±0.30	C±0.10	D±0.20	E±0.20	F±0.20

ORDER INFORMATION

Product NO.: KLS1-214-XX -F -L

- Pos. NO. 001=001 pos.
- Contact Number of Row 214=HDB Series
- Number of Contacts
- M=Male F=Female
- L=Blue B=Black

D-SUB Series

KLS1-214 D-SUB 3 ROW H.D. SOLDER TYPE

Electrical Specification:
Current Rating: 2 AMP
Insulator Resistance: 5000M ohms min. at DC 500V
Contact Resistance: 20m ohms max. at DC 100mA
Operating Temperature: -55ºC~+105ºC

Material:
Housing: 30% Glass filled PBT UL94V-0
Contacts: Phosphor Bronze
Shell: Steel, 100u" Tin Over 50u" min Nickel
Clinch Nut: Brass, 100u" min Nickel Plated
Screwlock: Brass, 100u" min Nickel Plated

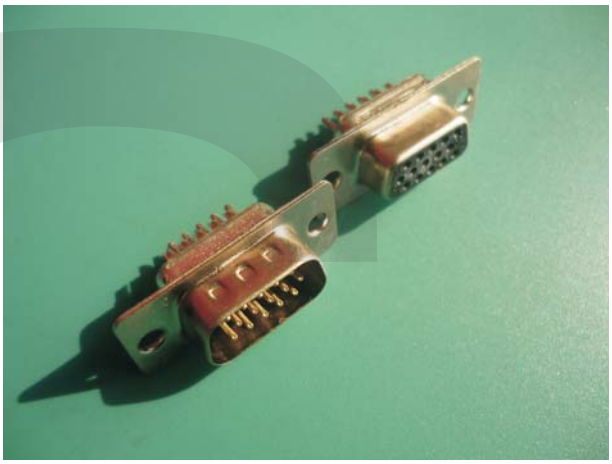

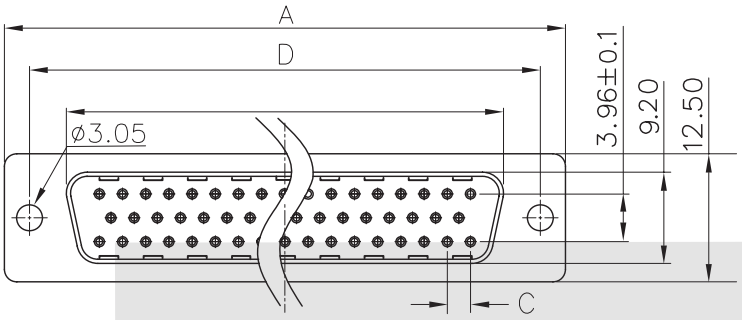

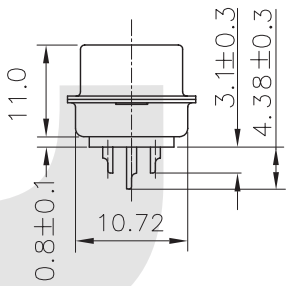

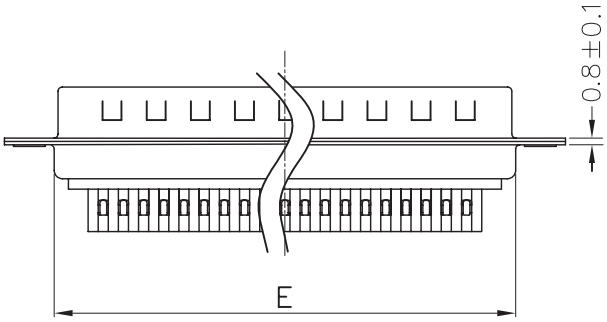

78	66.90	52.86	2.41	61.11	55.30
62	69.30	55.40	2.41	63.50	57.70
44	53.00	39.00	2.29	47.04	41.30
26	39.10	25.30	2.29	33.32	27.50
15	30.00	17.90	2.29	24.99	19.30
PIN NO:	A±0.30	B±0.20	C±0.10	D±0.20	E±0.20

ORDER INFORMATION

Product NO.: KLS1-214-XX -M -L

Pos. NO.
001=001 pos.
Contact Number of Row
214=HDB Series
Number of Contacts
L=Blue B=Black
M=Male F=Female

D-SUB Series

KLS1-215 D-SUB 2 ROW SOLDER RIGHT ANGLE 8.1 TYPE

Electrical Specification:
Current Rating: 2 AMP
Insulator Resistance: 5000M ohms min. at DC 500V
Contact Resistance: 20m ohms max. at DC 100mA
Operating Temperature: -55ºC~+105ºC

Material:
Housing: 30% Glass filled PBT UL94V-0
Contacts: Phosphor Bronze
Shell: Steel, 100u" Tin Over 50u" min Nickel
Clinch Nut: Brass, 100u" min Nickel Plated
Screwlock: Brass, 100u" min Nickel Plated

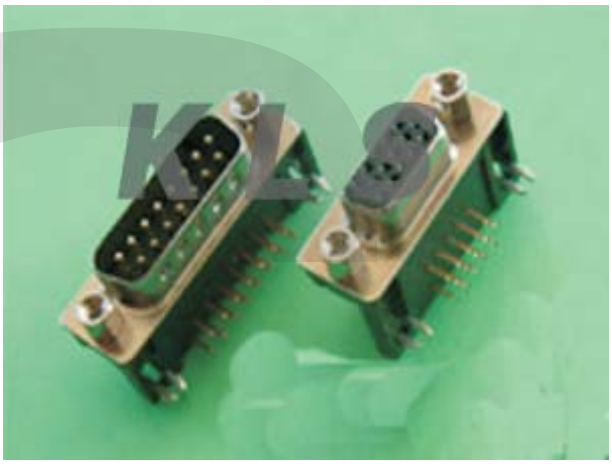

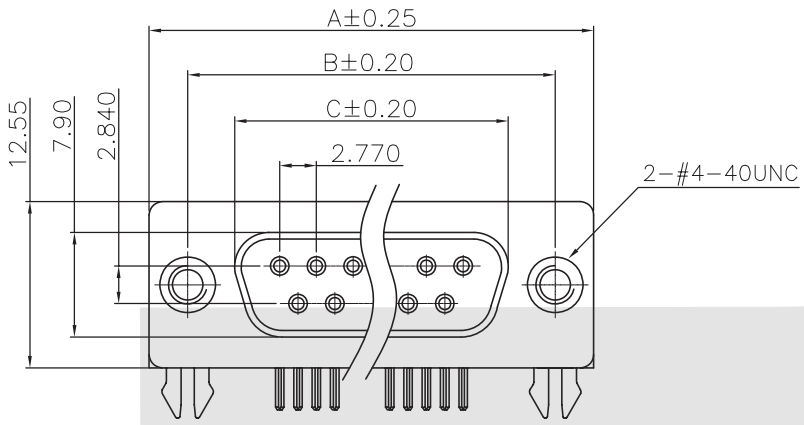

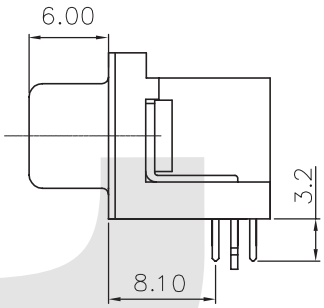

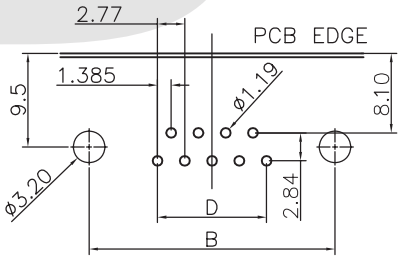

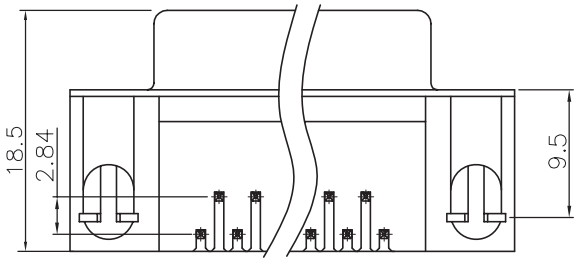

SHELL SIZE	Dim A±0.38	Dim B±0.25	Dim C±0.20
09 pin	30.80	24.99	16.33
15 pin	39.10	33.32	24.66
25 pin	53.00	47.04	38.38
37 pin	69.32	63.50	54.84

ORDER INFORMATION

Product NO.: KLS1-215-XX -F -L

Pos. NO.
001=001 pos.
Contact Number of Row
215=DR Series
Number of Contacts
L=Blue B=Black
M=Male F=Female

D-SUB Series

KLS1-215 D-SUB 2 ROW SOLDER RIGHT ANGLE 8.1 TYPE

Electrical Specification:
Current Rating: 2 AMP
Insulator Resistance: 5000M ohms min. at DC 500V
Contact Resistance: 20m ohms max. at DC 100mA
Operating Temperature: -55ºC~+105ºC

Material:
Housing: 30% Glass filled PBT UL94V-0
Contacts: Phosphor Bronze
Shell: Steel, 100u" Tin Over 50u" min Nickel
Clinch Nut: Brass, 100u" min Nickel Plated
Screwlock: Brass, 100u" min Nickel Plated

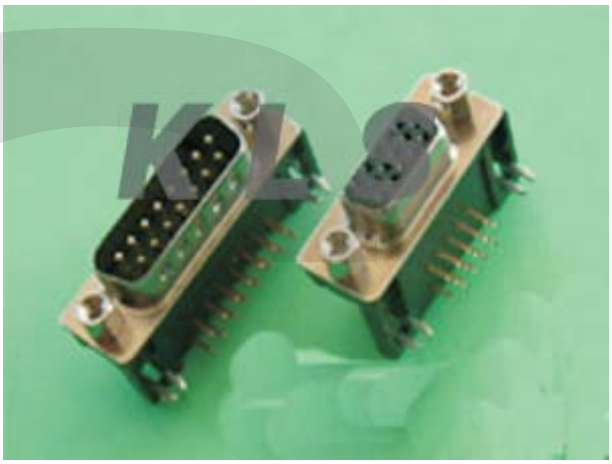

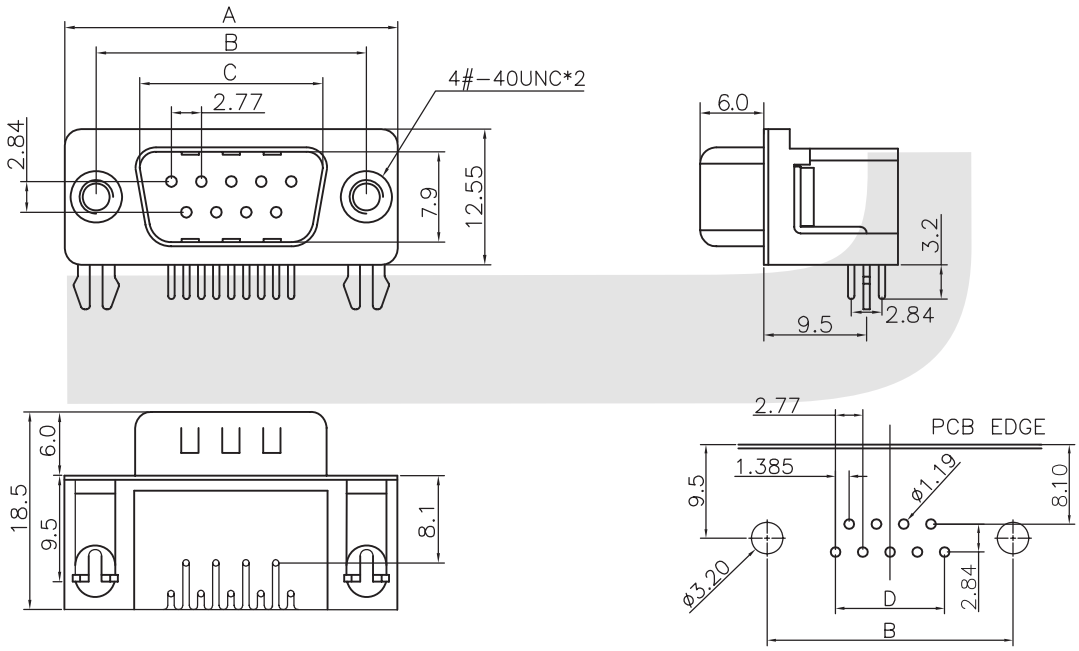

SHELL SIZE	Dim A±0.20	Dim B±0.25	Dim C±0.38	Dim D
09 pin	30.80	24.99	16.92	11.08
15 pin	39.10	33.32	25.25	19.39
25 pin	53.00	47.04	38.96	33.24
37 pin	69.32	63.50	55.42	49.86

ORDER INFORMATION

Product NO.: KLS1-215-XX -M -L

Pos. NO.
001=001 pos.
Contact Number of Row
215=DR Series
Number of Contacts
L=Blue B=Black
M=Male F=Female

D-SUB Series

KLS1-315 D-SUB 3 ROW H.D. RIGHT ANGLE 8.89 TYPE

Electrical Specification:
Current Rating: 2 AMP
Insulator Resistance: 5000M ohms min. at DC 500V
Contact Resistance: 20m ohms max. at DC 100mA
Operating Temperature: -55ºC~+105ºC

Material:
Housing: 30% Glass filled PBT UL94V-0
Contacts: Phosphor Bronze
Shell: Steel, 100u" Tin Over 50u" min Nickel
Clinch Nut: Brass, 100u" min Nickel Plated
Screwlock: Brass, 100u" min Nickel Plated



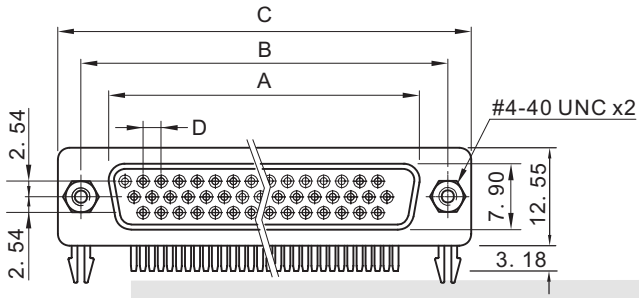

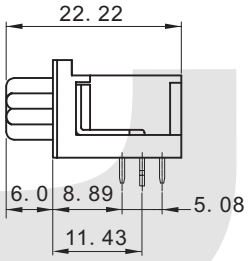

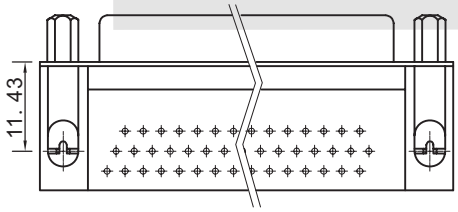

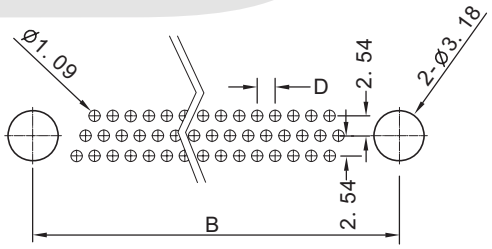

P. C. B. LAYOUT

PIN NO.	A±0. 1	B±0.13	C±0.38	D±0.1
15	16. 33	24. 99	30. 81	2. 29
26	24.66	33. 32	39.14	2. 29
44	38. 38	47. 04	53. 04	2. 29
62	55. 84	63. 50	69. 32	2. 41

ORDER INFORMATION

Product NO.: KLS1-315-XX -F -L

Pos. NO.
001=001 pos.
Contact Number of Row
315=HDR Series
Number of Contacts
L=Blue B=Black
M=Male F=Female

I

D-SUB Series

KLS1-315 D-SUB 3 ROW H.D. RIGHT ANGLE 8.89 TYPE

Electrical Specification:
Current Rating: 2 AMP
Insulator Resistance: 5000M ohms min. at DC 500V
Contact Resistance: 20m ohms max. at DC 100mA
Operating Temperature: -55ºC~+105ºC

Material:
Housing: 30% Glass filled PBT UL94V-0
Contacts: Phosphor Bronze
Shell: Steel, 100u" Tin Over 50u" min Nickel
Clinch Nut: Brass, 100u" min Nickel Plated
Screwlock: Brass, 100u" min Nickel Plated



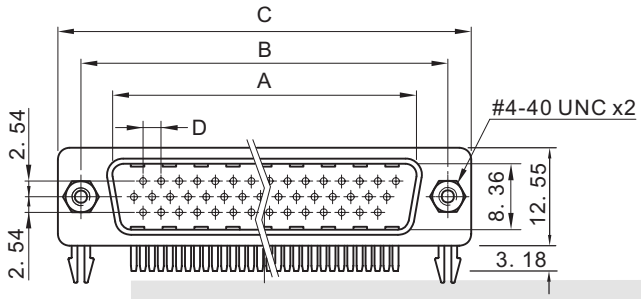

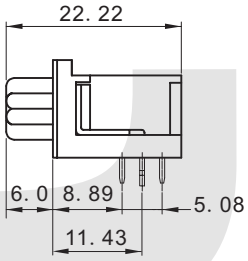

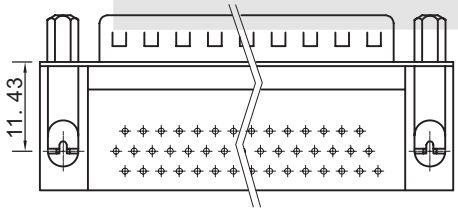

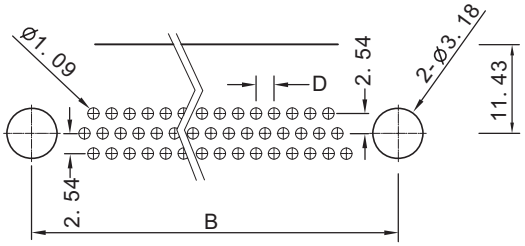

P. C. B. LAYOUT

PIN NO.	A±0. 1	B±0.13	C±0.38	D±0.005
15	16. 92	24. 99	30. 81	2. 29
26	25. 25	33. 32	39.14	2. 29
44	38. 96	47. 04	53. 04	2. 29
62	55. 42	63. 50	69. 32	2. 41

ORDER INFORMATION

Product NO.: KLS1-315-XX -M -L

Pos. NO.
001=001 pos.
Contact Number of Row
315=HDR Series
Number of Contacts
L=Blue B=Black
M=Male F=Female

D-SUB Series

KLS1-515 D-SUB 2 ROW SOLDER RIGHT ANGLE 9.4mm TYPE

Electrical Specification:

Current Rating: 2 AMP
Insulator Resistance: 5000M ohms min. at DC 500V
Contact Resistance: 20m ohms max. at DC 100mA
Operating Temperature: -55°C~+105°C

Material:

Housing: 30% Glass filled PBT UL94V-0
Contacts: Phosphor Bronze
Shell: Steel, 100u" Tin Over 50u" min Nickel
Clinch Nut: Brass, 100u" min Nickel Plated
Screwlock: Brass, 100u" min Nickel Plated



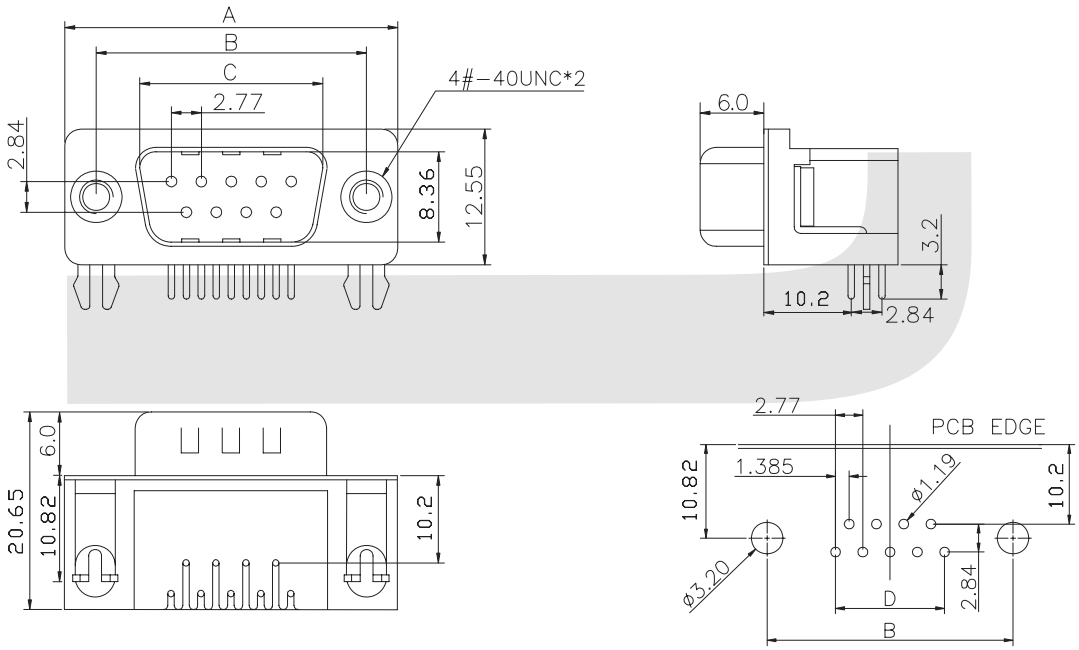

SHELL SIZE	Dim A±0.20	Dim B±0.25	Dim C±0.38	Dim D
09 pin	30.80	24.99	16.92	11.08
15 pin	39.10	33.32	25.25	19.39
25 pin	53.00	47.04	38.96	33.24
37 pin	69.32	63.50	55.42	49.86

ORDER INFORMATION

Product NO.: KLS1-515-XX -M -L

Pos. NO.
001=001 pos.
Contact Number of Row
515=2 Row Solder Right Angle 9.4mm Type
Number of Contacts
L=Blue B=Black
M=Male F=Female

D-SUB Series

KLS1-515 D-SUB 2 ROW SOLDER RIGHT ANGLE 9.4mm TYPE

Electrical Specification:

Current Rating: 2 AMP
Insulator Resistance: 5000M ohms min. at DC 500V
Contact Resistance: 20m ohms max. at DC 100mA
Operating Temperature: -55°C~+105°C

Material:

Housing: 30% Glass filled PBT UL94V-0
Contacts: Phosphor Bronze
Shell: Steel, 100u" Tin Over 50u" min Nickel
Clinch Nut: Brass, 100u" min Nickel Plated
Screwlock: Brass, 100u" min Nickel Plated



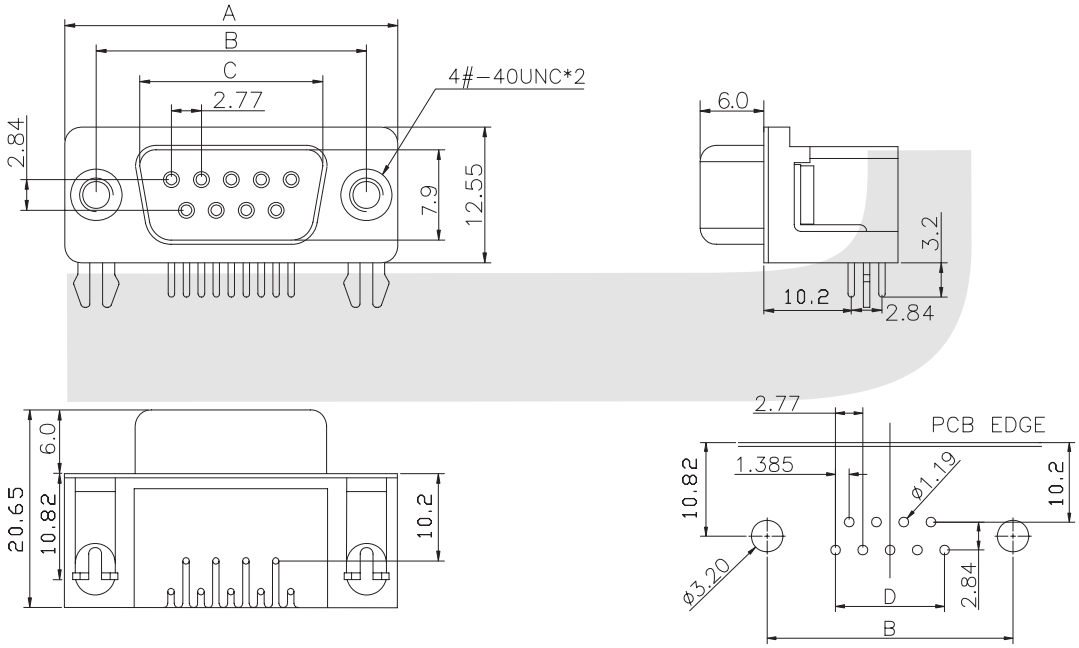

SHELL SIZE	Dim A±0.20	Dim B±0.25	Dim C±0.38	Dim D
09 pin	30.80	24.99	16.92	11.08
15 pin	39.10	33.32	25.25	19.39
25 pin	53.00	47.04	38.96	33.24
37 pin	69.32	63.50	55.42	49.86

ORDER INFORMATION

Product NO.: KLS1-515-XX - F -L

Pos. NO.
001=001 pos.
Contact Number of Row
515=2 Row Solder Right Angle 9.4mm Type
Number of Contacts
L=Blue B=Black
M=Male F=Female

D-SUB Series

KLS1-221 D-SUB 2 ROW SOLDER TYPE

Electrical Specification:

Current Rating: 2 AMP
Insulator Resistance: 5000M ohms min. at DC 500V
Contact Resistance: 20m ohms max. at DC 100mA
Operating Temperature: -55ºC~+105ºC

Material:

Housing: 30% Glass filled PBT UL94V-0
Contacts: Phosphor Bronze
Shell: Steel, 100u" Tin Over 50u" min Nickel
Clinch Nut: Brass, 100u" min Nickel Plated
Screwlock: Brass, 100u" min Nickel Plated

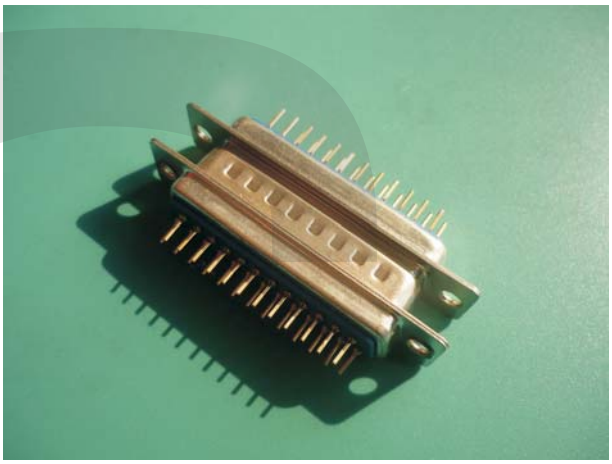

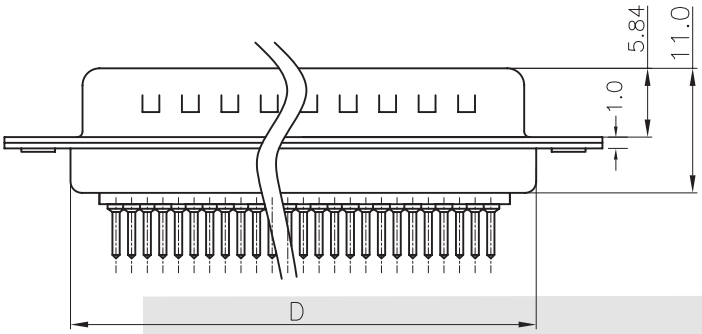

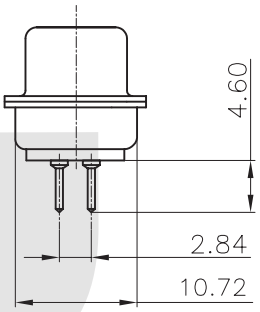

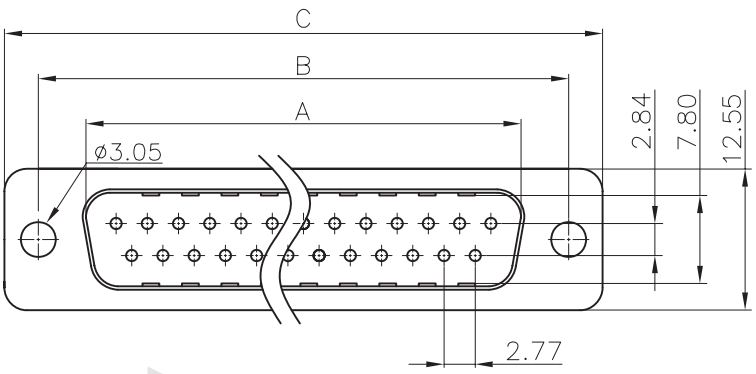

50M	52.86	61.11	66.90	55.30
37M	55.42	63.50	69.32	57.71
25M	38.96	47.04	53.04	41.30
23M	38.50	44.36	50.30	38.15
19M	32.90	39.03	44.80	33.02
15M	25.25	33.32	39.14	27.51
09M	16.92	24.99	30.81	19.28
PIN NO:	A±0.20	B±0.10	C±0.20	D±0.20

ORDER INFORMATION

Product NO.: KLS1-221-XX -M -L

Pos. NO.
001=001 pos.
Contact Number of Row
221=DP Series
Number of Contacts

L=Blue B=Black W=White

M=Male F=Female

D-SUB Series

KLS1-221 D-SUB 2 ROW DIP STRAIGHT TYPE

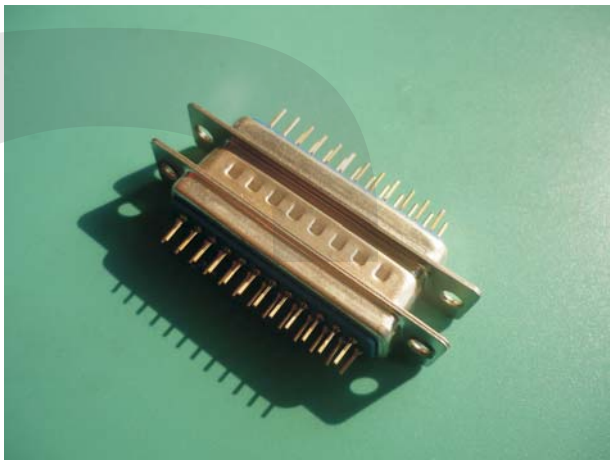

Electrical Specification:

Current Rating: 2 AMP
Insulator Resistance: 5000M ohms min. at DC 500V
Contact Resistance: 20m ohms max. at DC 100mA
Operating Temperature: -55°C~+105°C

Material:

Housing: 30% Glass filled PBT UL94V-0
Contacts: Phosphor Bronze
Shell: Steel, 100u" Tin Over 50u" min Nickel
Clinch Nut: Brass, 100u" min Nickel Plated
Screwlock: Brass, 100u" min Nickel Plated

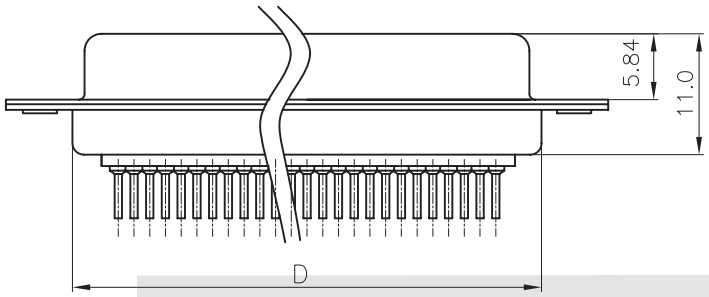

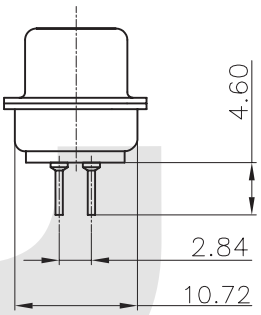

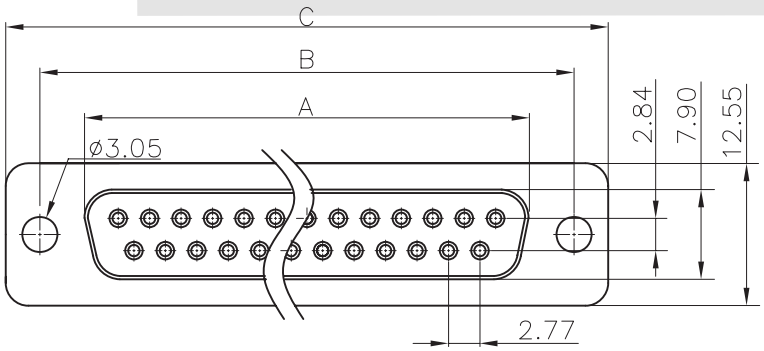

50F	52.34	61.11	66.90	55.30
37F	54.84	63.50	69.32	57.71
25F	38.38	47.04	53.04	41.30
23F	35.18	44.36	50.30	38.15
19F	29.92	39.03	44.80	33.02
15F	24.66	33.32	39.14	27.51
09F	16.33	24.99	30.81	19.28
PIN NO:	A±0.20	B±0.10	C±0.20	D±0.20

ORDER INFORMATION

Product NO.: KLS1-221-XX - F -L

Pos. NO.
001=001 pos.
Contact Number of Row
221=DP Series
Number of Contacts
L=Blue B=Black W=White
M=Male F=Female

D-SUB Series

KLS1-321 D-SUB 3 ROW H.D. DIP STRAIGHT TYPE

Electrical Specification:

Current Rating: 2 AMP
Insulator Resistance: 5000M ohms min. at DC 500V
Contact Resistance: 20m ohms max. at DC 100mA
Operating Temperature: -55°C~+105°C

Material:

Housing: 30% Glass filled PBT UL94V-0
Contacts: Phosphor Bronze
Shell: Steel, 100u" Tin Over 50u" min Nickel
Clinch Nut: Brass, 100u" min Nickel Plated
Screwlock: Brass, 100u" min Nickel Plated



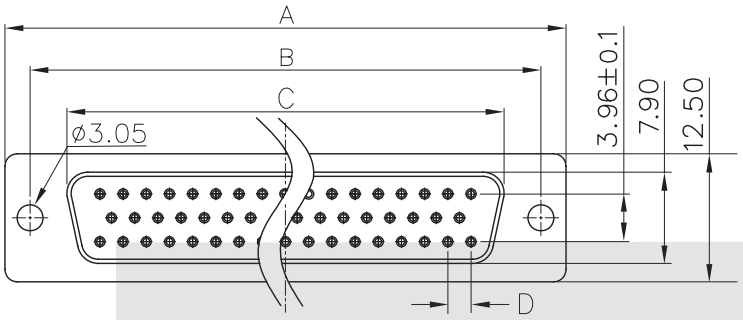

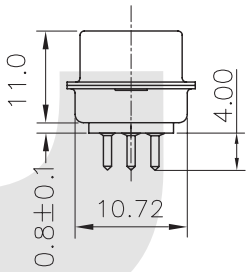

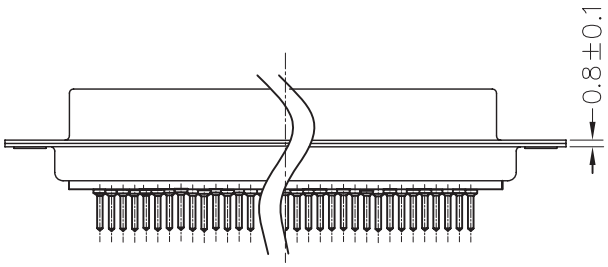

62	69.32	63.50	54.84	2.41
44	53.04	47.04	38.38	2.29
26	39.14	33.32	24.66	2.29
15	30.80	24.99	16.33	2.29
PIN NO:	A±0.30	B±0.20	C±0.10	D±0.20

ORDER INFORMATION

Product NO.: KLS1-321-XX - F -L

Pos. NO.
001=001 pos.
Contact Number of Row
321=HDP Series
Number of Contacts
L=Blue B=Black W=White
M=Male F=Female

D-SUB Series

KLS1-321 D-SUB 3 ROW H.D. DIP STRAIGHT TYPE

Electrical Specification:

Current Rating: 2 AMP
Insulator Resistance: 5000M ohms min. at DC 500V
Contact Resistance: 20m ohms max. at DC 100mA
Operating Temperature: -55ºC~+105ºC

Material:

Housing: 30% Glass filled PBT UL94V-0
Contacts: Phosphor Bronze
Shell: Steel, 100u" Tin Over 50u" min Nickel
Clinch Nut: Brass, 100u" min Nickel Plated
Screwlock: Brass, 100u" min Nickel Plated



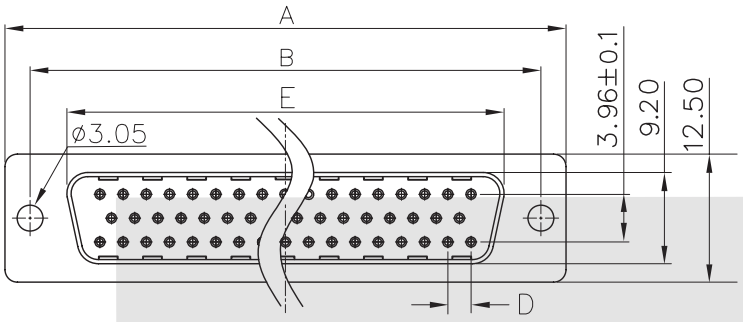

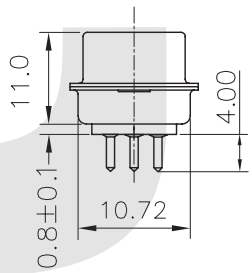

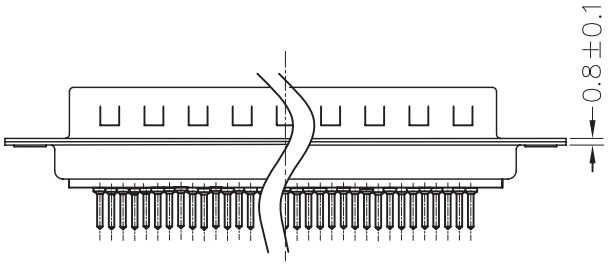

62	69.32	63.50	56.50	2.41
44	53.04	47.04	40.00	2.29
26	39.14	33.32	26.50	2.29
15	30.80	24.99	17.90	2.29
PIN NO:	A±0.30	B±0.20	E±0.10	D±0.20

ORDER INFORMATION

Product NO.: KLS1-321-XX -M -L

Pos. NO.
001=001 pos.
Contact Number of Row
321=HDP Series
Number of Contacts
M=Male F=Female
L=Blue B=Black W=White

I

D-SUB Series

KLS1-222 D-SUB I.D.C TYPE

Electrical Specification:

Current Rating: 2 AMP
Insulator Resistance: 5000M ohms min. at DC 500V
Contact Resistance: 20m ohms max. at DC 100mA
Operating Temperature: -55ºC~+105ºC

Material:

Housing: 30% Glass filled PBT UL94V-0
Contacts: Phosphor Bronze
Shell: Steel, 100u" Tin Over 50u" min Nickel
Clinch Nut: Brass, 100u" min Nickel Plated
Screwlock: Brass, 100u" min Nickel Plated



Male

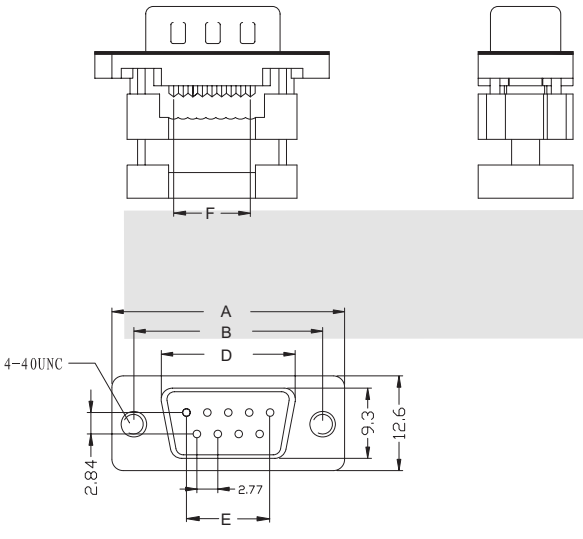

Female

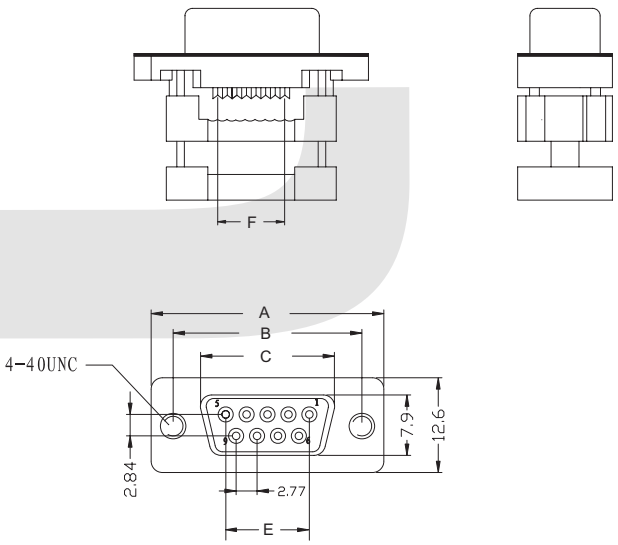

Dimension

Position	A	B	C	D	E	F
09	30.90	25.00	16.90	16.30	11.09	10.16
15	39.20	33.20	25.20	24.60	19.39	17.78
25	53.10	47.00	39.10	39.50	33.24	30.48
37	69.40	63.20	55.40	54.80	49.86	45.72

ORDER INFORMATION

Product NO.: KLS1-222-XX -F -L

Pos. NO.
001=001 pos.
Contact Number of Row
222=D-SUB I.D.C. Series
Number of Contacts
L=Blue B=Black
M=Male F=Female

D-SUB Series

I

KLS1-415 D-SUB 3 ROW SOLDER RIGHT ANGLE 3.08mm TYPE

Electrical Specification:

Current Rating: 2 AMP
Insulator Resistance: 5000M ohms min. at DC 500V
Contact Resistance: 20m ohms max. at DC 100mA
Operating Temperature: -55°C~+105°C

Material:

Housing: 30% Glass filled PBT UL94V-0
Contacts: Phosphor Bronze
Shell: Steel, 100u" Tin Over 50u" min Nickel
Clinch Nut: Brass, 100u" min Nickel Plated
Screwlock: Brass, 100u" min Nickel Plated



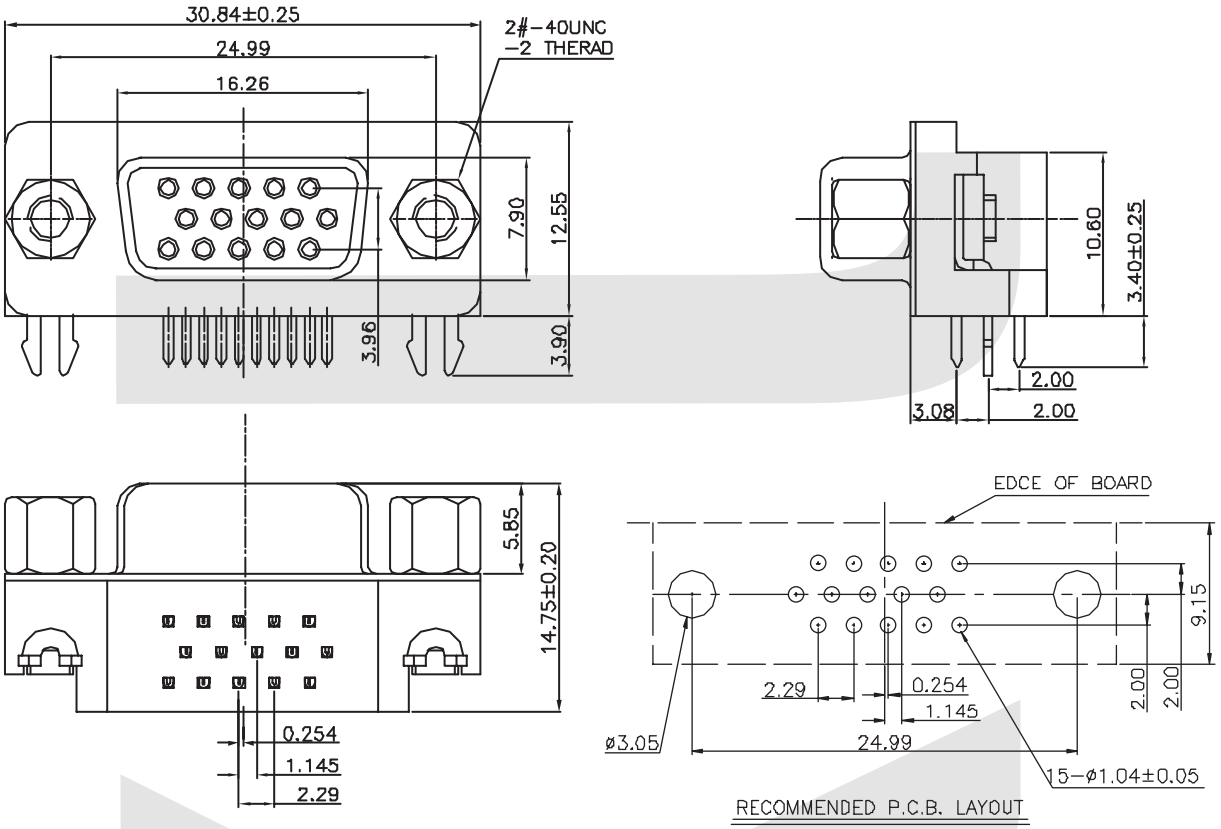

RECOMMENDED P.C.B. LAYOUT

ORDER INFORMATION

Product NO.: KLS1-415-XX -F -L

Pos. NO.
001=001 pos.
Contact Number of Row
415=HDR Series
Number of Contacts: XX=15Pin
F=Female
L=Blue B=Black

D-SUB Series

KLS1-171A 2 ROW TYPE

Electrical Specification:

Current Rating: 2 AMP
Insulator Resistance: 5000M ohms min. at DC 500V
Contact Resistance: 20m ohms max. at DC 100mA
Operating Temperature: -55ºC~+105ºC

Material:

Housing: 30% Glass filled PBT UL94V-0
Contacts: Phosphor Bronze
Shell: Steel, 100u" Tin Over 50u" min Nickel
Clinch Nut: Brass, 100u" min Nickel Plated
Screwlock: Brass, 100u" min Nickel Plated



MALE

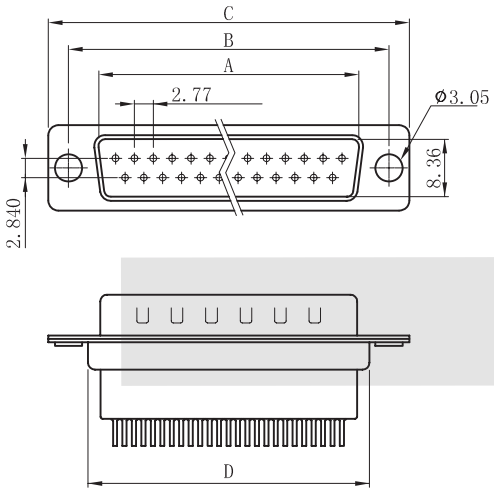

FEMALE

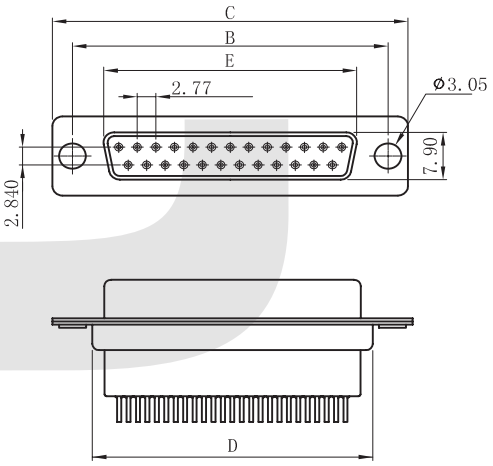

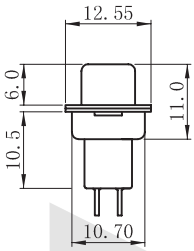

Circuits	Dimension				
	Dim.A	Dim.B	Dim.C	Dim.D	Dim.E
9	16.92	24.99	30.80	19.23	16.33
15	25.25	33.32	39.10	27.56	24.66
25	38.96	47.04	53.00	41.28	38.38
37	55.42	63.50	69.30	57.73	54.84

ORDER INFORMATION

Product NO.: KLS1-171A-XX -F -L

Pos. NO.
001=001 pos.
Contact Number of Row
171A=D-SUB 2 Row Series
Number of Contacts
M=Male F=Female
L=Blue B=Black

D-SUB Series

KLS1-171B 3 ROW TYPE

Electrical Specification:

Current Rating: 2 AMP
Insulator Resistance: 5000M ohms min. at DC 500V
Contact Resistance: 20m ohms max. at DC 100mA
Operating Temperature: -55ºC~+105ºC

Material:

Housing: 30% Glass filled PBT UL94V-0
Contacts: Phosphor Bronze
Shell: Steel, 100u" Tin Over 50u" min Nickel
Clinch Nut: Brass, 100u" min Nickel Plated
Screwlock: Brass, 100u" min Nickel Plated



MALE

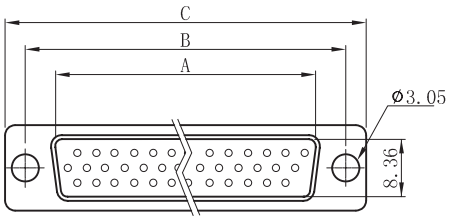

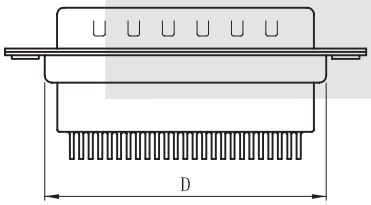

FEMALE

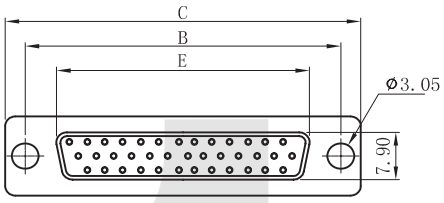

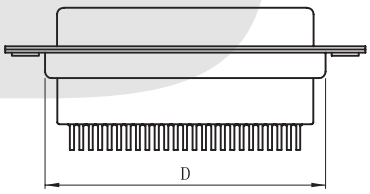

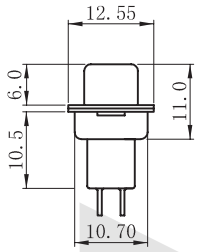

Circuits	Dimension				
	Dim.A	Dim.B	Dim.C	Dim.D	Dim.E
15	16.92	24.99	30.80	19.23	16.33
26	25.25	33.32	39.10	27.56	24.66
44	38.96	47.04	53.00	41.28	38.38
62	55.42	63.50	69.30	57.73	54.84

ORDER INFORMATION

Product NO.: KLS1-171B-XX -F -L

Pos. NO.
001=001 pos.
Contact Number of Row
171B=D-SUB 3 Row Series
Number of Contacts
L=Blue B=Black
M=Male F=Female

D-SUB Series

KLS1-176B 3 ROW TYPE

Electrical Specification:

Current Rating: 2 AMP
Insulator Resistance: 1000M ohms min. at DC 500V
Contact Resistance: 20m ohms max. at DC 100mA
Operating Temperature: -20°C~+85°C
Application wire AWG : 20-24 AWG

Material:

Housing: 30% Glass filled PBT UL94V-0
Contacts: Phosphor Bronze
Shell: Steel, 100u" Tin Over 50u" min Nickel
Clinch Nut: Brass, 100u" min Nickel Plated
Screwlock: Brass, 100u" min Nickel Plated



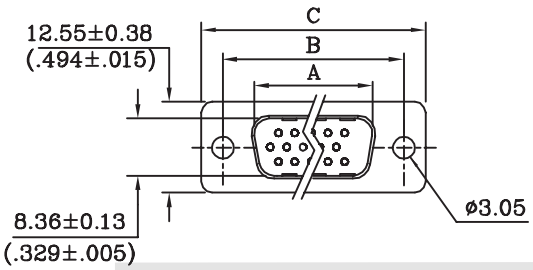

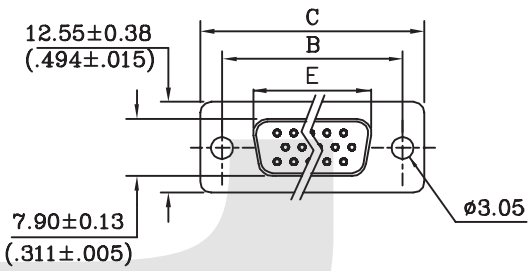

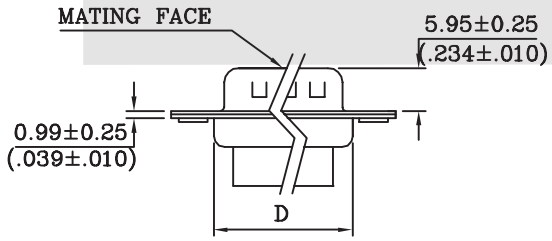

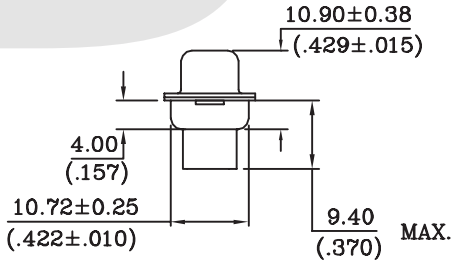

No.of Contact	A ±0.25 ±0.01	B ±0.13 ±0.005	C ±0.38 ±0.015	D ±0.25 ±0.01	E ±0.25 ±0.01
15	16.92 0.666	24.99 0.984	30.81 1.213	19.28 0.759	16.33 0.643
26	25.25 0.994	33.32 1.312	39.14 1.541	27.51 1.083	24.66 0.971
44	38.96 1.534	47.04 1.852	53.04 2.088	41.28 1.625	38.38 1.511
62	55.42 2.182	63.50 2.500	69.32 2.729	57.71 2.272	54.84 2.159

ORDER INFORMATION

Product NO.: KLS1-176B-XX -F -L

Pos. NO.
001=001 pos.
Contact Number of Row
176B=D-SUB 3 Row Series
Number of Contacts
M=Male F=Female
L=Blue B=Black

D-SUB Series

KLS1-176A 2 ROW TYPE

Electrical Specification:

Current Rating: 2 AMP
Insulator Resistance: 1000M ohms min. at DC 500V
Contact Resistance: 20m ohms max. at DC 100mA
Operating Temperature: -20ºC~+85ºC
Application wire AWG : 20-24 AWG

Material:

Housing: 30% Glass filled PBT UL94V-0
Contacts: Phosphor Bronze
Shell: Steel, 100u" Tin Over 50u" min Nickel
Clinch Nut: Brass, 100u" min Nickel Plated
Screwlock: Brass, 100u" min Nickel Plated



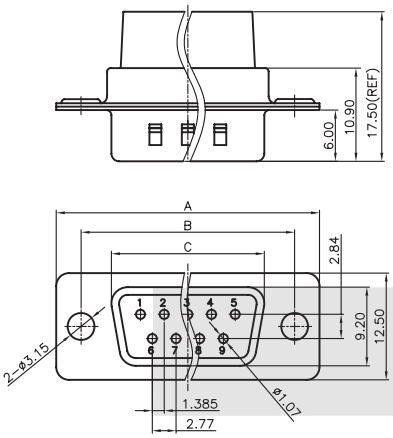

Male

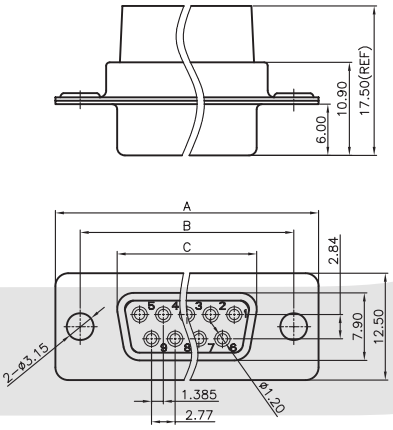

Female

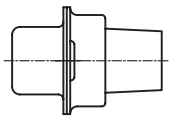

Standard

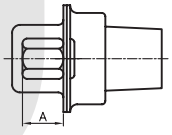

CC TYPE

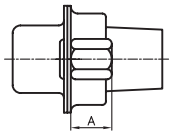

CS TYPE

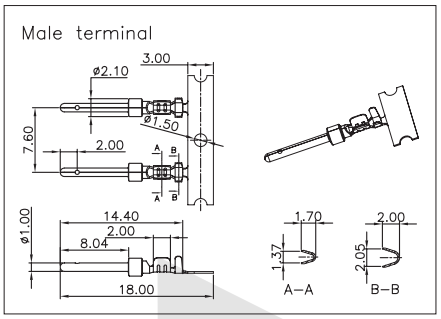

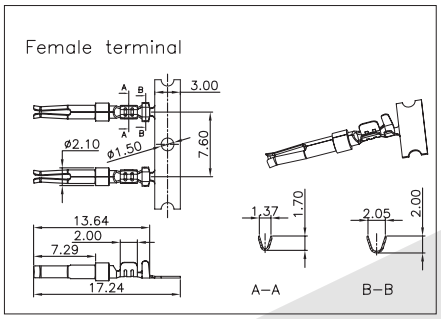

Position	A±0.2	B±0.2	C±0.2	
			Male	Female
9P	30.80	24.99	17.90	16.33
15P	39.14	33.32	26.50	24.66
25P	53.04	47.04	40.00	38.38
37P	69.32	63.50	56.50	54.84

ORDER INFORMATION

Product NO.: KLS1-176A-XX -F -L

Pos. NO.
001=001 pos.
Contact Number of Row
176A=D-SUB 2 Row Series
Number of Contacts
L=Blue B=Black
M=Male F=Female

D-SUB Series

I

KLS1-185M MINI ADAPTOR DB 9-25Pin Male-Male

Electrical Specification:

Current Rating: 2 AMP
Insulator Resistance: 5000M ohms min. at DC 500V
Contact Resistance: 20m ohms max. at DC 100mA
Operating Temperature: -55ºC~+105ºC

Material:

Housing: 30% Glass filled PBT UL94V-0
Contacts: Phosphor Bronze
Shell: Steel, 100u" Tin Over 50u" min Nickel
Clinch Nut: Brass, 100u" min Nickel Plated
Screwlock: Brass, 100u" min Nickel Plated



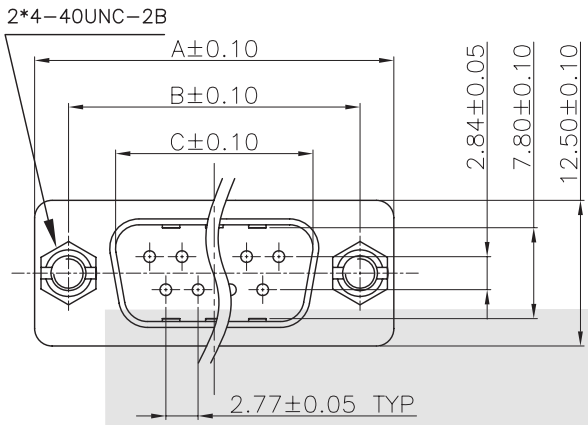

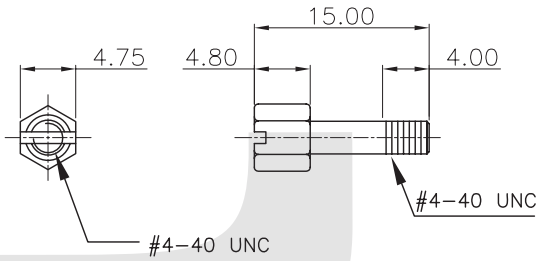

Screw specification

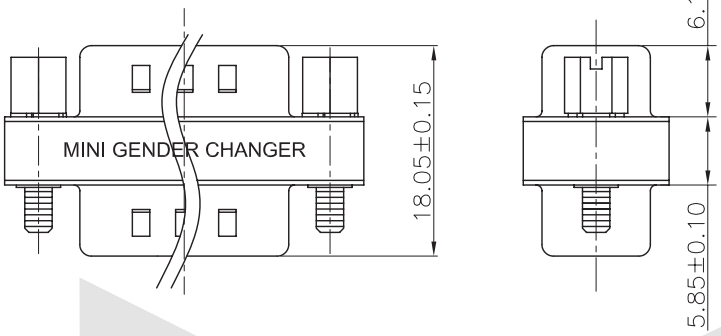

PIN NO.	DIM A	DIM B	DIM C
9P	30.80	24.99	16.92
15P	39.20	33.30	25.25
25P	53.05	47.04	38.96
37P	69.32	63.50	54.84

ORDER INFORMATION

Product NO.: KLS1-185-XXM/XXM -L

Pos. NO.
001=001 pos.

Contact Number of Row
185=2 Row type

L=Blue B=Black

Number of Contacts
9M/9M 15M/15M 25M/25M
9F/9F 15F/15F 25F/25F
9M/9F 15M/15F 25M/25F

D-SUB Series

I

KLS1-185M-F MINI ADAPTOR DB 9-25Pin Male-Female

Electrical Specification:

Current Rating: 2 AMP
Insulator Resistance: 5000M ohms min. at DC 500V
Contact Resistance: 20m ohms max. at DC 100mA
Operating Temperature: -55°C~+105°C

Material:

Housing: 30% Glass filled PBT UL94V-0
Contacts: Phosphor Bronze
Shell: Steel, 100u" Tin Over 50u" min Nickel
Clinch Nut: Brass, 100u" min Nickel Plated
Screwlock: Brass, 100u" min Nickel Plated



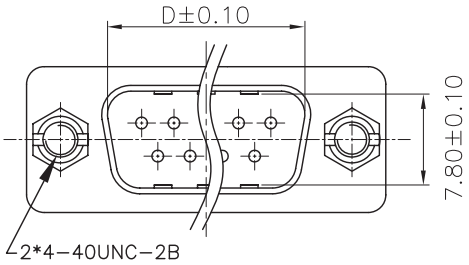

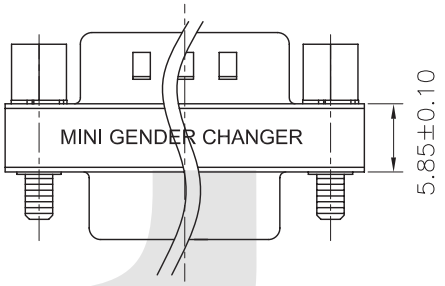

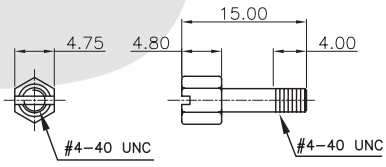

Screw specification

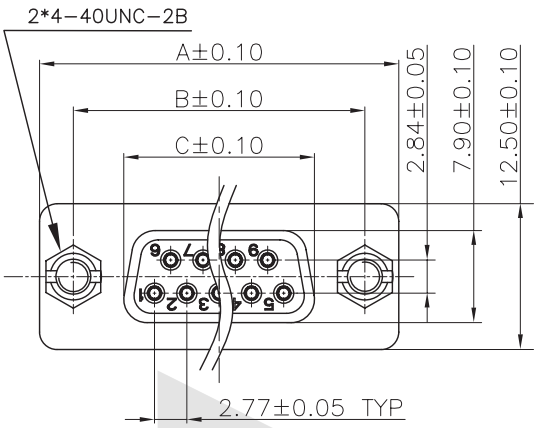

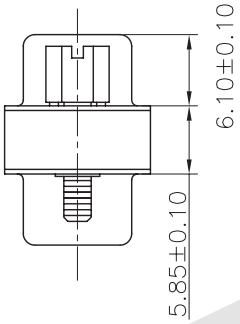

PIN NO.	DIM A	DIM B	DIM C
9P	30.80	24.99	16.35
15P	39.20	33.30	24.70
25P	53.05	47.04	38.40
37P	69.32	63.50	54.80

ORDER INFORMATION

Product NO.: KLS1-185 - XXM/XXF -L

Pos. NO.
001=001 pos.

Contact Number of Row
185=2 Row Type

L=Blue B=Black

Number of Contacts
9M/9M 15M/15M 25M/25M
9F/9F 15F/15F 25F/25F
9M/9F 15M/15F 25M/25F

D-SUB Series

I

KLS1-186 MINI ADAPTOR HDB 9-25Pin Female-Female

Electrical Specification:
Current Rating: 2 AMP
Insulator Resistance: 5000M ohms min. at DC 500V
Contact Resistance: 20m ohms max. at DC 100mA
Operating Temperature: -55ºC~+105ºC

Material:
Housing: 30% Glass filled PBT UL94V-0
Contacts: Phosphor Bronze
Shell: Steel, 100u" Tin Over 50u" min Nickel
Clinch Nut: Brass, 100u" min Nickel Plated
Screwlock: Brass, 100u" min Nickel Plated



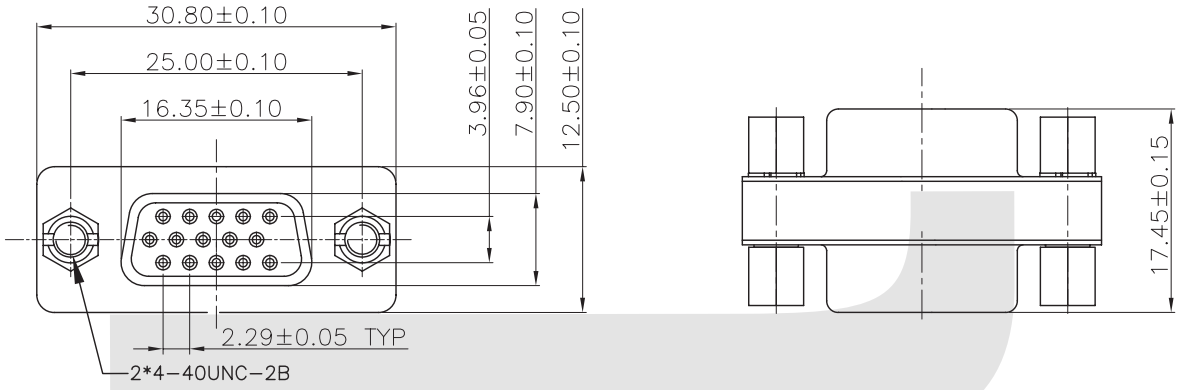

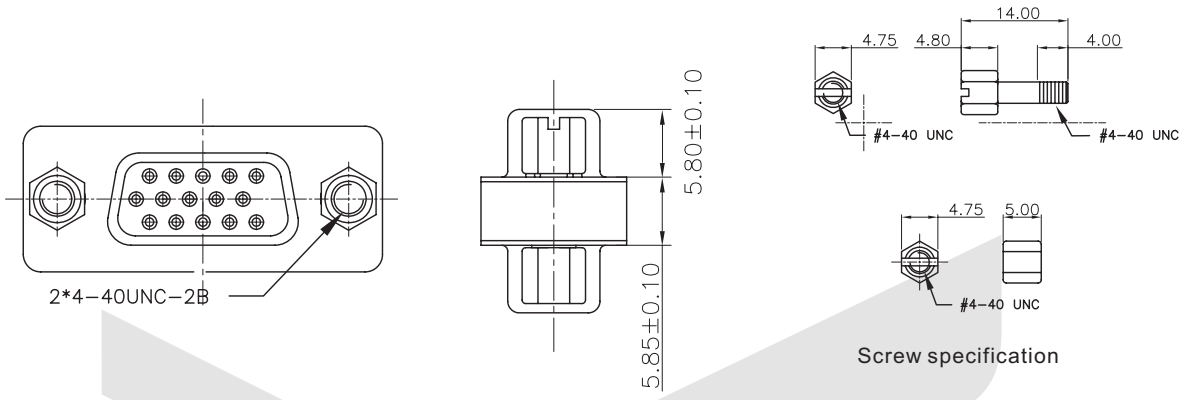

Screw specification

ORDER INFORMATION

Product NO.: KLS1- 186 - XXF/XXF -L

Pos. NO.
001=001 pos.

Contact Number of Row
186=3 Row Type

Number of Contacts
15M/15M 15F/15F 15M/15F

L=Blue B=Black

D-SUB Series

I

KLS1-186 MINI ADAPTOR HDB 9-25Pin Male-Male

Electrical Specification:

Current Rating: 2 AMP
Insulator Resistance: 5000M ohms min. at DC 500V
Contact Resistance: 20m ohms max. at DC 100mA
Operating Temperature: -55ºC~+105ºC

Material:

Housing: 30% Glass filled PBT UL94V-0
Contacts: Phosphor Bronze
Shell: Steel, 100u" Tin Over 50u" min Nickel
Clinch Nut: Brass, 100u" min Nickel Plated
Screwlock: Brass, 100u" min Nickel Plated



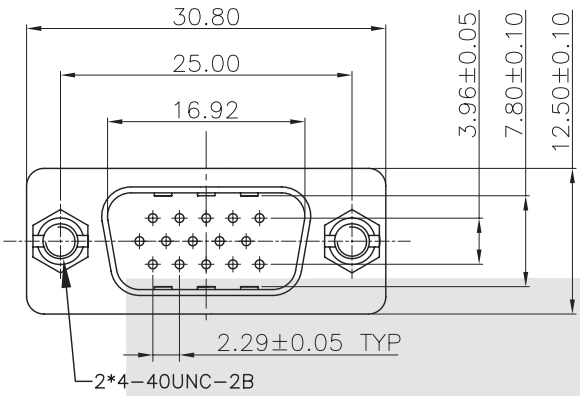

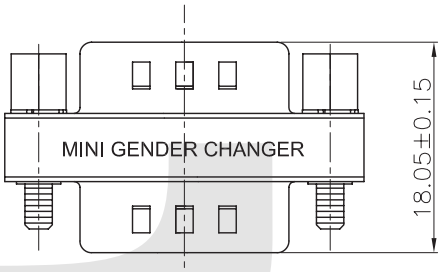

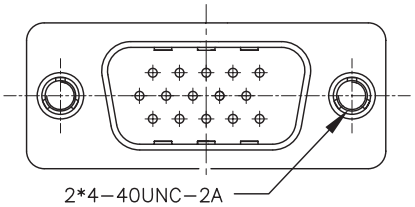

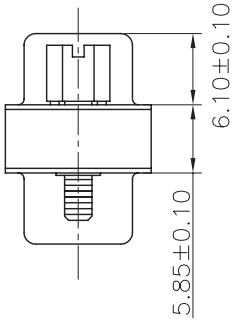

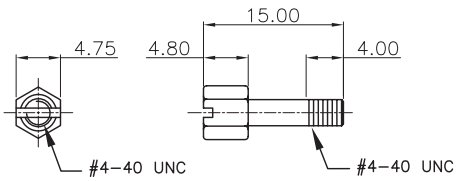

Screw specification

ORDER INFORMATION

Product NO.: KLS1-186-15M/15M -L

Pos. NO.
001=001 pos.

Contact Number of Row
186=3 Row Type

L=Blue B=Black

Number of Contacts
15M/15M 15F/15F 15M/15F

D-SUB Series

I

KLS1-186 MINI ADAPTOR HDB 9-25Pin Male-Female

Electrical Specification:

Current Rating: 2 AMP
Insulator Resistance: 5000M ohms min. at DC 500V
Contact Resistance: 20m ohms max. at DC 100mA
Operating Temperature: -55ºC~+105ºC

Material:

Housing: 30% Glass filled PBT UL94V-0
Contacts: Phosphor Bronze
Shell: Steel, 100u" Tin Over 50u" min Nickel
Clinch Nut: Brass, 100u" min Nickel Plated
Screwlock: Brass, 100u" min Nickel Plated



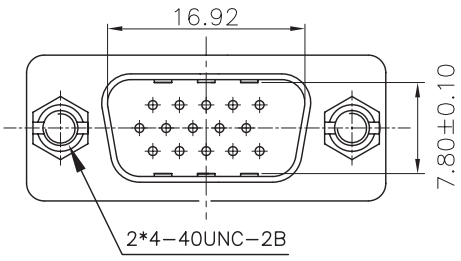

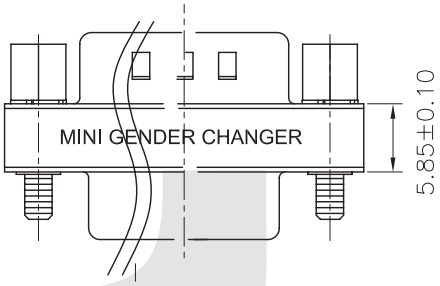

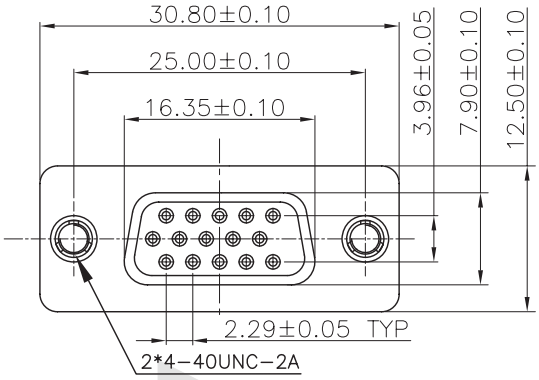

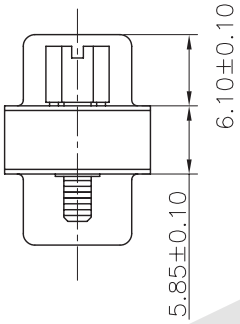

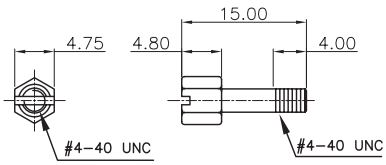

Screw specification

ORDER INFORMATION

Product NO.: KLS1-186 - 15M/15F -L

Pos. NO.
001=001 pos.

Contact Number of Row
186=3 Row Type

L=Blue B=Black

Number of Contacts
15M/15M 15F/15F 15M/15F

D-SUB Series

KLS1-DB D-SUB HOOD PLASTIC MATERIAL 09-37Pin

Cover Material: ABS Plastic
Screw Material: STEEL



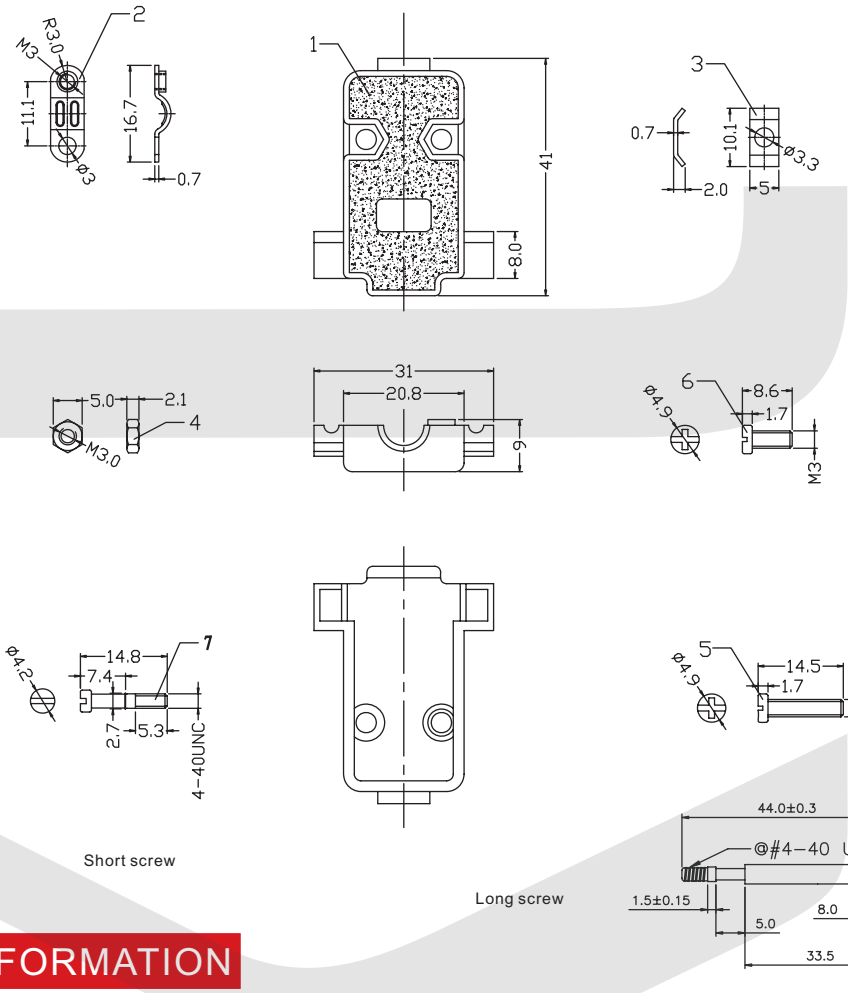

ORDER INFORMATION

Product NO.: KLS1-DB-09P-L G

- Pos. NO. 001=001 pos.
- Contact Number of Row DB=D-SUB HOOD PLASTIC MATERIAL
- Number of Contacts
- Color: G-Gray B-Black
- L : Long screw
- S : Short screw

D-SUB Series

KLS1-DB D-SUB HOOD PLASTIC MATERIAL 09-37Pin

Cover Material: ABS Plastic
Screw Material: STEEL



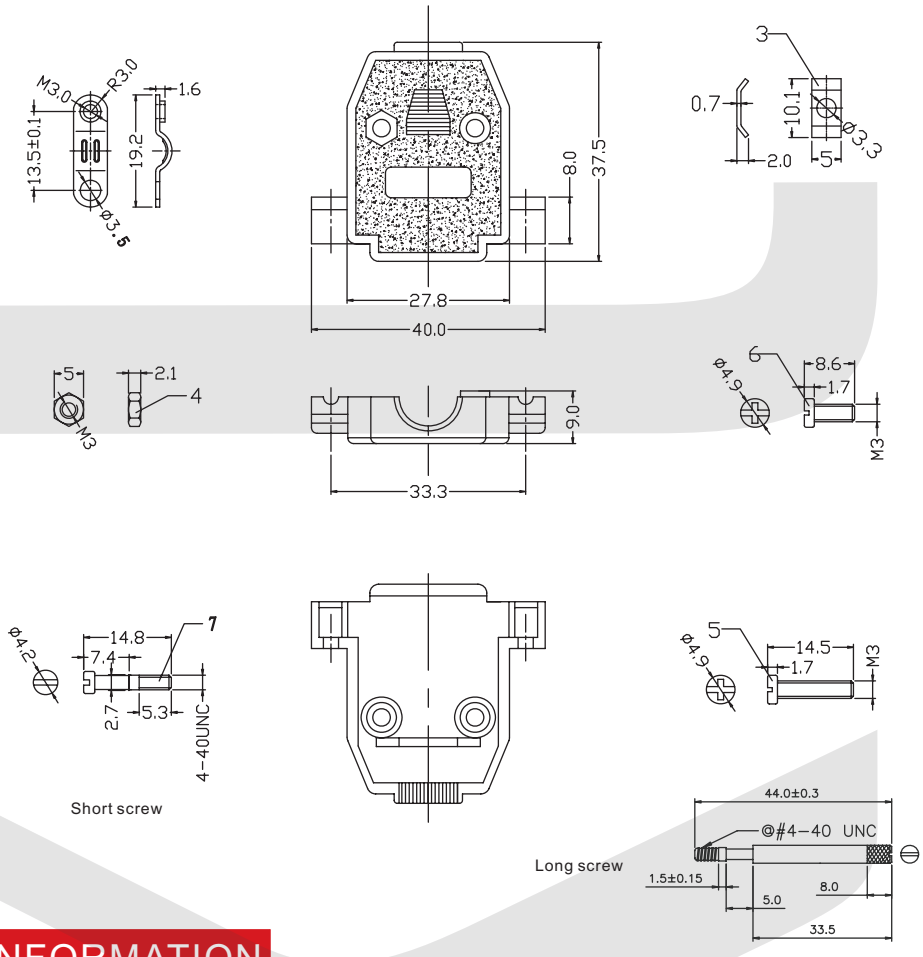

ORDER INFORMATION

Product NO.: KLS1-DB-15P-L G

- Pos. NO. 001=001 pos.
- Contact Number of Row DB=D-SUB HOOD PLASTIC MATERIAL
- Number of Contacts
- Color: G-Gray B-Black
- L : Long screw
- S : Short screw

D-SUB Series

I

KLS1-DB D-SUB HOOD PLASTIC MATERIAL 09-37Pin

Cover Material: ABS Plastic
Screw Material: STEEL



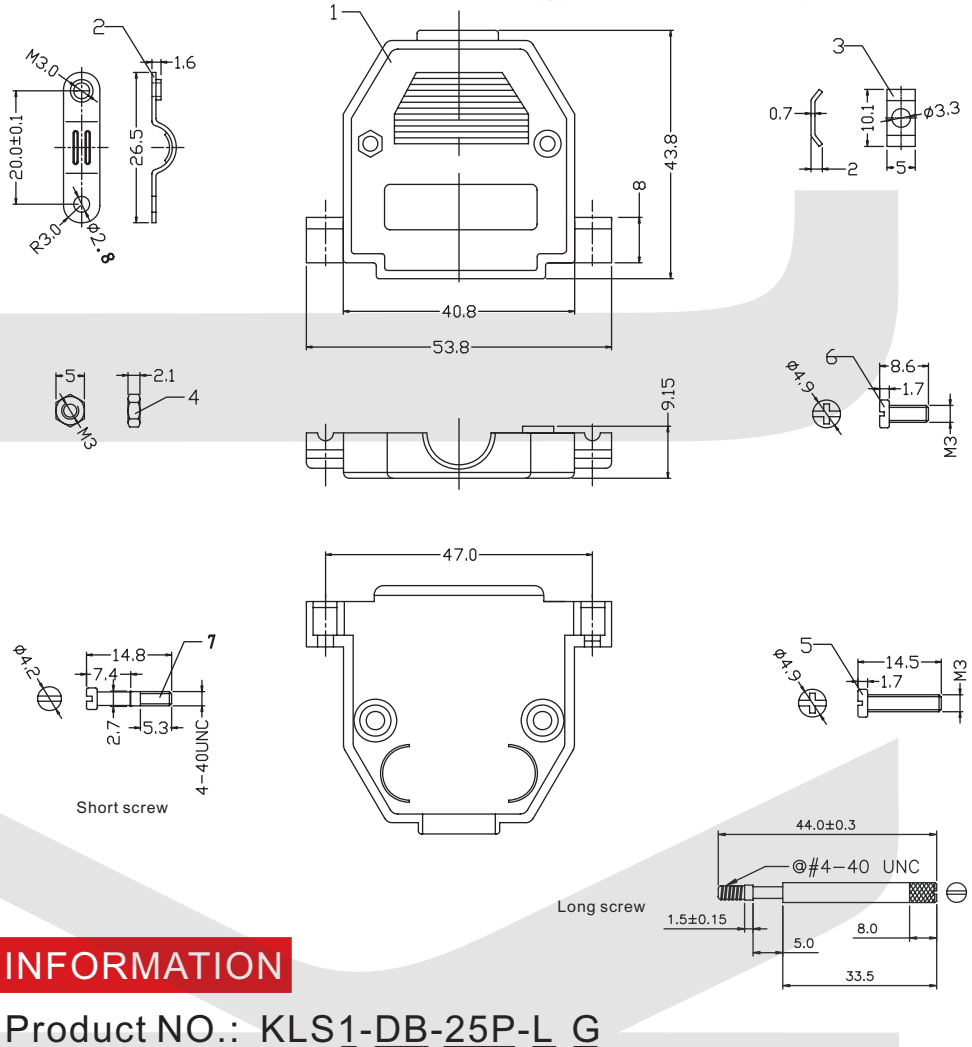

ORDER INFORMATION

Product NO.: KLS1-DB-25P-L G

- Pos. NO. 001=001 pos.
- Contact Number of Row DB=D-SUB HOOD PLASTIC MATERIAL
- Number of Contacts
- L : Long screw S : Short screw
- Color: G-Gray B-Black

D-SUB Series

I

KLS1-DB D-SUB HOOD PLASTIC MATERIAL 09-37Pin

Cover Material: ABS Plastic
Screw Material: STEEL



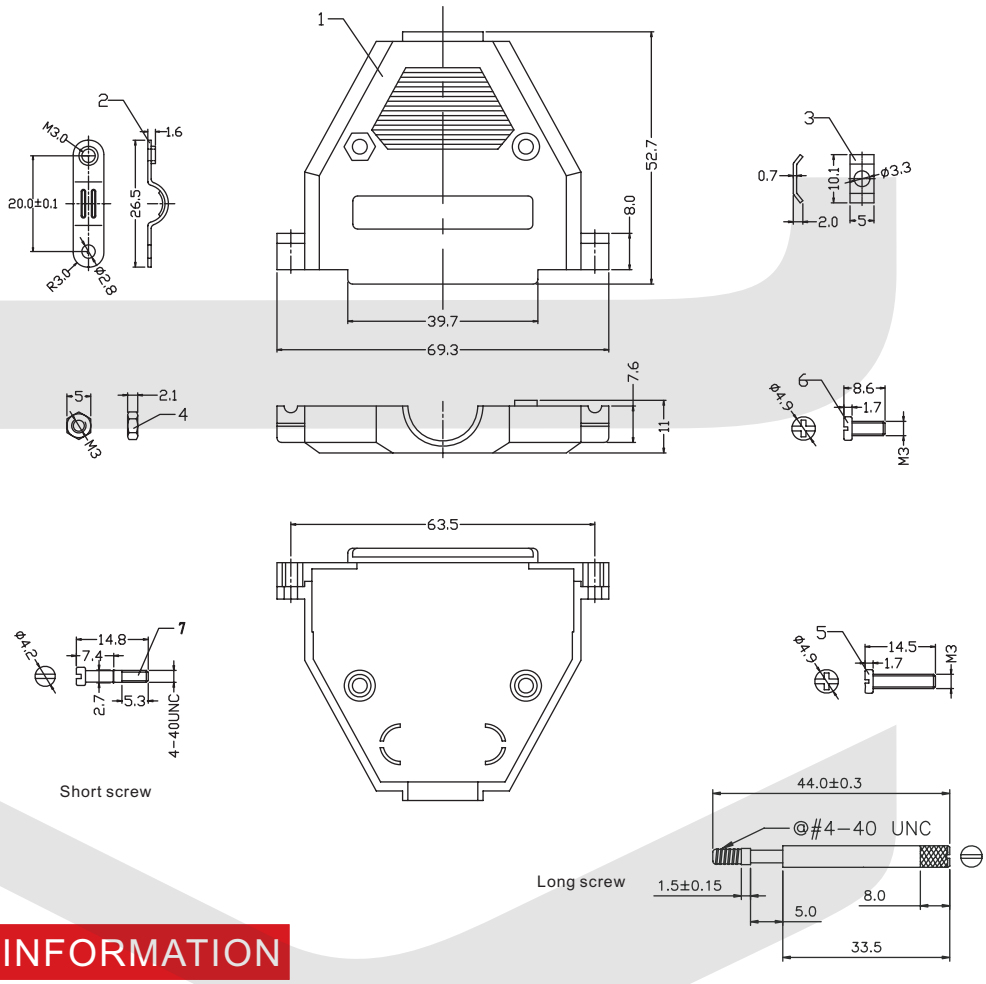

ORDER INFORMATION

Product NO.: KLS1-DB-37P-L G

- Pos. NO. 001=001 pos.
- Contact Number of Row DB=D-SUB HOOD PLASTIC MATERIAL
- Number of Contacts
- L : Long screw S : Short screw
- Color: G-Gray B-Black

D-SUB Series

KLS1-DBC D-SUB Long Ear Plastic Hood 09-25Pin Series

Cover Material: ABS UL94HB
Screw Material: Steel



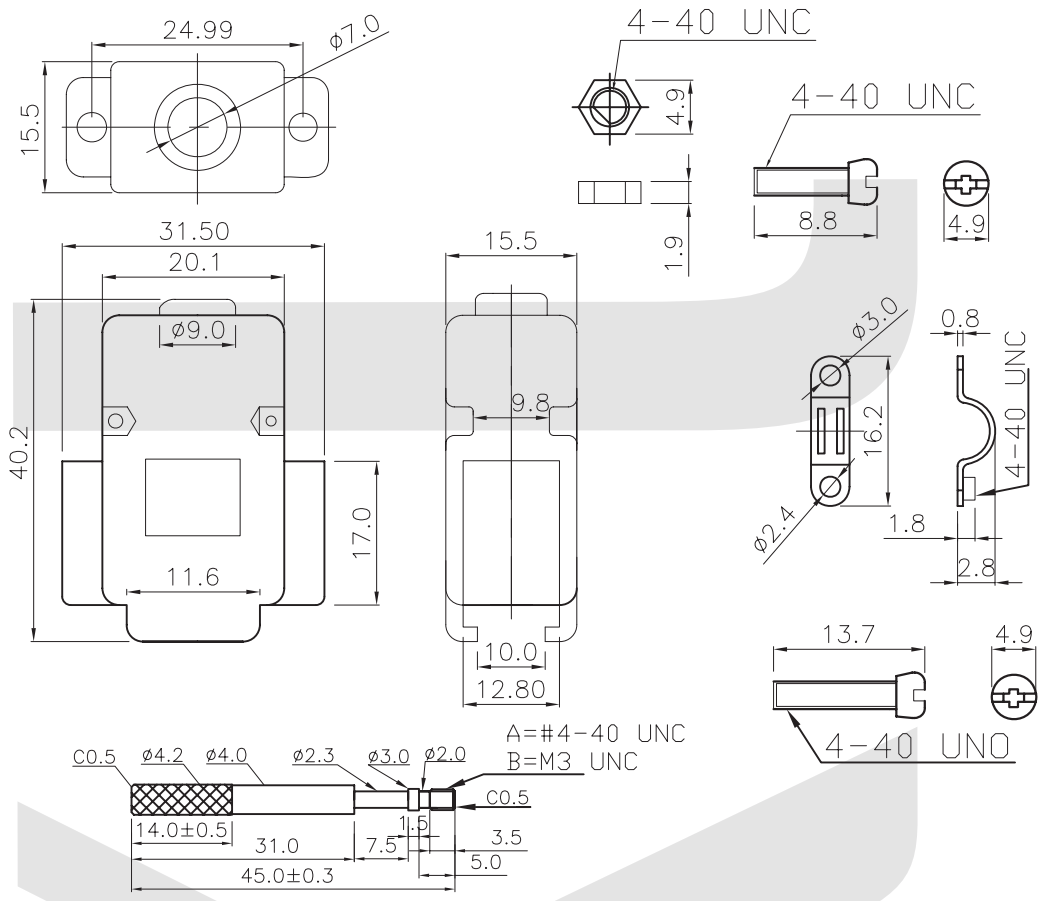

ORDER INFORMATION

Product NO.: KLS1-DBC-09P-L

- Pos. NO. 001=001 pos.
- Contact Number of Row DBC=D-SUB Long Ear Plastic Hood Series
- L: Long screw
- Number of Contacts

D-SUB Series

KLS1-DBC D-SUB Long Ear Plastic Hood 09-25Pin Series

Cover Material: ABS UL94HB
Screw Material: Steel



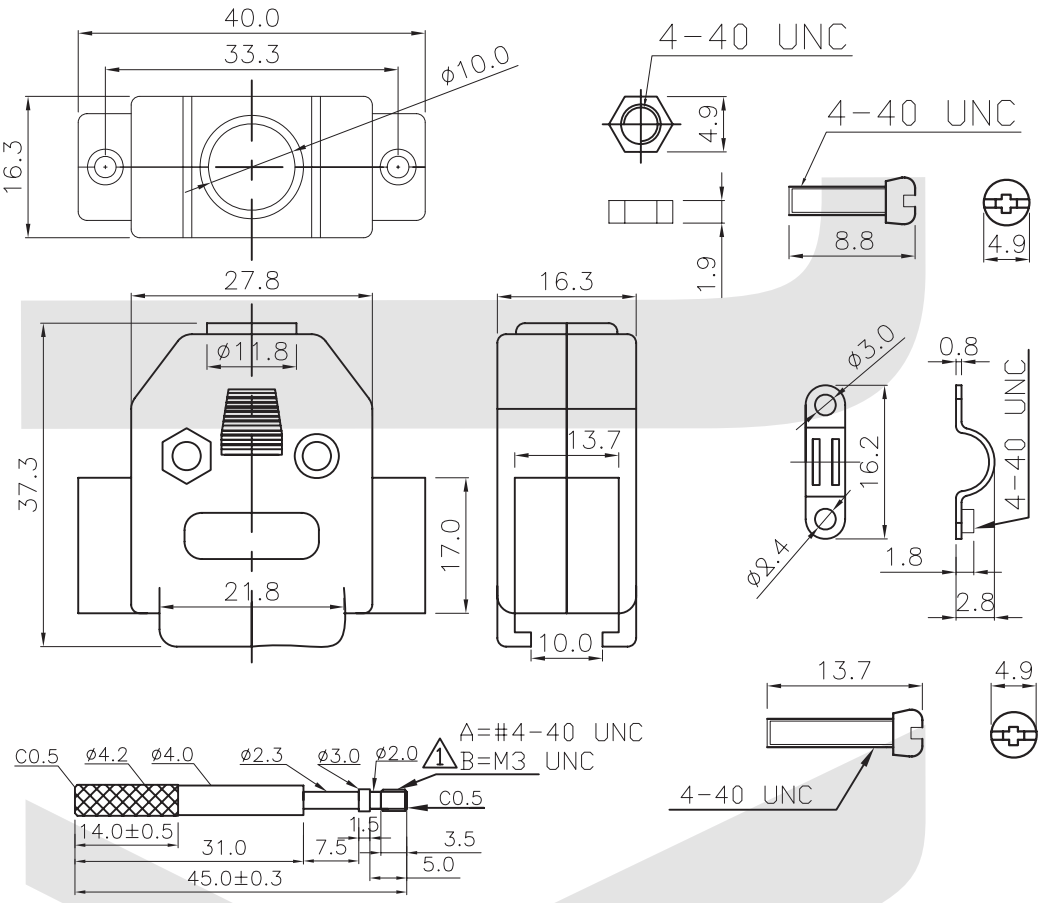

ORDER INFORMATION

Product NO.: KLS1-DBC-15P-L

- Pos. NO. 001=001 pos.
- Contact Number of Row DBC=D-SUB Long Ear Plastic Hood Series
- Number of Contacts
- L: Long screw

D-SUB Series

I

KLS1-DBC D-SUB Long Ear Plastic Hood 09-25Pin Series

Cover Material: ABS UL94HB
Screw Material: Steel



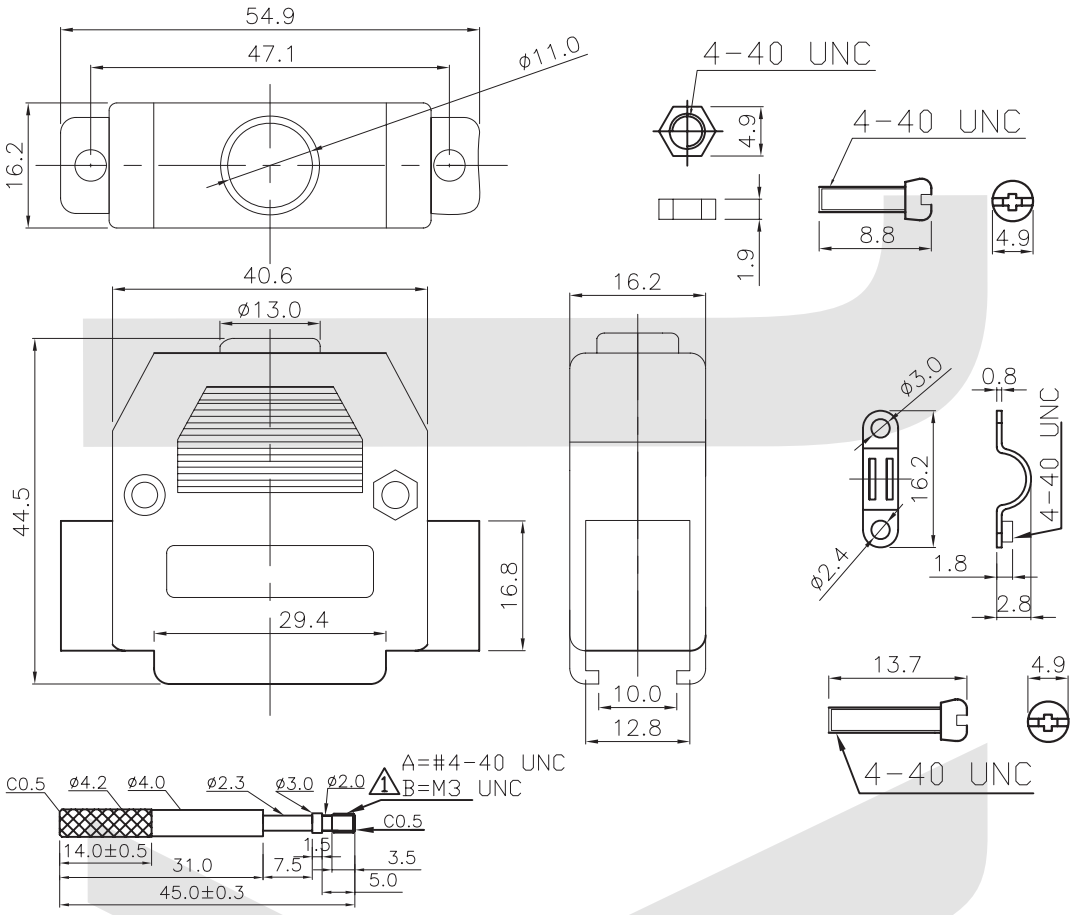

ORDER INFORMATION

Product NO.: KLS1-DBC-25P-L

- Pos. NO. 001=001 pos.
- Contact Number of Row DBC=D-SUB Long Ear Plastic Hood Series
- Number of Contacts
- L: Long screw

D-SUB Series

KLS1-DBD D-SUB Plastic Material Hood 09-50Pin Series

Cover Material: PP
Screw Material: Steel



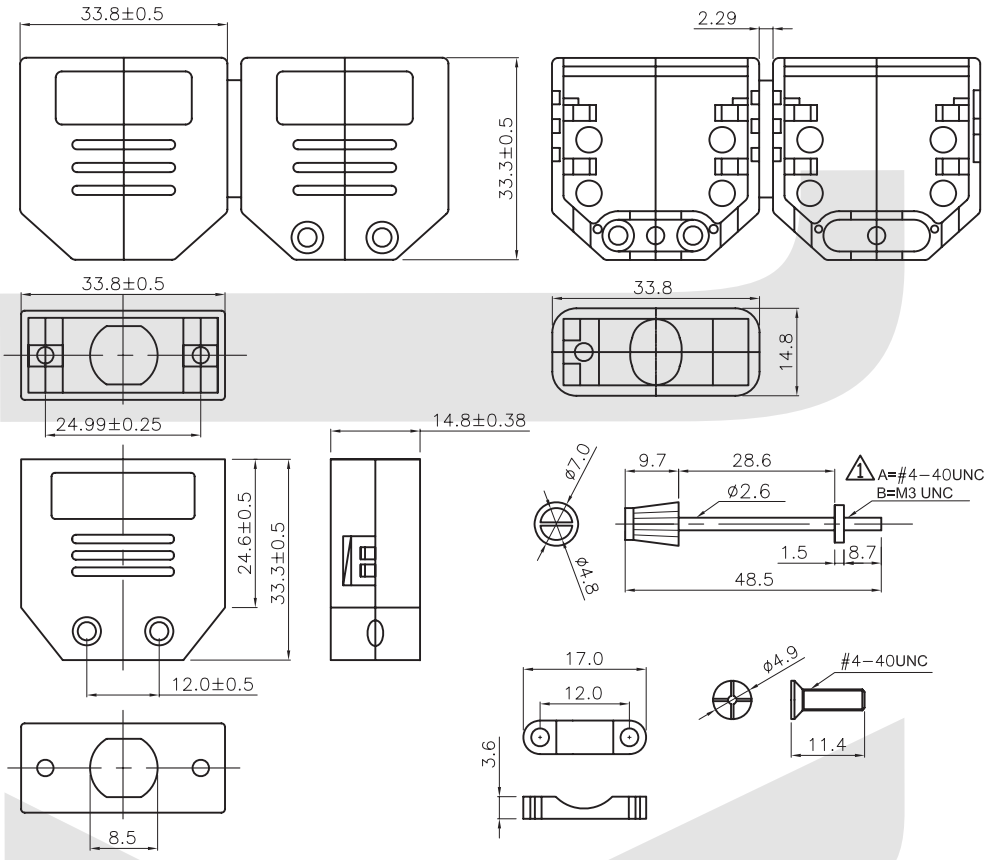

ORDER INFORMATION

Product NO.: KLS1-DBD-09P

Pos. NO.
001=001 pos.

Contact Number of Row
DBD=D-SUB Plastic Material Hood Series

Number of Contacts

D-SUB Series

KLS1-DBD D-SUB Plastic Material Hood 09-50Pin Series

Cover Material: PP
Screw Material: Steel



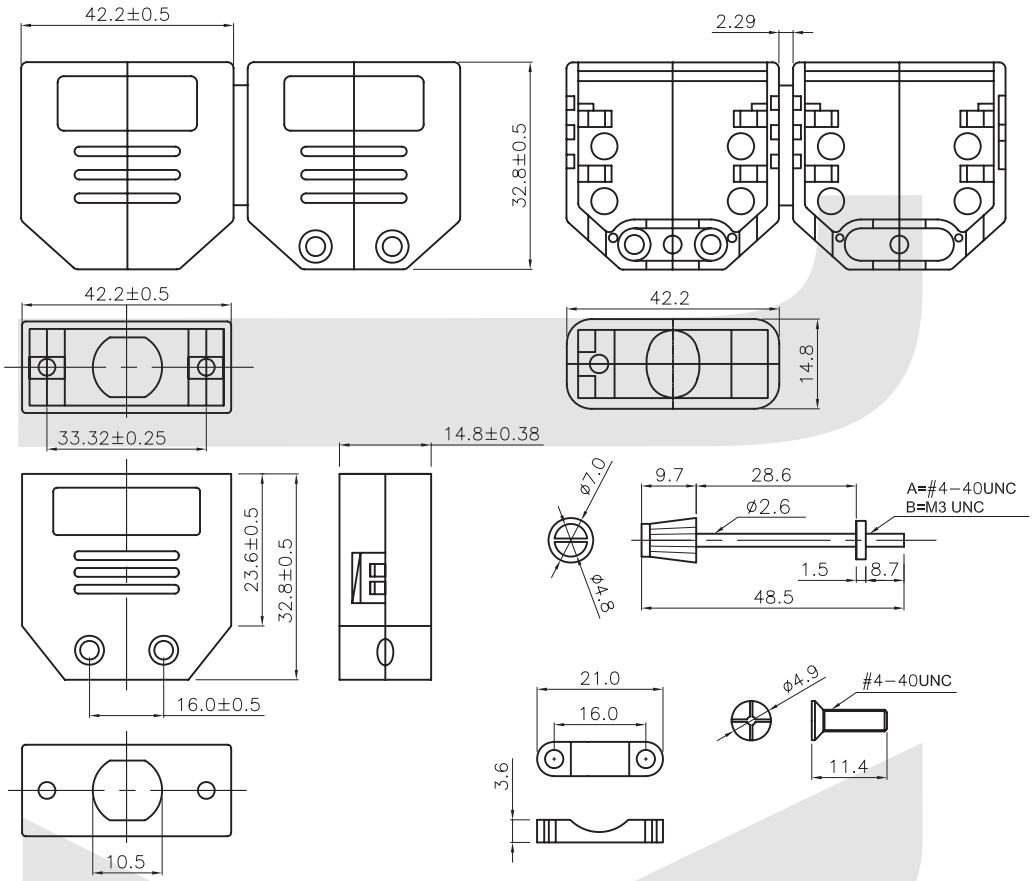

ORDER INFORMATION

Product NO.: KLS1-DBD-15P

Pos. NO.
001=001 pos.

Contact Number of Row
DBD=D-SUB Plastic Material Hood Series

Number of Contacts

D-SUB Series

KLS1-DBD D-SUB Plastic Material Hood 09-50Pin Series

Cover Material: PP
Screw Material: Steel



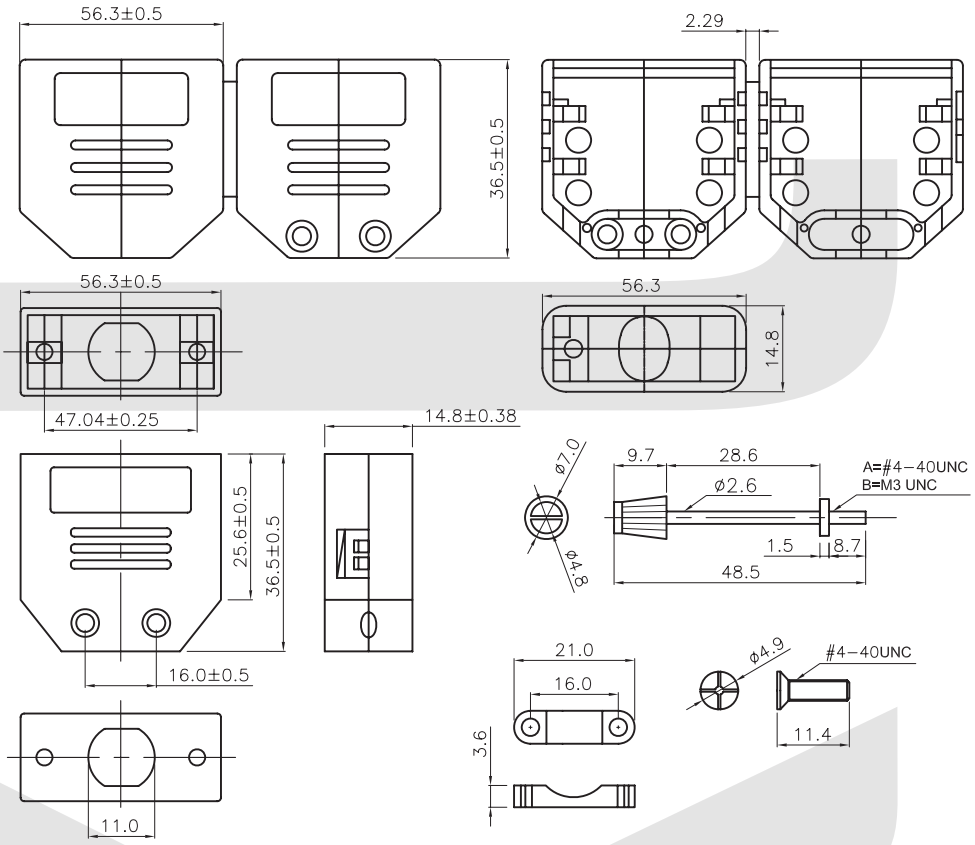

ORDER INFORMATION

Product NO.: KLS1-DBD-25P

Pos. NO.
001=001 pos.

Contact Number of Row
DBD=D-SUB Plastic Material Hood Series

Number of Contacts

D-SUB Series

KLS1-DBD D-SUB Plastic Material Hood 09-50Pin Series

Cover Material: PP
Screw Material: Steel



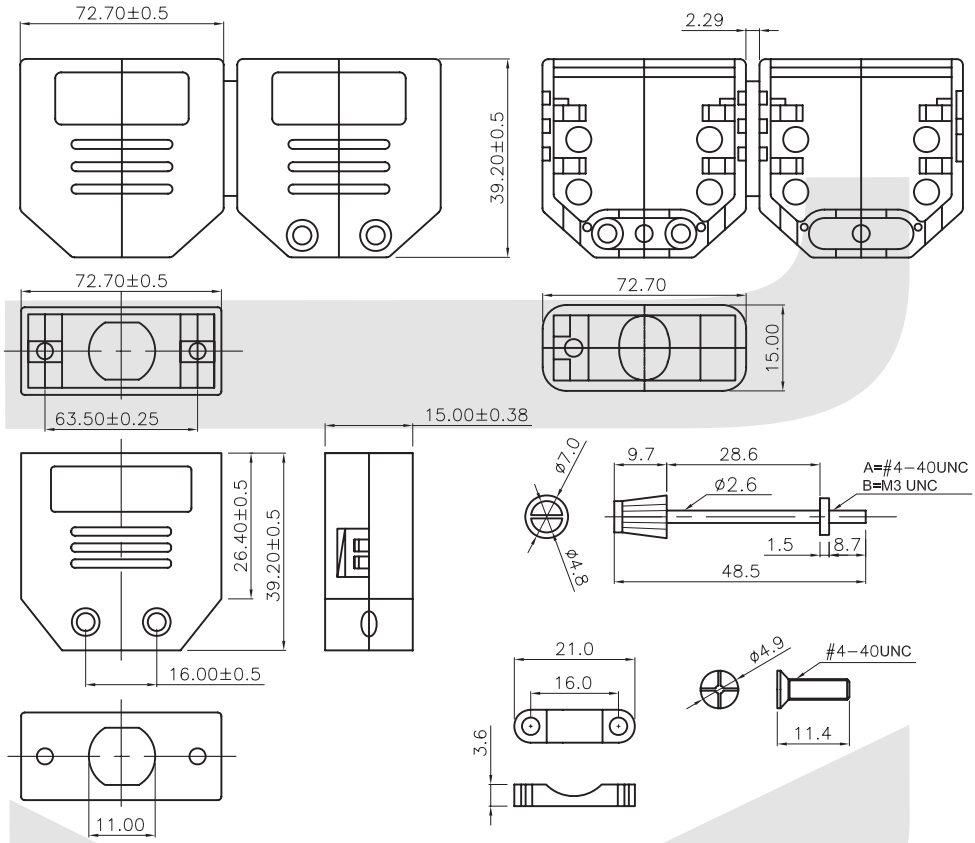

ORDER INFORMATION

Product NO.: KLS1-DBD-37P

Pos. NO.
001=001 pos.

Contact Number of Row
DBD=D-SUB Plastic Material Hood Series

Number of Contacts

D-SUB Series

KLS1-DBD D-SUB Plastic Material Hood 09-50Pin Series

Cover Material: PP
Screw Material: Steel



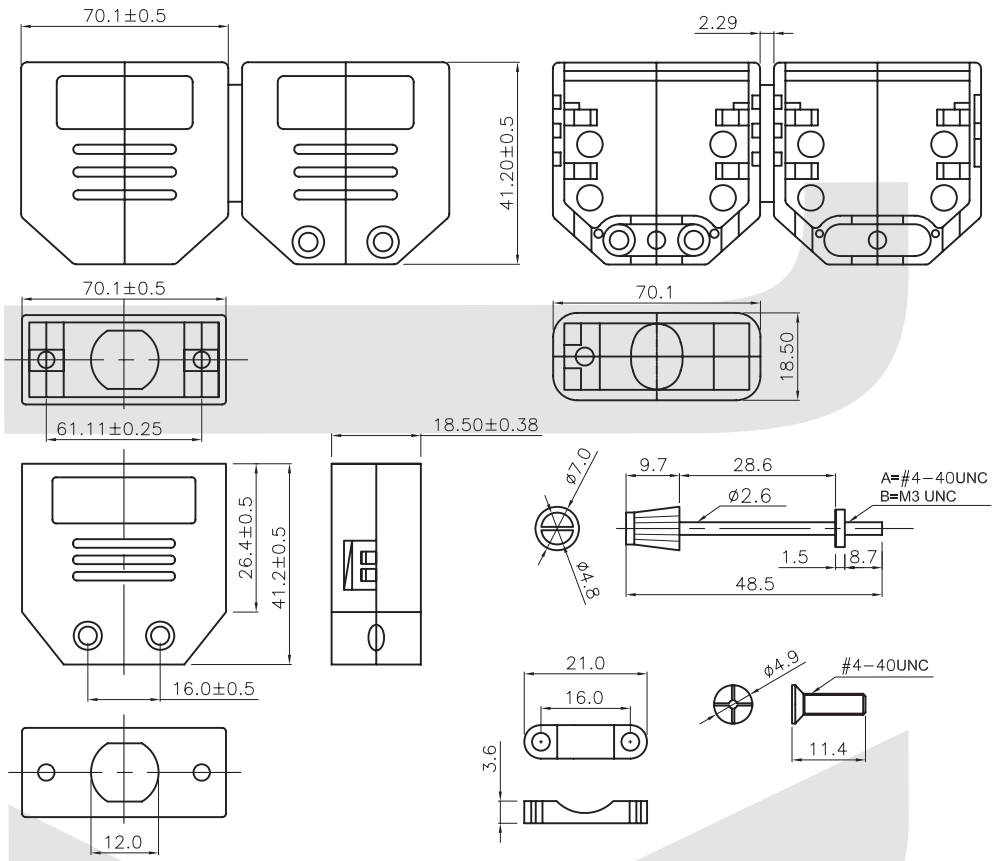

ORDER INFORMATION

Product NO.: KLS1-DBD-50P

Pos. NO.
001=001 pos.

Contact Number of Row
DBD=D-SUB Plastic Material Hood Series

Number of Contacts

D-SUB Series

KLS1-DBE D-SUB Plastic Material Hood 09-25Pin Series

Cover Material: ABS
Screw Material: Steel



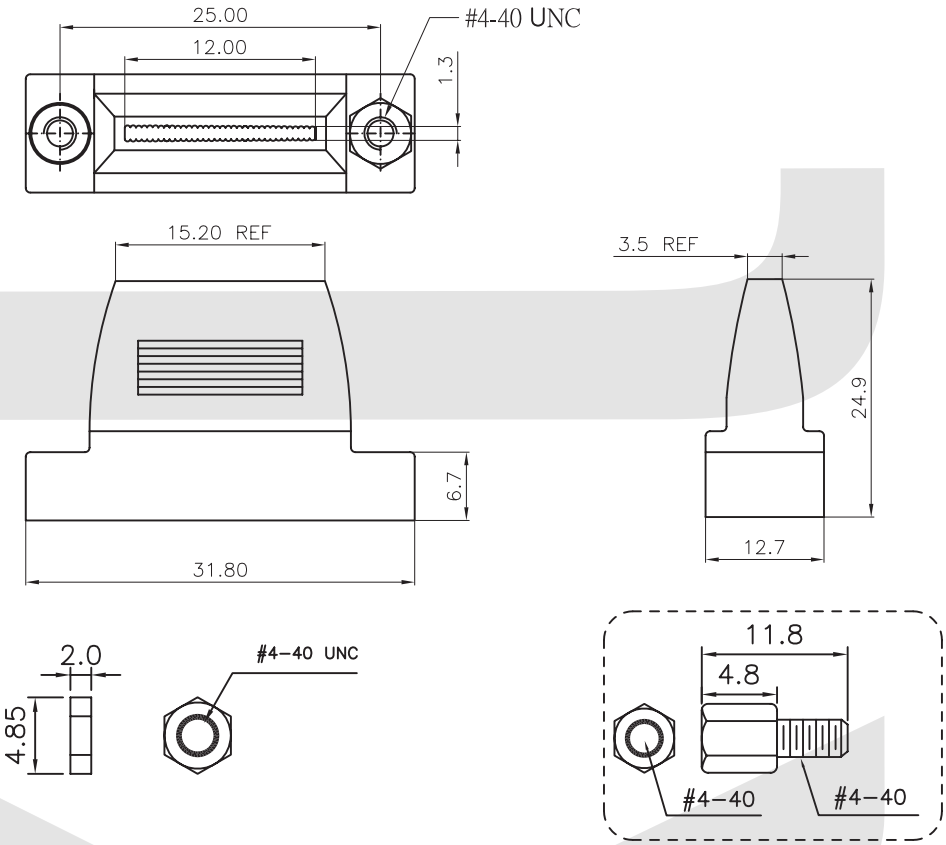

ORDER INFORMATION

Product NO.: KLS1-DBE-09P-S

- Pos. NO. 001=001 pos.
- Contact Number of Row DBE=D-SUB Plastic Material Hood Series
- Number of Contacts
- S : Short screw

D-SUB Series

KLS1-DBE D-SUB Plastic Material Hood 09-25Pin Series

Cover Material: ABS
Screw Material: Steel



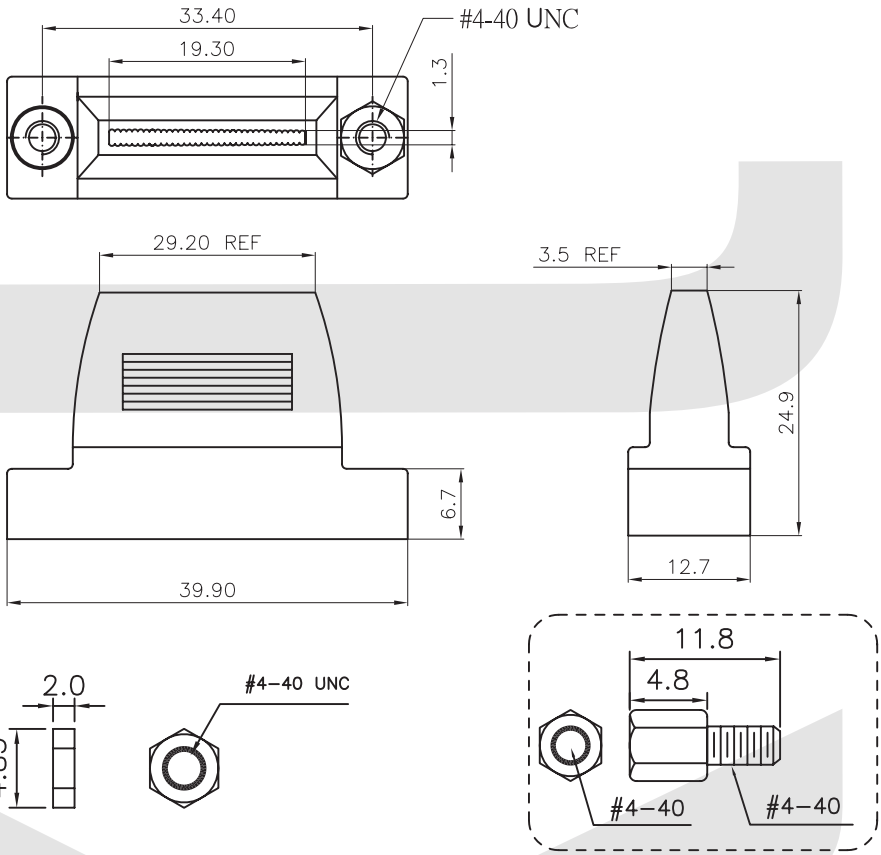

ORDER INFORMATION

Product NO.: KLS1-DBE-15P-S

- Pos. NO. 001=001 pos.
- Contact Number of Row DBE=D-SUB Plastic Material Hood Series
- Number of Contacts
- S : Short screw

D-SUB Series

KLS1-DBE D-SUB Plastic Material Hood 09-25Pin Series

Cover Material: ABS
Screw Material: Steel



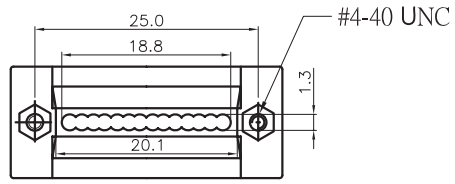

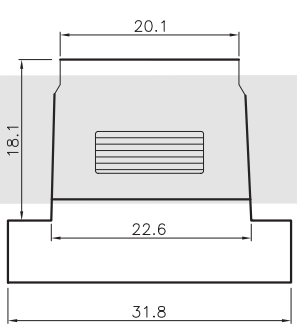

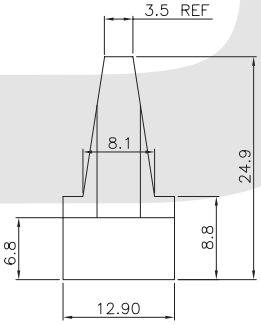

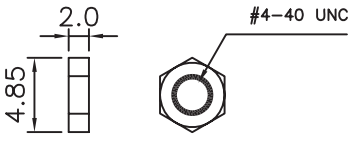

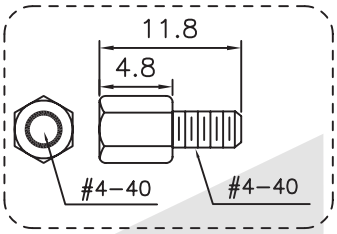

ORDER INFORMATION

Product NO.: KLS1-DBE-HDD15P-S

Pos. NO.
001=001 pos.

Contact Number of Row
DBE=D-SUB Plastic Material Hood Series

S : Short screw

Number of Contacts

D-SUB Series

KLS1-DBE D-SUB Plastic Material Hood 09-25Pin Series

Cover Material: ABS
Screw Material: Steel



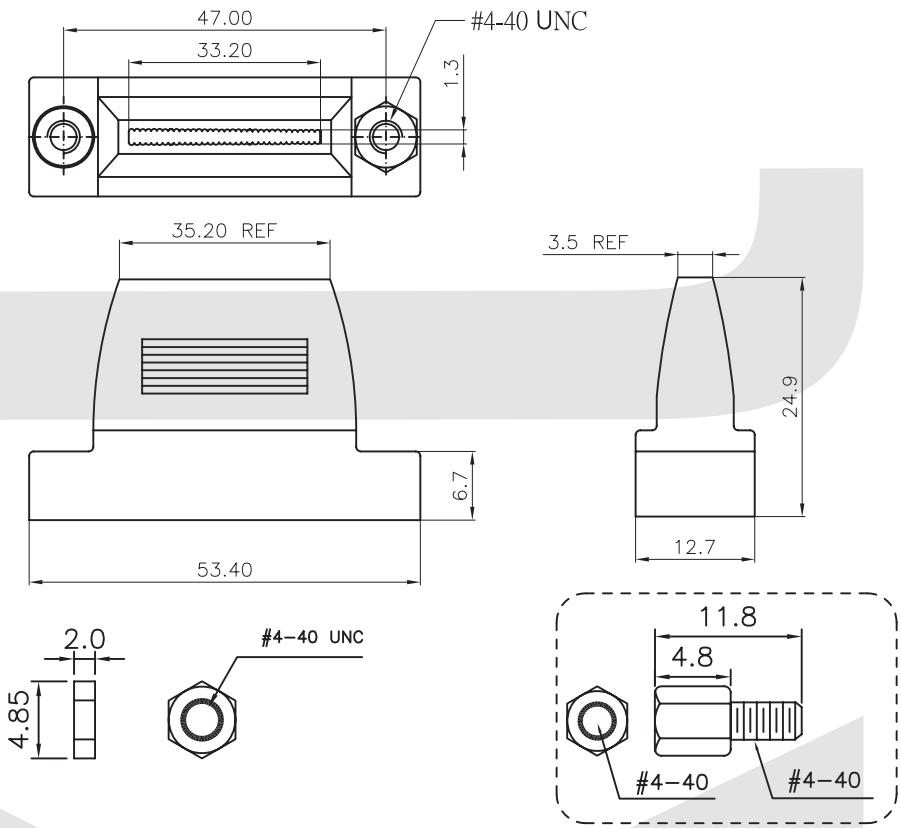

ORDER INFORMATION

Product NO.: KLS1-DBE-25P-S

Pos. NO.
001=001 pos.

Contact Number of Row
DBE=D-SUB Plastic Material Hood Series

S : Short screw

Number of Contacts

D-SUB Series

KLS1-DBE D-SUB Plastic Material Hood 09-25Pin Series

Cover Material: ABS
Screw Material: Steel



25PIN-LOAD 9PIN SOLDER FOR FLAT CABL

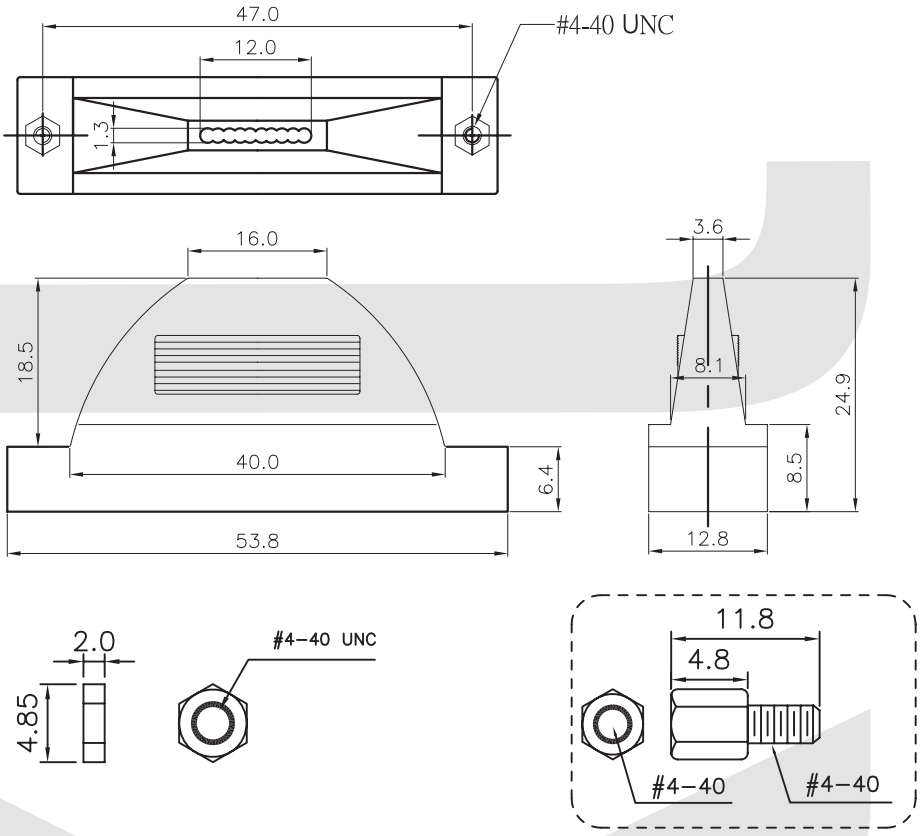

ORDER INFORMATION

Product NO.: KLS1-DBE-25/09P-S

Pos. NO.
001=001 pos.

Contact Number of Row
DBE=D-SUB Plastic Material Hood Series

S : Short screw

Number of Contacts

D-SUB Series

KLS1-DBF D-SUB Metal Material Hood 09-37Pin Series

Cover Material: Zinc alloy
Screw Material: Steel

Contact Number	A	B	C	D
09	31.40	24.99	44.50	20.00
15	40.20	33.32	45.00	27.90
25	53.00	47.04	45.00	41.50
37	69.20	63.50	45.00	57.80
50	67.00	61.12	45.00	55.55



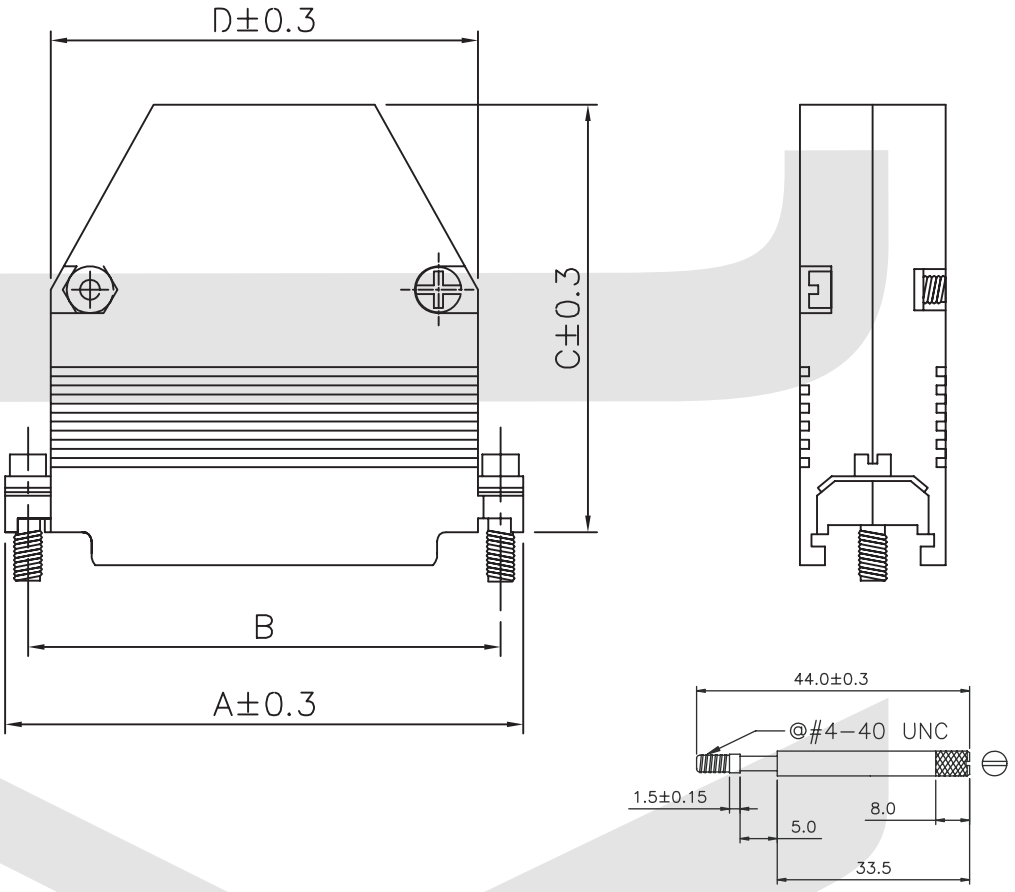

Long screw

ORDER INFORMATION

Product NO.: KLS1-DBF-09P-L

- Pos. NO. 001=001 pos.
- Contact Number of Row
- DBF=D-SUB Metal Material Hood Series
- Number of Contacts
- L : Long screw
- S : Short screw

D-SUB Series

I

KLS1-DBJ D-SUB HOOD Plastic Material (Chromium plated) 09-37Pin

Cover Material: ABS PLASTIC HOOD Chromium plated
Screw Material: STEEL

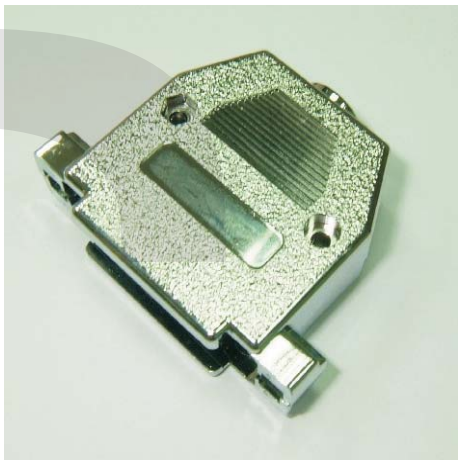

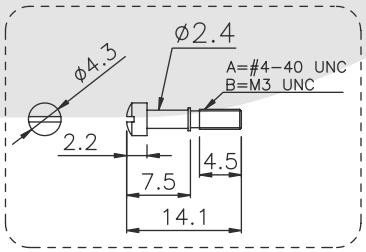

Short screw

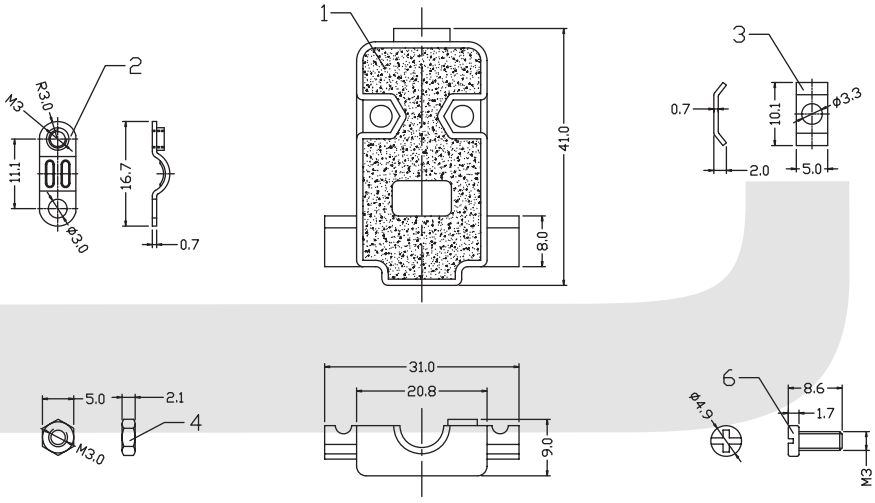

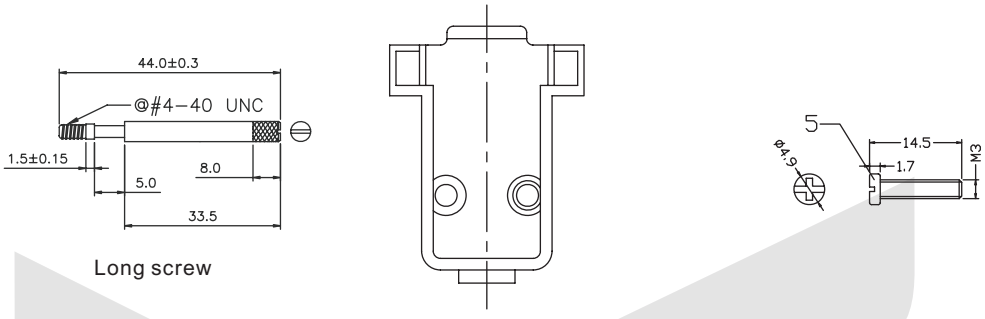

Long screw

ORDER INFORMATION

Product NO.: KLS1-DBJ-09P-L

- Pos. NO. 001=001 pos.
- Contact Number of Row DBJ=D-SUB HOOD Plastic Material (Chromium plated)
- Number of Contacts
- L : Long screw
  S : Short screw

D-SUB Series

I

KLS1-DBJ D-SUB HOOD Plastic Material (Chromium plated) 09-37Pin

Cover Material: ABS PLASTIC HOOD Chromium plated
Screw Material: STEEL

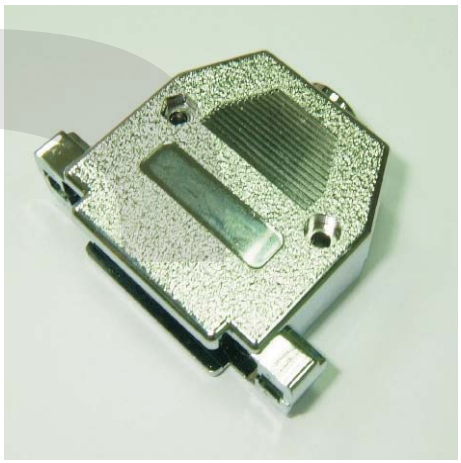

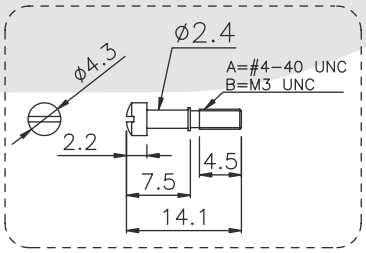

Short screw

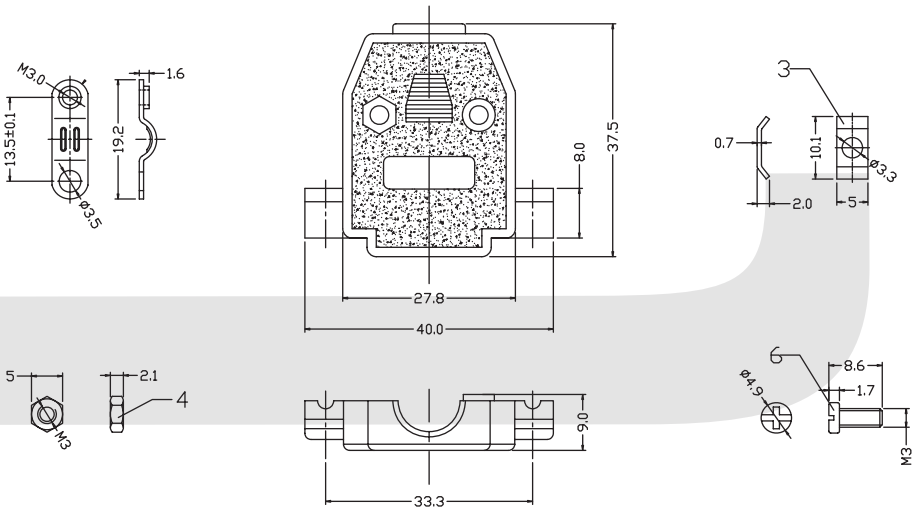

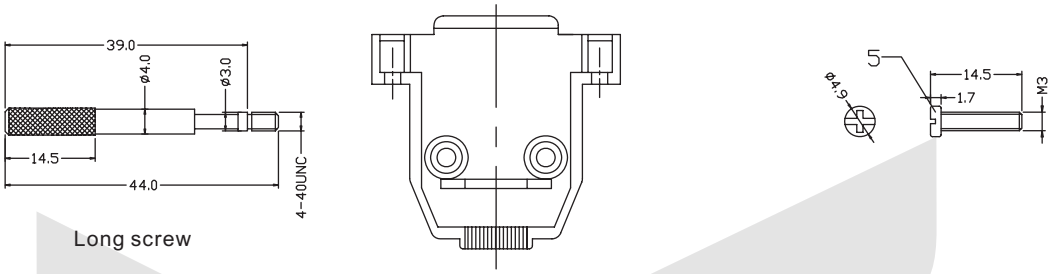

Long screw

ORDER INFORMATION

Product NO.: KLS1-DBJ-15P-L

- Pos. NO. 001=001 pos.
- Contact Number of Row DBJ=D-SUB HOOD Plastic Material (Chromium plated)
- Number of Contacts
- L : Long screw
  S : Short screw

D-SUB Series

I

KLS1-DBJ D-SUB HOOD Plastic Material (Chromium plated) 09-37Pin

Cover Material: ABS PLASTIC HOOD Chromium plated
Screw Material: STEEL

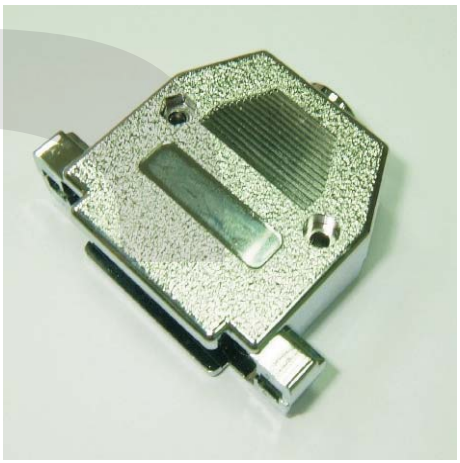

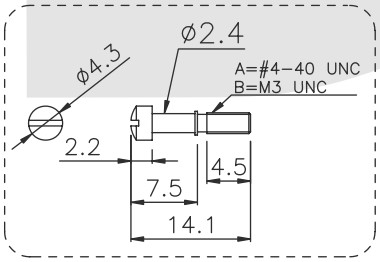

Short screw

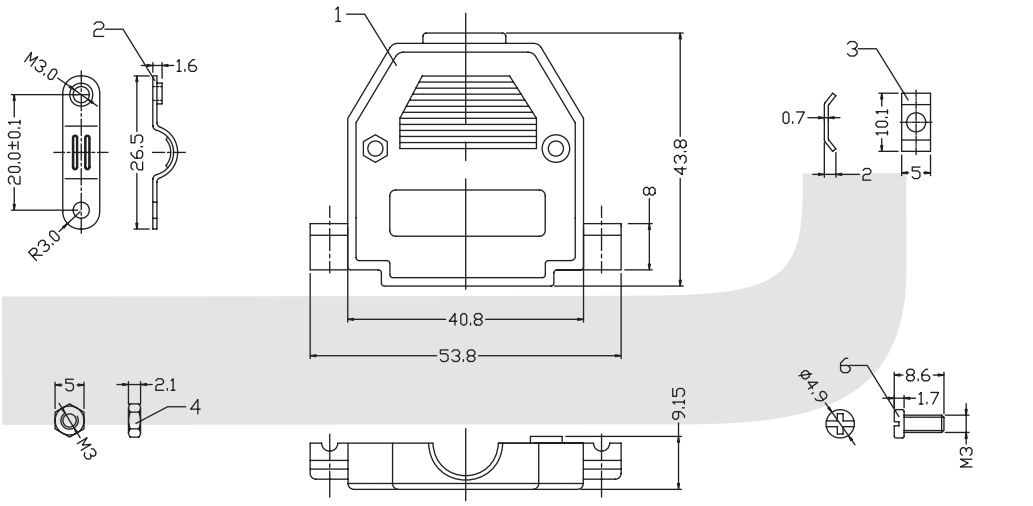

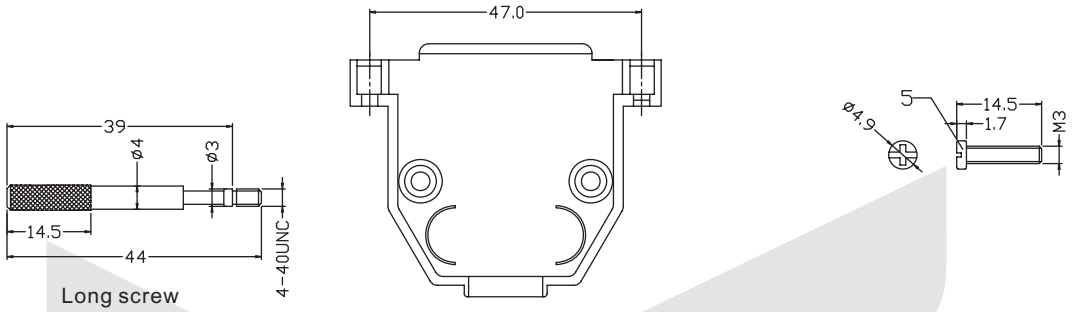

Long screw

ORDER INFORMATION

Product NO.: KLS1-DBJ-25P-L

- Pos. NO. 001=001 pos.
- Contact Number of Row DBJ=D-SUB HOOD Plastic Material (Chromium plated)
- Number of Contacts
- L : Long screw S : Short screw

D-SUB Series

I

KLS1-DBJ D-SUB HOOD Plastic Material (Chromium plated) 09-37Pin

Cover Material: ABS PLASTIC HOOD Chromium plated
Screw Material: STEEL

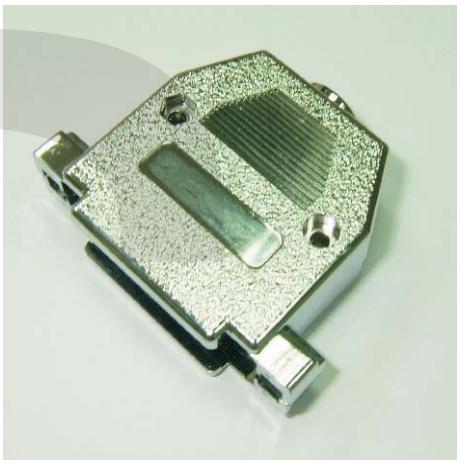

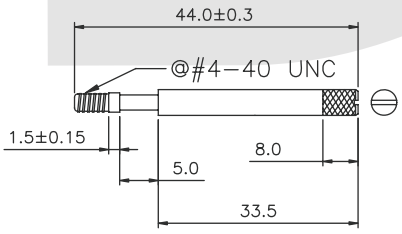

Long screw

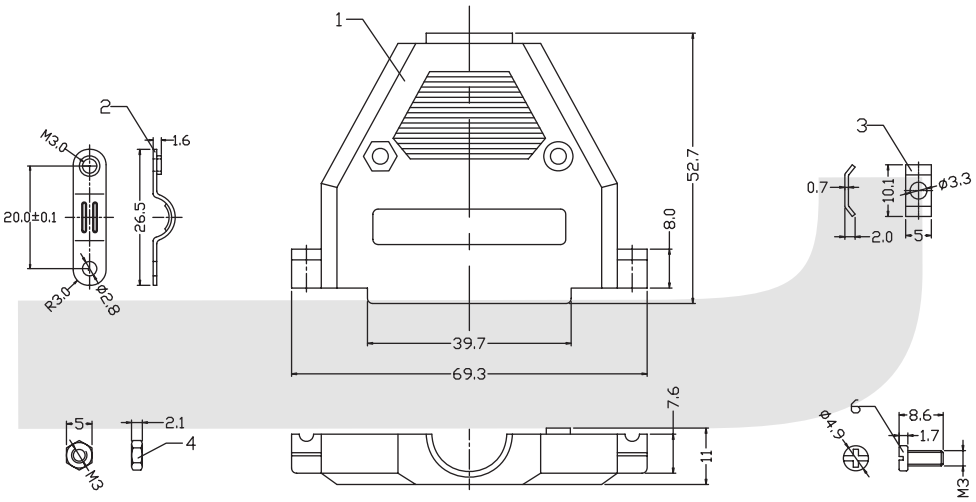

Short screw

ORDER INFORMATION

Product NO.: KLS1-DBJ-37P-L

- Pos. NO. 001=001 pos.
- Contact Number of Row DBJ=D-SUB HOOD Plastic Material (Chromium plated)
- Number of Contacts
- L : Long screw S : Short screw

D-SUB Series

I

KLS1-DBQ D-SUB Gender Changer Plastic Hood Type

Cover Material: ABS UL94HB
Screw Material: Steel



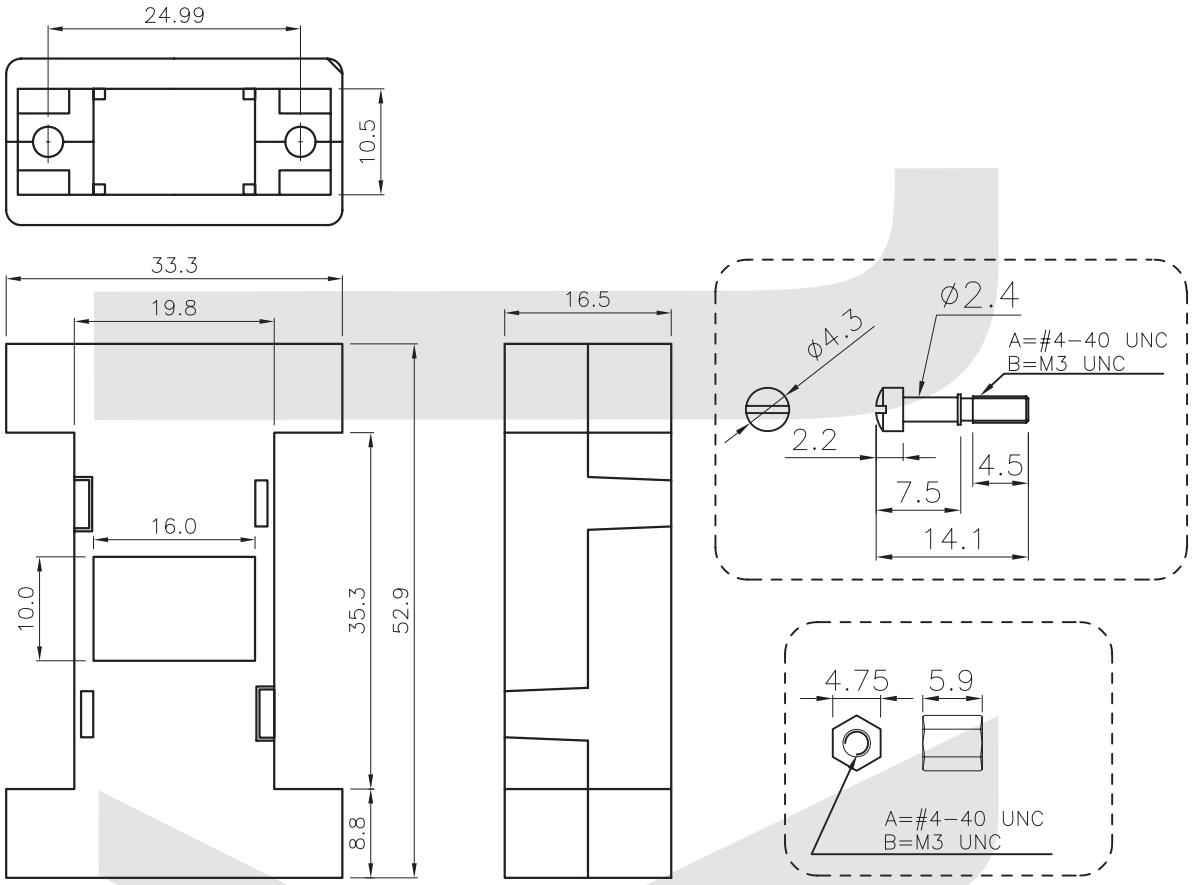

ORDER INFORMATION

Product NO.: KLS1-DBQ-09P/09P-S G

- Pos. NO. 001=001 pos.
- Contact Number of Row
- DBQ=D-SUB Gender Changer Plastic Hood Type
- Number of Contacts
- Color: G-Gray B-Black
- S : Short screw

D-SUB Series

KLS1-DBQ D-SUB Gender Changer Plastic Hood Type

Cover Material: ABS UL94HB
Screw Material: Steel



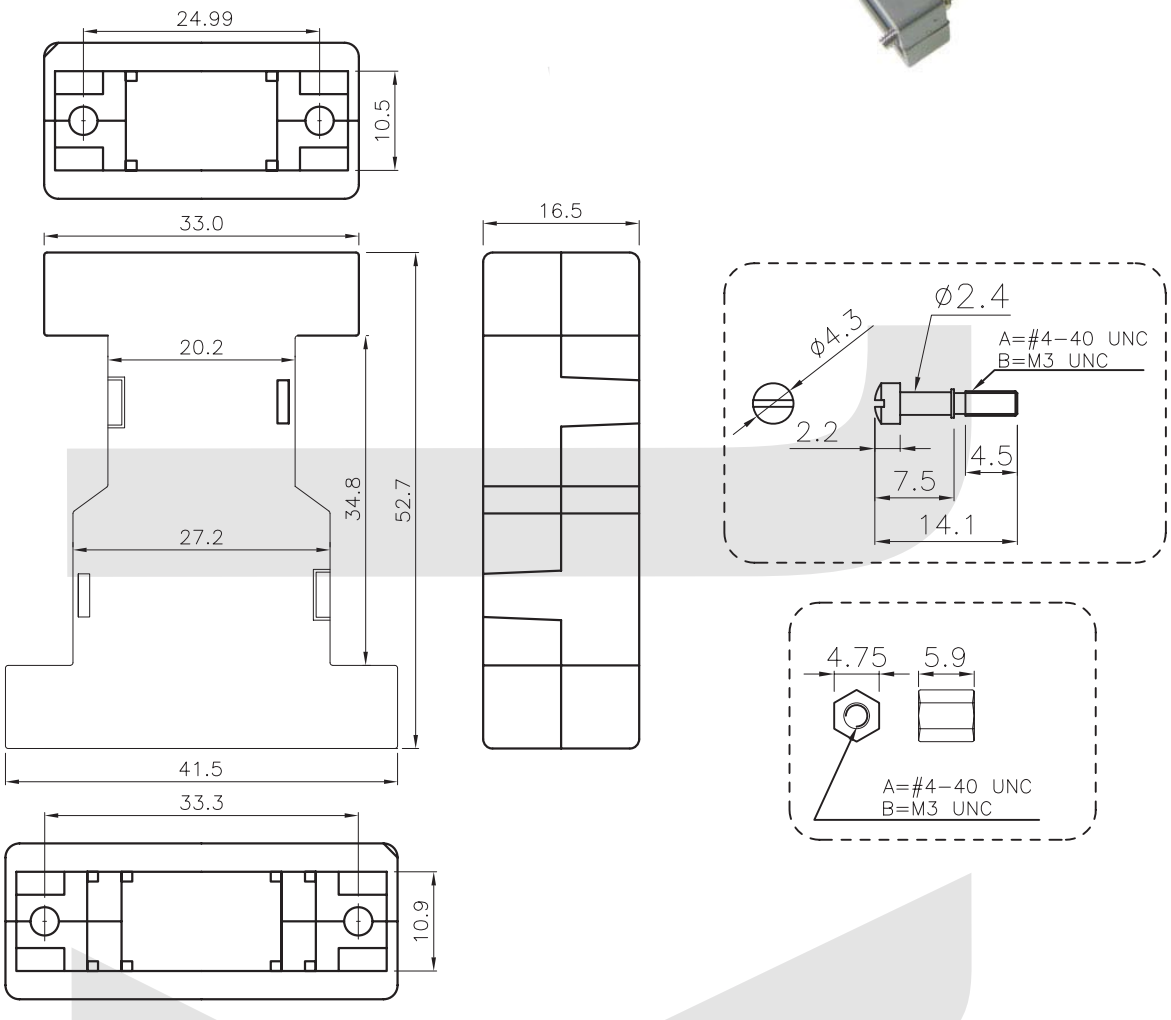

ORDER INFORMATION

Product NO.: KLS1-DBQ-09P/15P-S G

- Pos. NO. 001=001 pos.
- Contact Number of Row DBQ=D-SUB Gender Changer Plastic Hood Type
- Number of Contacts
- S : Short screw
- Color: G-Gray B-Black

D-SUB Series

KLS1-DBQ D-SUB Gender Changer Plastic Hood Type

Cover Material: ABS UL94HB
Screw Material: Steel

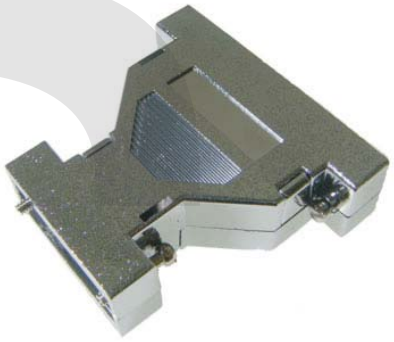

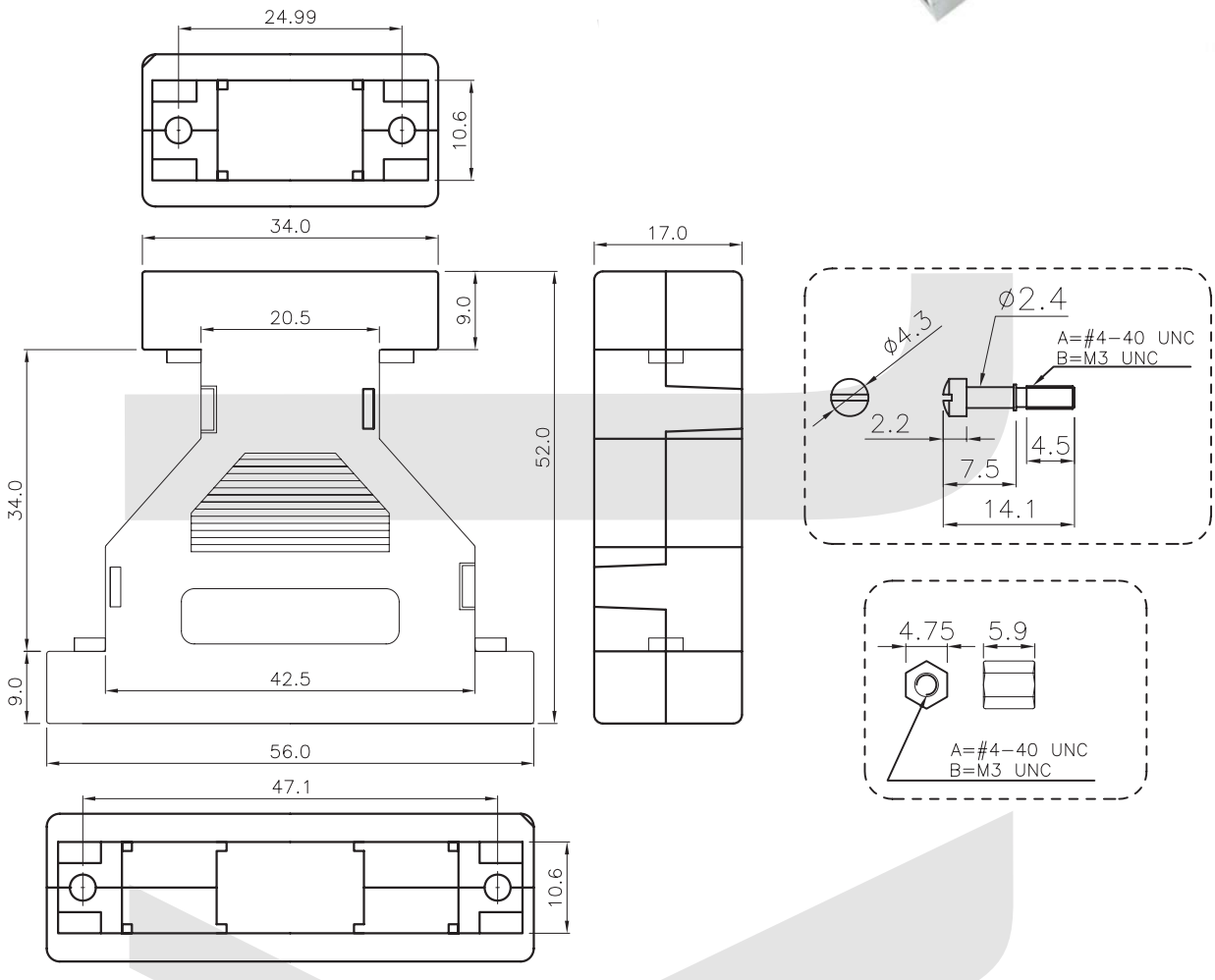

ORDER INFORMATION

Product NO.: KLS1-DBQ-09P/25P-S G

- Pos. NO. 001=001 pos.
- Contact Number of Row
- DBQ=D-SUB Gender Changer Plastic Hood Type
- Number of Contacts
- S : Short screw
- Color: G-Gray B-Black

D-SUB Series

I

KLS1-DBQ D-SUB Gender Changer Plastic Hood Type

Cover Material: ABS UL94HB
Screw Material: Steel



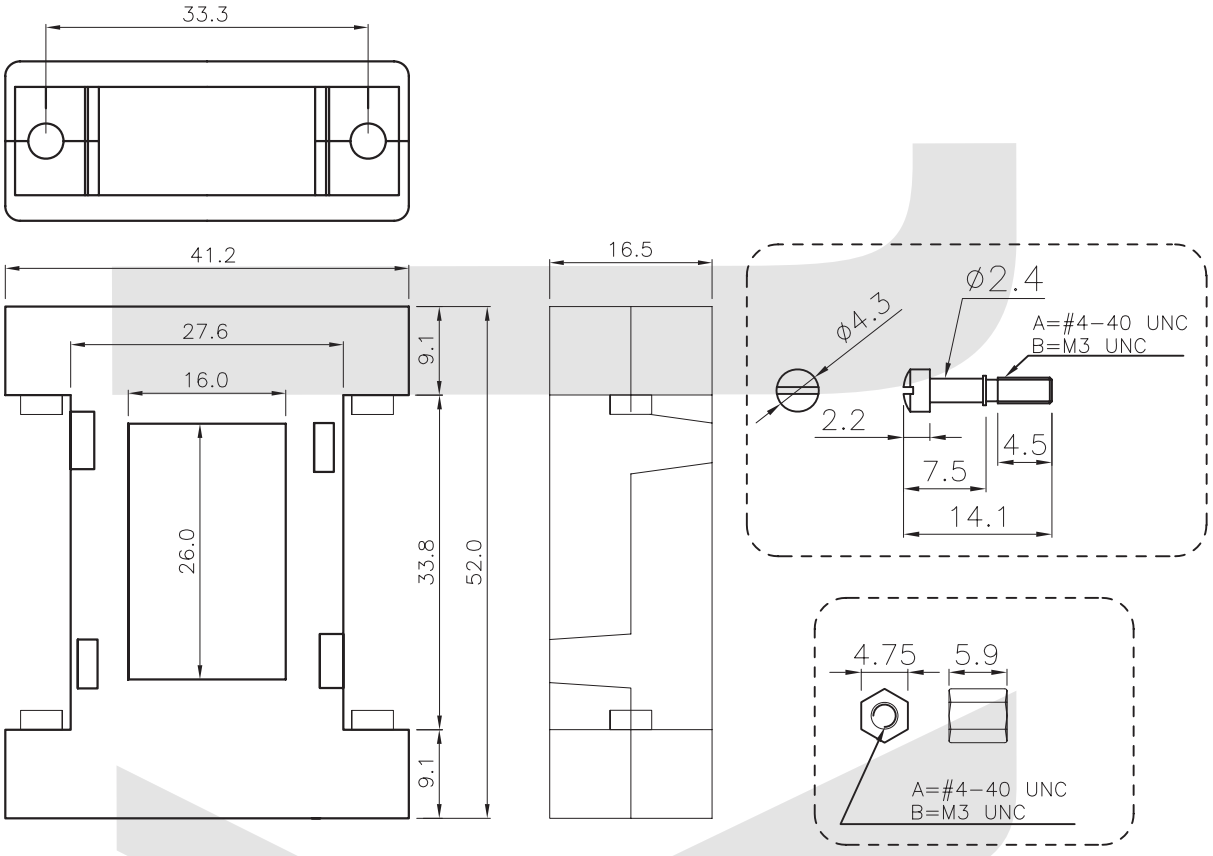

ORDER INFORMATION

Product NO.: KLS1-DBQ-15P/15P-S G

- Pos. NO. 001=001 pos.
- Contact Number of Row
- DBQ=D-SUB Gender Changer Plastic Hood Type
- Number of Contacts
- Color: G-Gray B-Black
- S : Short screw

D-SUB Series

I

KLS1-DBQ D-SUB Gender Changer Plastic Hood Type

Cover Material: ABS UL94HB
Screw Material: Steel



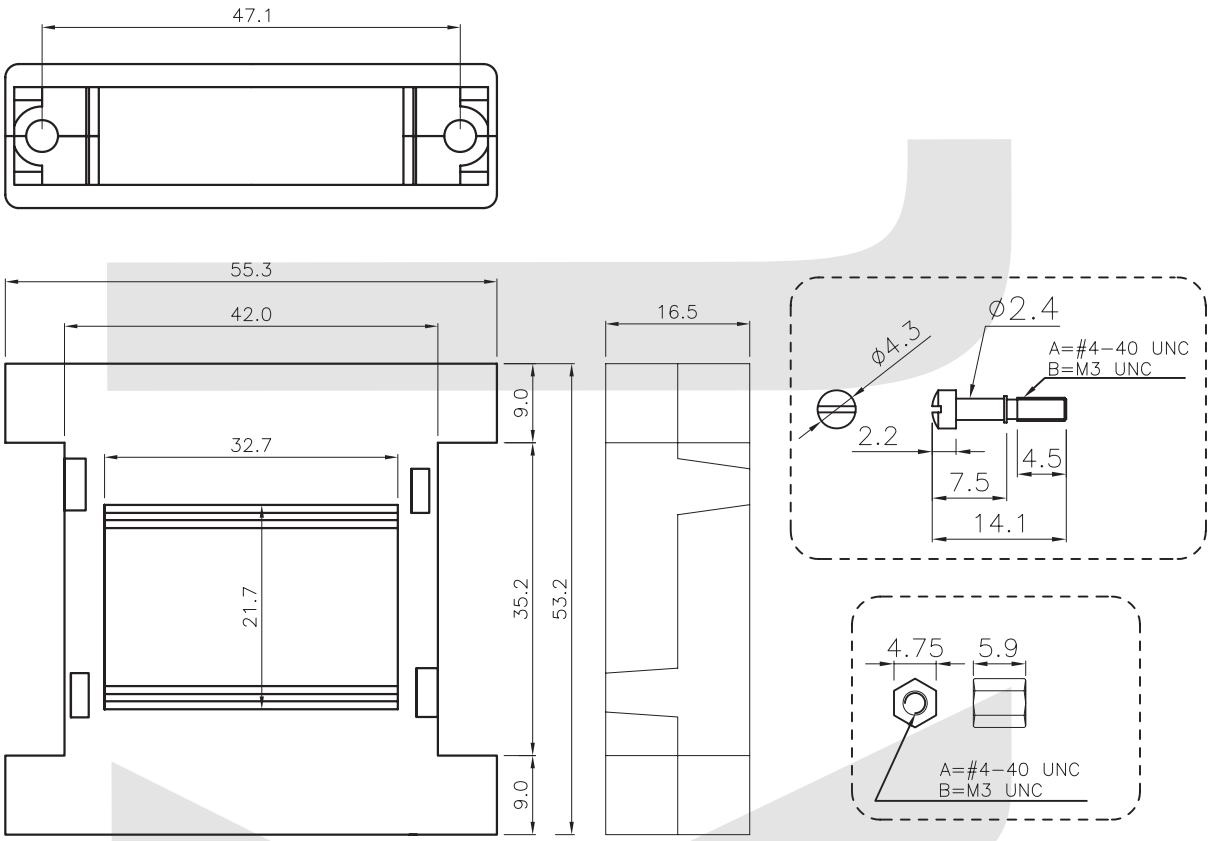

ORDER INFORMATION

Product NO.: KLS1-DBQ-25P/25P-S G

- Pos. NO. 001=001 pos.
- Contact Number of Row
- DBQ=D-SUB Gender Changer Plastic Hood Type
- Number of Contacts
- S : Short screw
- Color: G-Gray B-Black

D-SUB Series

KLS1-DBQ D-SUB Gender Changer Plastic Hood Type

Cover Material: ABS UL94HB
Screw Material: Steel

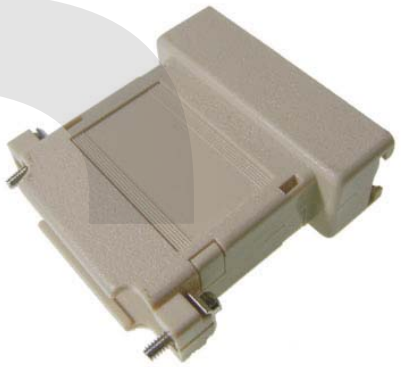

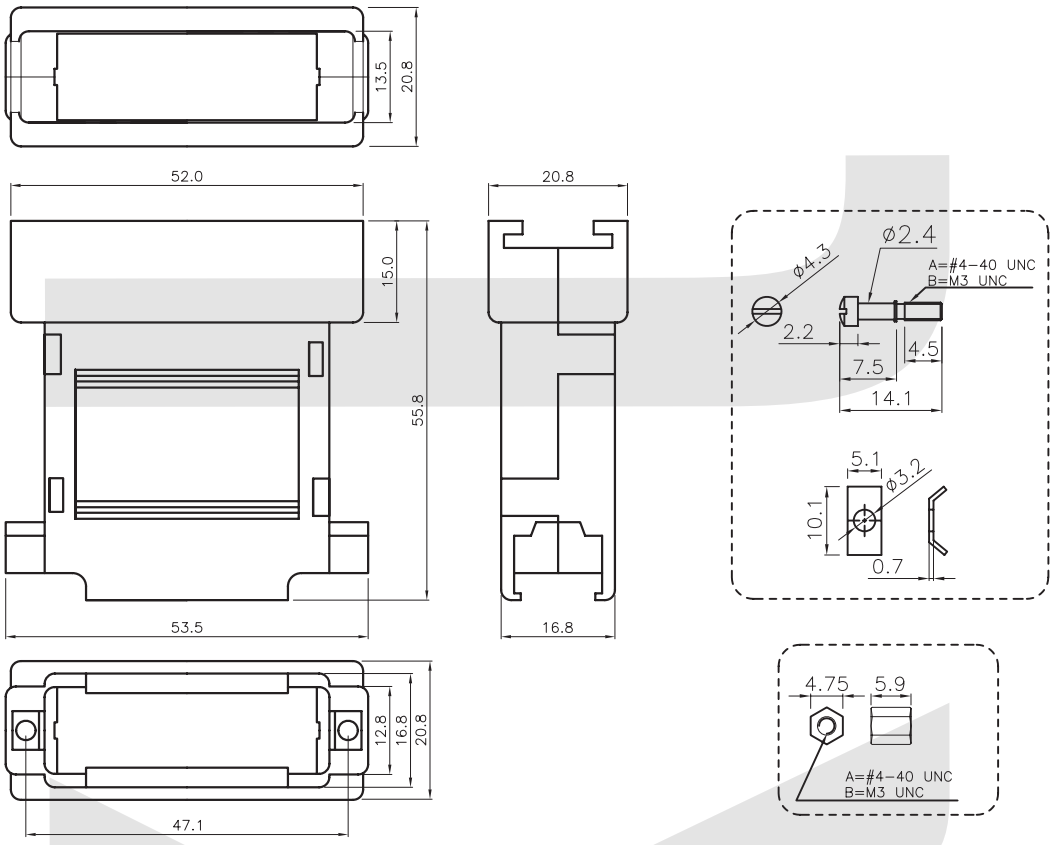

ORDER INFORMATION

Product NO.: KLS1-DBQ-25P/36P-S G

- Pos. NO. 001=001 pos.
- Contact Number of Row
- DBQ=D-SUB Gender Changer Plastic Hood Type
- Number of Contacts
- S : Short screw
- Color: G-Gray B-Black

D-SUB Series

KLS1-DBQ D-SUB Gender Changer Plastic Hood Type

Cover Material: ABS UL94HB
Screw Material: Steel



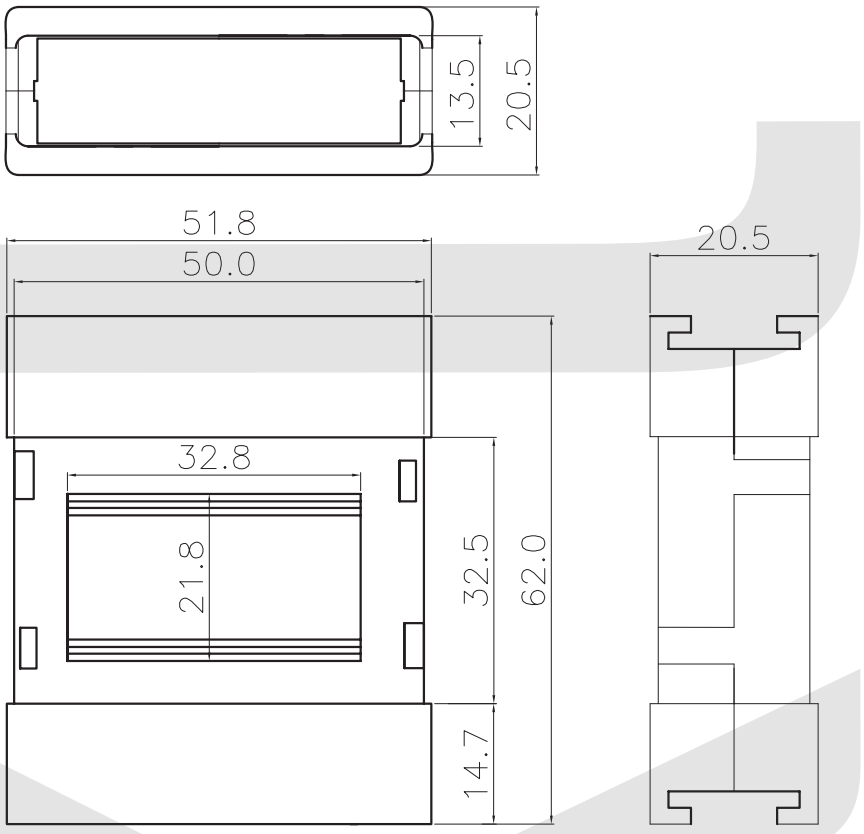

ORDER INFORMATION

Product NO.: KLS1-DBQ-36P/36P-S G

- Pos. NO. 001=001 pos.
- Contact Number of Row
- DBQ=D-SUB Gender Changer Plastic Hood Type
- Number of Contacts
- S : Short screw
- Color: G-Gray B-Black

D-SUB Series

KLS1-DBR D-SUB Metal Material Hood 9-25Pin Series

Cover Material: Zinc alloy
Screw Material: Steel

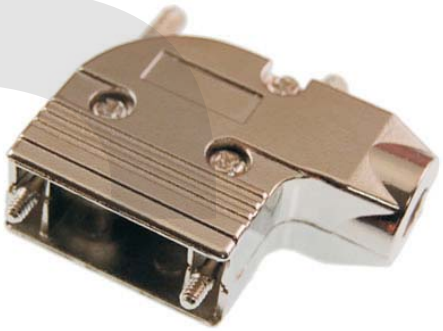

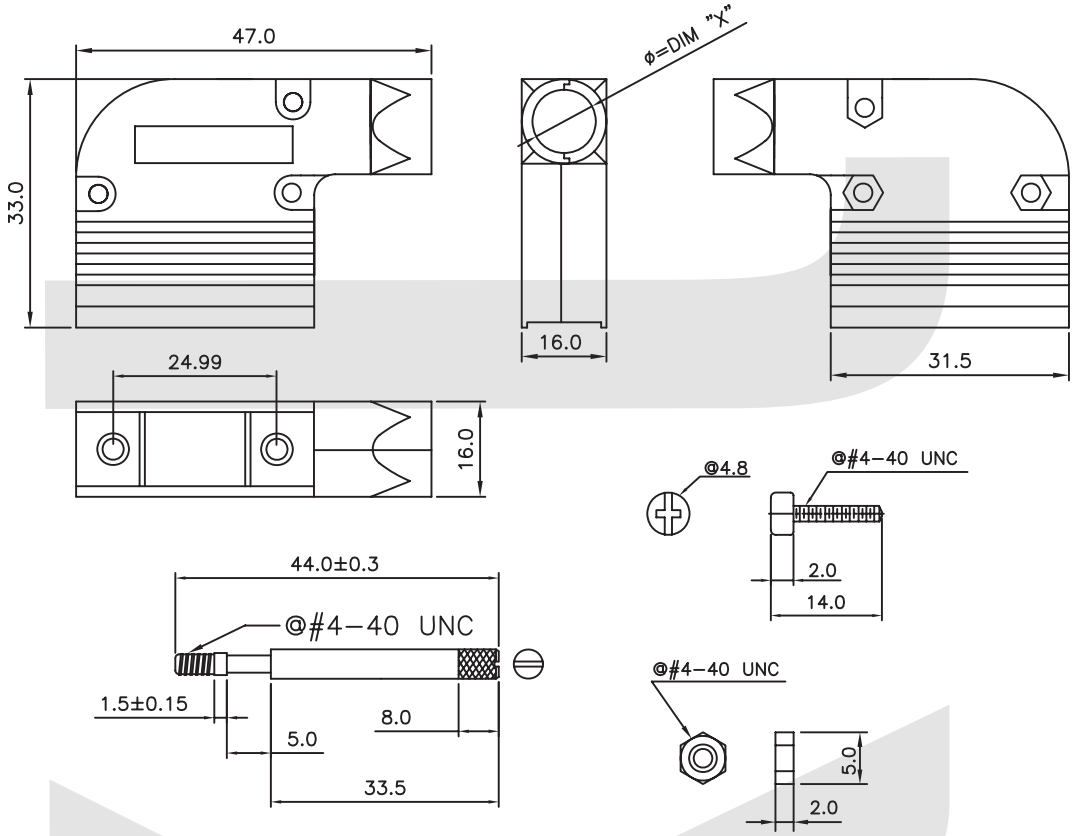

ORDER INFORMATION

Product NO.: KLS1-DBR-09P-L

Pos. NO.
001=001 pos.

Contact Number of Row
DBR=D-SUB Metal Material Hood Series

L : Long screw

Number of Contacts

D-SUB Series

KLS1-DBR D-SUB Metal Material Hood 9-25Pin Series

Cover Material: Zinc alloy
Screw Material: Steel

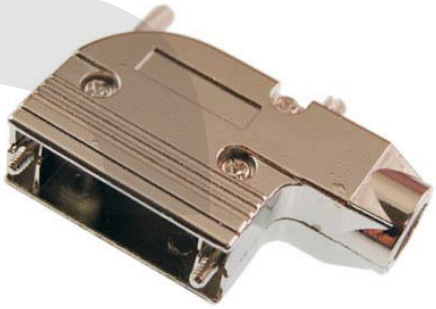

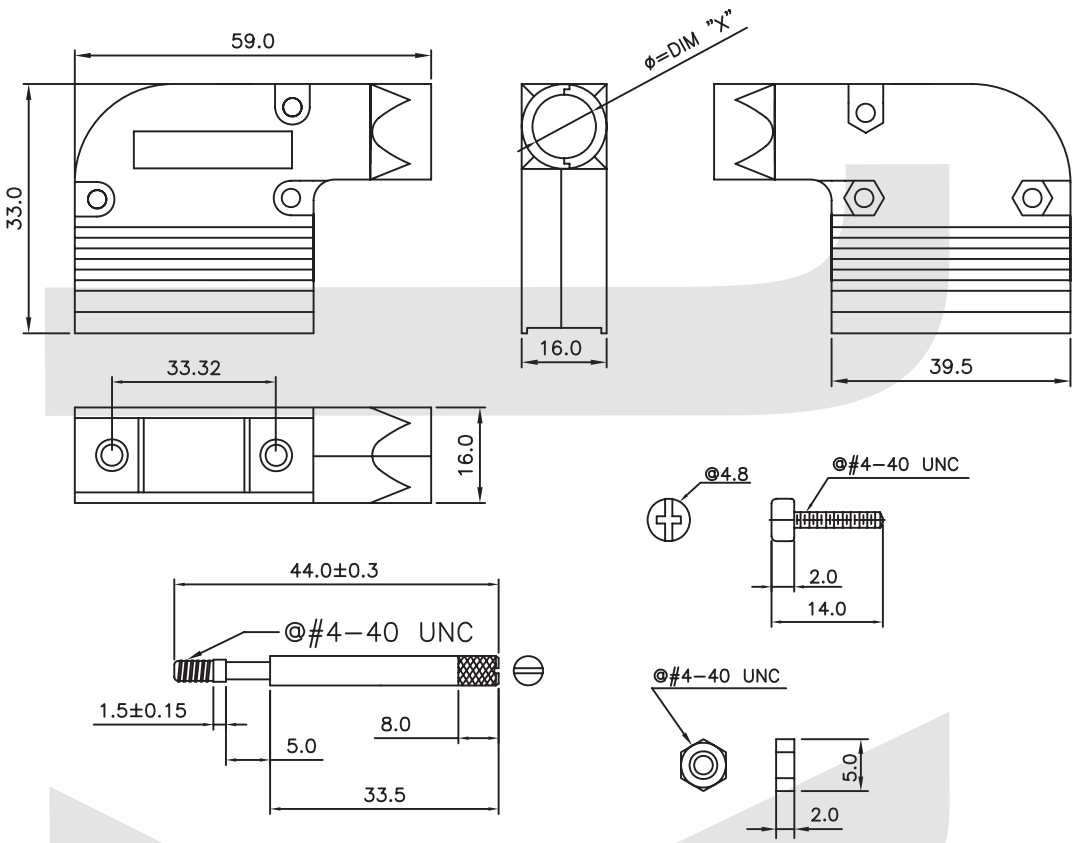

ORDER INFORMATION

Product NO.: KLS1-DBR-15P-L

Pos. NO.
001=001 pos.

Contact Number of Row
DBR=D-SUB Metal Material Hood Series

L : Long screw

Number of Contacts

D-SUB Series

KLS1-DBR D-SUB Metal Material Hood 9-25Pin Series

Cover Material: Zinc alloy
Screw Material: Steel

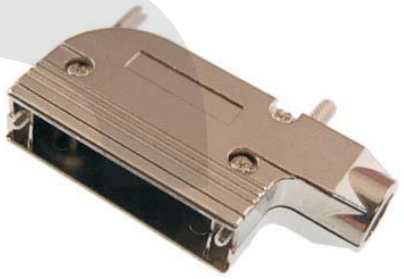

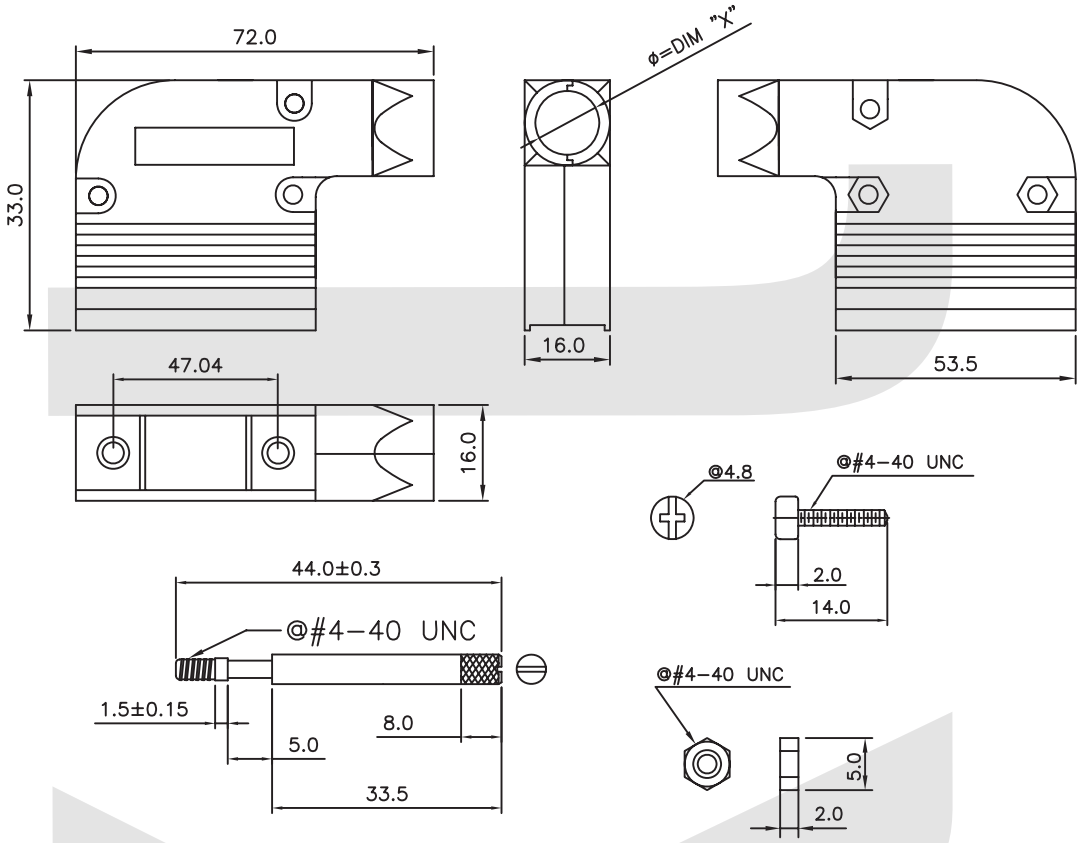

ORDER INFORMATION

Product NO.: KLS1-DBR-25P-L

Pos. NO.
001=001 pos.

Contact Number of Row
DBR=D-SUB Metal Material Hood Series

L : Long screw

Number of Contacts

D-SUB Series

KLS1-DBR D-SUB Metal Material Hood 37Pin Series

Cover Material: Zinc alloy
Screw Material: Steel

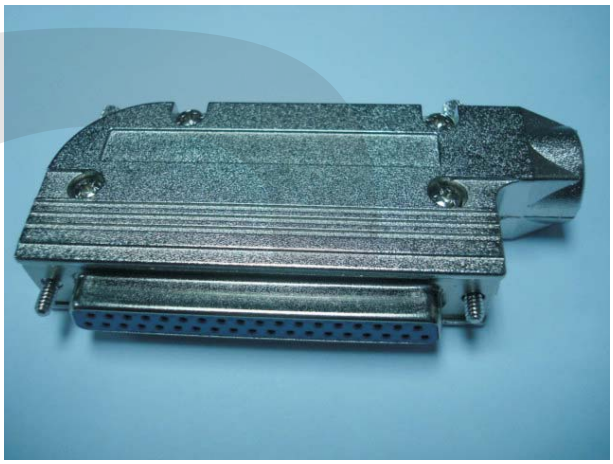

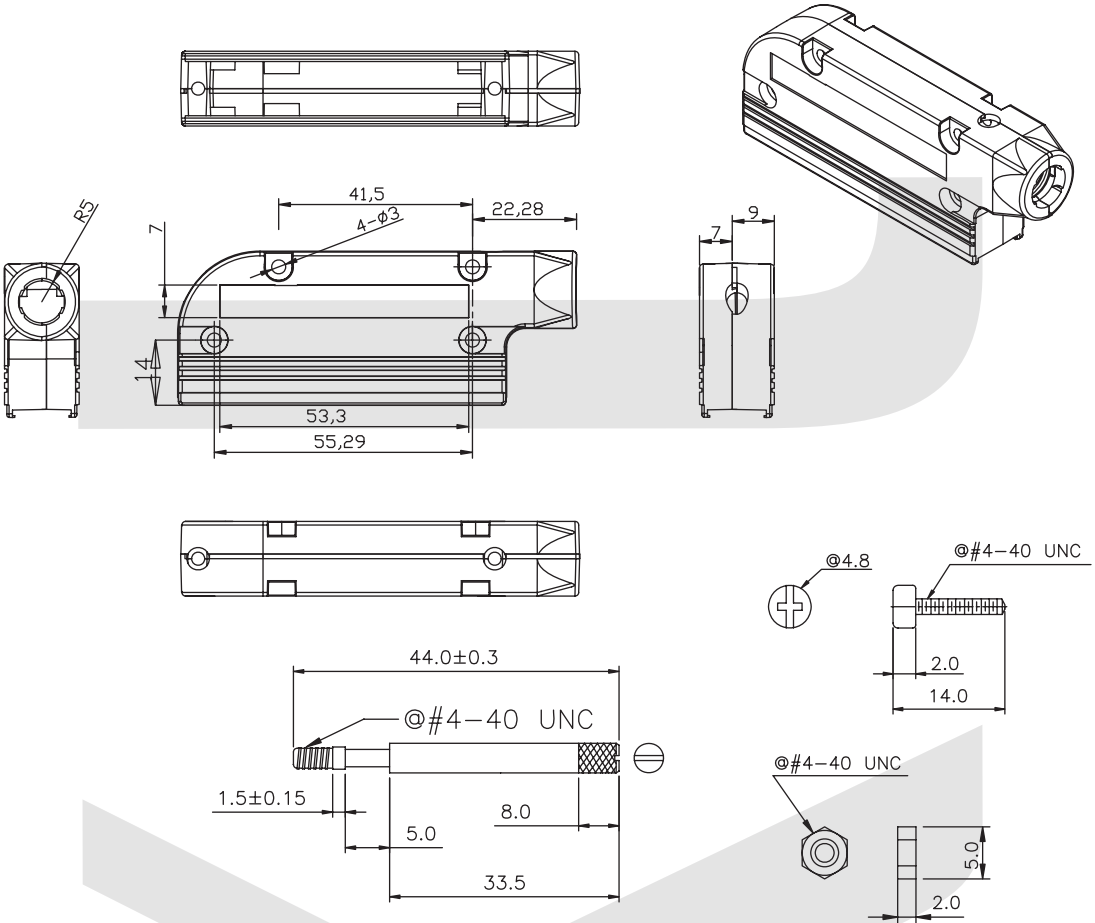

ORDER INFORMATION

Product NO.: KLS1-DBR-37P-L

- Pos. NO. 001=001 pos.
- Contact Number of Row
- DBR=D-SUB Metal Material Hood Series
- Number of Contacts
- L : Long screw

D-SUB Series

KLS1-DBW Plastic Hood With Lock Type

Cover Material: ABS UL94HB
Screw Material: Steel

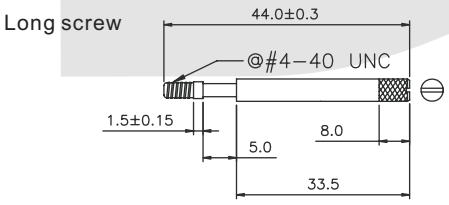



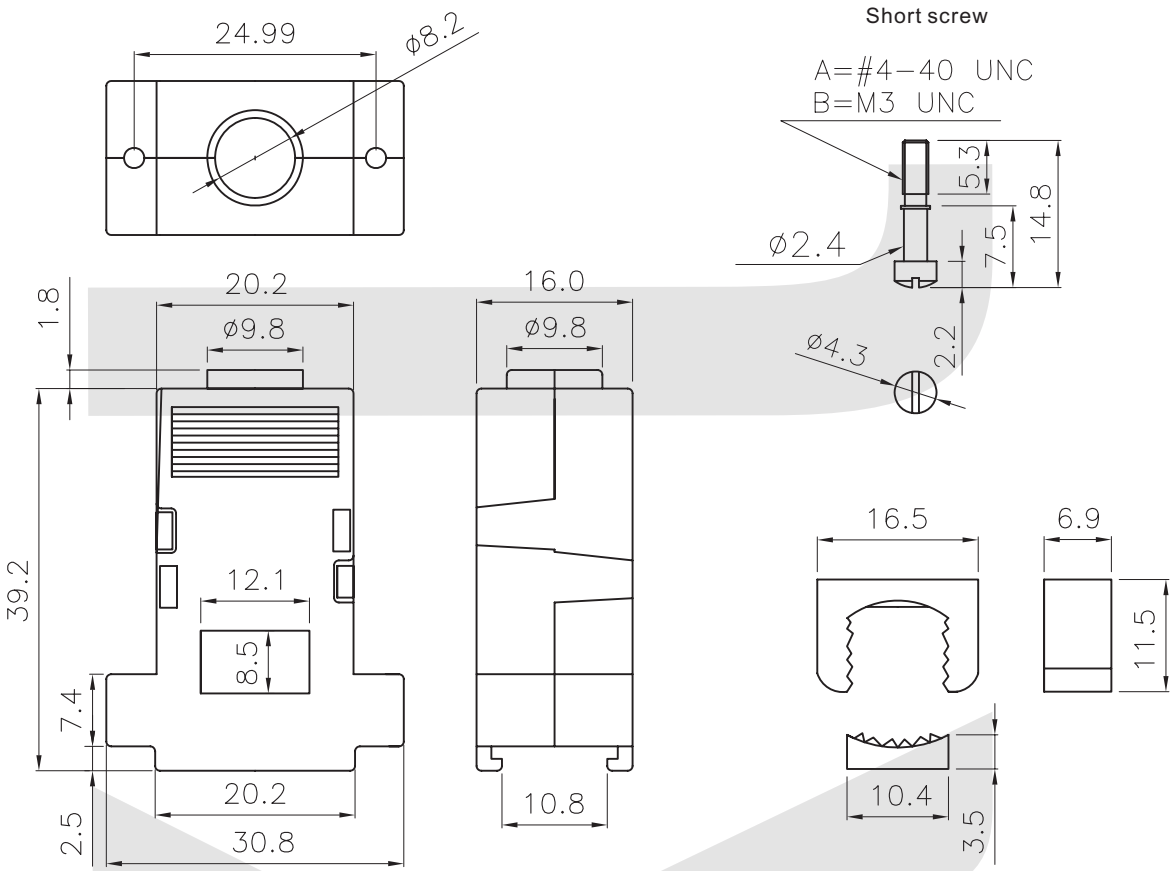

ORDER INFORMATION

Product NO.: KLS1-DBW-09P-L G

- Pos. NO. 001=001 pos.
- Contact Number of Row
- DBW=D-SUB Plastic Hood With Lock Type
- Number of Contacts
- L : Long screw
- S : Short screw
- Color: G-Gray I-Ivory

D-SUB Series

KLS1-DBW Plastic Hood With Lock Type

Cover Material: ABS UL94HB
Screw Material: Steel



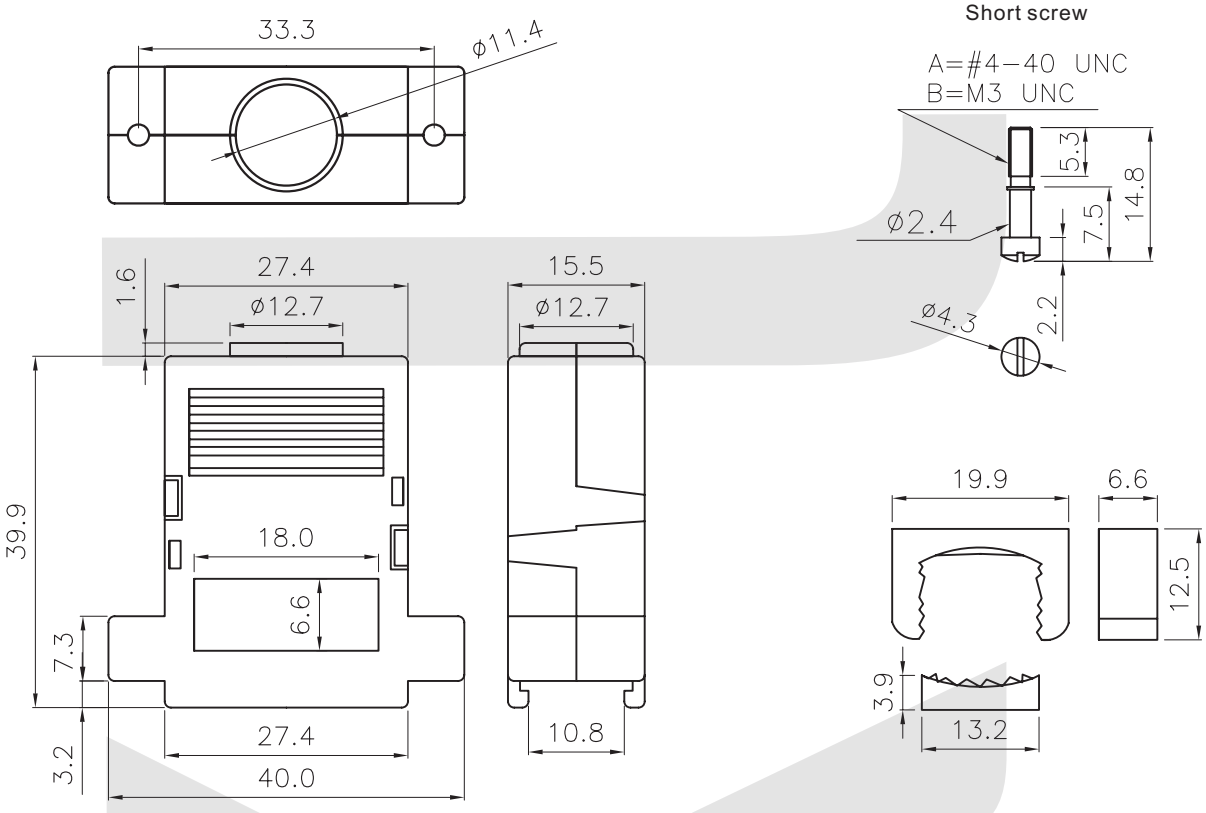

ORDER INFORMATION

Product NO.: KLS1-DBW-15P-L G

- Pos. NO. 001=001 pos.
- Contact Number of Row
- DBW=D-SUB Plastic Hood With Lock Type
- Number of Contacts
- L : Long screw
- S : Short screw
- Color: G-Gray I-Ivory

D-SUB Series

KLS1-DBW Plastic Hood With Lock Type

Cover Material: ABS UL94HB
Screw Material: Steel

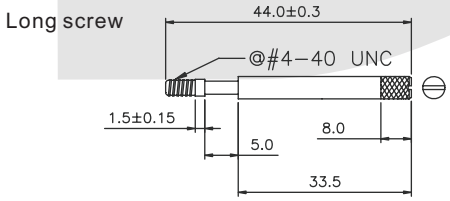



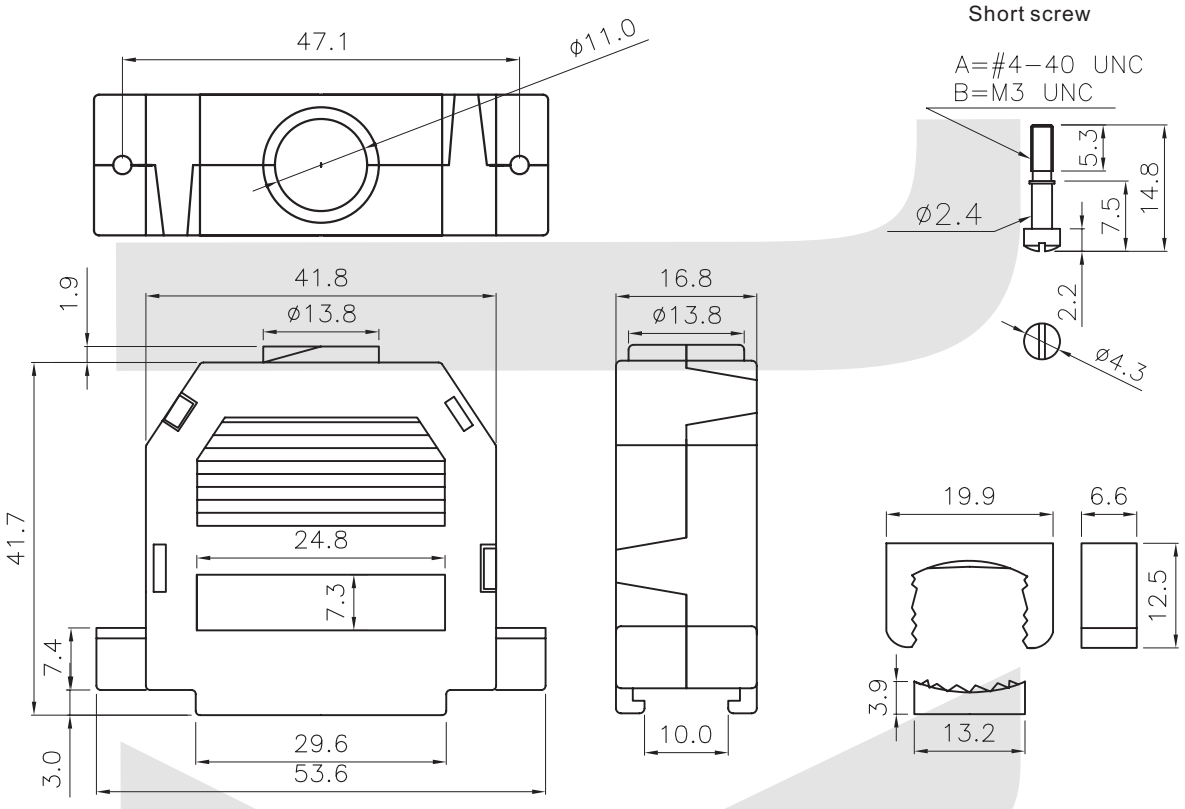

ORDER INFORMATION

Product NO.: KLS1-DBW-25P-L G

- Pos. NO. 001=001 pos.
- Contact Number of Row
- DBW=D-SUB Plastic Hood With Lock Type
- Number of Contacts
- L : Long screw
- S : Short screw
- Color: G-Gray I-Ivory

D-SUB Series

KLS1-4-40UNC D-SUB Screw Type

Material:
Screw : Brass
Washer:Steel
NUT:Steel

* SCREW LOCK, # 4-40, EMI / RFI D CONNECTOR
* Accessory Type: Screw Lock
* For Use With: EMI / RFI Shielded D Connectors
* Thread Size - Imperial: # 4-40 UNC

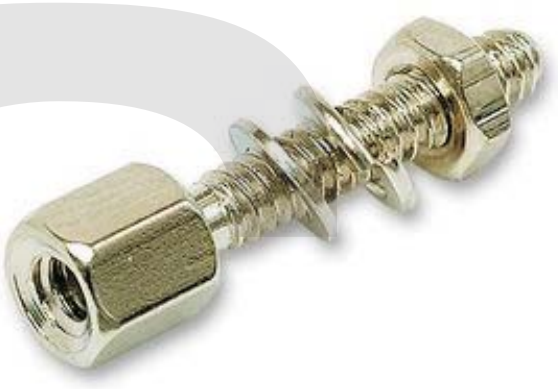

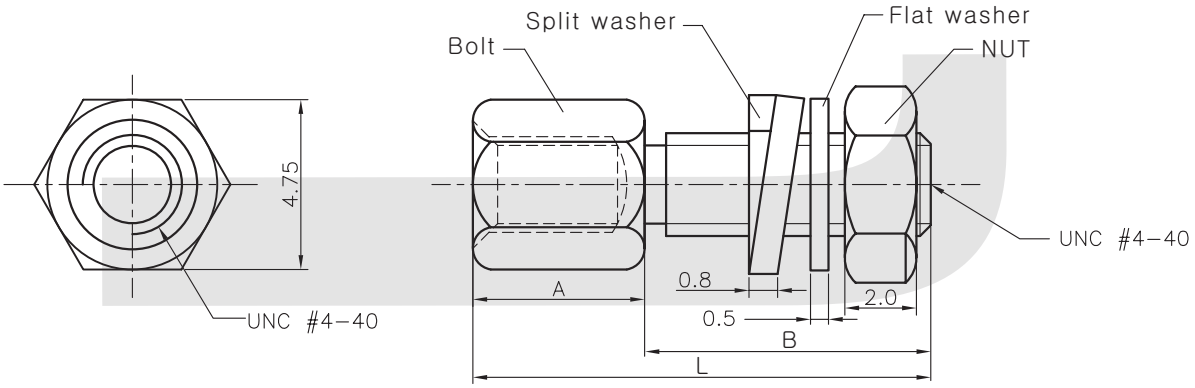

ITEM	L(mm)	A(mm)	B(mm)
KLS1-4-40UNC-10.0	10.0	4.8	5.2
KLS1-4-40UNC-11.8	11.8	4.8	7.0
KLS1-4-40UNC-12.7	12.7	4.8	7.9
KLS1-4-40UNC-15.7	15.7	4.8	10.9
KLS1-4-40UNC-17.8	17.8	4.8	13.0
KLS1-4-40UNC-18.8	18.8	4.8	14.0

ORDER INFORMATION

Product NO.: KLS1-4-40UNC-12.7

Contact Number of Row
4-40UNC=D-SUB Screw Type

Size: 10.0mm / 12.0mm
/ 12.7mm / 15.7mm
/ 17.8mm / 18.8mm

D-SUB Series

KLS1-179-57A Centronic Connector Series

Material:

1. Insulator: High temperature thermoplastic with g.f, UL94v-0
2. Contact: Copper alloy, t = 0.25mm
3. Shell: Spcc, t = 0.40mm, 50P Front-shell t = 0.60mm



Specification:

1. Current rating: 1 A Max.
2. Dielectric withstanding voltage: 750 V (ac) for 1 min.
3. Contact resistance: 30 mΩ Max.
4. Insulation resistance: 1000 MΩ Min.
5. Total mating force: 9.0 Kgf Max.
6. Total unmating force: 5.0 Kgf Min.
7. Temperature range: -55 °C ~ 105 °C

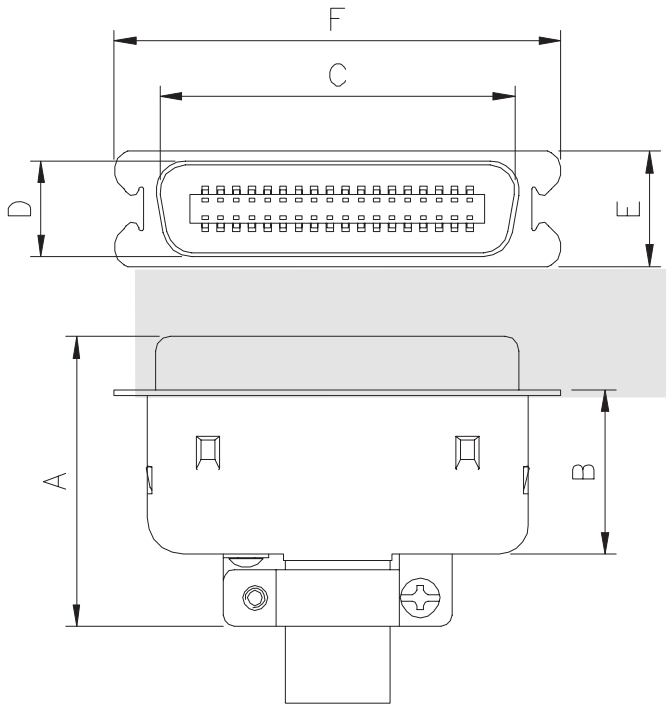

PIN	A±0.2	B±0.2	C±0.2	D±0.13	E±0.2	F±0.2
14P	41.4	21.2	25.5	12.25	15.3	38.0
24P	41.0	21.2	36.4	12.25	15.3	48.8
36P	42.4	22.6	49.3	12.25	15.3	62.0
50P	45.0	24.8	64.4	12.25	15.3	77.0

Male (With Straight Metal cover)

ORDER INFORMATION

Product NO.: KLS1-179-57A-XX -M -L

- Pos. NO. 001=001 pos.
- Contact Number of Row 179-57A=Centronic connector Series
- Number of Contacts
- L=Blue B=Black
- M=Male F=Female

I

D-SUB Series

KLS1-179-57A Centronic Connector Series

Material:

1. Insulator: High temperature thermoplastic with g.f, UL94v-0
2. Contact: Copper alloy, t = 0.25mm
3. Shell: Spcc, t = 0.40mm, 50P Front-shell t = 0.60mm



Specification:

1. Current rating: 1 A Max.
2. Dielectric withstanding voltage: 750 V (ac) for 1 min.
3. Contact resistance: 30 mΩ Max.
4. Insulation resistance: 1000 MΩ Min.
5. Total mating force: 9.0 Kgf Max.
6. Total unmating force: 5.0 Kgf Min.
7. Temperature range: -55 °C ~ 105 °C

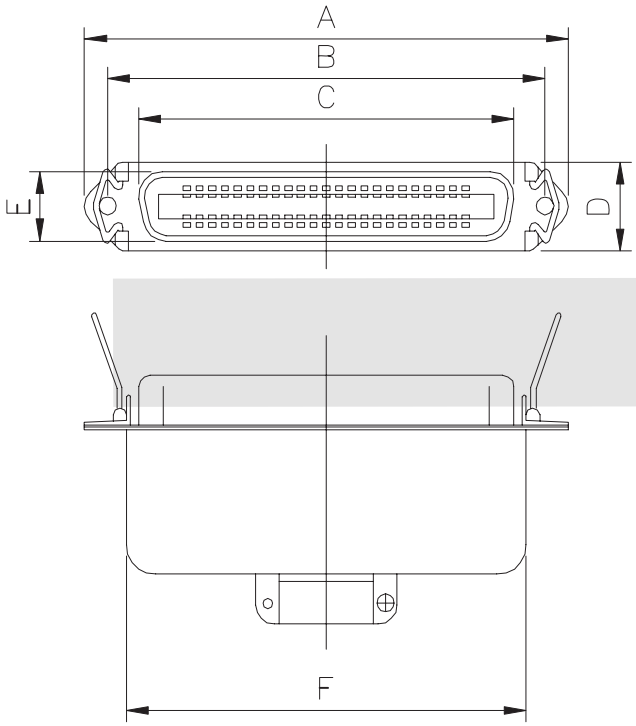

PIN	A±0.2	B±0.2	C±0.2	D±0.03	E±0.2	F±0.2
14S	43.92	35.99	25.2	12.25	11.9	29.0
24S	54.71	46.79	36.0	12.25	11.9	39.8
36S	67.69	59.74	48.9	12.25	11.9	53.0
50S	82.78	74.85	64.0	12.25	11.9	68.1

Female (With Straight Metal cover)

ORDER INFORMATION

Product NO.: KLS1-179-57A-XX - F -L

- Pos. NO. 001=001 pos.
- Contact Number of Row 179-57A=Centronic connector Series
- Number of Contacts
- L=Blue B=Black
- M=Male F=Female

D-SUB Series

KLS1-180-57B Centronic Connector Solder Series

Material:
Housing: 30% Glass filled PBT UL94V-0
Contacts: Brass or Phosphor Bronze
Shell: Steel, 100u "Tin Over 50u" min Nickel
Clinch Nut: Brass, 100u "min Nickel Plated
Screwlock: Brass, 100u "min Nickel Plated

Electrical Characteristics:
Current Rating: 3AMP or 5 AMP
Insulator Resistance: 1000M ohms min. At DC 500V
Contact Resistance: 25m ohms max. At DC 100mA
Operating Temperature: -55°C ~ 105°C



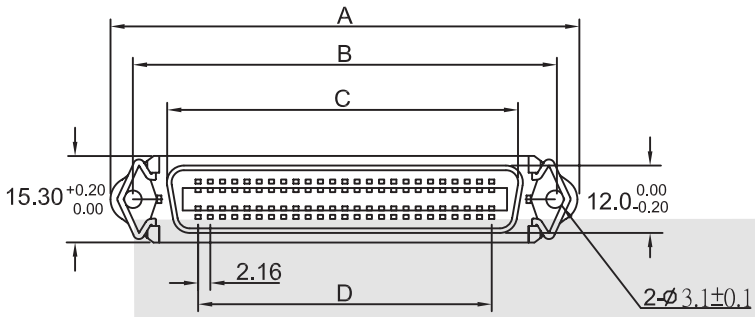

PART NO.	A±0.25	B±0.2	C±0.2	D±0.1	E±0.2
14	43.92	35.99	25.2	12.96	
24	54.71	46.79	36.0	23.76	
36	67.69	59.74	48.9	36.72	55.05
50	82.78	74.85	64.0	51.84	70.16

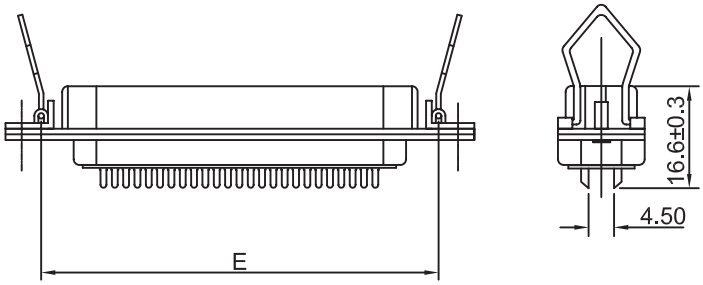

ORDER INFORMATION

Product NO.: KLS1-180-57B-XX - F -L

Pos. NO.
001=001 pos.
Contact Number of Row
180-57B=Centronic Connector Solder Series
Number of Contacts
L=Blue B=Black
F=Female

D-SUB Series

KLS1-180-57B Centronic Connector Solder Series

Material:
Housing: 30% Glass filled PBT UL94V-0
Contacts: Brass or Phosphor Bronze
Shell: Steel, 100u "Tin Over 50u" min Nickel
Clinch Nut: Brass, 100u "min Nickel Plated
Screwlock: Brass, 100u "min Nickel Plated

Electrical Characteristics:
Current Rating: 3AMP or 5 AMP
Insulator Resistance: 1000M ohms min. At DC 500V
Contact Resistance: 25m ohms max. At DC 100mA
Operating Temperature: -55°C ~ 105°C



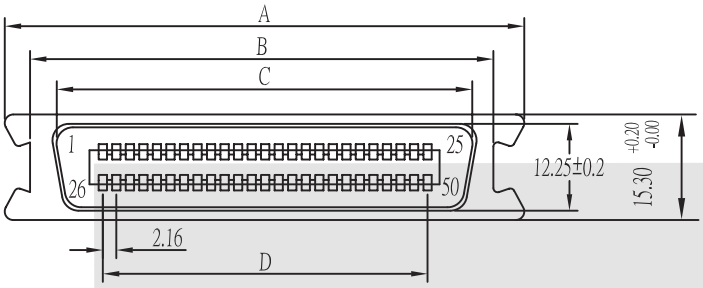

PART NO.	A±0.25	B±0.2	C±0.2	D±0.1
14	38.8	30.2	25.60	12.96
24	49.3	40.2	36.47	23.76
36	62.0	53.5	49.35	36.72
50	77.4	68.3	64.47	51.84

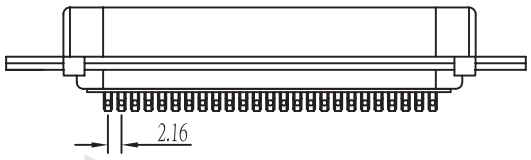

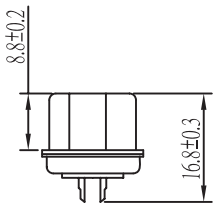

ORDER INFORMATION

Product NO.: KLS1-180-57B-XX -M -L

Pos. NO.
001=001 pos.
Contact Number of Row
180-57B=Centronic Connector Solder Series
Number of Contacts
L=Blue B=Black
M=Male

D-SUB Series

KLS1-181-57A Centronic Connector PCB Straight Series

Material:
Housing: 30% Glass filled PBT UL94V-0
Contacts: Brass or Phosphor Bronze
Shell: Steel, 100u "Tin Over 50u" min Nickel
Clinch Nut: Brass, 100u "min Nickel Plated
Screwlock: Brass, 100u "min Nickel Plated

Electrical Characteristics:
Current Rating: 3AMP or 5 AMP
Insulator Resistance: 1000M ohms min. At DC 500V
Contact Resistance: 25m ohms max. At DC 100mA
Operating Temperature: -55°C ~ 105°C



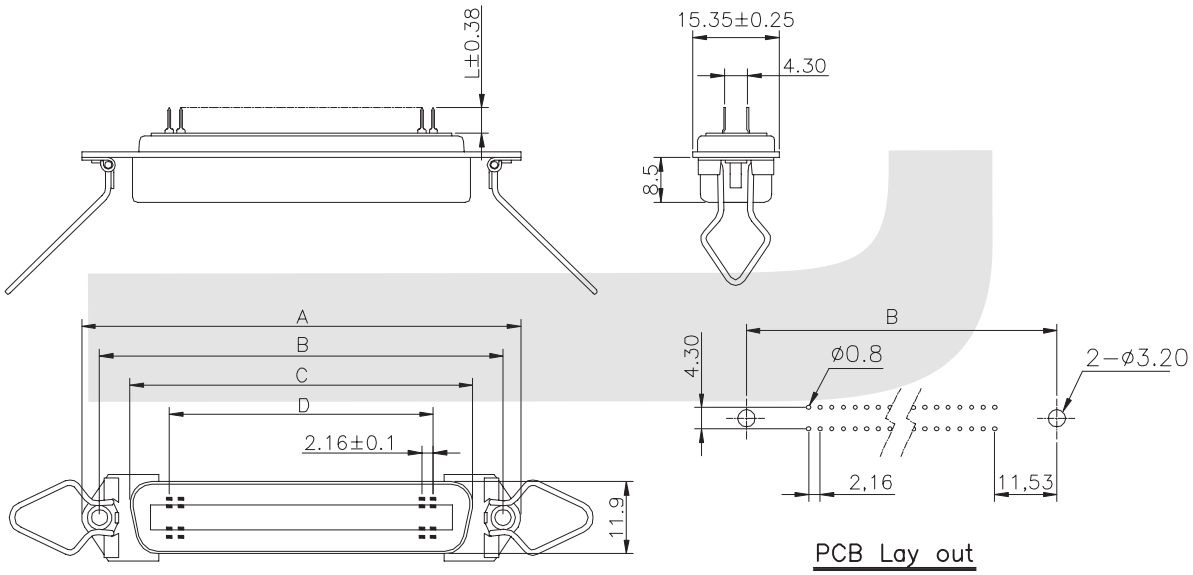

PCB Lay out

Positions	A	B	C	D	L
14	44.1	36.0	25.2	12.96	4.9
24	54.9	46.8	36.0	23.76	4.9
36	67.9	59.7	48.9	36.72	4.9
50	83.0	74.9	64.1	51.84	4.9

ORDER INFORMATION

Product NO.: KLS1-181-57A-XX - F -L

Pos. NO.
001=001 pos.
Contact Number of Row
181-57A=Centronic Connector PCB Straight Series
Number of Contacts
F=Female
L=Blue B=Black

D-SUB Series

KLS1-181-57A Centronic Connector PCB Straight Series

Material:
Housing: 30% Glass filled PBT UL94V-0
Contacts: Brass or Phosphor Bronze
Shell: Steel, 100u "Tin Over 50u" min Nickel
Clinch Nut: Brass, 100u "min Nickel Plated
Screwlock: Brass, 100u "min Nickel Plated

Electrical Characteristics:
Current Rating: 3AMP or 5 AMP
Insulator Resistance: 1000M ohms min. At DC 500V
Contact Resistance: 25m ohms max. At DC 100mA
Operating Temperature: -55°C ~ 105°C

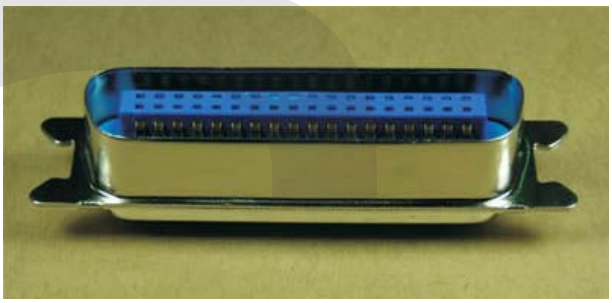

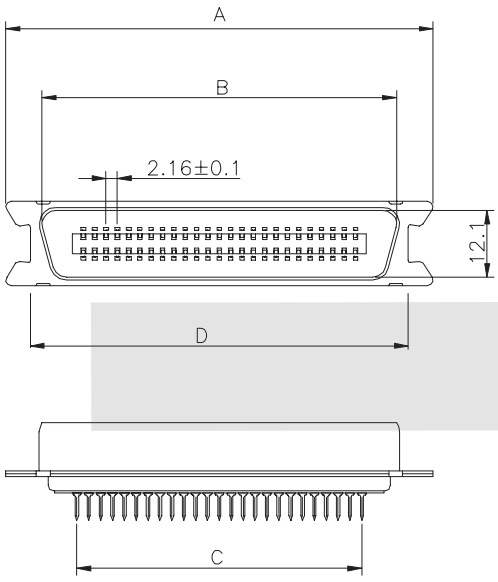

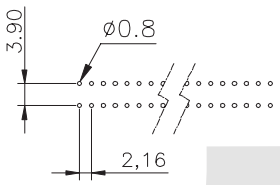

PCB Lay out

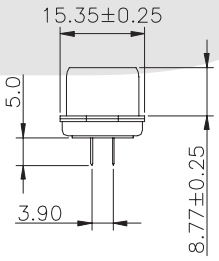

Positions	A	B	C	D
14	36.0	25.6	12.96	30.2
24	46.8	36.3	23.76	40.2
36	59.7	49.3	36.72	53.5
50	74.9	64.4	51.84	68.3

ORDER INFORMATION

Product NO.: KLS1-181-57A-XX -M -L

Pos. NO.
001=001 pos.
Contact Number of Row
181-57A=Centronic Connector PCB Straight Series
Number of Contacts
L=Blue B=Black
M=Male

D-SUB Series

KLS1-181-57B Centronic Connector PCB Straight Series

Material:
Housing: 30% Glass filled PBT UL94V-0
Contacts: Brass or Phosphor Bronze
Shell: Steel, 100u "Tin Over 50u" min Nickel
Clinch Nut: Brass, 100u "min Nickel Plated
Screwlock: Brass, 100u "min Nickel Plated

Electrical Characteristics:
Current Rating: 3AMP or 5 AMP
Insulator Resistance: 1000M ohms min. At DC 500V
Contact Resistance: 25m ohms max. At DC 100mA
Operating Temperature: -55°C ~ 105°C



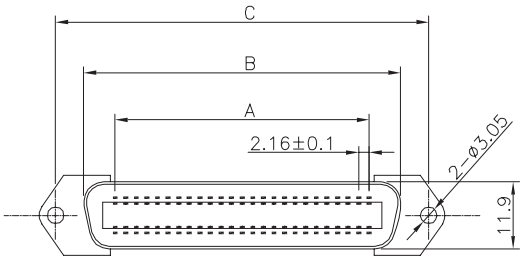

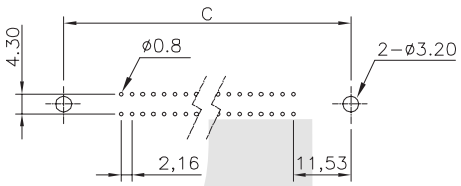

PCB Lay out

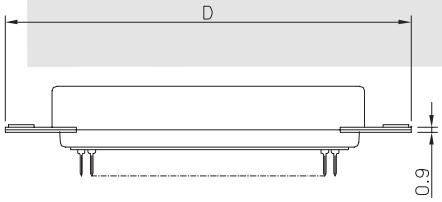

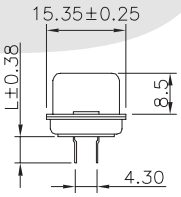

Positions	A	B	C	D	L
14	12.96	25.2	36.0	43.9	5.1
24	23.76	36.0	46.8	54.7	5.2
36	36.72	48.9	59.7	67.7	5.0
50	51.84	64.1	74.9	82.8	5.0

ORDER INFORMATION

Product NO.: KLS1-181-57B-XX - F -L

Pos. NO.
001=001 pos.
Contact Number of Row
181-57B=Centronic Connector PCB Straight Series
Number of Contacts
L=Blue B=Black
M=Male F=Female

D-SUB Series

KLS1-181-57B Centronic Connector PCB Straight Series

Material:
Housing: 30% Glass filled PBT UL94V-0
Contacts: Brass or Phosphor Bronze
Shell: Steel, 100u "Tin Over 50u" min Nickel
Clinch Nut: Brass, 100u "min Nickel Plated
Screwlock: Brass, 100u "min Nickel Plated

Electrical Characteristics:
Current Rating: 3AMP or 5 AMP
Insulator Resistance: 1000M ohms min. At DC 500V
Contact Resistance: 25m ohms max. At DC 100mA
Operating Temperature: -55°C ~ 105°C



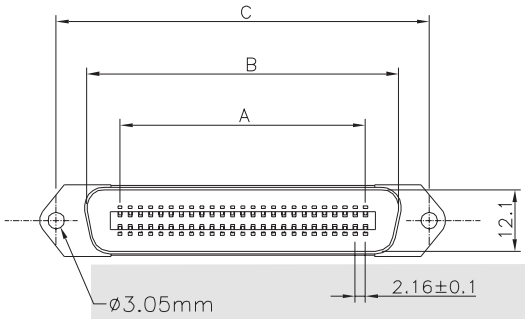

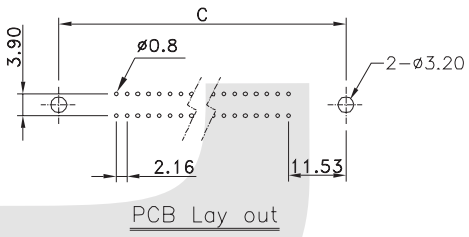

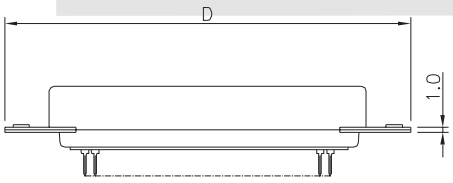

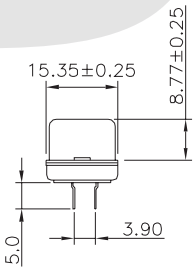

Positions	A	B	C	D
14	12.96	25.6	36.0	43.9
24	23.76	36.3	46.8	54.7
36	36.72	49.3	59.7	67.7
50	51.84	64.4	74.9	82.8

ORDER INFORMATION

Product NO.: KLS1-181-57B-XX -M -L

Pos. NO.
001=001 pos.
Contact Number of Row
181-57B=Centronic Connector PCB Straight Series
Number of Contacts
L=Blue B=Black
M=Male F=Female

D-SUB Series

KLS1-182-57A Centronic Connector Series

Material:
Housing: 30% Glass filled PBT UL94V-0
Contacts: Brass or Phosphor Bronze
Shell: Steel, 100u "Tin Over 50u" min Nickel
Clinch Nut: Brass, 100u "min Nickel Plated
Screwlock: Brass, 100u "min Nickel Plated

Electrical Characteristics:
Current Rating: 3AMP or 5 AMP
Insulator Resistance: 1000M ohms min. At DC 500V
Contact Resistance: 25m ohms max. At DC 100mA
Operating Temperature: -55°C ~ 105°C

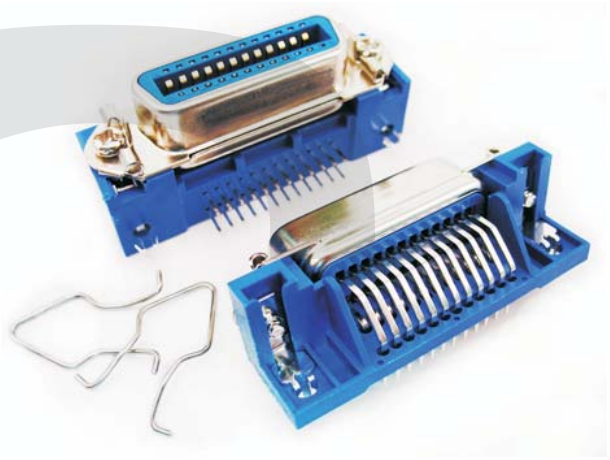

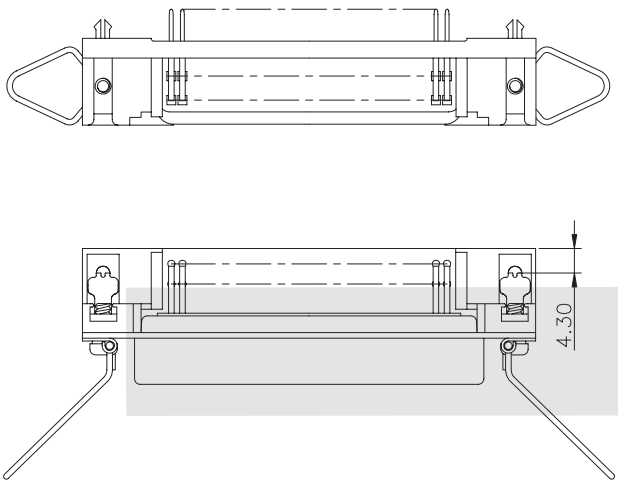

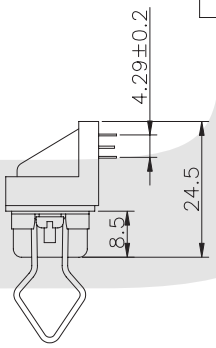

Positions	A	B	C	D
14	43.9	36.0	25.2	12.96
24	54.7	46.8	36.0	23.76
36	67.7	59.7	48.9	36.72
50	82.8	74.9	64.1	51.84

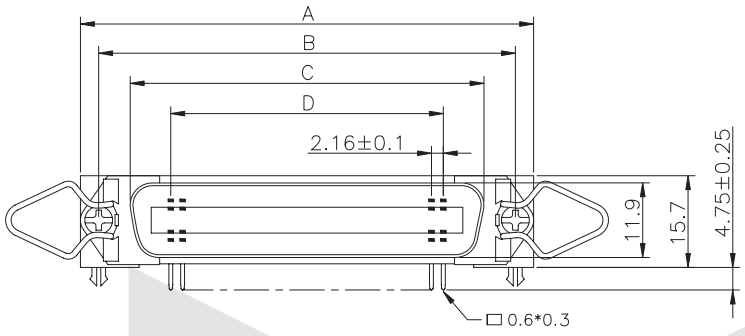

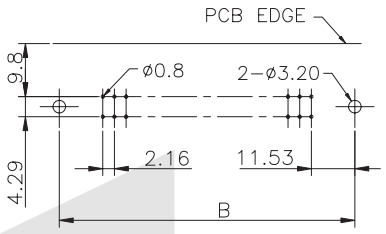

P.C.B. LAYOUT

ORDER INFORMATION

Product NO.: KLS1-182-57A-XX - F -L

Pos. NO.
001=001 pos.
Contact Number of Row
182-57A=Centronic connector Series
Number of Contacts

L=Blue B=Black
M=Male F=Female

D-SUB Series

KLS1-182-57A Centronic Connector Series

Material:
Housing: 30% Glass filled PBT UL94V-0
Contacts: Brass or Phosphor Bronze
Shell: Steel, 100u "Tin Over 50u" min Nickel
Clinch Nut: Brass, 100u "min Nickel Plated
Screwlock: Brass, 100u "min Nickel Plated

Electrical Characteristics:
Current Rating: 3AMP or 5 AMP
Insulator Resistance: 1000M ohms min. At DC 500V
Contact Resistance: 25m ohms max. At DC 100mA
Operating Temperature: -55°C ~ 105°C



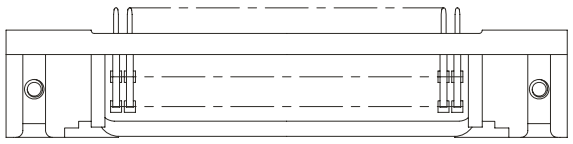

Positions	A	B	C	D
14	12.96	25.6	36.0	43.9
24	23.76	36.3	46.8	54.7
36	36.72	49.3	59.6	67.7
50	51.84	64.4	74.9	82.8

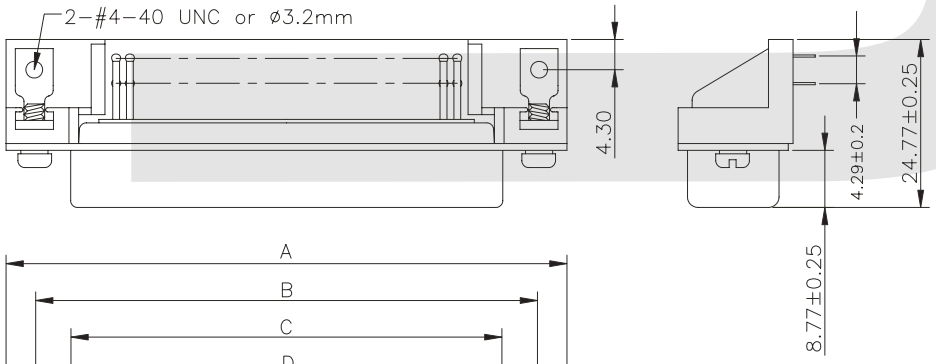

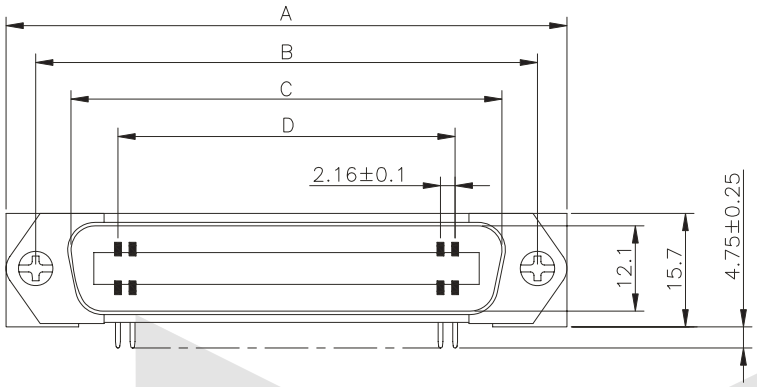

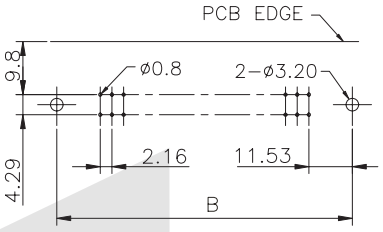

P.C.B. LAYOUT

ORDER INFORMATION

Product NO.: KLS1-182-57A-XX -M -L

Pos. NO.
001=001 pos.
Contact Number of Row
182-57A=Centronic connector Series
Number of Contacts
L=Blue B=Black
M=Male F=Female

D-SUB Series

KLS1-183-57A Centronic Connector IDC Series

Material:
Housing: 30% Glass filled PBT UL94V-0
Contacts: Brass or Phosphor Bronze
Shell: Steel, 100u "Tin Over 50u" min Nickel
Clinch Nut: Brass, 100u "min Nickel Plated
Screwlock: Brass, 100u "min Nickel Plated

Electrical Characteristics:
Current Rating: 3AMP or 5 AMP
Insulator Resistance: 1000M ohms min. At DC 500V
Contact Resistance: 25m ohms max. At DC 100mA
Operating Temperature: -55°C ~ 105°C



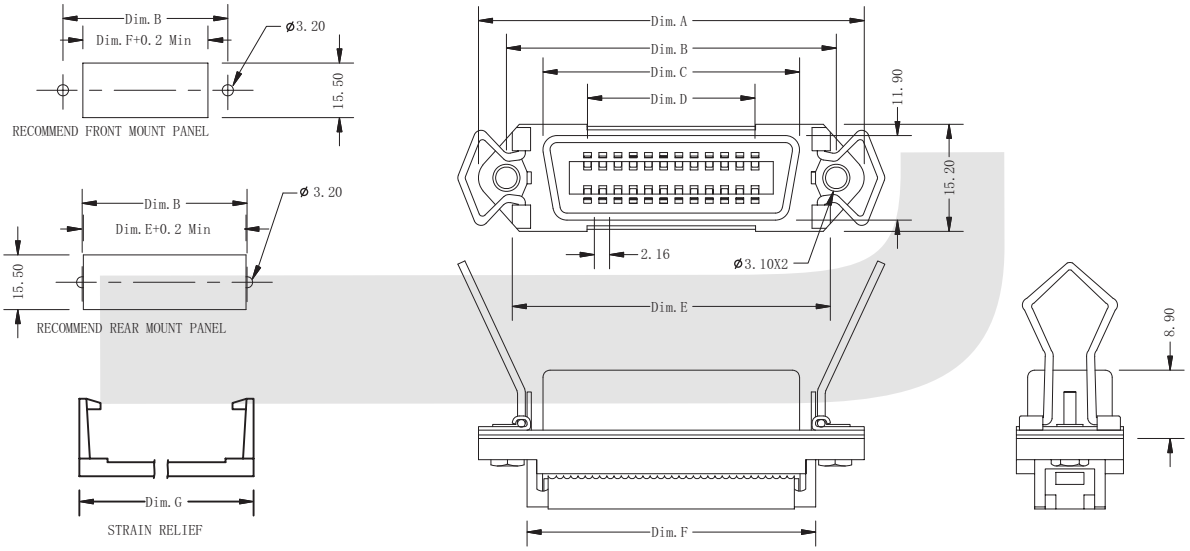

Dimensional Information

Dim. \ Circuits	14	24	36	50
Dim. A± 0.13	43.92	54.71	67.69	82.80
Dim. B± 0.10	35.99	46.79	59.74	74.85
Dim. C± 0.10	25.20	36.00	48.90	64.00
Dim. D± 0.10	12.96	23.76	36.72	51.84

Dim. \ Circuits	14	24	36	50
Dim. E± 0.10	35.15	45.95	58.80	74.25
Dim. F± 0.10	24.70	35.50	53.30	68.50
Dim. G± 0.10	24.70	35.50	54.40	70.50

ORDER INFORMATION

Product NO.: KLS1-183-57A-XX - F -L

Pos. NO.
001=001 pos.
Contact Number of Row
183-57A=Centronic Connector IDC Series
Number of Contacts
L=Blue B=Black
F=Female

D-SUB Series

KLS1-183-57A Centronic Connector IDC Series

Material:
Housing: 30% Glass filled PBT UL94V-0
Contacts: Brass or Phosphor Bronze
Shell: Steel, 100u "Tin Over 50u" min Nickel
Clinch Nut: Brass, 100u "min Nickel Plated
Screwlock: Brass, 100u "min Nickel Plated

Electrical Characteristics:
Current Rating: 3AMP or 5 AMP
Insulator Resistance: 1000M ohms min. At DC 500V
Contact Resistance: 25m ohms max. At DC 100mA
Operating Temperature: -55°C ~ 105°C

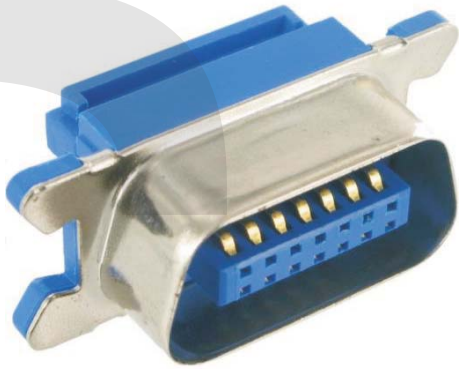

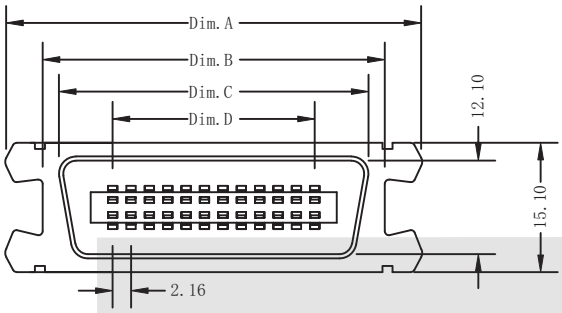

Dimensional Information

Dim. \ Circuits	14	24	36	50
Dim. A± 0.13	37.80	48.60	61.60	76.40
Dim. B± 0.10	29.60	40.40	53.40	68.20
Dim. C± 0.10	25.50	36.30	49.20	64.80
Dim. D± 0.10	12.96	23.76	36.72	51.84
Dim. E± 0.10	22.85	35.55	50.79	68.57

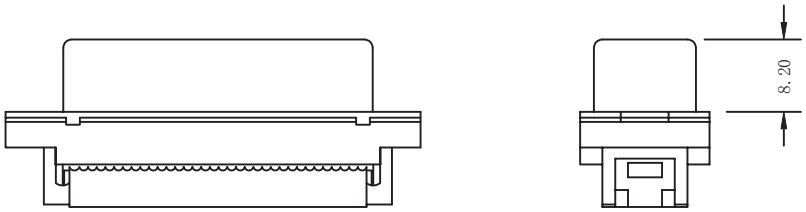

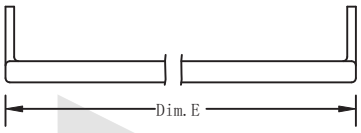

ORDER INFORMATION

Product NO.: KLS1-183-57A-XX -M -L

Pos. NO.
001=001 pos.
Contact Number of Row
183-57A=Centronic Connector IDC Series
Number of Contacts
L=Blue B=Black
M=Male

I

D-SUB Series

KLS1-178-57B Centronic Connector Series



Material:

Contacts: Brass or Phosphor Bronze
Housing: PBT (UL 94V-0)
Shell: Cold Roller Steel

Specification:

1. Current rating: 5 A Max.
2. Dielectric withstanding voltage: 1250 V (ac) for 1 min.
3. Contact resistance: 30 mΩ Max.
4. Insulation resistance: 1000 MΩ Min.
5. Total mating force: 9.0 Kgf Max.
6. Total unmating force: 5.0 Kgf Min.
7. Temperature range: -55 °C ~ 105 °C
8. Applicable wire: # 24AWG ~ # 28AWG

MECHANICAL CHARACTERISTICS:

Contact Resistance Force: 322 g. Maximum
Contact Separation Force: 70 g. Minimum

Female Type

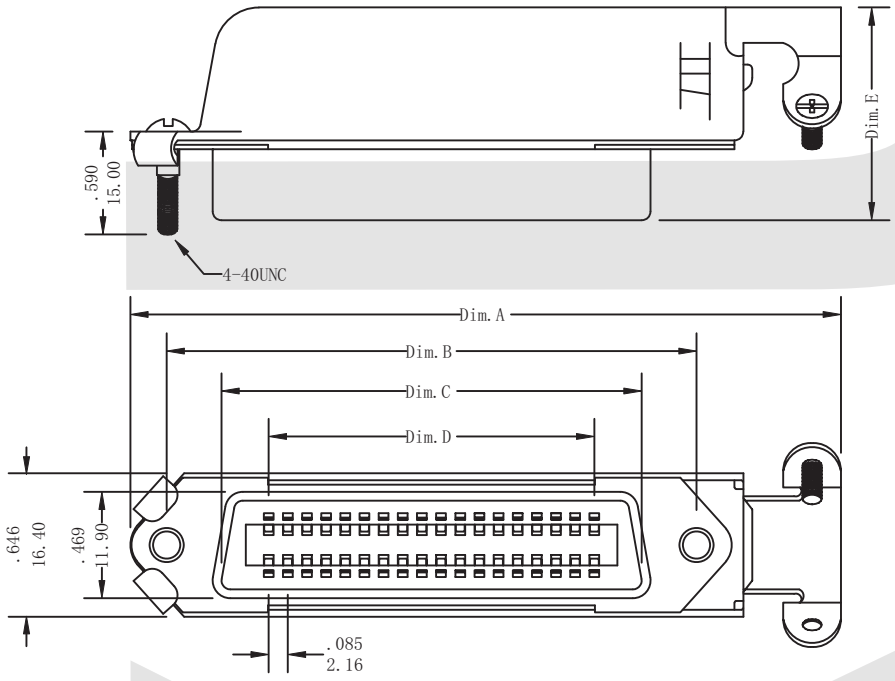

Dim. \ Circuits		36	50
Dim. A	0.20	90.10	103.70
Dim. B	0.10	59.70	74.90
Dim. C	0.10	49.35	64.47
Dim. D	0.13	36.72	51.84
Dim. E	0.20	27.30	33.65

ORDER INFORMATION

Product NO.: KLS1-178-57B-XX - F -L

Pos. NO.
001=001 pos.
Contact Number of Row
178-57A=Plastic Material Centronic connector
178-57B=Metal Material Centronic connector
Number of Contacts

L=Blue B=Black

M=Male F=Female

D-SUB Series

KLS1-178-57B Centronic Connector Series

Material:

Contacts: Brass or Phosphor Bronze
Housing: PBT (UL 94V-0)
Shell: Cold Roller Steel



Specification:

1. Current rating: 5 A Max.
2. Dielectric withstanding voltage: 1250 V (ac) for 1 min.
3. Contact resistance: 30 mΩ Max.
4. Insulation resistance: 1000 MΩ Min.
5. Total mating force: 9.0 Kgf Max.
6. Total unmating force: 5.0 Kgf Min.
7. Temperature range: -55 °C ~ 105 °C
8. Applicable wire: # 24AWG ~ # 28AWG

MECHANICAL CHARACTERISTICS:

Contact Resistance Force: 322 g. Maximum
Contact Separation Force: 70 g. Minimum

Male Type

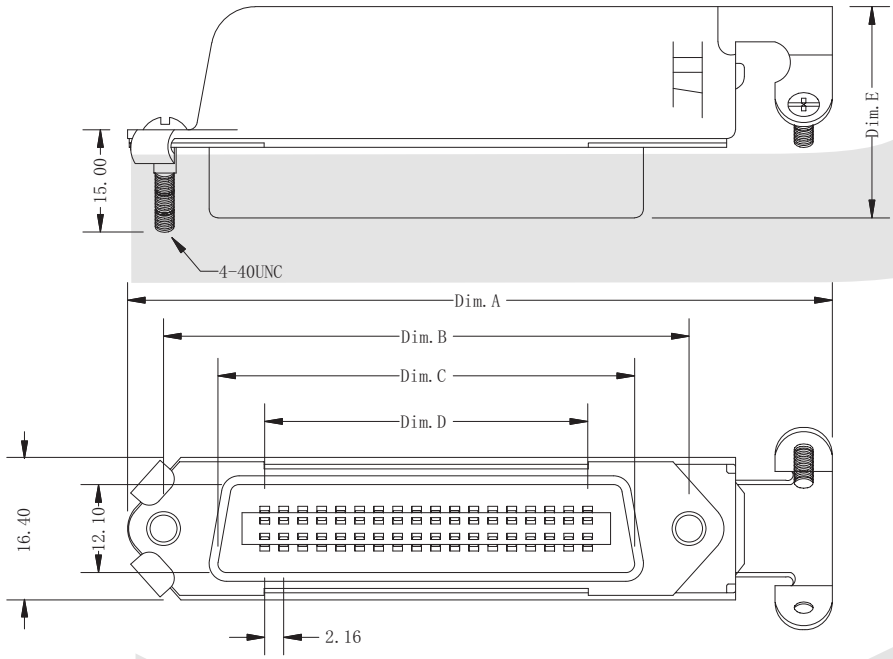

Dim. \ Circuits		36	50
Dim. A	0.20	90.10	103.70
Dim. B	0.10	59.70	74.90
Dim. C	0.10	49.35	64.47
Dim. D	0.13	36.72	51.84
Dim. E	0.20	27.30	33.65

ORDER INFORMATION

Product NO.: KLS1-178-57B-XX -M -L

Pos. NO.
001=001 pos.
Contact Number of Row
178-57A=Plastic Material Centronic connector
178-57B=Metal Material Centronic connector
Number of Contacts
L=Blue B=Black
M=Male F=Female

D-SUB Series

KLS1-178-57A Centronic Connector Series



Material:

Contacts: Brass or Phosphor Bronze
Housing: PBT (UL 94V-0)
Shell: Plastic Material

Specification:

1. Current rating: 5 A Max.
2. Dielectric withstanding voltage: 1250 V (ac) for 1 min.
3. Contact resistance: 30 mΩ Max.
4. Insulation resistance: 1000 MΩ Min.
5. Total mating force: 9.0 Kgf Max.
6. Total unmating force: 5.0 Kgf Min.
7. Temperature range: -55 °C ~ 105 °C
8. Applicable wire: # 24AWG ~ # 28AWG

MECHANICAL CHARACTERISTICS:

Contact Resistance Force: 322 g. Maximum
Contact Separation Force: 70 g. Minimum

Female Type

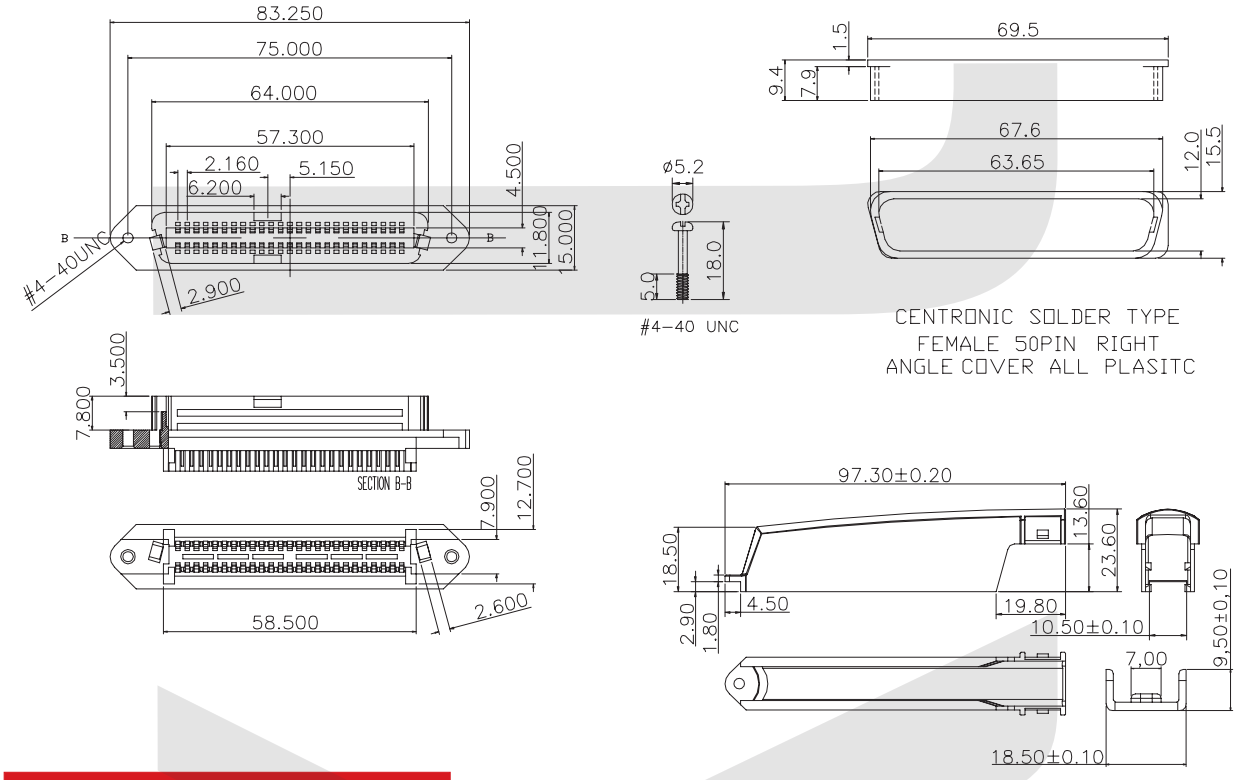

ORDER INFORMATION

Product NO.: KLS1-178-57A-XX - F -L

Pos. NO.
001=001 pos.
Contact Number of Row
178-57A=Plastic Material Centronic connector
178-57B=Metal Material Centronic connector
Number of Contacts

L=Blue B=Black

M=Male F=Female

D-SUB Series

KLS1-178-57A Centronic Connector Series



Material:

Contacts: Brass or Phosphor Bronze
Housing: PBT (UL 94V-0)
Shell: Plastic Material

Specification:

1. Current rating: 5 A Max.
2. Dielectric withstanding voltage: 1250 V (ac) for 1 min.
3. Contact resistance: 30 mΩ Max.
4. Insulation resistance: 1000 MΩ Min.
5. Total mating force: 9.0 Kgf Max.
6. Total unmating force: 5.0 Kgf Min.
7. Temperature range: -55 °C ~ 105 °C
8. Applicable wire: # 24AWG ~ # 28AWG

MECHANICAL CHARACTERISTICS:

Contact Resistance Force: 322 g. Maximum
Contact Separation Force: 70 g. Minimum

Male Type

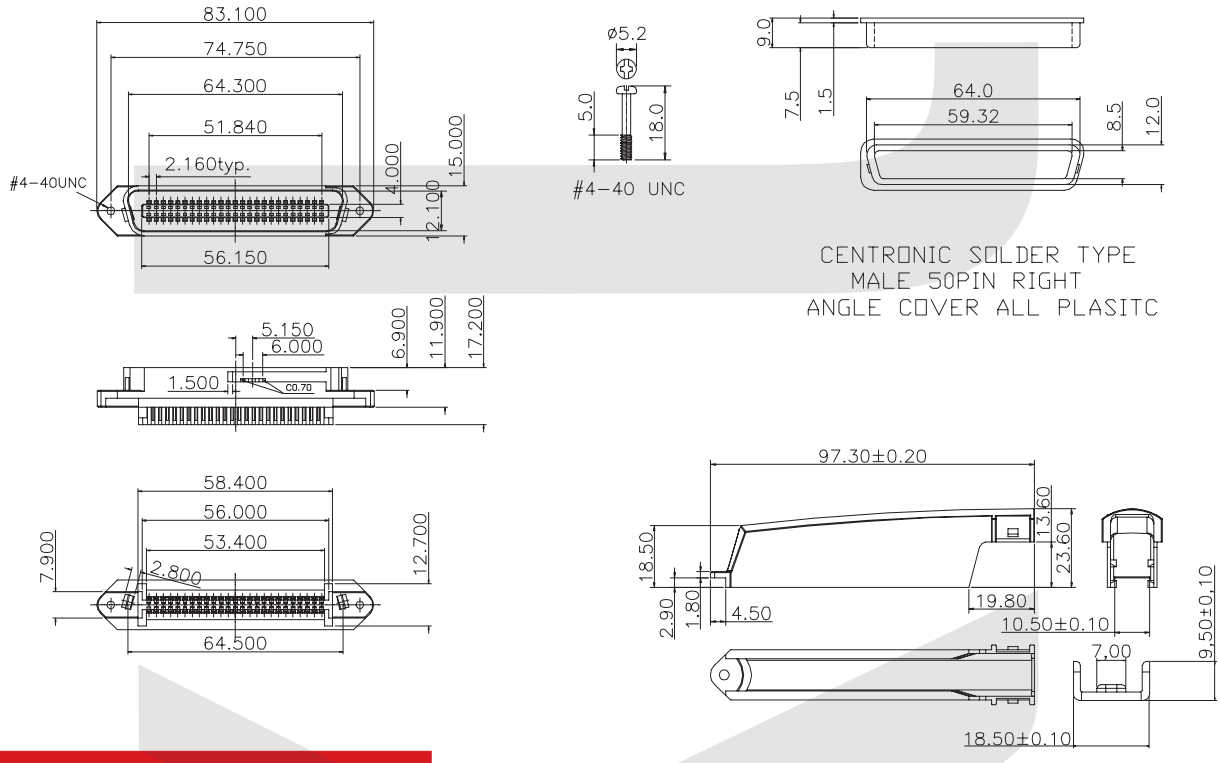

ORDER INFORMATION

Product NO.: KLS1-179-57A-XX -M -L

Pos. NO.
001=001 pos.
Contact Number of Row
178-57A=Plastic Material Centronic connector
178-57B=Metal Material Centronic connector
Number of Contacts

L=Blue B=Black

M=Male F=Female

I

D-SUB Series

KLS1-SCSI-01 SCSI Connector PCB Right Angle Series

Material

Housing And Cover: Plastic thermoplastic PBT UL 94V-0 Black
Contact: Copper Alloy
Front Shell: Steel Nickel Plated Over Copper
Boardlock: Brass Tin Plated Over Copper
Bracket: Steel Nickel Plated Over Copper

Electrical

Contact Current Rating: 1AMP
Dielectric Withstanding Voltage: 500MΩ/MIN
Contact Resistance: 35MΩ/MAX
Operation Temperature: -55°C ~ +105°C

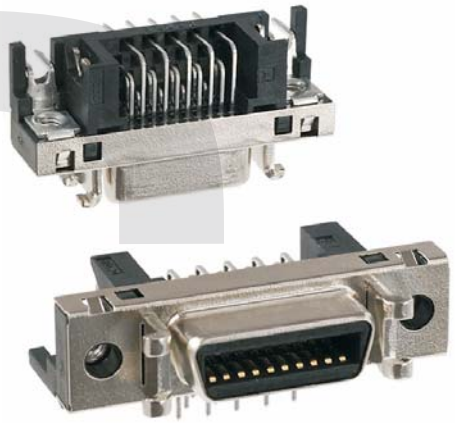

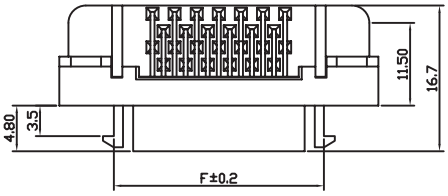

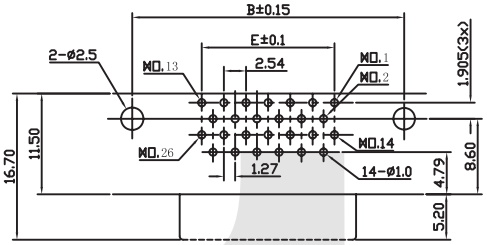

PCB LAYOUT

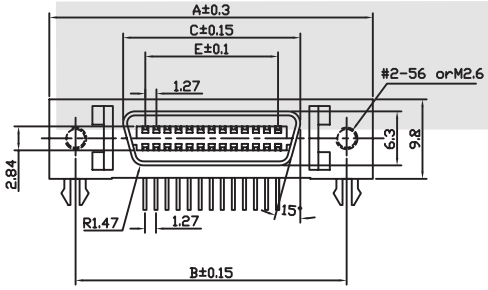

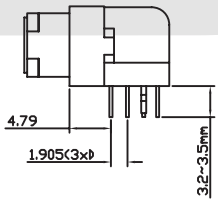

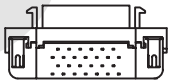

W/latch block

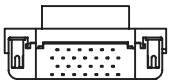

W/O latch block

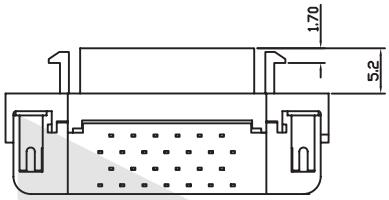

No. of CONTACTS	A	B	C	E	F
14	29.57	23.64	12.63	7.62	17.02
20	33.38	27.45	16.44	11.43	20.83
26	37.19	31.26	20.25	15.24	24.64
36	43.54	37.61	26.60	21.59	30.99
50	52.43	46.50	35.49	30.48	39.88
68	63.86	57.93	46.92	41.91	51.30
100	84.18	78.25	67.24	62.23	

ORDER INFORMATION

Product NO.: KLS1-SCSI-01-XX - F- B- W

Pos. NO.
Contact Number of Row
SCSI-01=SCSI Connector Series
Number of Contacts

W=With latch block
W/0=Without latch block
B=Black W=White
F=Female

D-SUB Series

KLS1-SCSI-02 SCSI Connector IDC Series

Material

Housing And Cover: Plastic thermoplastic PBT UL 94V-0 Black
Contact: Copper Alloy
Front Shell: Steel Nickel Plated Over Copper
Boardlock: Brass Tin Plated Over Copper
Bracket: Steel Nickel Plated Over Copper

Electrical

Contact Current Rating: 1AMP
Dielectric Withstanding Voltage: 500MΩ/MIN
Contact Resistance: 35MΩ/MAX
Operation Temperature: -55°C ~ +105°C

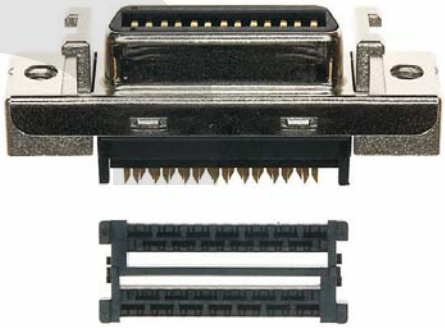

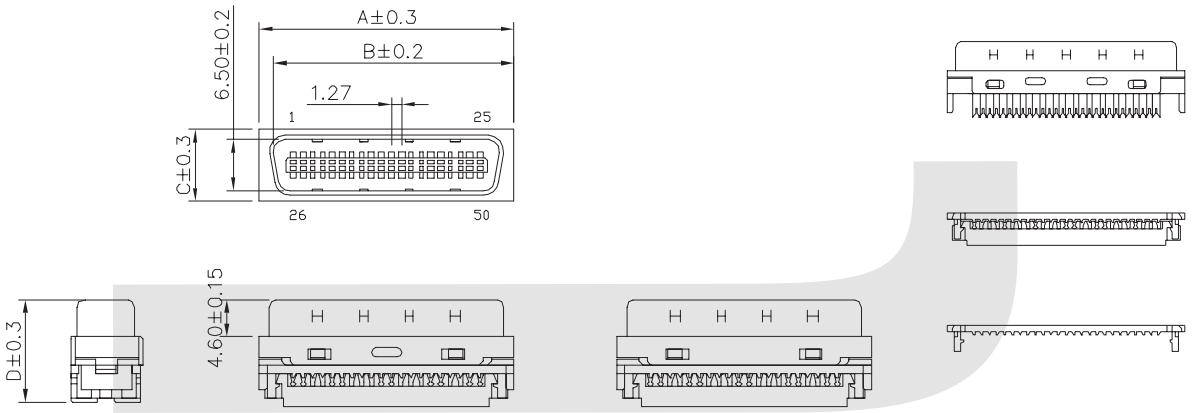

Assembly type
(With Hood)
Male type only

Molded Type
(W/O Hood)
Male type only

Termination Cover

Termination Plate Cover

Dimensions

Positions	A	B	C	D
14	16.45	12.80	8.60	13.10
20	20.20	16.60	9.50	13.10
26	24.00	20.40	9.50	13.10
36	30.40	26.70	8.60	13.10
50	39.30	35.60	9.50	13.80
68	50.90	46.95	9.30	13.10
100	71.05	67.29	9.30	13.50

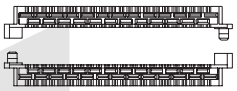

Wire Holder

ORDER INFORMATION

Product NO.: KLS1-SCSI-02-XX - F- B- W/0

- Pos. NO.
- Contact Number of Row
  SCSI-02=SCSI Connector Series
- Number of Contacts
- F=Female
- B=Black W=White
- W=With latch block
  W/0=Without latch block

D-SUB Series

KLS1-SCSI-02 SCSI Connector IDC Series

I

Material

Housing And Cover: Plastic thermoplastic PBT UL 94V-0 Black
Contact: Copper Alloy
Front Shell: Steel Nickel Plated Over Copper
Boardlock: Brass Tin Plated Over Copper
Bracket: Steel Nickel Plated Over Copper

Electrical

Contact Current Rating: 1AMP
Dielectric Withstanding Voltage: 500MΩ/MIN
Contact Resistance: 35MΩ/MAX
Operation Temperature: -55°C ~ +105°C

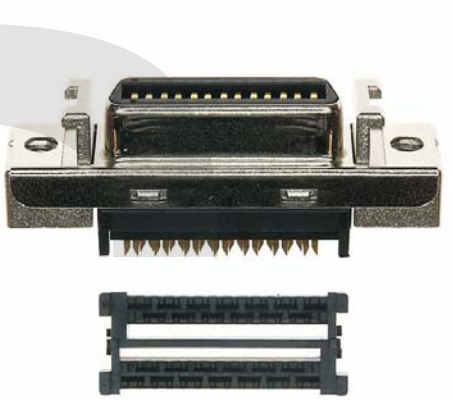

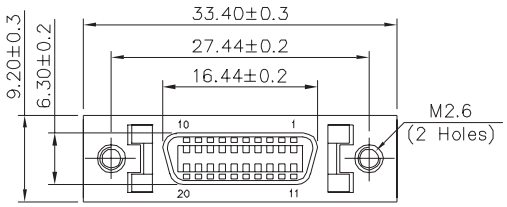

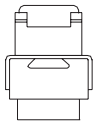



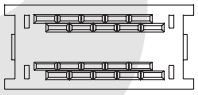

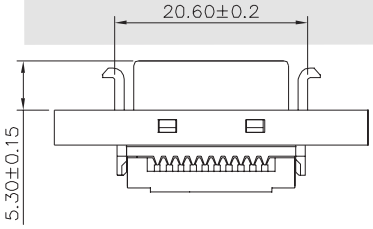

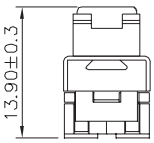

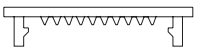

Termination Cover





Wire Holder

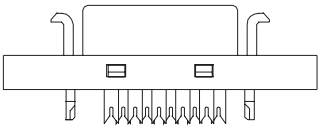



With latch blocks
20P Female type only

ORDER INFORMATION

Product NO.: KLS1-SCSI-02-20-F-B-W

- Pos. NO.
- Contact Number of Row
  SCSI-02=SCSI Connector Series
- Number of Contacts
- F=Female
- B=Black W=White
- W=With latch block
  W/0=Without latch block

D-SUB Series

KLS1-SCSI-03 SCSI Connector Solder Series

Material

Housing And Cover: Plastic thermoplastic PBT UL 94V-0 Black
Contact: Copper Alloy
Front Shell: Steel Nickel Plated Over Copper
Boardlock: Brass Tin Plated Over Copper
Bracket: Steel Nickel Plated Over Copper

Electrical

Contact Current Rating: 1AMP
Dielectric Withstanding Voltage: 500MΩ/MIN
Contact Resistance: 35MΩ/MAX
Operation Temperature: -55°C ~ +105°C



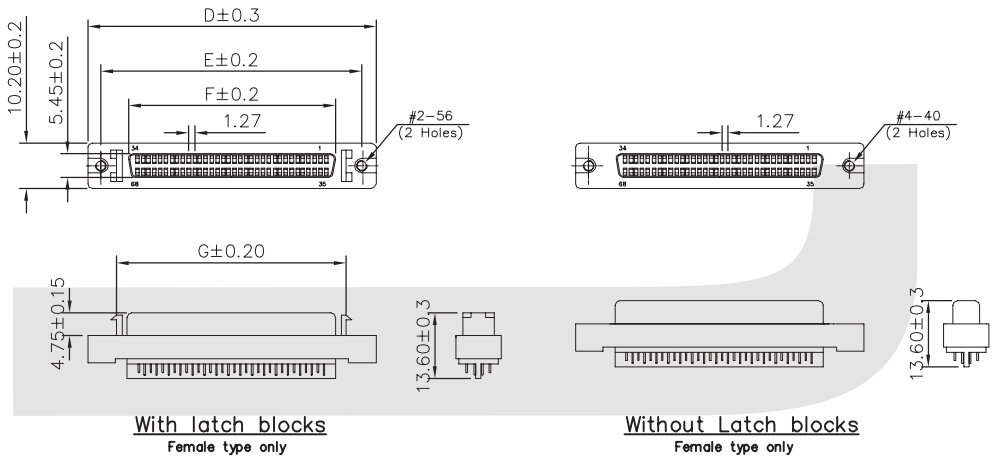

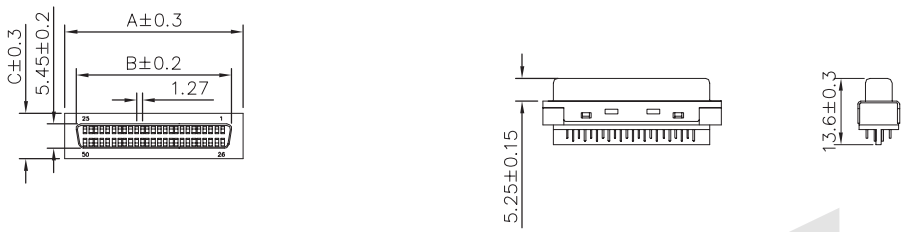

Dimensions

Positions	A	B	C	D	E	F	G
26	24.00	19.46	9.30	37.20	31.20	19.46	24.70
36	30.40	25.80	8.40	43.50	37.60	25.80	31.00
50	39.20	34.70	9.30	52.60	46.80	34.70	40.10
68	50.70	46.20	9.30	64.00	57.90	46.20	50.90

ORDER INFORMATION

Product NO.: KLS1-SCSI-03-XX - F- B- W

Pos. NO.
Contact Number of Row
SCSI-03=SCSI Connector Series
Number of Contacts

W=With latch block
W/0=Without latch block
A=Assembly type
B=Black W=White
F=Female

D-SUB Series

KLS1-SCSI-03 SCSI Connector Solder Series

Material

Housing And Cover: Plastic thermoplastic PBT UL 94V-0 Black
Contact: Copper Alloy
Front Shell: Steel Nickel Plated Over Copper
Boardlock: Brass Tin Plated Over Copper
Bracket: Steel Nickel Plated Over Copper

Electrical

Contact Current Rating: 1AMP
Dielectric Withstanding Voltage: 500MΩ/MIN
Contact Resistance: 35MΩ/MAX
Operation Temperature: -55°C ~ +105°C



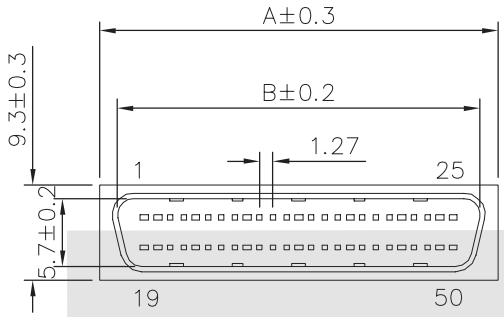

Dimensions

Positions	A	B
26	24.00	19.60
50	39.30	34.85
68	50.70	46.35

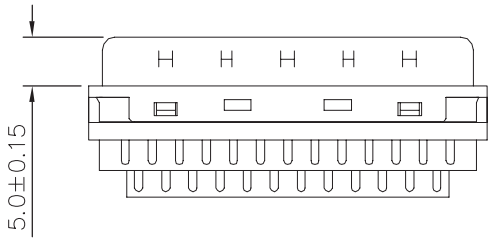

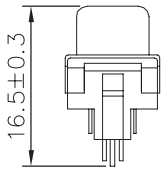

ORDER INFORMATION

Product NO.: KLS1-SCSI-03-XX - F- B- A

Pos. NO.
Contact Number of Row
SCSI-03=SCSI Connector Series
Number of Contacts

W=With latch block
W/0=Without latch block
A=Assembly type
B=Black W=White
F=Female

DVI connectors (D)igital (V)isual (I)nterface

P/N:KLS1-DVI-M/DVI connector male plug wire solder Dual link



1:Electrical Characterstics

Current Rating: 1.5amp.max
Dielectric with standing voltage: 500v ac R.M.S. for one min
Insulation resistance: 1000M Ohms min. at 500v dc
Contact resistance: 20M Ohms max
Operating temperature: 0 ~+85

2:Material :

Housing:	PBT+258%
Terminal:	Brass gold and tin palted
Back shield:	Spcc tin plating plated

3:Drawing

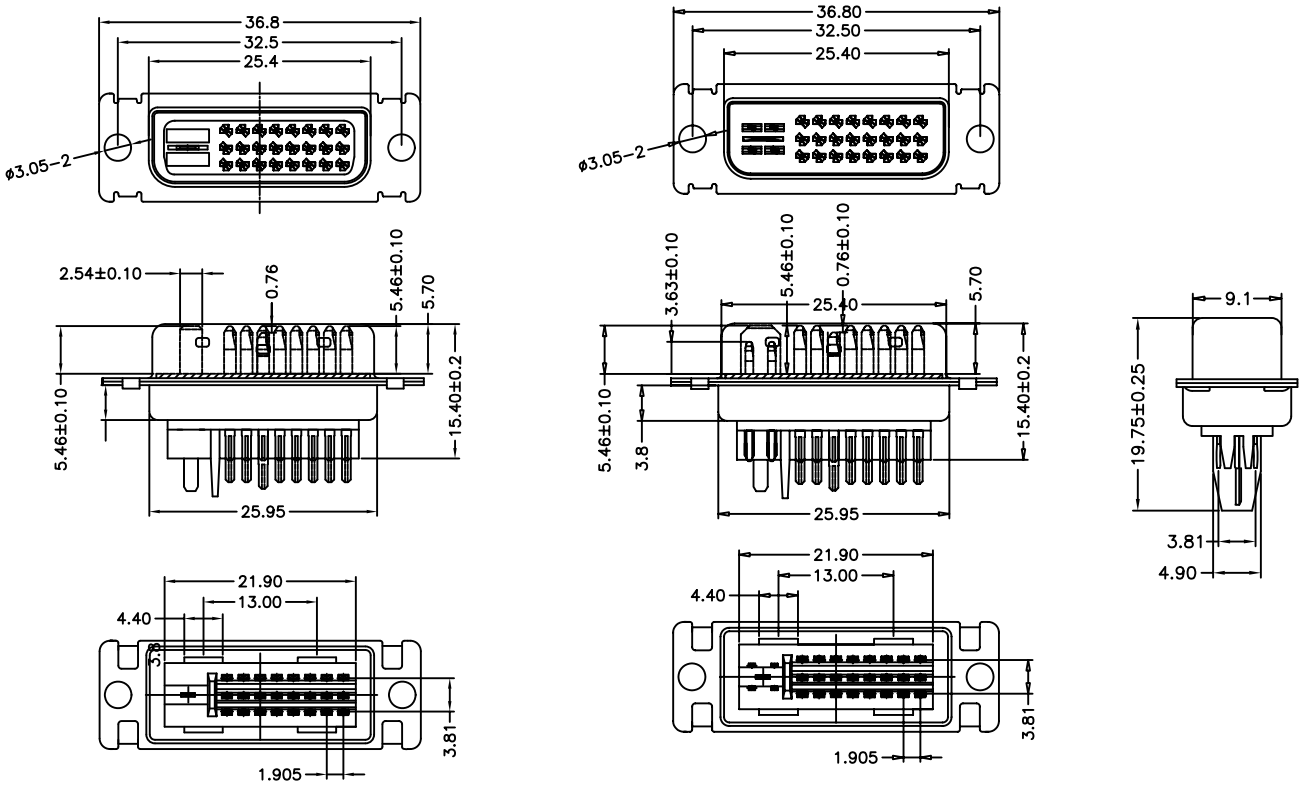

M25 M29

4:Ordering information

P/N:KLS1-DVI-M25/M29-B/L/W

M25:24+1 digital signal
M29:24+5 digital & analog signal

Insulator color
B: Black
L: Blue
W:White

DVI connectors (D)igital (V)isual (I)nterface

P/N:KLS1-DVI-F1/DVI connector female socket suit to hood type Dual link



1:Electrical Characterstics

Current Rating: 1.5amp.max
Dielectric with standing voltage: 500v ac R.M.S. for one min
Insulation resistance: 1000M Ohms min. at 500v dc
Contact resistance: 20M Ohms max
Operating temperature: 0 ~+85

2:Material :

Housing:	PBT+258%
Terminal:	Brass gold and tin palted
Back shield:	Spcc tin plating plated

3:Drawing

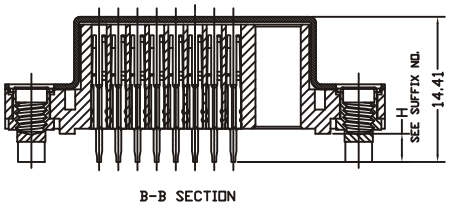

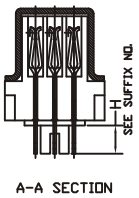

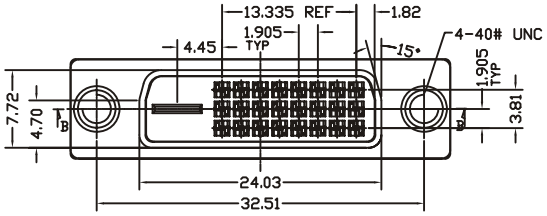

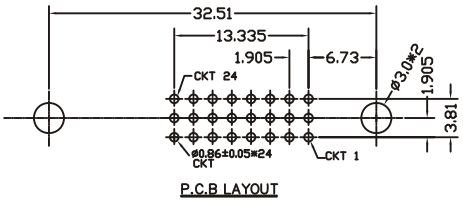

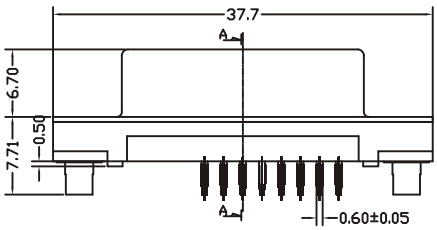

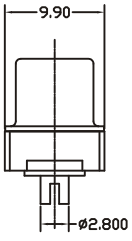

4:Ordering information

P/N:KLS1-DVI-F1-25/29-B/L/W

25:24+1 digital signal
29:24+5 digital & analog signal

Insulator color
B: Black
L: Blue
W:White

DVI connectors

(D)igital (V)isual (I)nterface

P/N:KLS1-DVI-F2/DVI connector female socket PCB dip type Dual link



S

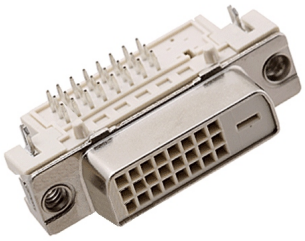

R

1:Electrical Characterstics

Current Rating: 1.5amp.max
Dielectric with standing voltage: 500v ac R.M.S. for one min
Insulation resistance: 1000M Ohms min. at 500v dc
Contact resistance: 20M Ohms max
Operating temperature: 0 ~+85

2:Material :

Housing:	PBT+258%
Terminal:	Brass gold and tin palted
Back shield:	Spcc tin plating plated

3:Drawing

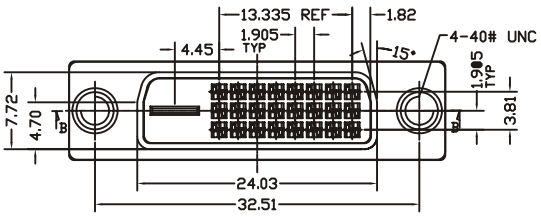

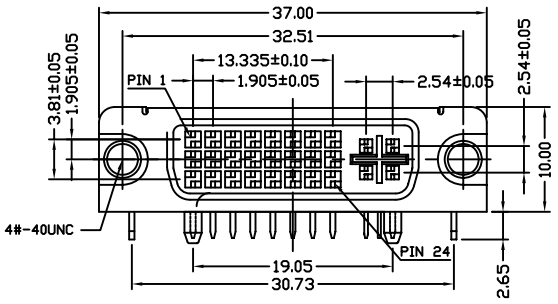

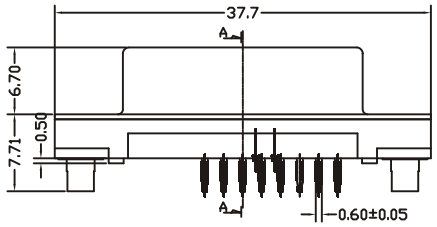

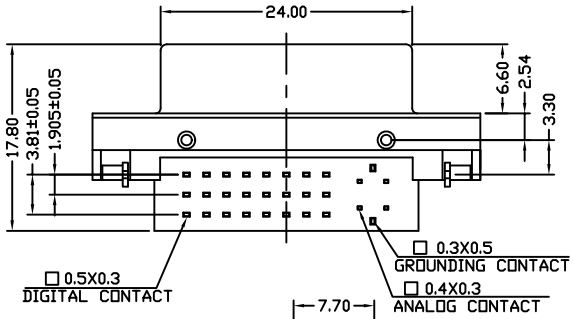

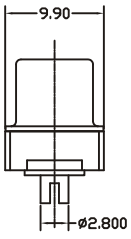

25-S

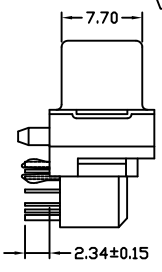

29-R

4:Ordering information

P/N:KLS1-DVI-F2-25/29-S/R-B/L/W

25:24+1 digital signal
29:24+5 digital & analog signal

S: Straigh/ pcb dip 180
R: Right angle/pcb dip 90

Insulator color
B: Black
L: Blue
W: White

All specifcation & Dimension are subject to change , please call to KLS

DVI Hoods

DVI Hood shield PVC material



1: Technical specification:

Material : PVC
Cable entry : Top
Screw nut : UNC4-40
Cable Dia. : 8.0mm & 9.5mm

2: Drawing

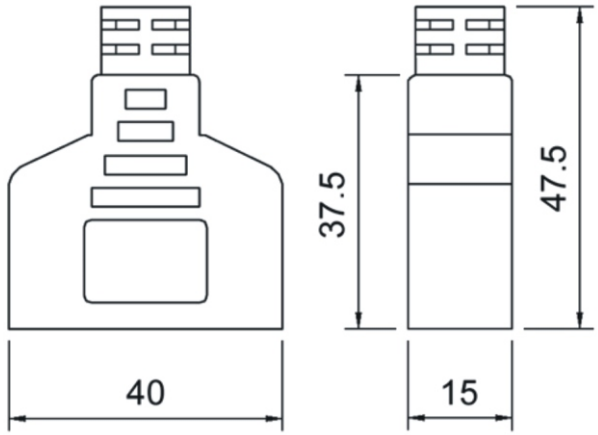

3: Ordering information

KLS P/N	Material	Cable Dia.
KLS1-DVI-H1-8.0	PVC	8.0mm
KLS1-DVI-H1-9.5	PVC	9.5mm

DVI Hood with screw nuts shield PVC materiall

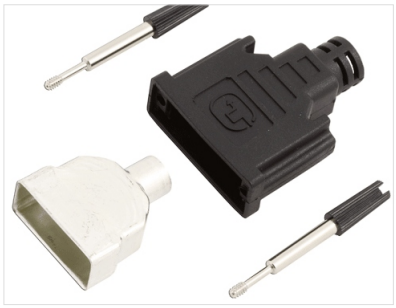

1: Technical specification:

Material : PVC
Cable entry : Top
Screw nut : UNC4-40
Cable Dia. : 8.0mm & 9.5mm

2: Drawing

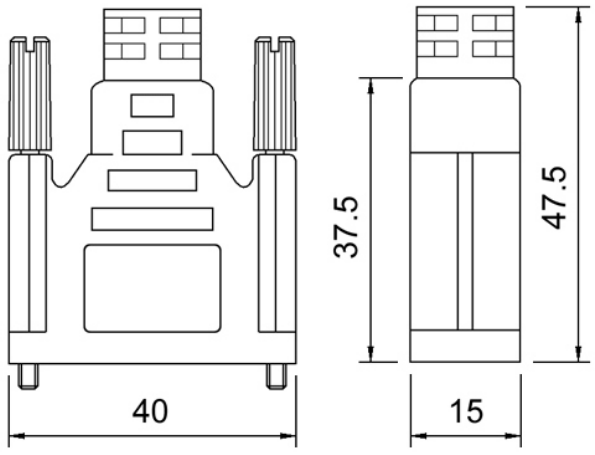

3: Ordering information

KLS P/N	Material	Cable Dia.
KLS1-DVI-H2-8.0	PVC	8.0mm
KLS1-DVI-H2-9.5	PVC	9.5mm

DVI Adapters-DVI-DVI

DVI male to DVI female adapter both 25P & 29P



Ordering information

KLS P/N	Description
KLS1-DVI25F-DVI25M	DVI 25 female to DVI25 male
KLS1-DVI29F-DVI29M	DVI 29 female to DVI29 male

DVI Adapters-DVI-VGA (HD15)



HOrdering information

KLS P/N	Description
KLS1-DVI25M-HD15M	DVI 25 male to HD15 VGA male
KLS1-DVI25M-HD15F	DVI 25 male to HD15 VGA female
KLS1-DVI25F-HD15M	DVI 25 female to HD15 VGA male
KLS1-DVI25F-HD15F	DVI 25 female to HD15 VGA female
KLS1-DVI29M-HD15M	DVI 29 male to HD15 VGA male
KLS1-DVI29M-HD15F	DVI 29 male to HD15 VGA female
KLS1-DVI29F-HD15M	DVI 29 female to HD15 VGA male
KLS1-DVI29F-HD15F	DVI 29 female to HD15 VGA female

DVI Adapters-DVI-HMDI





Ordering information

KLS P/N	Description
KLS1-DVI25M-HDMIM	DVI 25 male to HDMI male
KLS1-DVI25M-HDMIF	DVI 25 male to HDMI female
KLS1-DVI25F-HDMIM	DVI 25 female to HDMI male
KLS1-DVI25F-HDMIF	DVI 25 female to HDMI female
KLS1-DVI29M-HDMIM	DVI 29 male to HDMI male
KLS1-DVI29M-HDMIF	DVI 29 male to HDMI female
KLS1-DVI29F-HDMIM	DVI 29 female to HDMI male
KLS1-DVI29F-HDMIF	DVI 29 female to HDMI female

DVI Adapters-DVI-DFP

DVI-D Male to DFP Female Adapter



Ordering information

KLS P/N	Description
KLS1-DVI19F-DFP	DVI 18+1 female to DFP

DVI Adapters-DVI-3RCA



Ordering information

KLS P/N	Description
KLS1-DVI29M-3RCA	DVI 29 male to 3RCA with DIP switch

DVI cables

- **DVI-D 24+1 Dual Link Cable / Male to Male & Female to Male**



Male ◄►Male



Female ◄►Male

4: Ordering information

P/N: KLS1-DVI-D2-M/F-XX-B/L/W

- DVI-D2: DVI 24+1 Dual link

M: Male
F: Female

Length of cable: 01: 1M
02: 2M
03: 3M
-
-
-

Insulator color: B: Black
L: Blue
W: White

DVI-I 24+5 Dual Link Cable / Male to Male & Female to Male



Male ◄►Male



Female ◄►Male

4:Ordering information

P/N:KLS1-DVI-I2-M/F-XX-B/L/W

- DVI-I2:DVI 24+5 Dual link
- Insulator color: B: Black, L: Blue, W:White
- Length of cable: 01: 1M, 02: 2M, 03: 3M, - , - , -
- M: Male, F: Female

DVI Analog to VGA Cable



DVI-A ◄► VGA Hd15

4:Ordering information

P/N:KLS1-DVI-A/HD15-M/F-XX-B/L/W

- DVI-A/HD15: DVI-A Analog to VGA Hd15 cable
- Insulator color: B: Black, L: Blue, W:White
- Length of cable: 01: 1M, 02: 2M, 03: 3M
- M: Male, F: Female

DVI-D to HDMI Male to Male, Black Cable

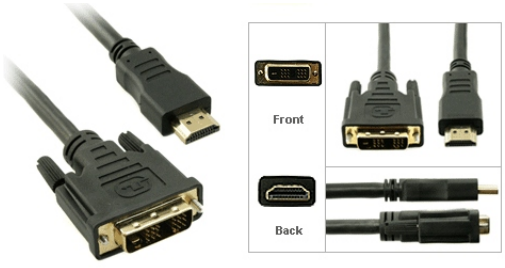

DVI-D ◄► HDMI

4:Ordering information

P/N:KLS1-DVI-D/HDMI-M/M-XX

- Length of cable: 01: 1M, 02: 2M, 03: 3M, - , -
- Male to Male

DVI Digital to DFP Cable (DVI-D Male to DFP Male Cable), Black



DVI-D ◄—► DFP

4: Ordering information

P/N: KLS1-DVI-D1/DFP-M/M-XX-B/L/W

- DVI-D1: DVI-D single link
- Insulator color: B: Black, L: Blue, W: White
- Length of cable: 01: 1M, 02: 2M, 03: 3M, - - -
- M: Male, F: Female

DVI-I to RGB Cable (DVI-I Male to RCA Male x 3 Cable), Black



DVI-I ◄—► 3RCA

4: Ordering information

P/N: KLS1-DVI-I2/3CRA-M/M-XX-B/L/W

- DVI-I2: DVI-I Dual link
- Insulator color: B: Black, L: Blue, W: White
- Length of cable: 01: 1M, 02: 2M, 03: 3M, - - -
- M: Male plug, F: Female socket

KLS

1-Connectors & Connector Components-Разъемы, соединители и их узлы

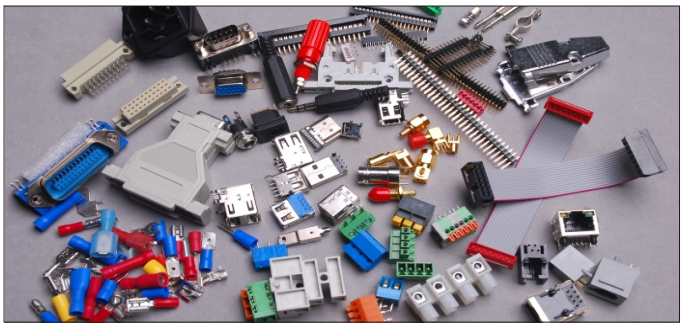

1-1 Wire to Board connectors
1-2 Board to Board connectors
1-3 Input/Output (Box to Box)
1-4 **Socket & Card connectors**
1-5 Power connectors
1-6 Audio & Video connectors
1-7 RF & Coax
1-8 Terminal Blocks & Strips
1-9 Terminals & Splices

More . . .

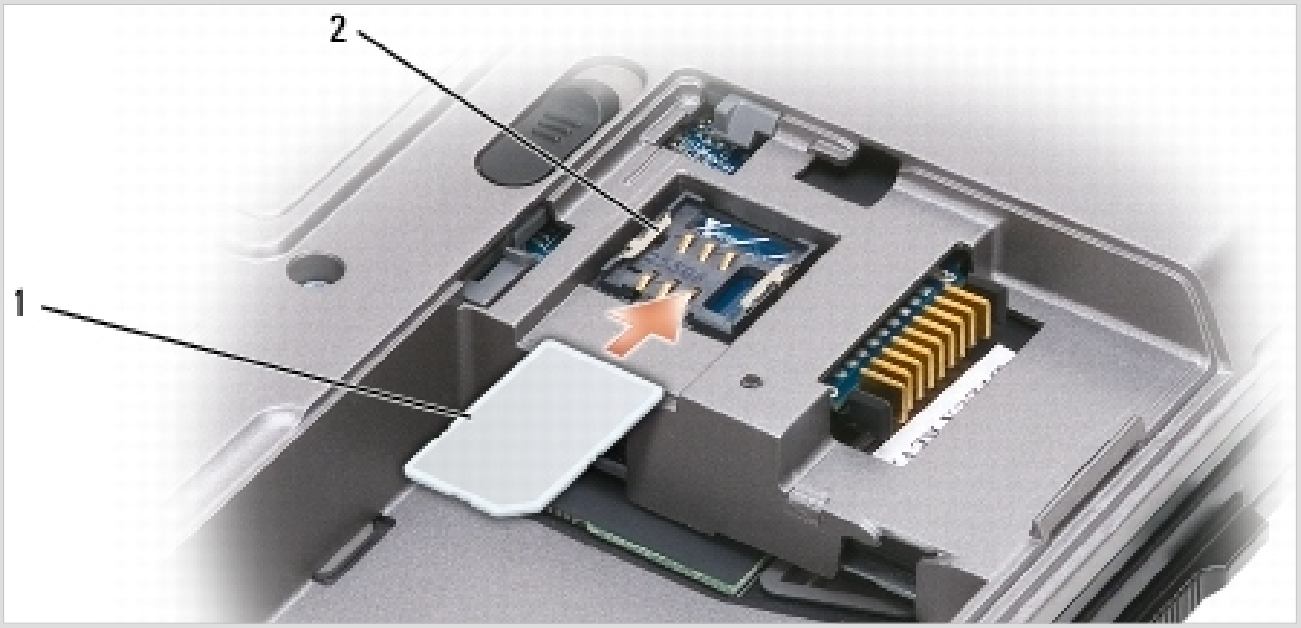

KLS ELECTRONIC CO; LTD. WWW.CNKLS.COM Email:sales@cnkls.com
Tel:0086 574 86824882 Fax:0086 574 86824882

SIM Card and Memory Card Connector

KLS1-CF01 (CF Card male smt 50p)

MATERIAL
Housing :High Temperature Thermoplastic.
Contact: Copper Alloy.
Ped: Brass

PLATING
Contact: Underplated:50u" Min Ni.
Contact area: Select Gold over Ni Plated.
Solder Tail: 100u" min Sn/Pb over Ni Plated
Ped: 100u" min Sn/Pb over 50u" min Ni Plated

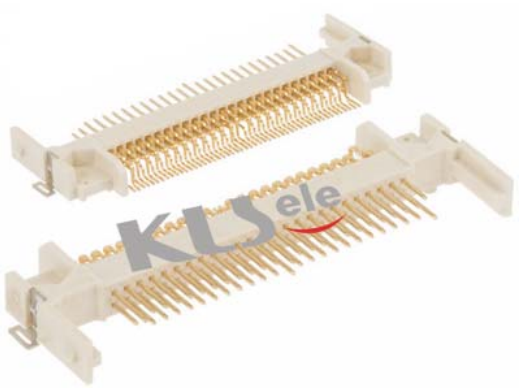

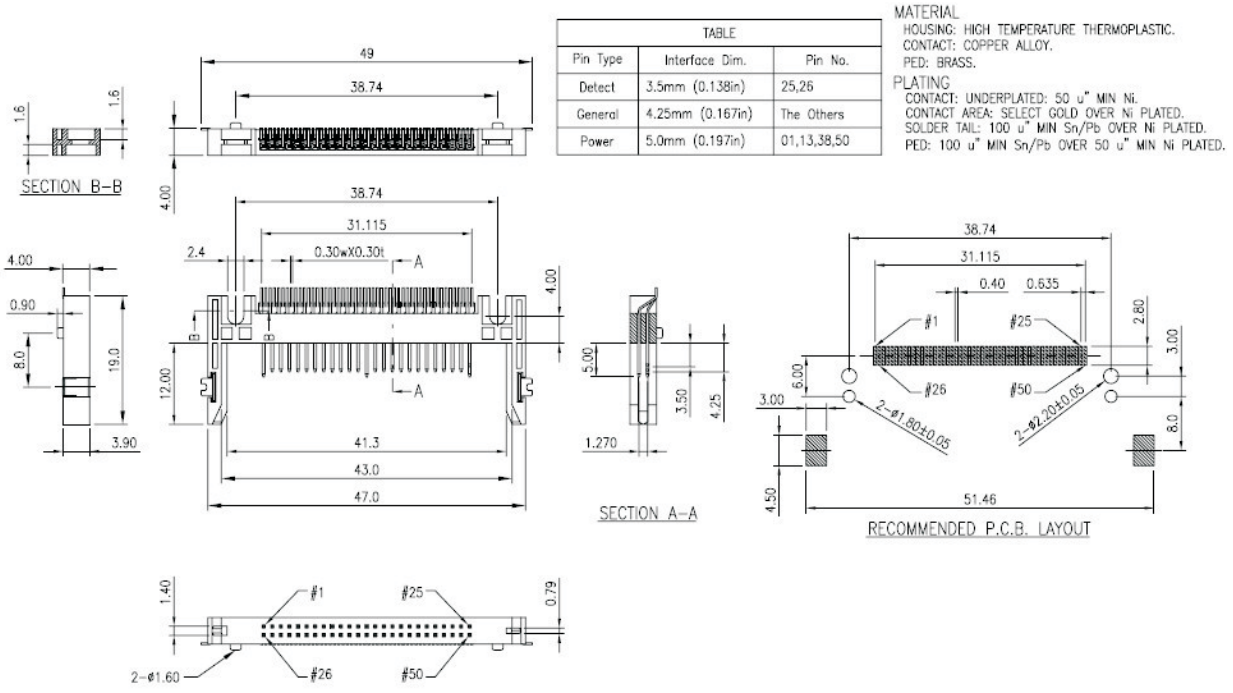

ORDER INFORMATION

Product NO. : KLS1-CF01

Pos. NO.
CF Card male smt 50p

SIM Card and Memory Card Connector

KLS1-CF02 (CF Card male smt 50p)

MATERIAL
Housing :High Temperature Thermoplastic.
Contact: Copper Alloy.
Ped: Brass

PLATING
Contact: Underplated:50u" Min Ni.
Contact area: Select Gold over Ni Plated.
Solder Tail: 100u" min Sn/Pb over Ni Plated
Ped: 100u" min Sn/Pb over 50u" min Ni Plated

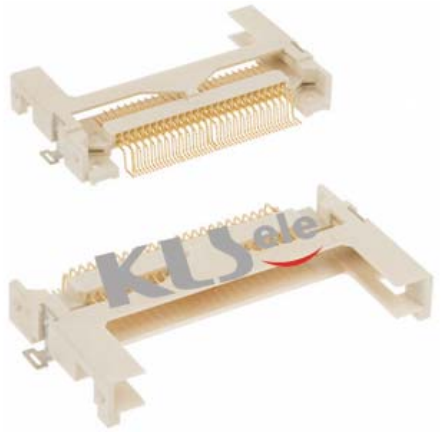

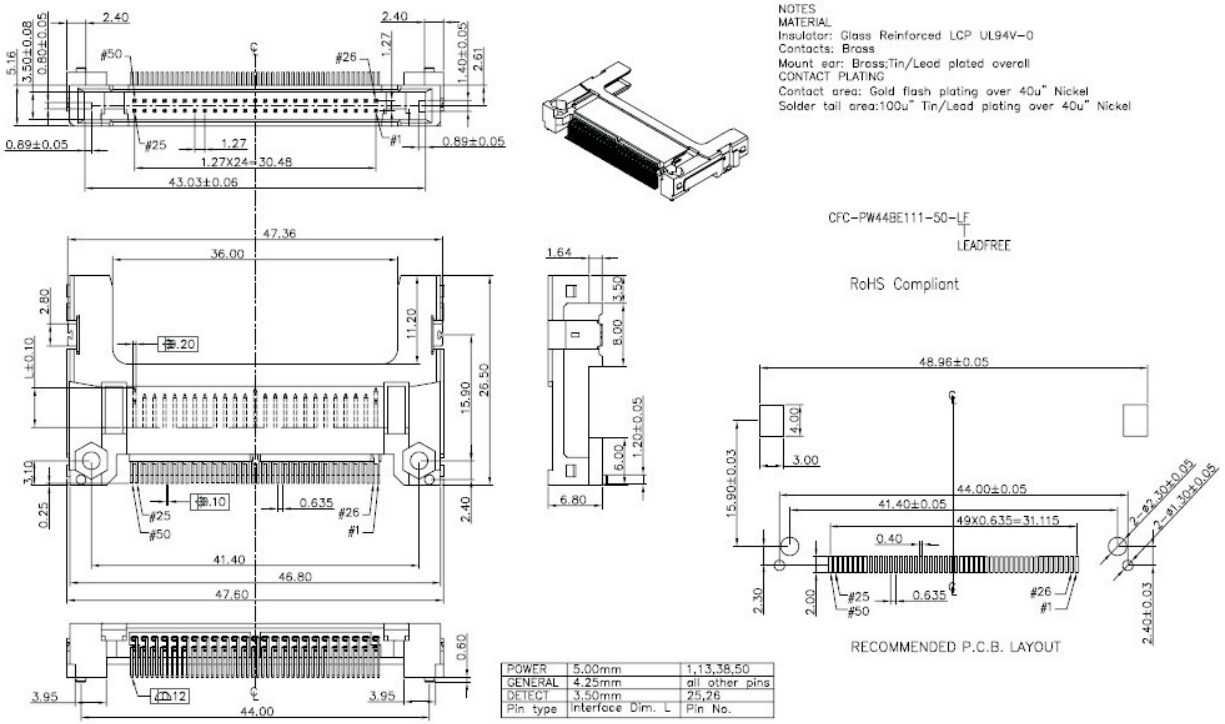

ORDER INFORMATION

Product NO. : KLS1-CF02

Pos. NO.

CF Card male smt 50p

SIM Card and Memory Card Connector

KLS1-CF03 (CF Card male smt 50p)

MATERIAL
Housing :High Temperature Thermoplastic.
Contact: Copper Alloy.
Ped: Brass

PLATING
Contact: Underplated:50u" Min Ni.
Contact area: Select Gold over Ni Plated.
Solder Tail: 100u" min Sn/Pb over Ni Plated
Ped: 100u" min Sn/Pb over 50u" min Ni Plated

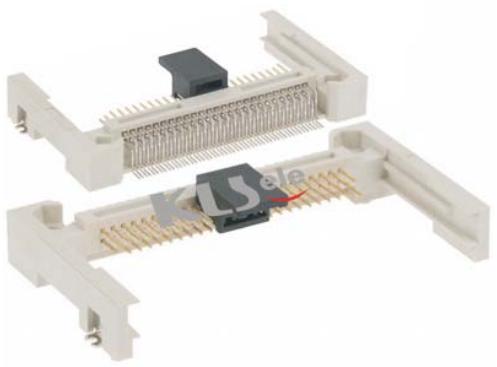

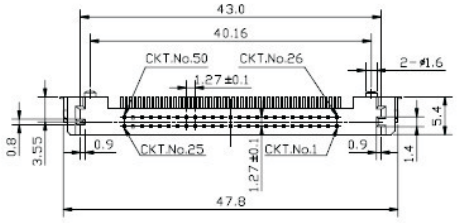

NOTES:
MATERIAL
Insulator:Glass Reinforced LCP UL94V-0
Contacts:Brass Alloy
Mount ear:Brass ; Tin plated overall
CONTACT PLATING
Contact area: Gold plating over 40u" Nickel
Solder tail area:100u" tin plating over 40u" Nickel

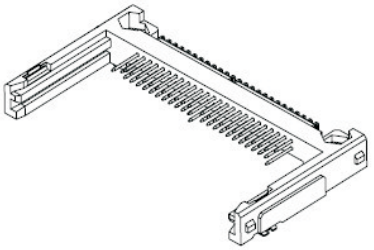

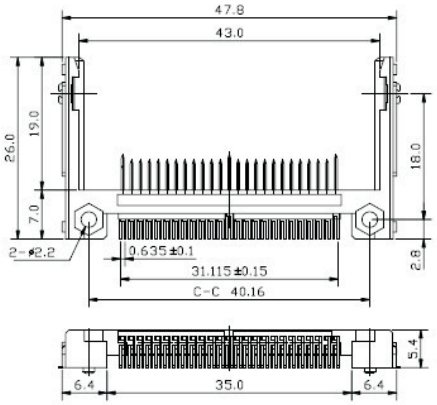

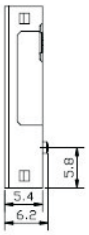

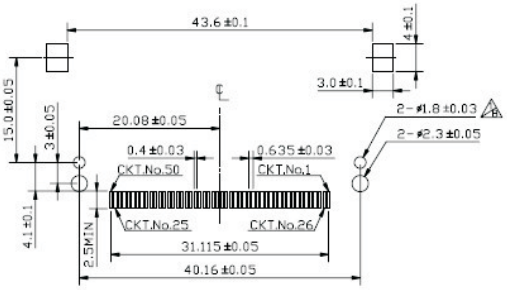

RECOMMENDED P.C.B. LAYOUT

CFC-PW40BE111-50-LF
LEADFREE

ORDER INFORMATION

Product NO. : KLS1-CF03

Pos. NO.
CF Card male smt 50p

Smart Card Connector Series

KLS1-ISC-008A Smart Card Connector

Application scope

- It is mainly applied in water meter, kilowatthour meter, gas meter, IC telephone, gate inhibition and common facilities for reading and writing.



Characteristic

- IC card and wit card correspondent to standard ISO7816
- Totally sealed inside friction type with dust-avoiding door. Elicit with hull wire or flat wire.Eliciting with hull wire takes little space, thickness of the wire: 0.2mm; eliciting with flat wire is cheaper.
- It's convenient to install and fix without soldering.
- deviced with spring piece inside, avoiding destroyed by matters such as iron wire, bamboo tag and so on.
- The spring piece is scientificly designed and shaped with import automatic punching tooling machine. The precision is high, The contact is arranged neatly, elasticity is strong and well-balanced and it is unanimous to feel.
- gold-plating: plate wear-resisting gold in contact with automatic gold-plating assembly line, quality is good and steady.Thickness of plating is several times of common gold-plating and the gritting nature is good.
- The switch is made with the monopoly technic (monopoly No.ZL022.35976.1), disconnection distance is accurate and steady, error is no more than 0.02mm, touch strongly to insure the stability when using.

Instruction

- As for A28, because of the impact of seal loop, we advise installation distance is 26.2mm.
- As for B3, in order to make the surface of card seat in the same level with products, we advise users this size should be 5mm. (3 + distance of encapsulated seal loop = 5mm).
- The length of hull wire is 90mm, the interval is 1.25mm.The length of flat wire is choosable.
- The size of terminal surface: 67.3x12mm
- times of pulling out and inserting> 100,000
- you can choose normal open or normal close.
- This pattern is made by monopoly technic, with protection device and it is a new generation product.

Installation Dimension (unit: mm)

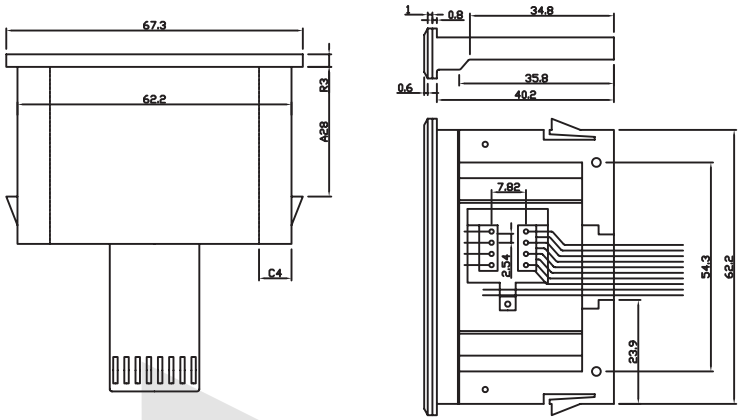

Installation chart of touching point location

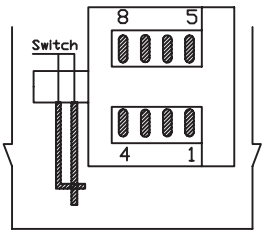

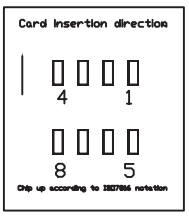

ORDER INFORMATION

Product NO.: KLS1-ISC-008A

- KLS1 — Pos. NO.
- ISC — Smart Card Connector Series
- 008A — Type

Smart Card Connector Series

KLS1-ISC-001A Smart Card Connector

Smart card connector (Narrow style)

Design according to ISO-7816
Ball style contacts, less friction.
copper wires made the switch contacting more stable.
There is contacts protection design, which prevent the disturbing by innormal inserting; Awarding the national patent.
there is Anti-dust door in the card inserting place.Awarding national patent.



Range of applying:

Water meter, Electricity meter, Gas meter, STB, Card reader, IC lock etc.

Construction:

Contacts: Copper wire
Plating: Contact area: Gold over nickle
Terminals: Gold over nickle
Molding: PC

Mechanical data:

Number of contacts: 8
Mechannical life 100000 Cycles Min
Insert force: 1N-5N
Extraction force: 3N-10N
Contact force: 0.2N to 0.6N
shock expriment: After socket shocking, there is no any hurt and also no change between card and switch.

Electrical data:

Insulation resistance: 1000 MOhm Min
Conact resistance: 0.1 Ohm MAX when the switch is closed, resistant between two pins is 0.1 Ohm max
Card detaction swich: Normal open

Environment data:

Operating temperature: -40°C~+85°C
Soldering: Manual
humidity expriment:40°C,90-96 keep 48 hours, no obvious eroding phenomenon.
Salt mist expriment: In the 5% NACL Solution, under 35°C for 48 hours, no obvious eroding phenomenon on the surface of Metal.

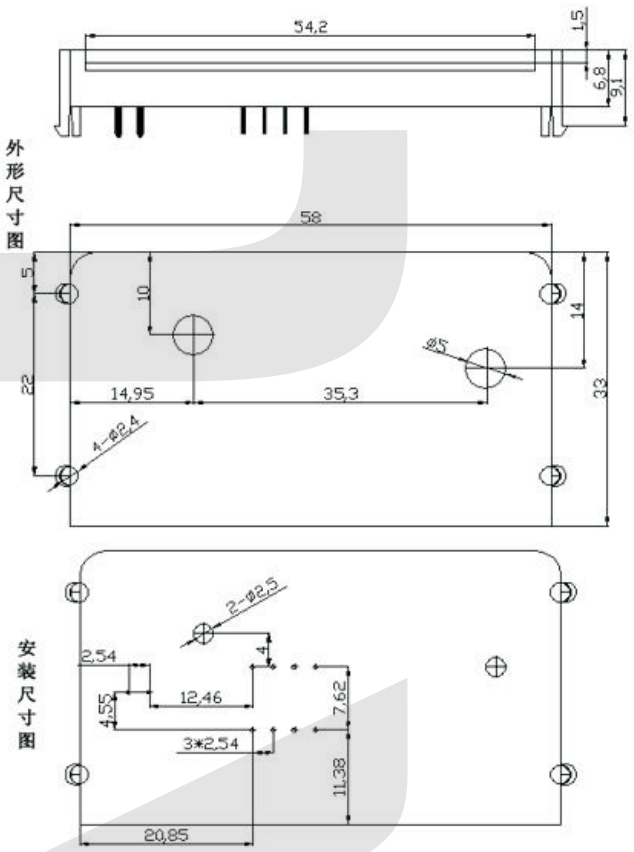

ORDER INFORMATION

Product NO.: KLS1-ISC-001A

Pos. NO.
Smart Card Connector Series
Type

Smart Card Connector Series

I

KLS1-ISC-002A Smart Card Connector

Smart card connector (Narrow style)

Design according to ISO-7816
Ball style contacts, less friction.
copper wires made the switch contacting more stable.
There is contacts protection design, which prevent the disturbing by innormal inserting; Awarding the national patent.
there is Anti-dust door in the card inserting place.Awarding national patent.

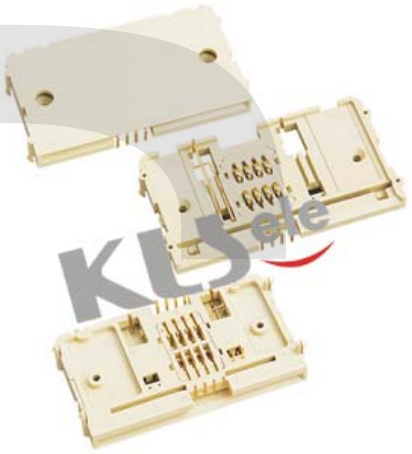

Range of applying:

Water meter, Electricity meter, Gas meter, STB, Card reader, IC lock etc.

Construction:

Contacts: Copper wire
Plating: Contact area: Gold over nickle
Terminals: Gold over nickle
Molding: PC

Mechanical data:

Number of contacts: 8
Mechannical life 100000 Cycles Min
Insert force: 1N-5N
Extraction force: 3N-10N
Contact force: 0.2N to 0.6N
shock expriment: After socket shocking, there is no any hurt and also no change between card and switch.

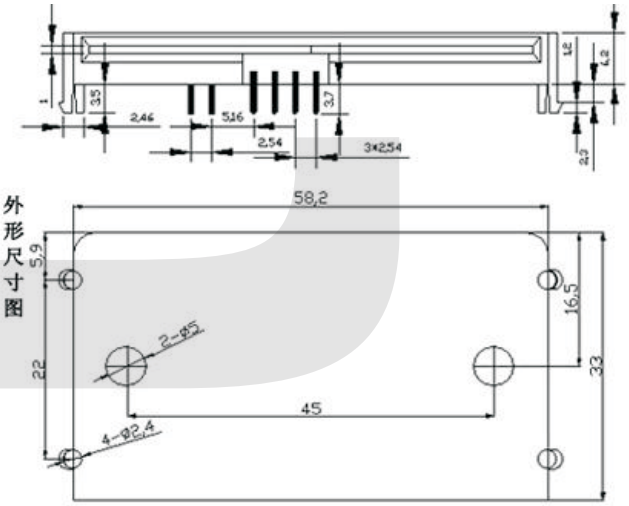

Electrical data:

Insulation resistance: 1000 MOhm Min
Conact resistance: 0.1 Ohm MAX when the switch is closed, resistant between two pins is 0.1 Ohm max
Card detaction swich: Normal open

Environment data:

Operating temperature: -40°C~+85°C
Soldering: Manual
humidity expriment:40°C,90-96 keep 48 hours, no obvious eroding phenomenon.
Salt mist expriment: In the 5% NACL Solution, under 35°C for 48 hours, no obvious eroding phenomenon on the surface of Metal.

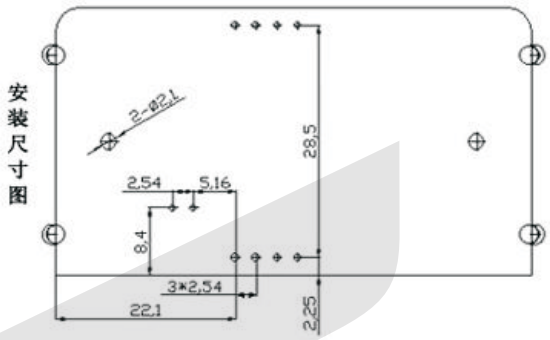

ORDER INFORMATION

Product NO.: KLS1-ISC-002A

Pos. NO.
Smart Card Connector Series
Type

Smart Card Connector Series

KLS1-ISC-003A Smart Card Connector

Smart card connector (Narrow style)

Design according to ISO-7816
Ball style contacts, less friction.
copper wires made the switch contacting more stable.
There is contacts protection design, which prevent the disturbing by innormal inserting; Awarding the national patent.
there is Anti-dust door in the card inserting place.Awarding national patent.

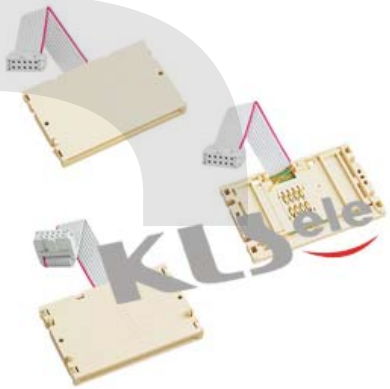

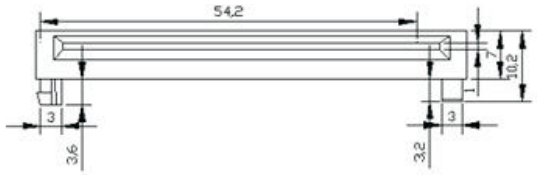

外形尺寸图



安装尺寸图

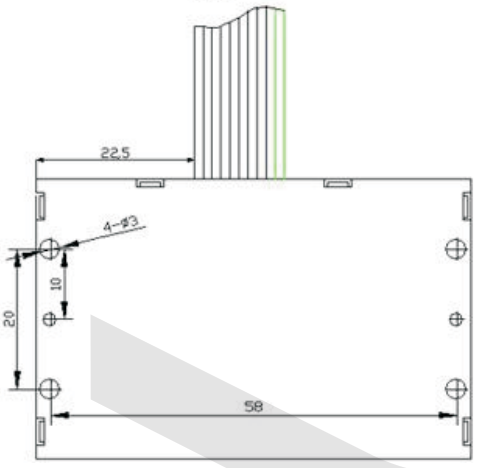

Range of applying:

Water meter, Electricity meter, Gas meter, STB, Card reader, IC lock etc.

Construction:

Contacts: Copper wire
Plating: Contact area: Gold over nickle
Terminals: Gold over nickle
Molding: PC

Mechanical data:

Number of contacts: 8
Mechannical life 100000 Cycles Min
Insert force: 1N-5N
Extraction force: 3N-10N
Contact force: 0.2N to 0.6N
shock expriment: After socket shocking, there is no any hurt and also no change between card and switch.

Electrical data:

Insulation resistance: 1000 MOhm Min
Conact resistance: 0.1 Ohm MAX when the switch is closed, resistant between two pins is 0.1 Ohm max
Card detaction swich: Normal open

Environment data:

Operating temperature: -40ºC~+85ºC
Soldering: Manual
humidity expriment:40ºC,90-96 keep 48 hours, no obvious eroding phenomenon.
Salt mist expriment: In the 5% NACL Solution, under 35ºC for 48 hours, no obvious eroding phenomenon on the surface of Metal.

ORDER INFORMATION

Product NO.: KLS1-ISC-003A

Pos. NO.
Smart Card Connector Series
Type

版次	变更号	设计	日期

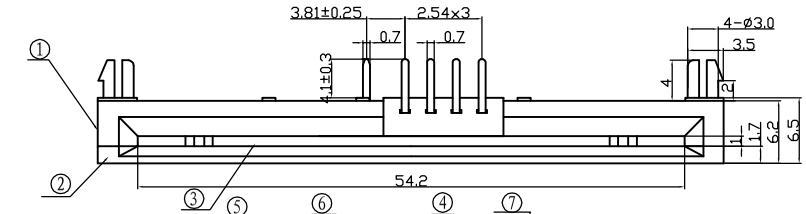

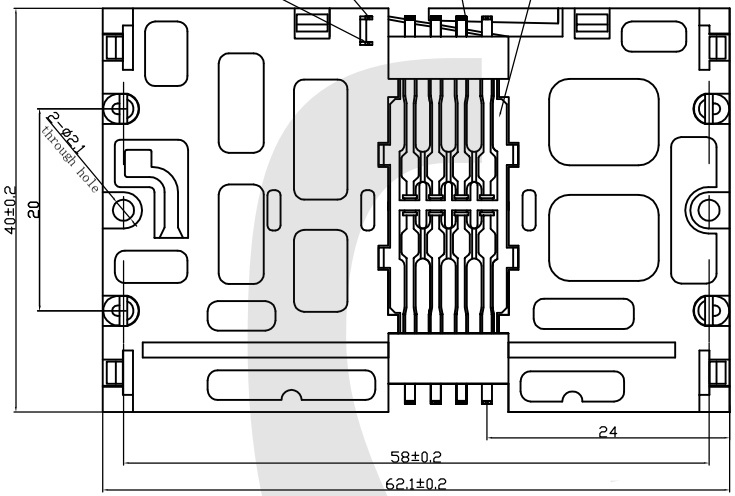

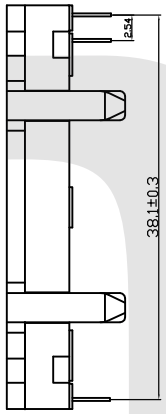

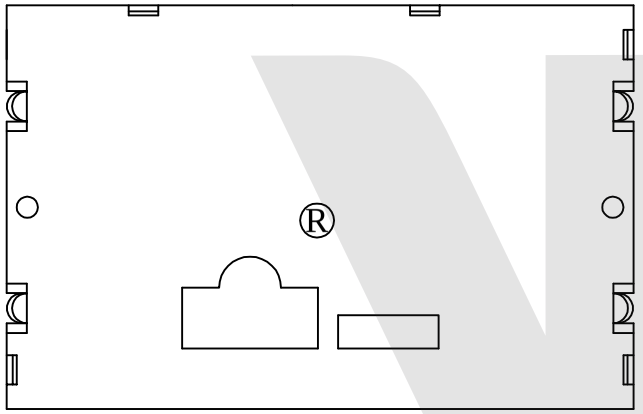

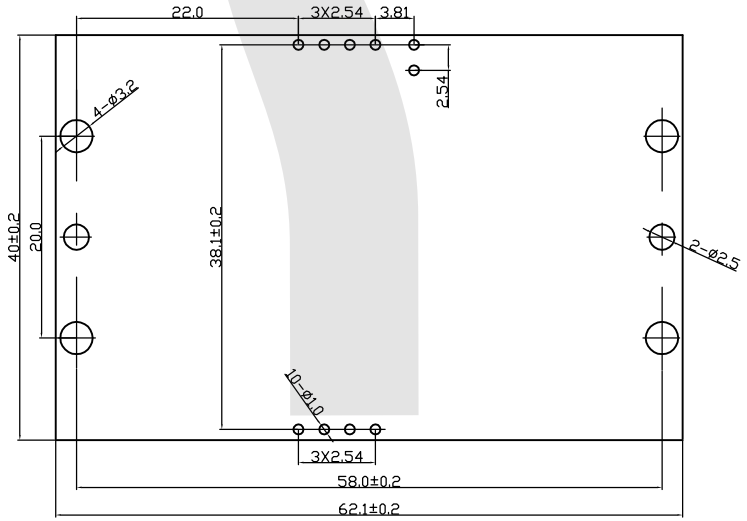

P.C.B Layout

1. 8 pin
2. DIP Type
3. Blade Switch: 1:Normally Open,2: Close

序号	名称	材料	数量	备注
8	小门弹簧	不锈钢	2	
7	扣子	PC	1	黑色
6	小开关	磷铜	1	
5	大开关	磷铜	1	
4	簧片	磷铜	8	底层Ni,表面局部Au
3	小门	PC	1	黑色
2	盖板	PC	1	黑色
1	支架	PC	1	黑色

未注公差			
X.±	0.20	.XXX±	0.05
.X±	0.15	X.°±	1.0°
.XX±	0.10	.X°±	0.5°

设计	
审核	
批准	

名称(Title)
SMART CARD
材料(Material)

KLS Electronic Co; Ltd

图号(Dwg No.)
KLS1-ISC-004A-X

代号(Part No.)
KLS1-ISC-004A

重量	单位	比例	页次	版次
12g	mm	1:1	1/1	A

Smart Card Connector Series

KLS1-ISC-012A (Push-push type) Smart Card Connector

Application scope

- telecommunication, oil machine, control terminal, terminal charge system, automatic saling machine and so on.

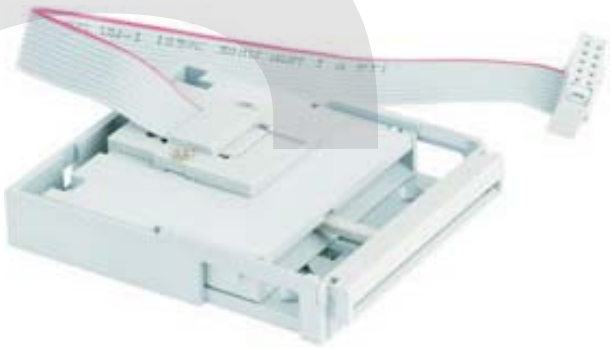

characteristic

- IC card and wit card correspondent to standard ISO7816
- press type, no friction, long time, times of pulling out and inserting > 500,000.
- with sealed door avoiding dust and other matters.
- when finish reading the card, it can be pulled out directly.
- switch is normal open.

Installation chart of touching point location

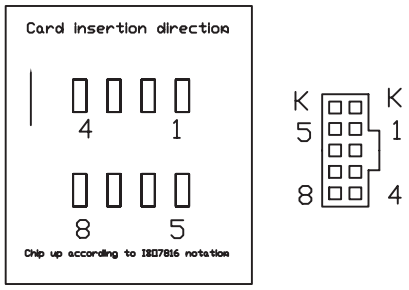

Installation Dimension (unit: mm)

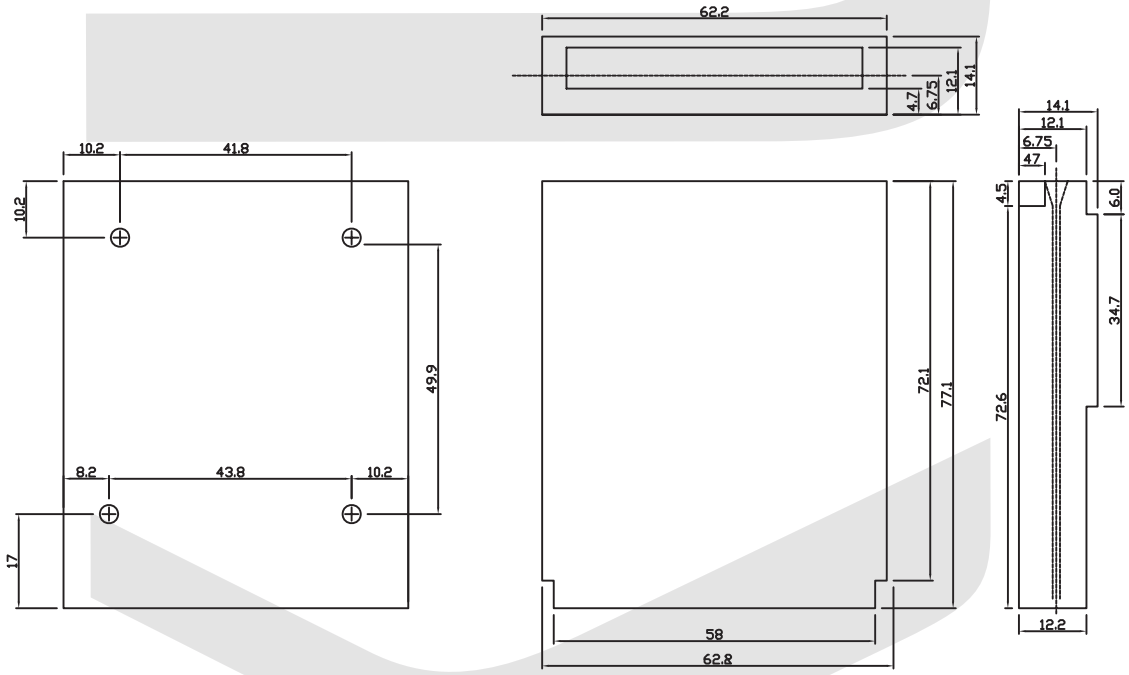

ORDER INFORMATION

Product NO.: KLS1-ISC-012A

Pos. NO.
Smart Card Connector Series
Type

Smart Card Connector Series

KLS1-ISC-013H Smart Card Connector

Application scope

- It is mainly applied in water meter, kilowatt-hour meter, gas meter, IC telephone, gate inhibition, common equipment for reading and writing and so on.



characteristic

- IC card and wit card according to ISO7816 standard.
- outer shape adopts patent technique (00341337.3). With entirely sealed light-friction door inside avoiding other matters. Elicit with flat wire, outer dimension is 62.2 × 40 × 7.1mm.
- It is easy to fix and install without soldering.
- spring piece protection device inside avoiding destroyed by other matters such as iron wire, bamboo tag and so on.
- The spring piece is scientificly designed and shaped with import automatic punching tooling machine. The precision is high, The contact is arranged neatly, elasticity is strong and well-balanced and it is unanimous to feel.
- gold-plating: plate wear-resisting gold in contact with automatic gold-plating assembly line, quality is good and steady.Thickness of plating is several times of common gold-plating and the gritting nature is good.
- The switch is designed and made by patent technique (ZL02 2.35976.1), the disconnection distance is accurate and stable, error is no more than ± 0.02mm, touching power is strong to ensure the stability of operation.
- times of pulling out and inserting> 100,000.

instructiong

- normal open or normal close for option. Recommendation is normal open.
- the length of flat wire is choosable
- This pattern is designed and made by two patent technique with double-protection structure as new generation product.

Installation Dimension (unit: mm)

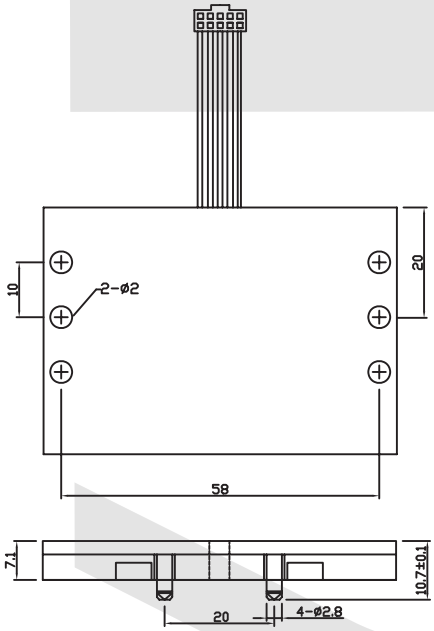

Installation chart of touching point location

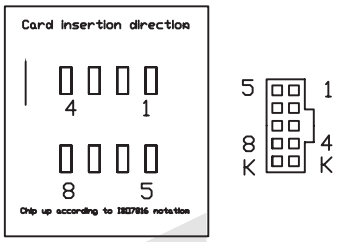

ORDER INFORMATION

Product NO.: KLS1-ISC-013H

Pos. NO.

Smart Card Connector Series

Type

SIM card Connector Series

KLS1-TF-001 T-FLASH PUSH/PUSH Connector Series

I

Material

Housing: LCP UL94V-0
Card button: LCP UL94V-0
Reed tab: Tin-bronze QSn6.5-0.1 GB2066-89
PACKAGE: Tape and Reel Package



Specification

Pitch: 2.54mm
Environmental temperature: -45°C~+85°C
Voltage rating: 100V AC
Current rating: 0.5A Max
Withstand voltage: 200V AC/1Minute
Insulation resistance: ⩾1000MΩ
Contact resistance: ⩽30mΩ
Life: ＞5000 Cycles

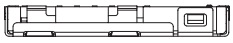

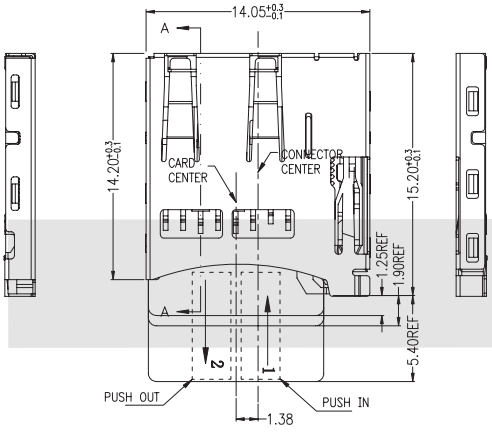

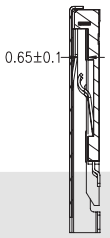

SECTION A–A

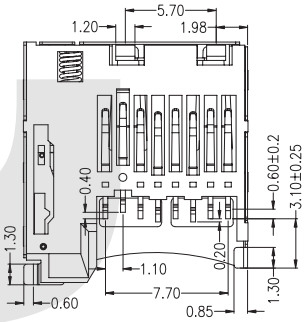



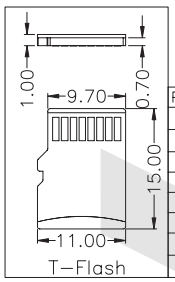

PIN NO.	NAME	YTPE	DESCRIPTION
1	DAT2	I/O/PP	DATE LINE(BIT2)
2	CD/DAT3	I/O/PP	CARD DETECT DATE LIN(BIT3)
3	CMD	PP	COMMAND RESPONSE
4	VDD	S	SUPPLY VOLTAGE
5	CLX	I	CLOCK
6	VSS	S	SUPPLY VOLTAGE GROUND
7	DATO	I/O/PP	DATE LINE(BITO)
8	DAT1	I/O/PP	DATE LINE(DIT1)

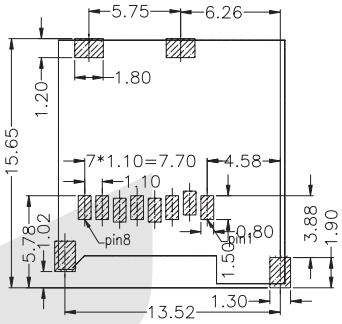

P.C.B HOLE LAYOUT

ORDER INFORMATION

Product NO.: KLS1-TF-001

Pos. NO.
T-FLASH PUSH/PUSH Connector Type

SIM card Connector Series

KLS1-TF-002 T-FLASH Mirco SD Connector Series

I

Material

Housing: LCP UL94V-0
Card button: LCP UL94V-0
Reed tab: Tin-bronze QSn6.5-0.1 GB2066-89
PACKAGE: Tape and Reel Package



Specification

Pitch: 2.54mm
Environmental temperature: -45°C~+85°C
Voltage rating: 100V AC
Current rating: 0.5A Max
Withstand voltage: 200V AC/1Minute
Insulation resistance: ⩾1000MΩ
Contact resistance: ⩽30mΩ
Life: ＞5000 Cycles

PIN NO.	NAME	TYPE[1]	DESCRIPTION
1	DAT2	I/O/PP	Data Line [bit2]
2	CD/DAT3	I/O/PP	Card Detect Data Line [bit3]
3	CMD	PP	Command Response
4	VDD	S	Supply Votage
5	CLK	I	Clock
6	VSS	S	Supply Voltage Ground
7	DAT0	I/O/PP	Data Line [bit0]
8	DAT1[2]	I/O/PP	Data Line [bit1]

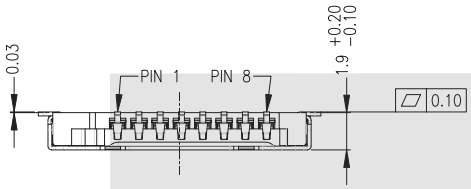

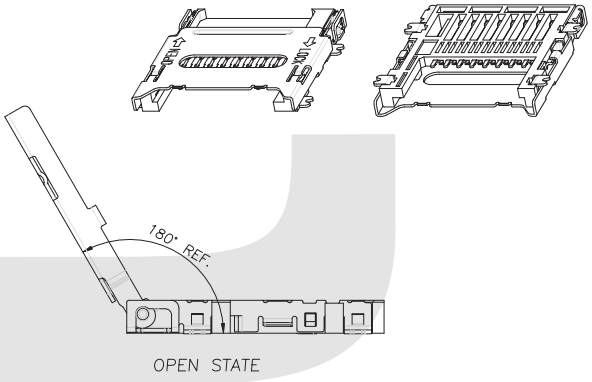

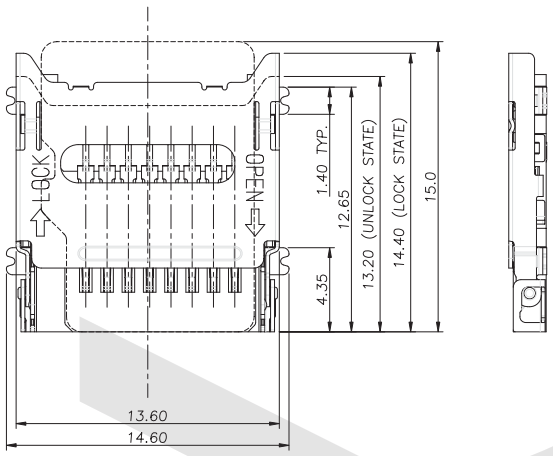

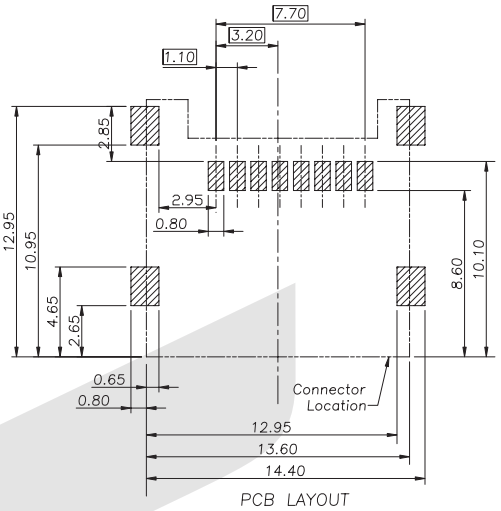

ORDER INFORMATION

Product NO.: KLS1-TF- 002

Pos. NO.

T-FLASH Mirco SD Connector Type

SIM Card and Memory Card Connector

KLS1-SIM-002



Application scope: Mainly applies in copies the table system wireless, grasps POS machine, memory key management special-purpose and other intelligence recognition system.

Uses Fan Dian especially:

1. conforms to ISO7816-2.
2. conforms to GSM11.11, the external dimensions 30L 1 7.2W 2 .3Hmm.
3. 6 needles renovate the type, brings the switch, the contact effect to be good, the volume is small, easy installation.
4. the product divides into the manual welding and the backflow welds, for customer choice.

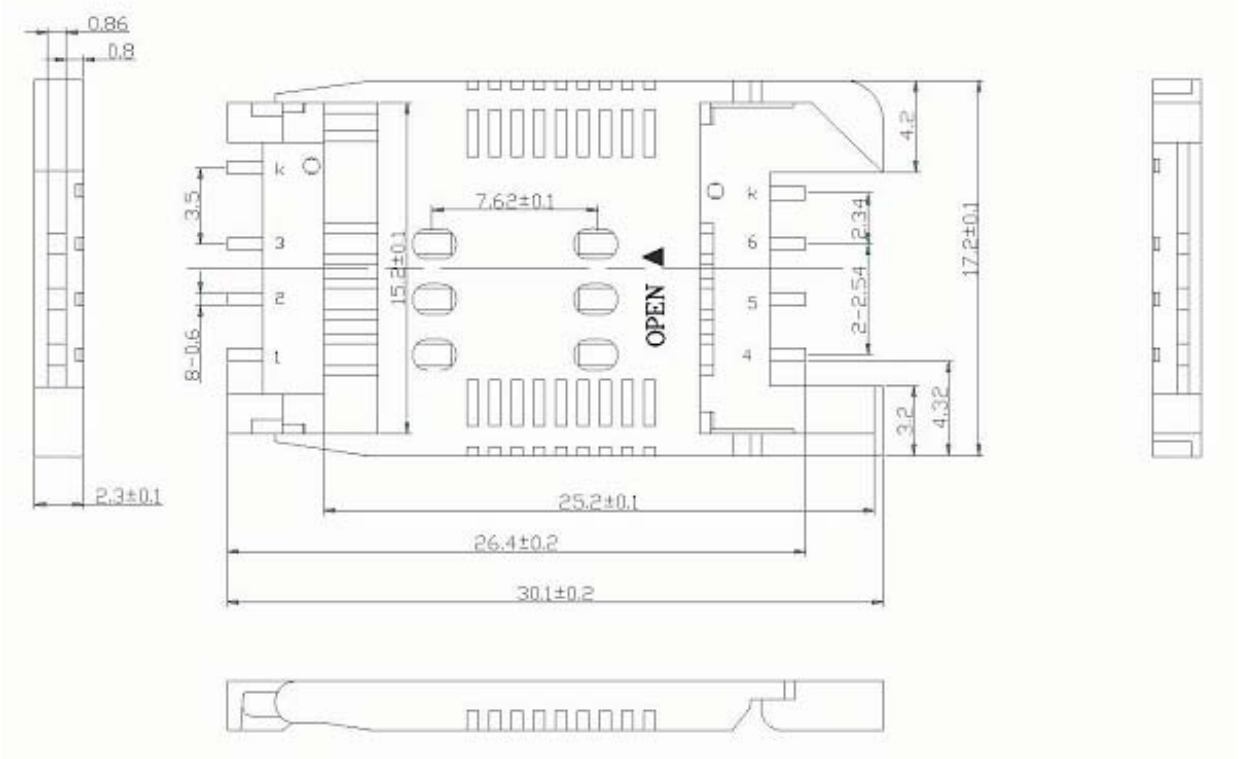

ORDER INFORMATION

Product NO. : KLS1-SIM-002-6P

Pos. NO.

6P
8P

KLS electronic
www.cnkls.com

I

SIM card Connector Series

KLS1-SIM-010-6P SIM Card Connector Series

Material

Housing: LCP UL94V-0
Card button: LCP UL94V-0
Reed tab: Tin-bronze QSn6.5-0.1 GB2066-89
PACKAGE: Tape and Reel Package

Specification

Pitch: 2.54mm
Environmental temperature: -45°C~+85°C
Voltage rating: 100V AC
Current rating: 0.5A Max
Withstand voltage: 200V AC/1Minute
Insulation resistance: ⩾1000MΩ
Contact resistance: ⩽30mΩ
Life: ＞5000 Cycles

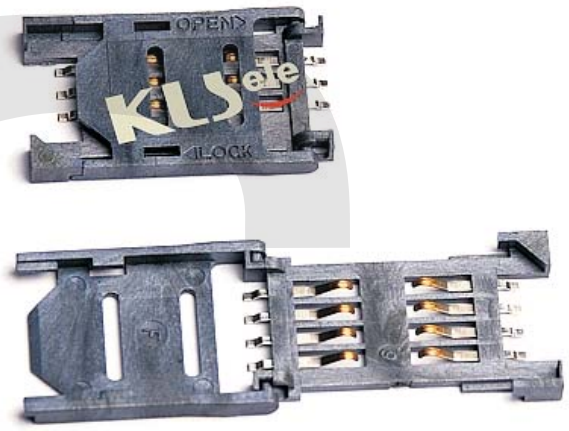

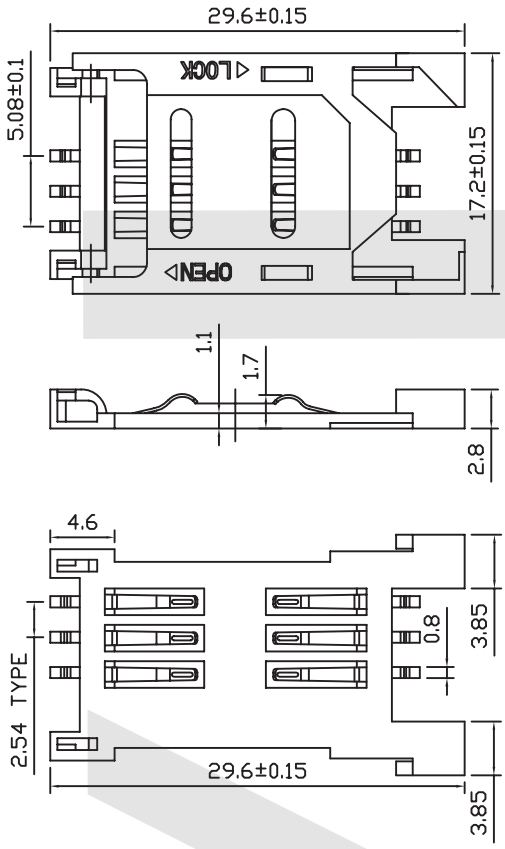

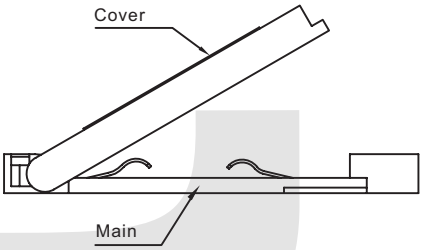

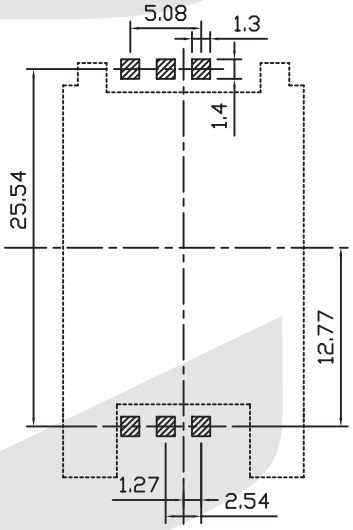

ORDER INFORMATION

Product NO.: KLS1-SIM-010-6P-1

Pos. NO.
SIM Card Connector Type
Pin Number: 6P or 8P
1-Without peg 0-With peg

KLS electronic
www.cnkls.com

I

SIM card Connector Series

KLS1-SIM-010-6P SIM Card Connector Series

Material

Housing: LCP UL94V-0
Card button: LCP UL94V-0
Reed tab: Tin-bronze QSn6.5-0.1 GB2066-89
PACKAGE: Tape and Reel Package

Specification

Pitch: 2.54mm
Environmental temperature: -45°C~+85°C
Voltage rating: 100V AC
Current rating: 0.5A Max
Withstand voltage: 200V AC/1Minute
Insulation resistance: ⩾1000MΩ
Contact resistance: ⩽30mΩ
Life: ＞5000 Cycles

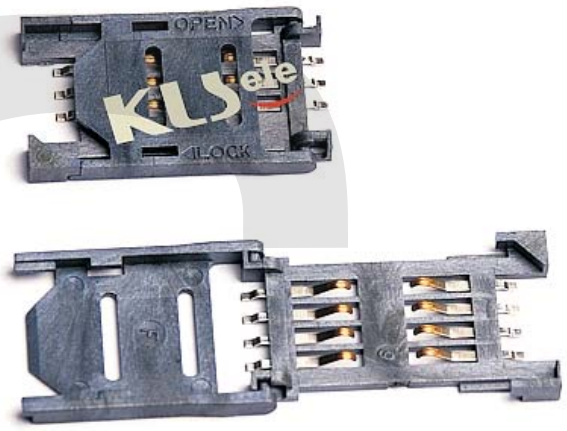

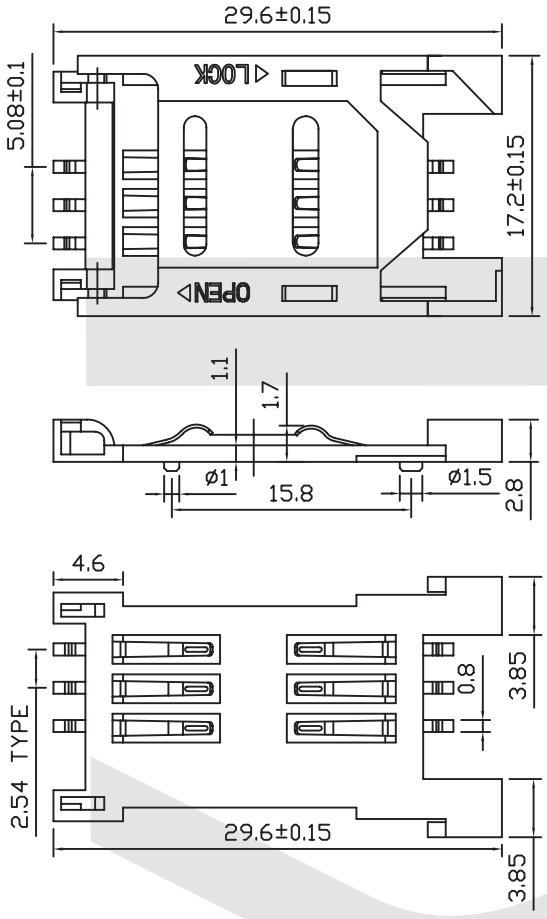

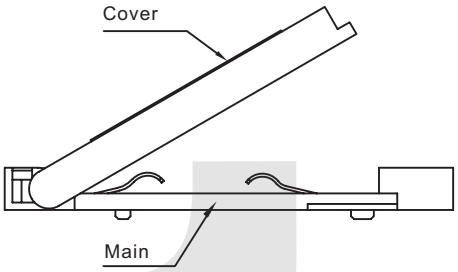

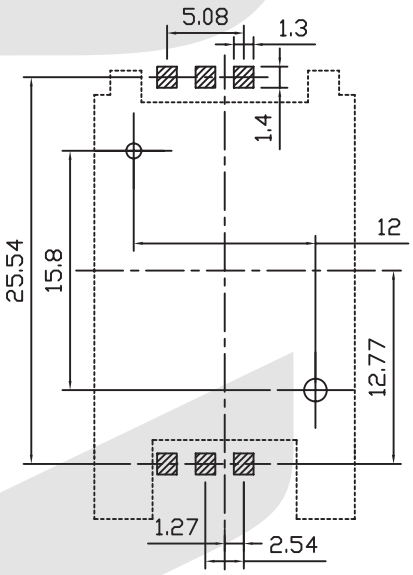

ORDER INFORMATION

Product NO.: KLS1-SIM-010-6P-0

Pos. NO.
SIM Card Connector Type
1-Without peg 0-With peg
Pin Number: 6P or 8P

SIM card Connector Series

KLS1-SIM-010-8P SIM Card Connector Series

I

Material

Housing: LCP UL94V-0
Card button: LCP UL94V-0
Reed tab: Tin-bronze QSn6.5-0.1 GB2066-89
PACKAGE: Tape and Reel Package

Specification

Pitch: 2.54mm
Environmental temperature: -45°C~+85°C
Voltage rating: 100V AC
Current rating: 0.5A Max
Withstand voltage: 200V AC/1Minute
Insulation resistance: ⩾1000MΩ
Contact resistance: ⩽30mΩ
Life: ＞5000 Cycles

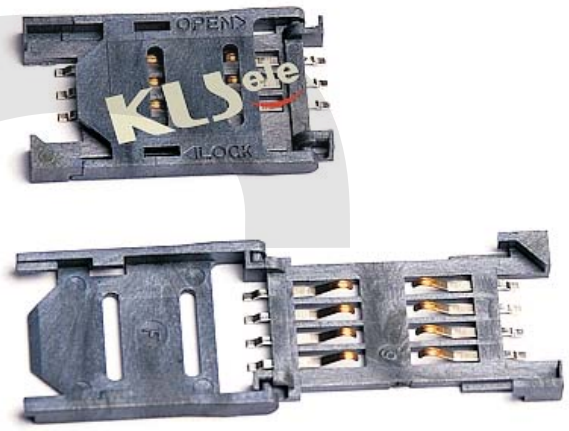

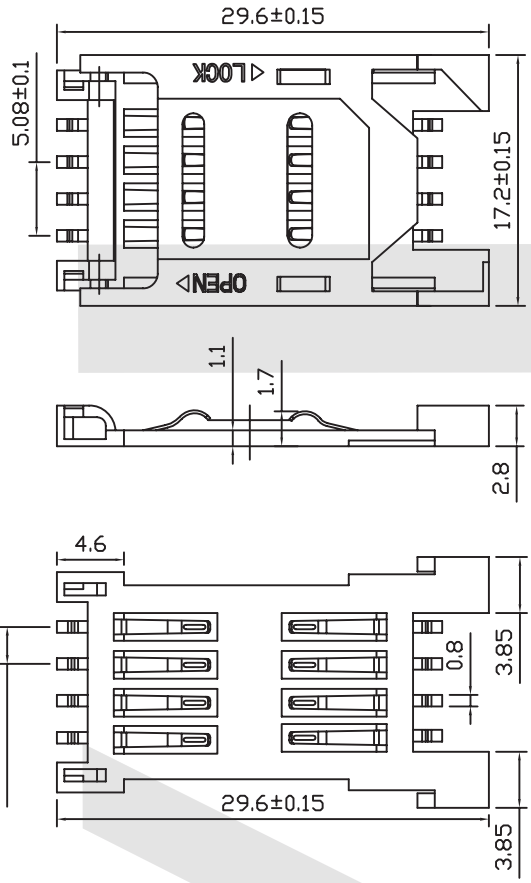

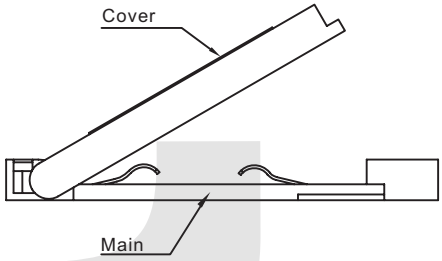

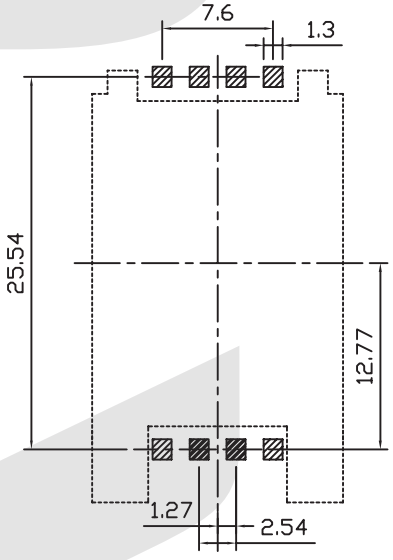

ORDER INFORMATION

Product NO.: KLS1-SIM-010-8P-1

Pos. NO.
SIM Card Connector Type
1-Without peg 0-With peg
Pin Number: 6P or 8P

SIM card Connector Series

KLS1-SIM-010-8P SIM Card Connector Series

Material

Housing: LCP UL94V-0
Card button: LCP UL94V-0
Reed tab: Tin-bronze QSn6.5-0.1 GB2066-89
PACKAGE: Tape and Reel Package

Specification

Pitch: 2.54mm
Environmental temperature: -45°C~+85°C
Voltage rating: 100V AC
Current rating: 0.5A Max
Withstand voltage: 200V AC/1Minute
Insulation resistance: ⩾1000MΩ
Contact resistance: ⩽30mΩ
Life: ＞5000 Cycles

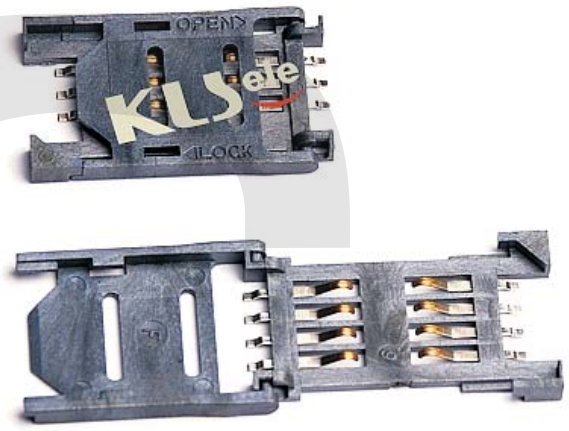

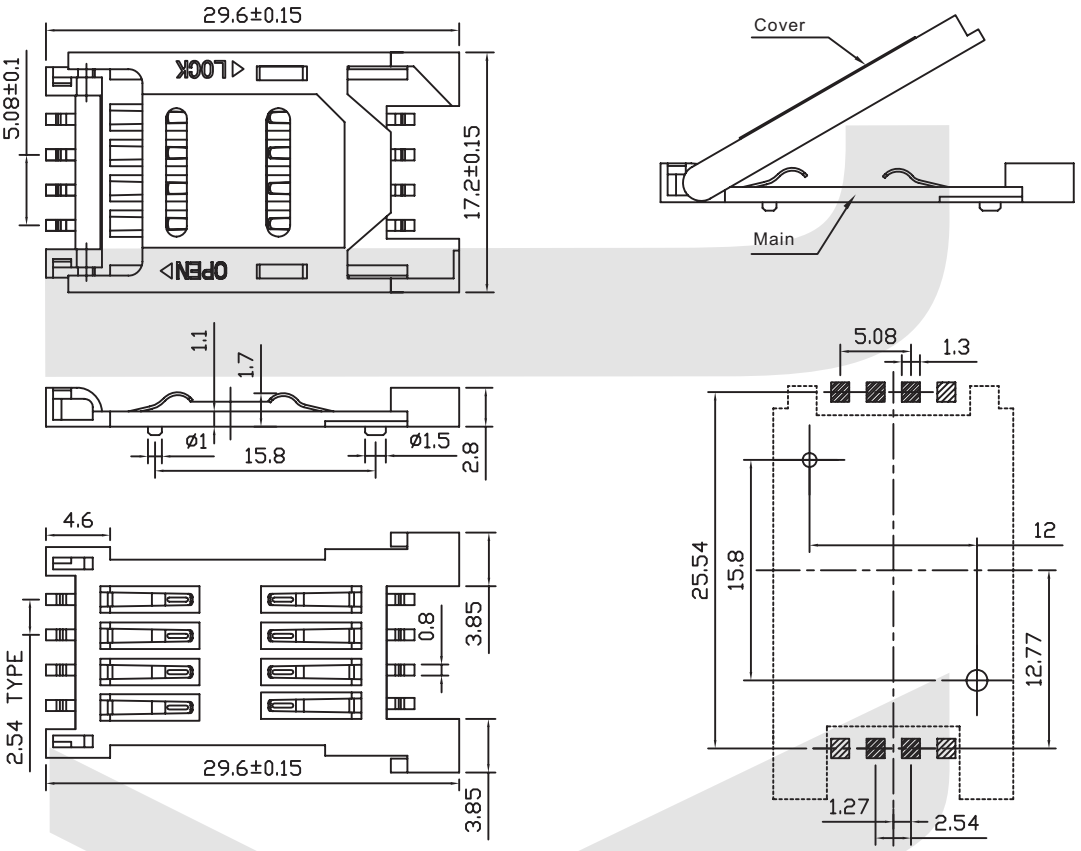

ORDER INFORMATION

Product NO.: KLS1-SIM-010-8P-0

Pos. NO.
SIM Card Connector Type
Pin Number: 6P or 8P
1-Without peg
0-With peg

SIM card Connector Series

KLS1-SIM-011-6P/8P SIM Card Connector Series

Material

Housing: LCP UL94V-0
Card button: LCP UL94V-0
Reed tab: Tin-bronze QSn6.5-0.1 GB2066-89
PACKAGE: Tape and Reel Package

Specification

Pitch: 2.54mm
Environmental temperature: -45°C~+85°C
Voltage rating: 100V AC
Current rating: 0.5A Max
Withstand voltage: 200V AC/1Minute
Insulation resistance: ⩾1000MΩ
Contact resistance: ⩽30mΩ
Life: ＞5000 Cycles



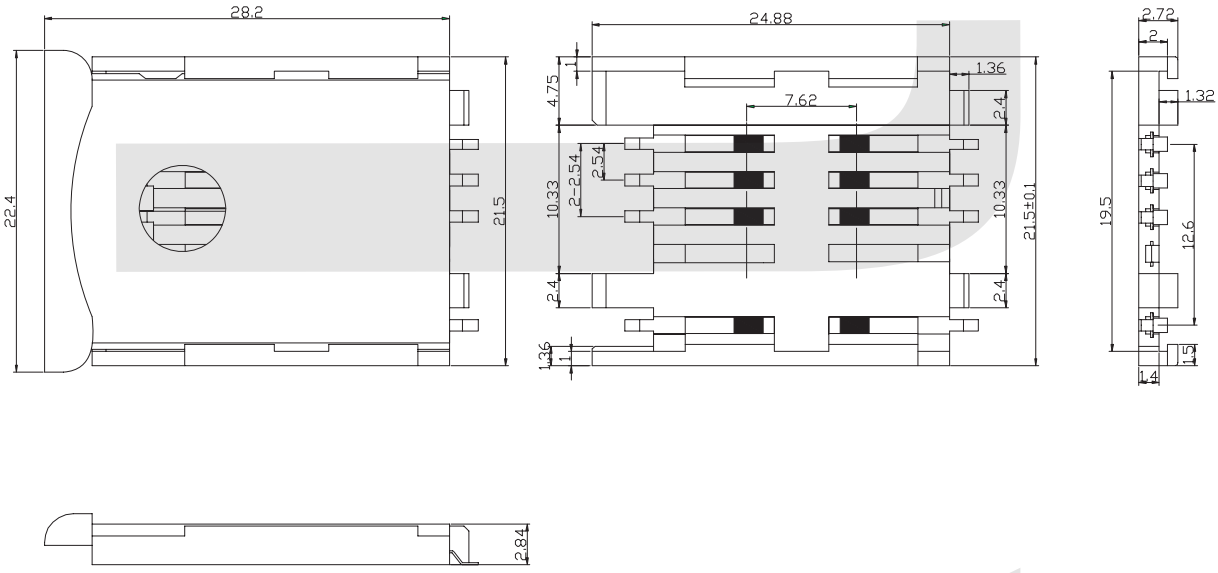

ORDER INFORMATION

Product NO.: KLS1-SIM-011-6P

Pos. NO.
SIM Card Connector Type
Pin Number: 6P or 8P

SIM card Connector Series

KLS1-SIM-012-6P/8P SIM Card Connector Series

I

Material

Housing: LCP UL94V-0
Card button: LCP UL94V-0
Reed tab: Tin-bronze QSn6.5-0.1 GB2066-89
PACKAGE: Tape and Reel Package



Specification

Pitch: 2.54mm
Environmental temperature: -45°C~+85°C
Voltage rating: 100V AC
Current rating: 0.5A Max
Withstand voltage: 200V AC/1Minute
Insulation resistance: ⩾1000MΩ
Contact resistance: ⩽30mΩ
Life: ＞5000 Cycles

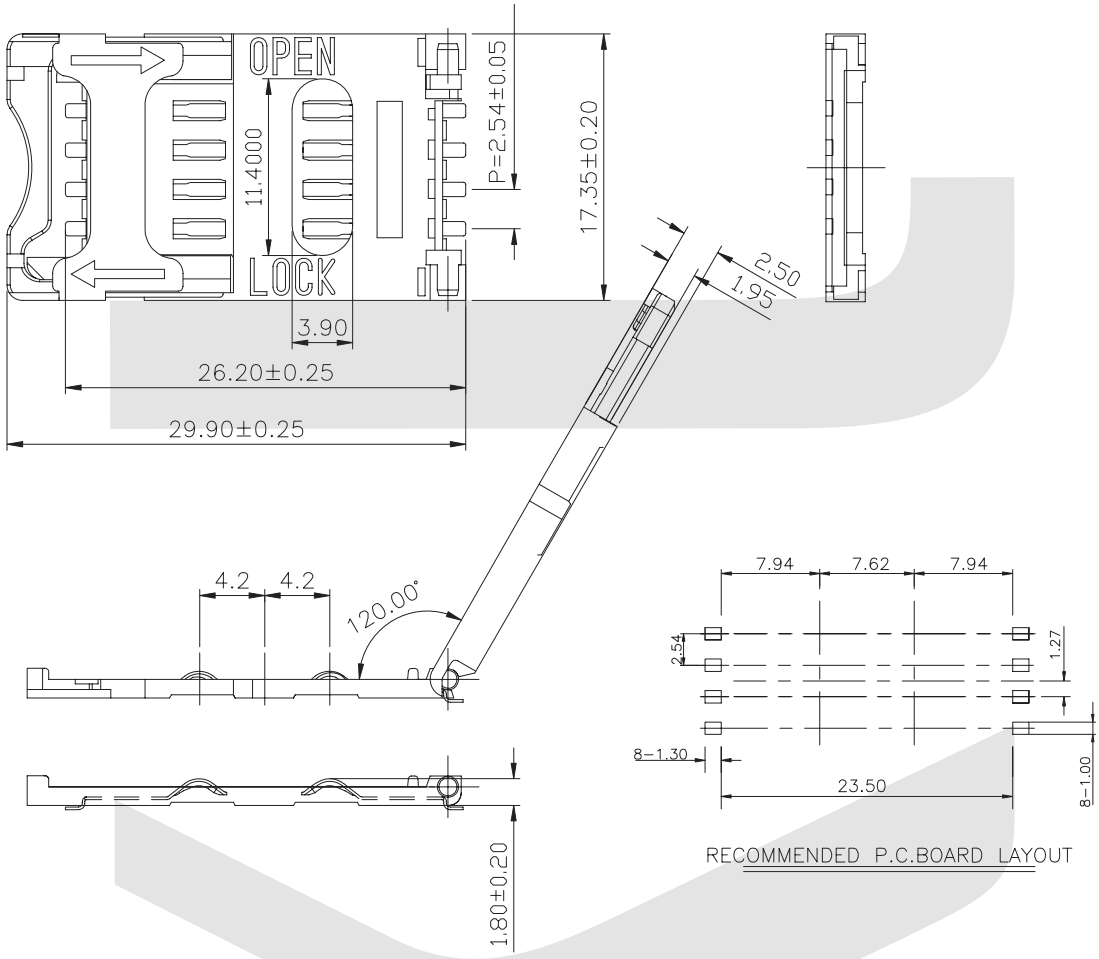

ORDER INFORMATION

Product NO.: KLS1-SIM-012-6P

Pos. NO.
SIM Card Connector Type
Pin Number: 6P or 8P

KLS electronic
www.cnkls.com

SIM card Connector Series

KLS1-SIM-013-6P SIM Card Connector Series

I

Material

Housing: LCP UL94V-0
Card button: LCP UL94V-0
Reed tab: Tin-bronze QSn6.5-0.1 GB2066-89
PACKAGE: Tape and Reel Package



Specification

Pitch: 2.54mm
Environmental temperature: -45°C~+85°C
Voltage rating: 100V AC
Current rating: 0.5A Max
Withstand voltage: 200V AC/1Minute
Insulation resistance: ⩾1000MΩ
Contact resistance: ⩽30mΩ
Life: ＞5000 Cycles

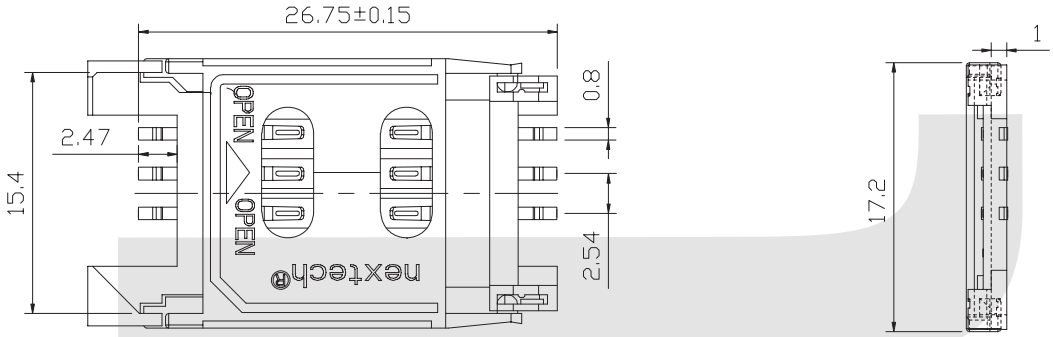

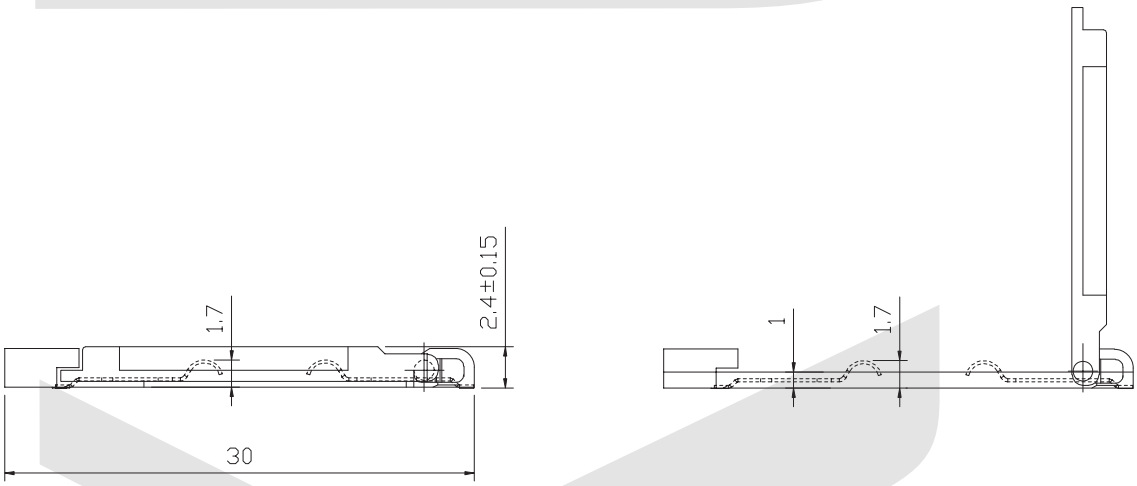

ORDER INFORMATION

Product NO.: KLS1-SIM- 013 - 6P - 1

Pos. NO.
SIM Card Connector Type
1-Without peg 0-With peg
Pin Number: 6P or 8P

All specification & dimensions are subject to change,please call your nearest KLS sales represesntative for update information

KLS electronic
www.cnkls.com

I

SIM card Connector Series

KLS1-SIM-013-6P SIM Card Connector Series

Material

Housing: LCP UL94V-0
Card button: LCP UL94V-0
Reed tab: Tin-bronze QSn6.5-0.1 GB2066-89
PACKAGE: Tape and Reel Package



Specification

Pitch: 2.54mm
Environmental temperature: -45°C~+85°C
Voltage rating: 100V AC
Current rating: 0.5A Max
Withstand voltage: 200V AC/1Minute
Insulation resistance: ⩾1000MΩ
Contact resistance: ⩽30mΩ
Life: ＞5000 Cycles

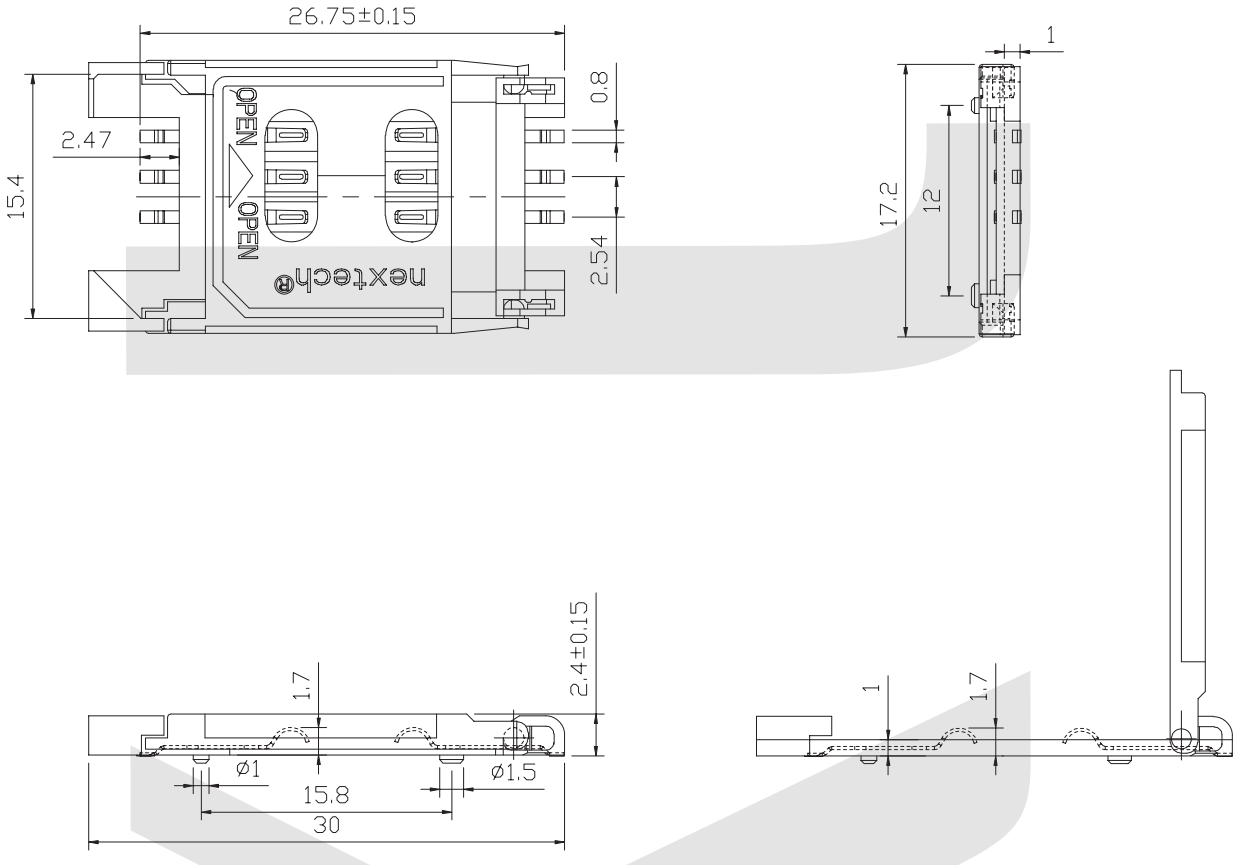

ORDER INFORMATION

Product NO.: KLS1-SIM-013-6P-0

Pos. NO.
SIM Card Connector Type
Pin Number: 6P or 8P
1-Without peg 0-With peg

KLS electronic
www.cnkls.com

I

SIM card Connector Series

KLS1-SIM-013-8P SIM Card Connector Series

Material

Housing: LCP UL94V-0
Card button: LCP UL94V-0
Reed tab: Tin-bronze QSn6.5-0.1 GB2066-89
PACKAGE: Tape and Reel Package



Specification

Pitch: 2.54mm
Environmental temperature: -45°C~+85°C
Voltage rating: 100V AC
Current rating: 0.5A Max
Withstand voltage: 200V AC/1Minute
Insulation resistance: ⩾1000MΩ
Contact resistance: ⩽30mΩ
Life: ＞5000 Cycles

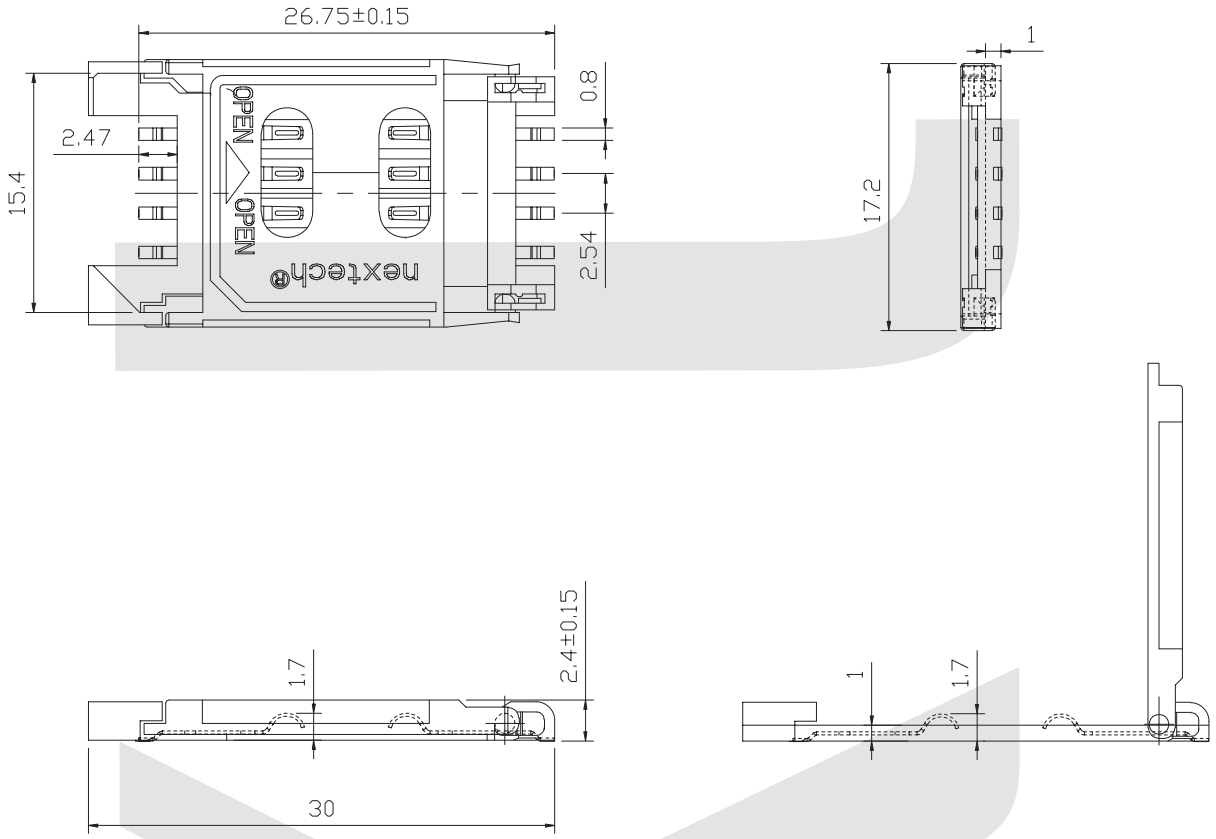

ORDER INFORMATION

Product NO.: KLS1-SIM-013-8P-1

Pos. NO.
SIM Card Connector Type
Pin Number: 6P or 8P
1-Without peg 0-With peg

KLS electronic
www.cnkls.com

I

SIM card Connector Series

KLS1-SIM-013-8P SIM Card Connector Series

Material

Housing: LCP UL94V-0
Card button: LCP UL94V-0
Reed tab: Tin-bronze QSn6.5-0.1 GB2066-89
PACKAGE: Tape and Reel Package



Specification

Pitch: 2.54mm
Environmental temperature: -45°C~+85°C
Voltage rating: 100V AC
Current rating: 0.5A Max
Withstand voltage: 200V AC/1Minute
Insulation resistance: ⩾1000MΩ
Contact resistance: ⩽30mΩ
Life: >5000 Cycles

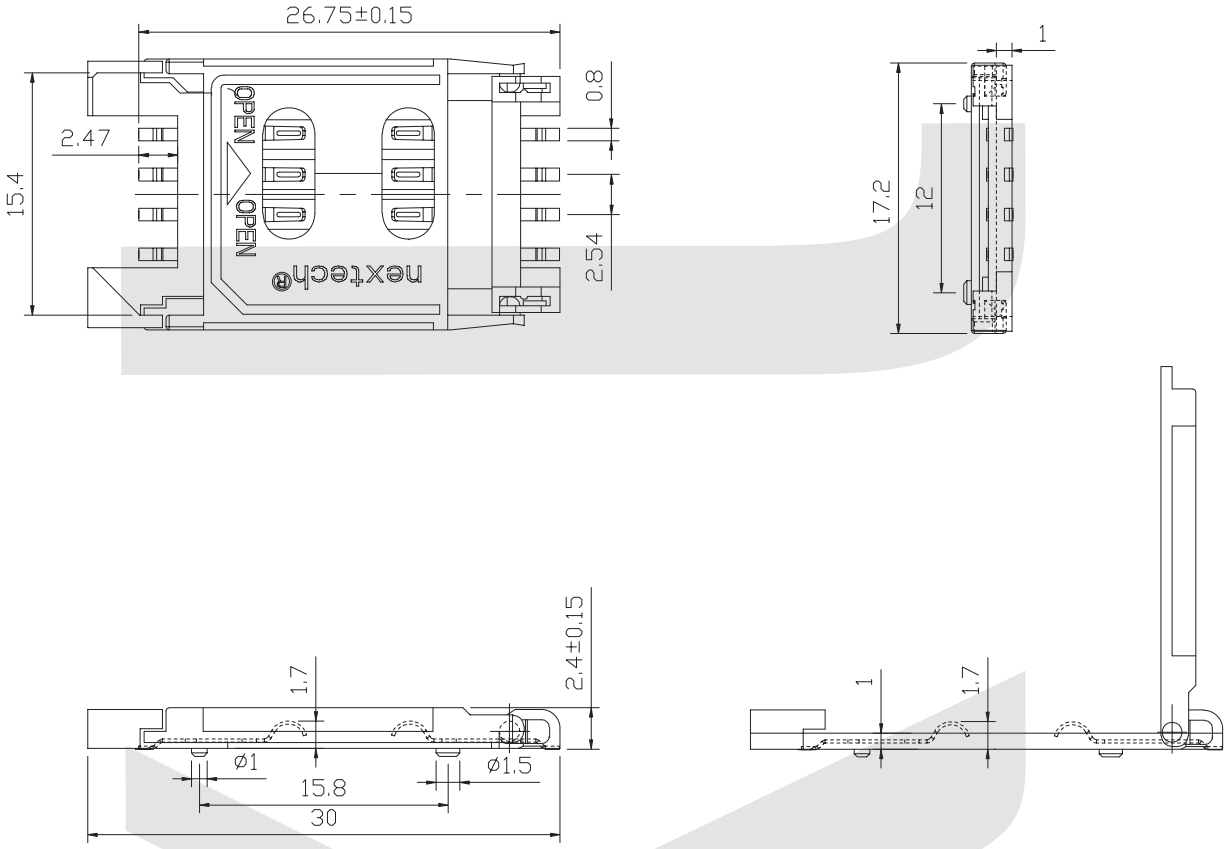

ORDER INFORMATION

Product NO.: KLS1-SIM-013-8P-0

Pos. NO.
SIM Card Connector Type
Pin Number: 6P or 8P
1-Without peg 0-With peg

SIM card Connector Series

KLS1-SIM-014-6P /8P SIM Card Connector Series

Material

1.Housing: LCP UL 94V-0 , Color: Black
2.Contact: Phosphor Bronze
3.Plating:
Contact area: min 30u "(0.75μm) Au over min 60u" (1.5μm) Ni
Solder area: min 1u "(0.025μm) Au over min 60u" (1.5μm) Ni
And to cope with sealing
4.Hold Down: Phosphor bronze
Plating: min 1u "(0.025μm) Gold flash over min 60u" (1.5μm) Ni
And to cope with sealing

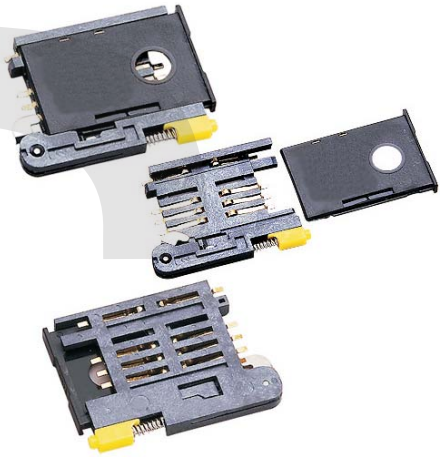

Specification

1. Current 10mA (AC.DC) Max.
2. Voltage 5V (AC.DC)
3. Durability 10,000 mating cycles
4. Dielectric Withstanding voltage: 500V AC RMS for one minute
5. Insulation resistance: 1000 M Ohms Min. At 500V AC
6. Contact resistance: 30M Ohms Max.

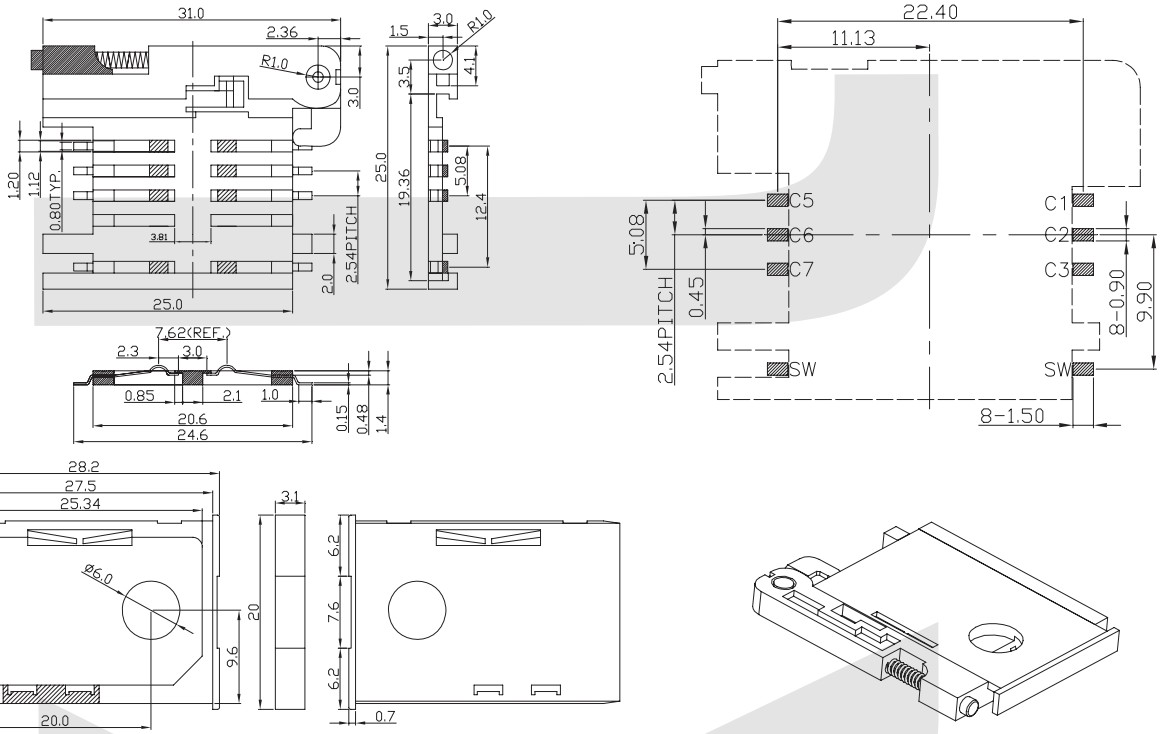

ORDER INFORMATION

Product NO.: KLS1-SIM- 014 - 6P

Pos. NO.
SIM Card Connector Type
Pin Number

I

SIM card Connector Series

KLS1-SIM-015-6P SIM Card Connector Series

Material

1.Housing: LCP UL 94V-0 , Color: Black
2.Contact: Phosphor Bronze
3.Plating:
Contact area: min 30u "(0.75μm) Au over min 60u" (1.5μm) Ni
Solder area: min 1u "(0.025μm) Au over min 60u" (1.5μm) Ni
And to cope with sealing
4.Hold Down: Phosphor bronze
Plating: min 1u "(0.025μm) Gold flash over min 60u" (1.5μm) Ni
And to cope with sealing



Specification

1. Current 10mA (AC.DC) Max.
2. Voltage 5V (AC.DC)
3. Durability 10,000 mating cycles
4. Dielectric Withstanding voltage: 500V AC RMS for one minute
5. Insulation resistance: 1000 M Ohms Min. At 500V AC
6. Contact resistance: 30M Ohms Max.

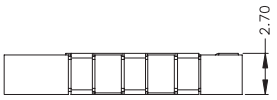

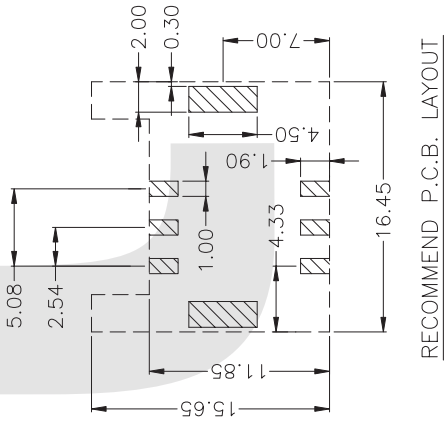

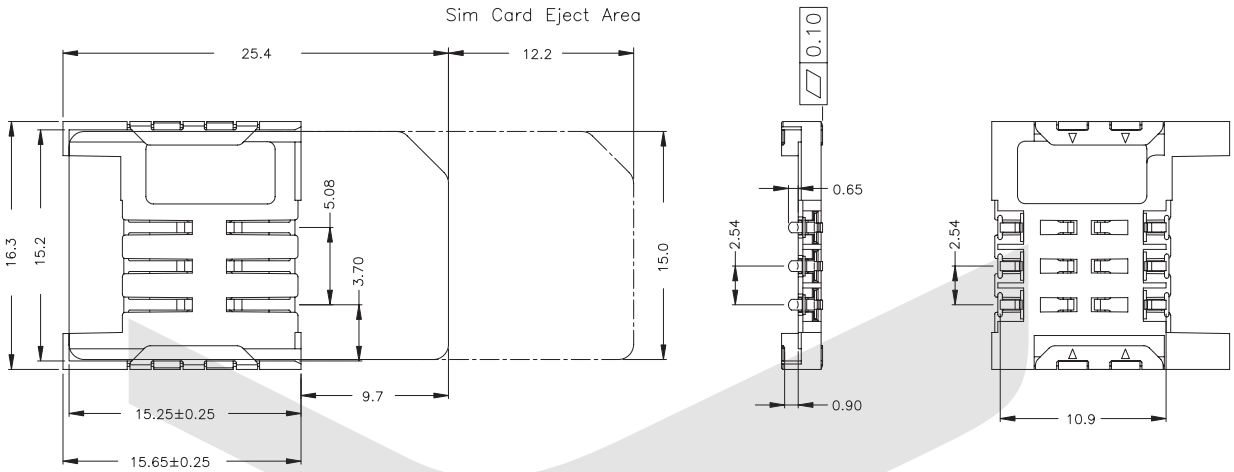

ORDER INFORMATION

Product NO.: KLS1-SIM-015-6P-H1

Pos. NO.
SIM Card Connector Type
Pin Number
Height: H1=1.8 H2=2.2 H3=2.5 H4=2.7 H5=3.0

KLS electronic
www.cnkls.com

SIM card Connector Series

KLS1-SIM-015-8P SIM Card Connector Series

I

Material

1.Housing: LCP UL 94V-0 , Color: Black
2.Contact: Phosphor Bronze
3.Plating:
Contact area: min 30u "(0.75μm) Au over min 60u" (1.5μm) Ni
Solder area: min 1u "(0.025μm) Au over min 60u" (1.5μm) Ni
And to cope with sealing
4.Hold Down: Phosphor bronze
Plating: min 1u "(0.025μm) Gold flash over min 60u" (1.5μm) Ni
And to cope with sealing



Specification

1. Current 10mA (AC.DC) Max.
2. Voltage 5V (AC.DC)
3. Durability 10,000 mating cycles
4. Dielectric Withstanding voltage: 500V AC RMS for one minute
5. Insulation resistance: 1000 M Ohms Min. At 500V AC
6. Contact resistance: 30M Ohms Max.

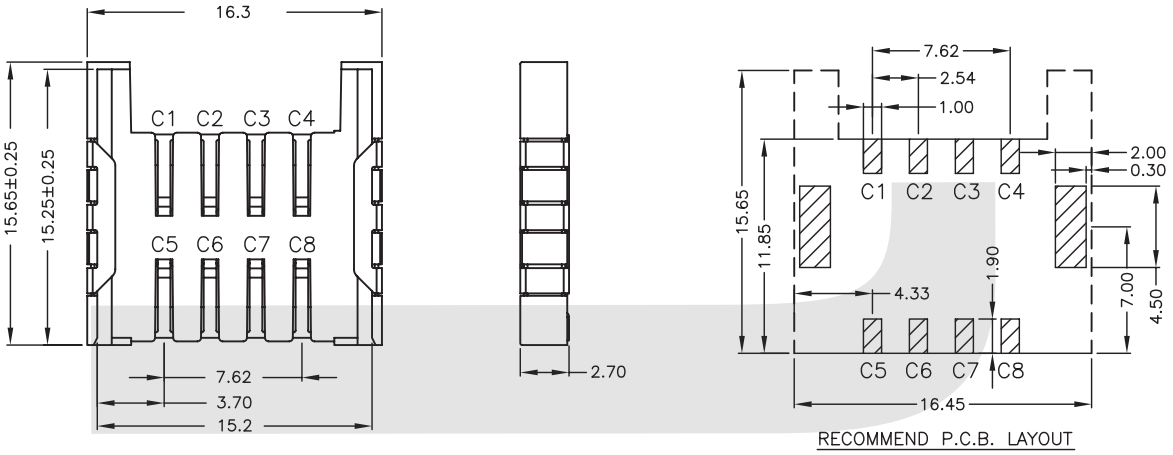

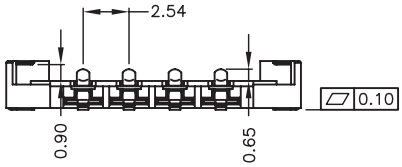

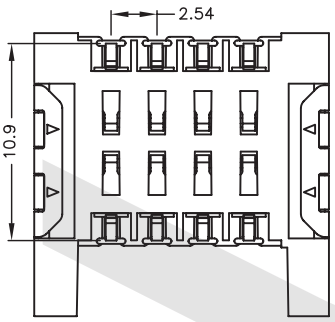

SIM CARD PINOUT		
PIN NO.	NAME	DESCRIPTION
C1	VCC	+5V OR 3.3V DC
C2	RST	CARD RESET (POTIONAL)
C3	CLK	CARD CLOCK
C4	AS	APPLICATION SPECIFIC
C5	GND	GROUND
C6	VPP	+21V DC
C7	I/O	IN/OUT
C8	AS	APPLICATION SPECIFIC

ORDER INFORMATION

Product NO.: KLS1-SIM-015-8P-H1

Pos. NO.
SIM Card Connector Type
Pin Number
Height: H1=1.8 H2=2.2 H3=2.5 H4=2.7 H5=3.0

KLS electronic
www.cnkls.com

I

SIM card Connector Series

KLS1-SIM-016-6P SIM Card Connector Series

Material

1.Housing: LCP UL 94V-0 , Color: Black
2.Contact: Phosphor Bronze
3.Plating:
Contact area: min 30u "(0.75μm) Au over min 60u" (1.5μm) Ni
Solder area: min 1u "(0.025μm) Au over min 60u" (1.5μm) Ni
And to cope with sealing
4.Hold Down: Phosphor bronze
Plating: min 1u "(0.025μm) Gold flash over min 60u" (1.5μm) Ni
And to cope with sealing

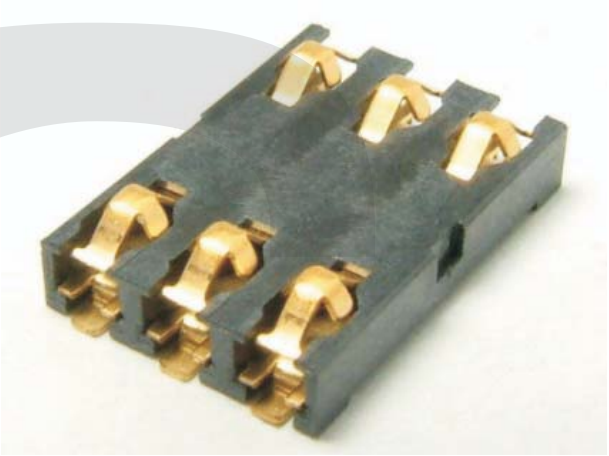

Specification

1. Current 10mA (AC.DC) Max.
2. Voltage 5V (AC.DC)
3. Durability 10,000 mating cycles
4. Dielectric Withstanding voltage: 500V AC RMS for one minute
5. Insulation resistance: 1000 M Ohms Min. At 500V AC
6. Contact resistance: 30M Ohms Max.

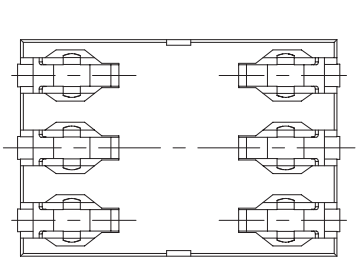

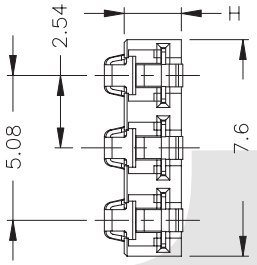

H1	1.5mm
H2	1.8mm
H3	2.0mm
H4	2.2mm
H5	2.5mm
H6	2.6mm

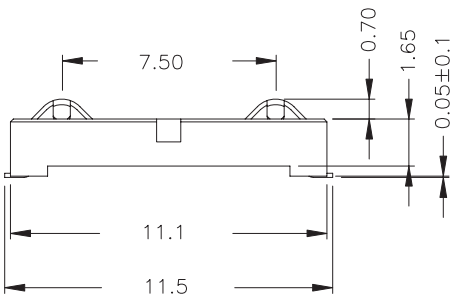

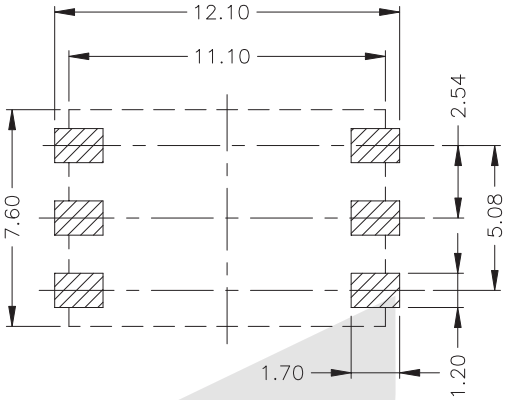

RECOMMEND P.C.B. LAYOUT

ORDER INFORMATION

Product NO.: KLS1-SIM-016-6P-H1

Pos. NO.
SIM Card Connector Type
Height
Pin Number

SIM card Connector Series

KLS1-SIM-016-8P SIM Card Connector Series

Material

1.Housing: LCP UL 94V-0 , Color: Black
2.Contact: Phosphor Bronze
3.Plating:
Contact area: min 30u "(0.75μm) Au over min 60u" (1.5μm) Ni
Solder area: min 1u "(0.025μm) Au over min 60u" (1.5μm) Ni
And to cope with sealing
4.Hold Down: Phosphor bronze
Plating: min 1u "(0.025μm) Gold flash over min 60u" (1.5μm) Ni
And to cope with sealing

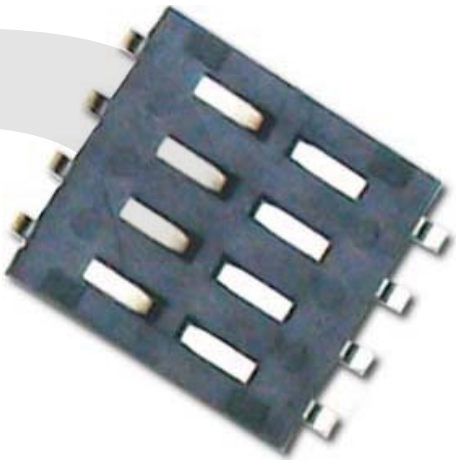

Specification

1. Current 10mA (AC.DC) Max.
2. Voltage 5V (AC.DC)
3. Durability 10,000 mating cycles
4. Dielectric Withstanding voltage: 500V AC RMS for one minute
5. Insulation resistance: 1000 M Ohms Min. At 500V AC
6. Contact resistance: 30M Ohms Max.

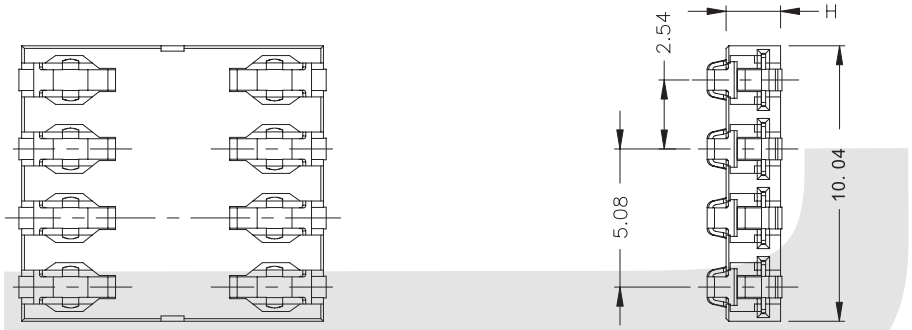

H1	1.5mm
H2	1.8mm
H3	2.0mm
H4	2.2mm
H5	2.5mm
H6	2.6mm

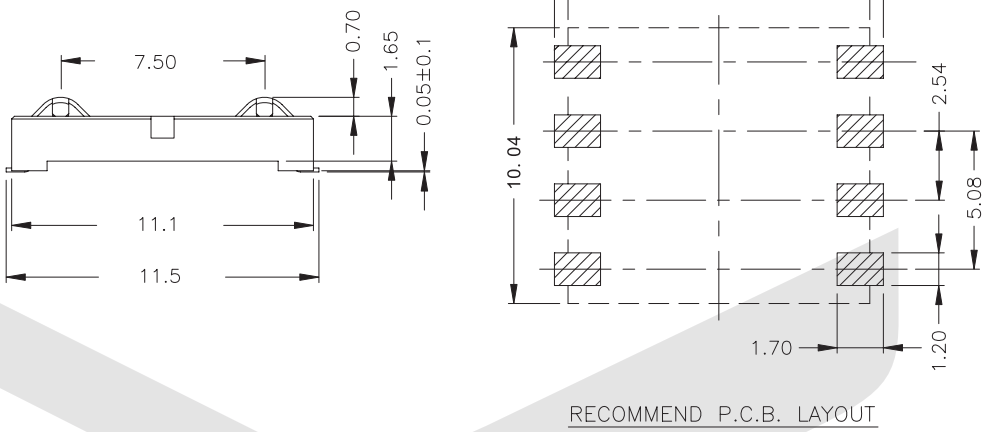

RECOMMEND P.C.B. LAYOUT

ORDER INFORMATION

Product NO.: KLS1-SIM- 016 - 8P - H1

Pos. NO.
SIM Card Connector Type
Height
Pin Number

SIM card Connector Series

KLS1-SIM-017-6P SIM Card Connector Series

Material

1.Housing: LCP UL 94V-0 , Color: Black
2.Contact: Phosphor Bronze
3.Plating:
Contact area: min 30u "(0.75μm) Au over min 60u" (1.5μm) Ni
Solder area: min 1u "(0.025μm) Au over min 60u" (1.5μm) Ni
And to cope with sealing
4.Hold Down: Phosphor bronze
Plating: min 1u "(0.025μm) Gold flash over min 60u" (1.5μm) Ni
And to cope with sealing

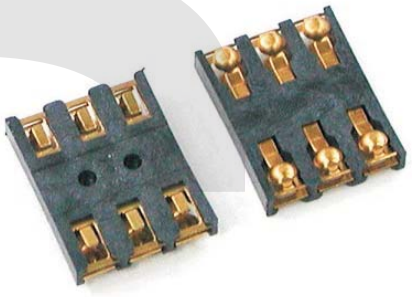

Specification

1. Current 10mA (AC.DC) Max.
2. Voltage 5V (AC.DC)
3. Durability 10,000 mating cycles
4. Dielectric Withstanding voltage: 500V AC RMS for one minute
5. Insulation resistance: 1000 M Ohms Min. At 500V AC
6. Contact resistance: 30M Ohms Max.

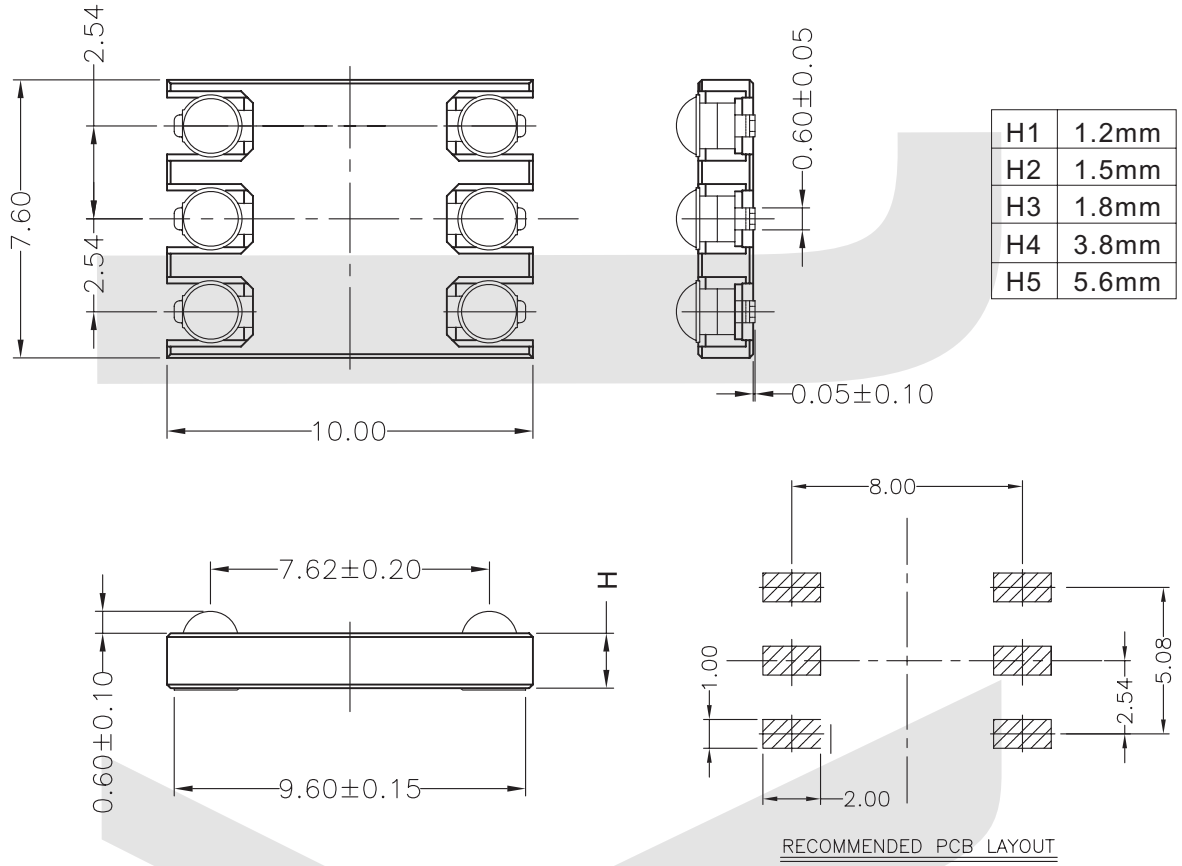

H1	1.2mm
H2	1.5mm
H3	1.8mm
H4	3.8mm
H5	5.6mm

ORDER INFORMATION

Product NO.: KLS1-SIM-017-6P-H1

Pos. NO.
SIM Card Connector Type
Pin Number
Height

SIM card Connector Series

KLS1-SIM-018-6P SIM Card Connector Series

Material

1.Housing: LCP UL 94V-0 , Color: Black
2.Contact: Phosphor Bronze
3.Plating:
Contact area: min 30u "(0.75μm) Au over min 60u" (1.5μm) Ni
Solder area: min 1u "(0.025μm) Au over min 60u" (1.5μm) Ni
And to cope with sealing
4.Hold Down: Phosphor bronze
Plating: min 1u "(0.025μm) Gold flash over min 60u" (1.5μm) Ni And to cope with sealing



Specification

1. Current 10mA (AC.DC) Max.
2. Voltage 5V (AC.DC)
3. Durability 10,000 mating cycles
4. Dielectric Withstanding voltage: 500V AC RMS for one minute
5. Insulation resistance: 1000 M Ohms Min. At 500V AC
6. Contact resistance: 30M Ohms Max.

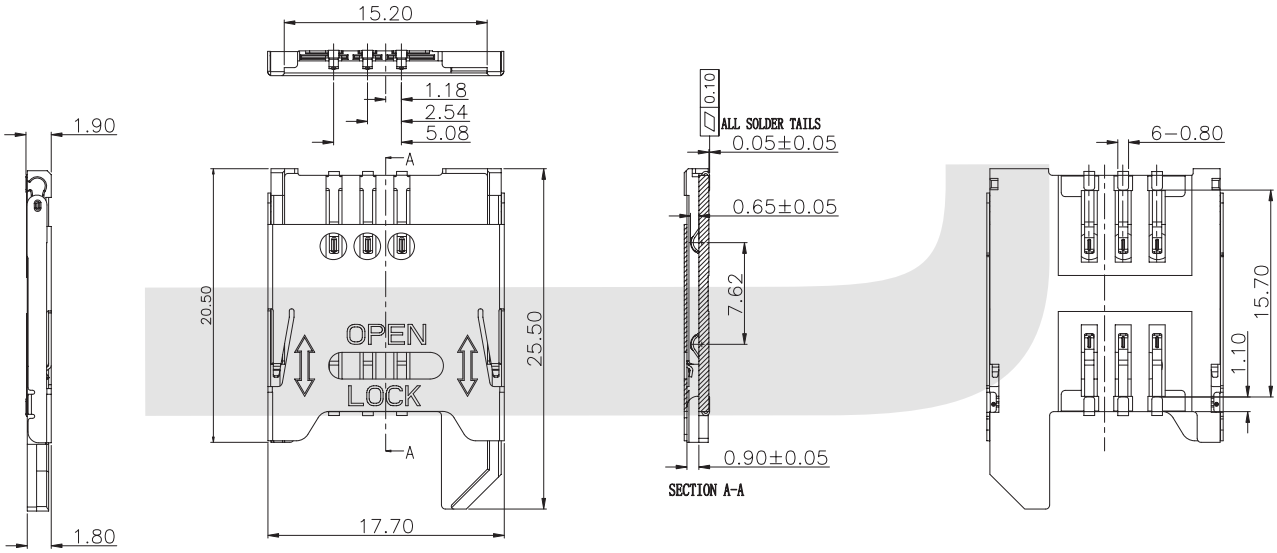

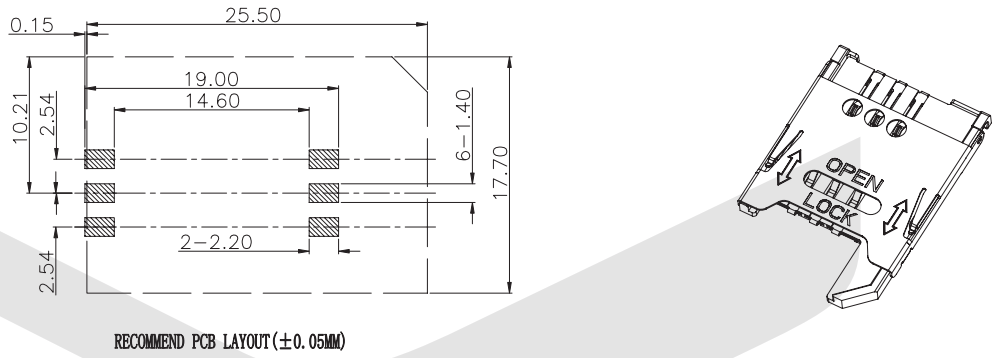

ORDER INFORMATION

Product NO.: KLS1-SIM-018-6P

Pos. NO.
SIM Card Connector Type
Pin Number

KLS electronic
www.cnkls.com

I

SIM card Connector Series

KLS1-SIM-019-6P SIM Card Connector Series

Material

Housing: LCP UL94V-0
Card button: LCP UL94V-0
Reed tab: Tin-bronze QSn6.5-0.1 GB2066-89
PACKAGE: Tape and Reel Package

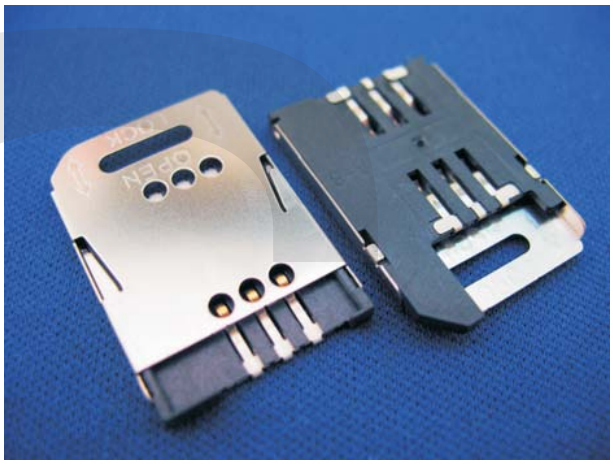

Specification

Pitch: 2.54mm
Environmental temperature: -45°C~+85°C
Voltage rating: 100V AC
Current rating: 0.5A Max
Withstand voltage: 200V AC/1Minute
Insulation resistance: ⩾1000MΩ
Contact resistance: ⩽30mΩ
Life: ＞5000 Cycles

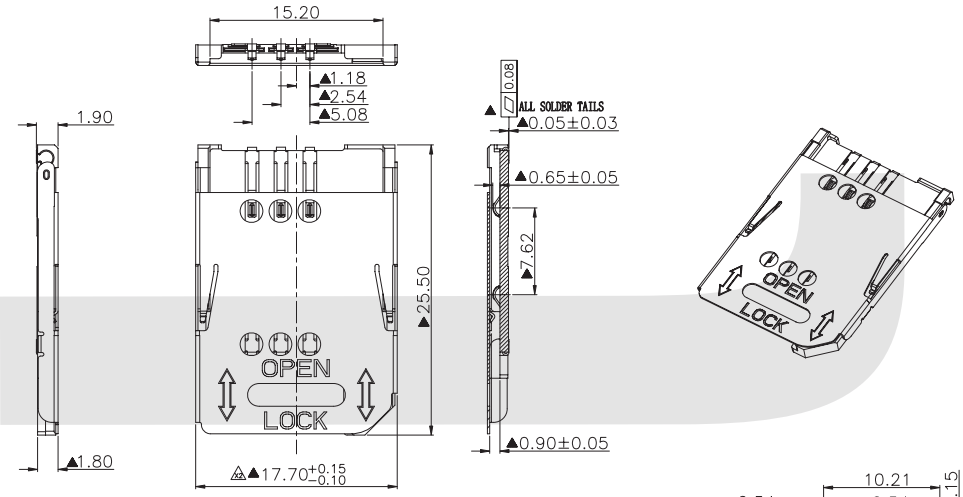

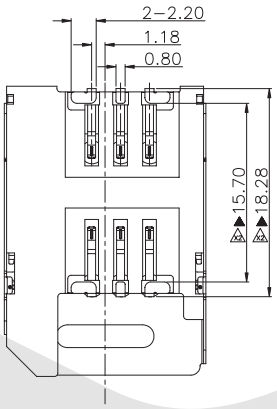

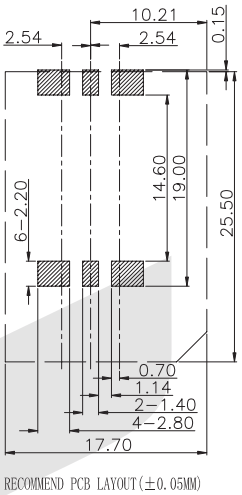

RECOMMEND PCB LAYOUT(±0.05MM)

ORDER INFORMATION

Product NO.: KLS1-SIM-019-6P

Pos. NO.
SIM Card Connector Type
Pin Number: 6P

SIM card Connector Series

KLS1-SIM-020-6P SIM Card Connector Series

Material

Housing: LCP UL94V-0
Card button: LCP UL94V-0
Reed tab: Tin-bronze QSn6.5-0.1 GB2066-89
PACKAGE: Tape and Reel Package



Specification

Pitch: 2.54mm
Environmental temperature: -45°C~+85°C
Voltage rating: 100V AC
Current rating: 0.5A Max
Withstand voltage: 200V AC/1Minute
Insulation resistance: ⩾1000MΩ
Contact resistance: ⩽30mΩ
Life: ＞5000 Cycles

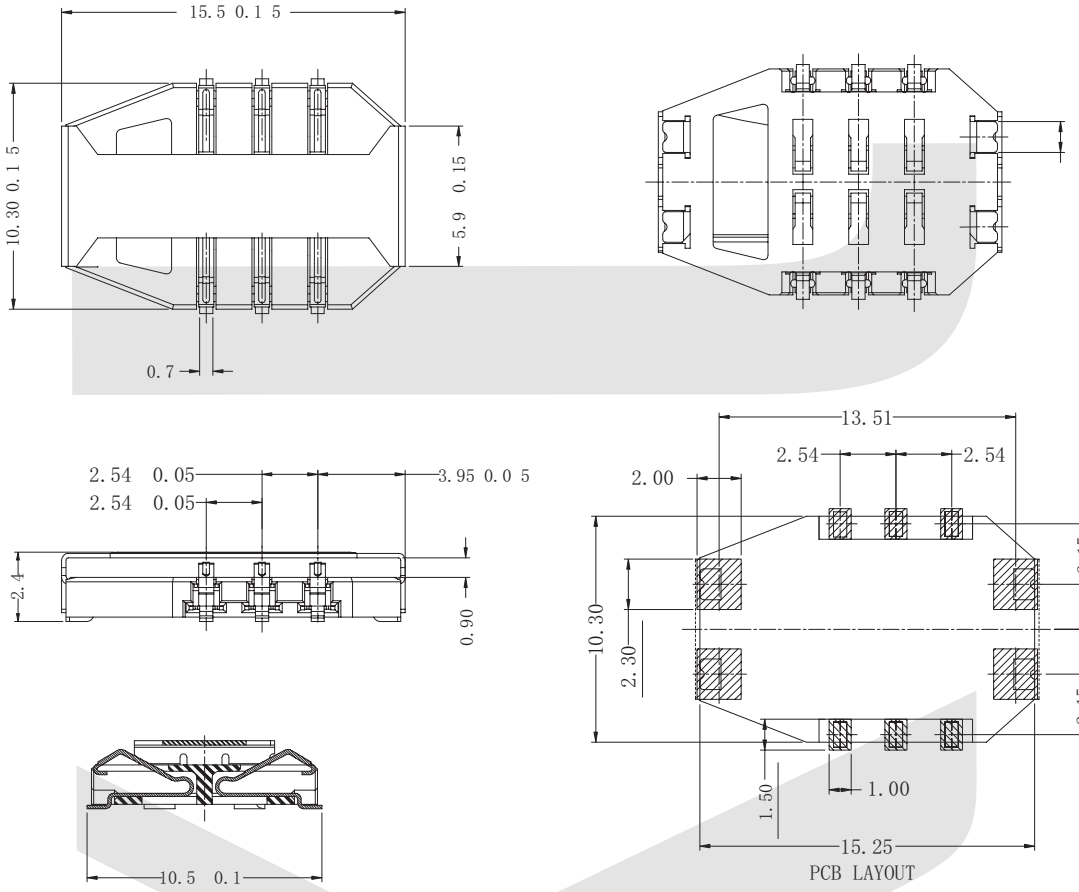

ORDER INFORMATION

Product NO.: KLS1-SIM-020 - 6P

Pos. NO.
T-FLASH Mirco SD Connector Type
Pin Number: 6P

SIM card Connector Series

KLS1-SIM-021-6P SIM Card Connector Series

Material

Housing: LCP UL94V-0
Card button: LCP UL94V-0
Reed tab: Tin-bronze QSn6.5-0.1 GB2066-89
PACKAGE: Tape and Reel Package



Specification

Pitch: 2.54mm
Environmental temperature: -45°C~+85°C
Voltage rating: 100V AC
Current rating: 0.5A Max
Withstand voltage: 200V AC/1Minute
Insulation resistance: ⩾1000MΩ
Contact resistance: ⩽30mΩ
Life: ＞5000 Cycles

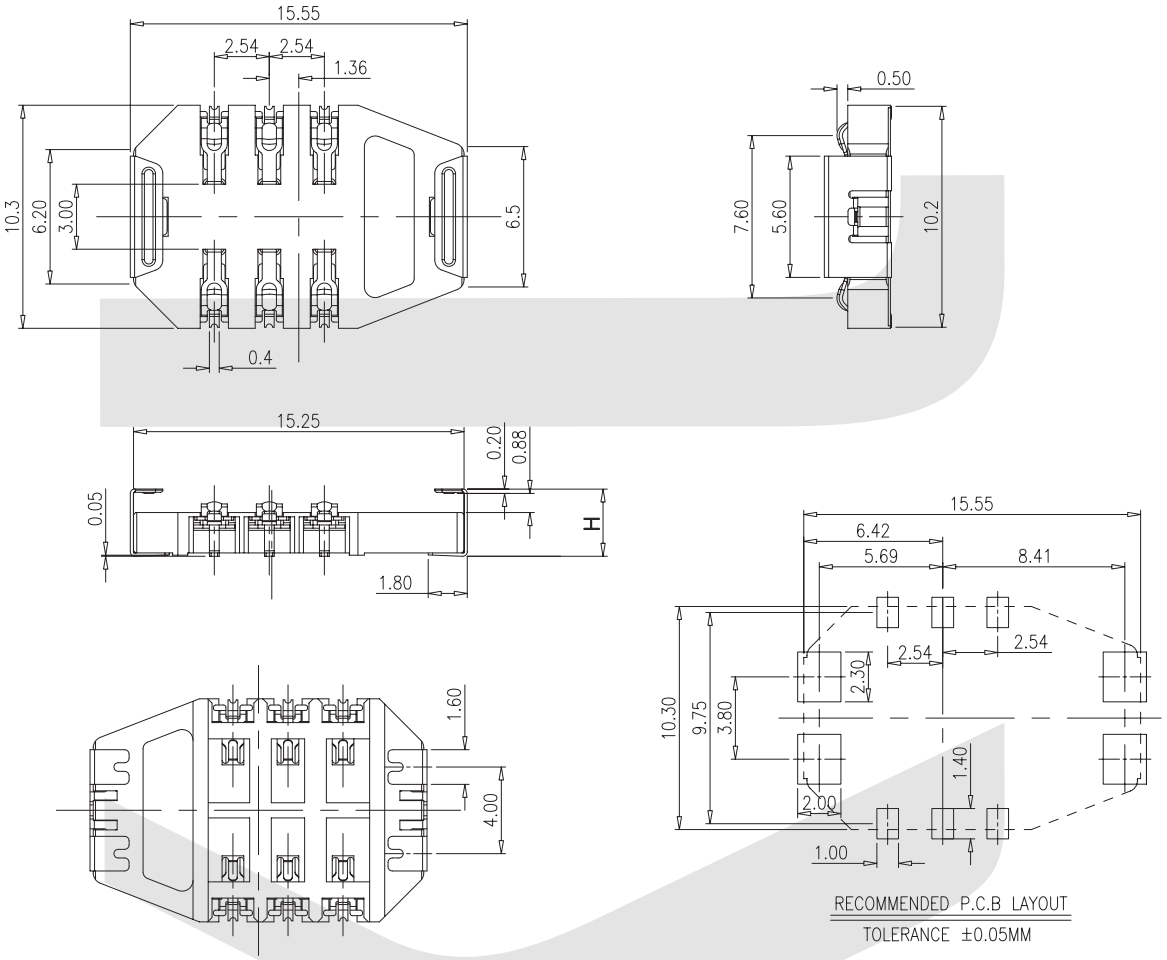

ORDER INFORMATION

Product NO.: KLS1-SIM-021-6P-H1

Pos. NO.
SIM Card Connector Type
Height: H1=2.1 H2=2.3 H3=2.5 H4=2.7 H5=2.9 H6=3.1
Pin Number: 6P

SIM Card and Memory Card Connector

KLS1-SIM-023-6P

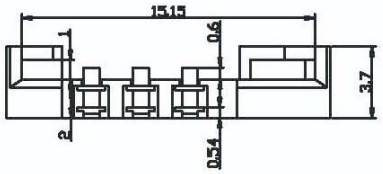



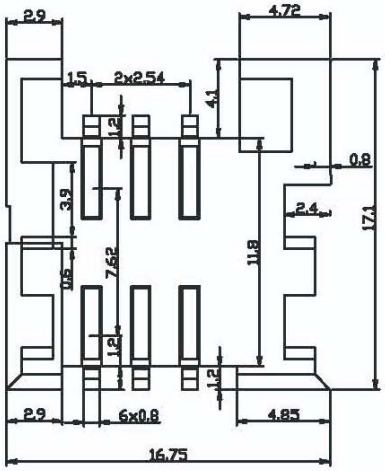

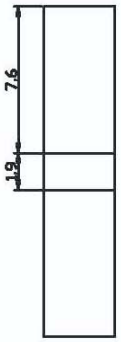

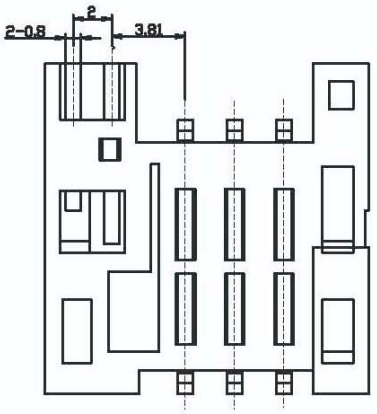

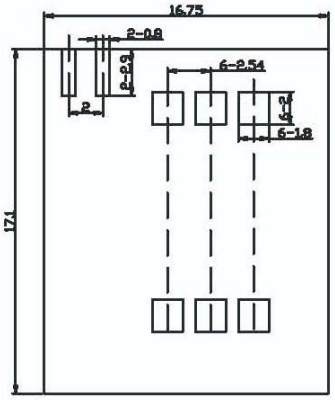

SPECIFICATIONS:	
Pitch:	2.54mm
Environmental temperature:	-45℃--+85℃
Voltage rating:	100V AC
Current rating:	0.5A Max
Withstand voltage:	200V AC/1Minute
Insulation resistance:	≥1000MΩ
Contact resistance:	≤30mΩ
Life:	＞5000 Cycles
MATERIAL:	
Housing:	LCP UL94V-0
Card button:	LCP UL94V-0
Reed tab:	Tin-bronze QSn6.5-0.1 GB2066-89
PACKAGE:	Tape and Reel Package

ORDER INFORMATION

Product NO. : KLS1-SIM-023-6P

Pos. NO. ——┐

SIM card Connector Series

KLS1-SIM-024 SIM+T-FLASH Connector Series

I

Material

Housing: LCP UL94V-0
Card button: LCP UL94V-0
Reed tab: Tin-bronze QSn6.5-0.1 GB2066-89
PACKAGE: Tape and Reel Package



Specification

Pitch: 2.54mm
Environmental temperature: -45°C~+85°C
Voltage rating: 100V AC
Current rating: 0.5A Max
Withstand voltage: 200V AC/1Minute
Insulation resistance: ⩾1000MΩ
Contact resistance: ⩽30mΩ
Life: ＞5000 Cycles

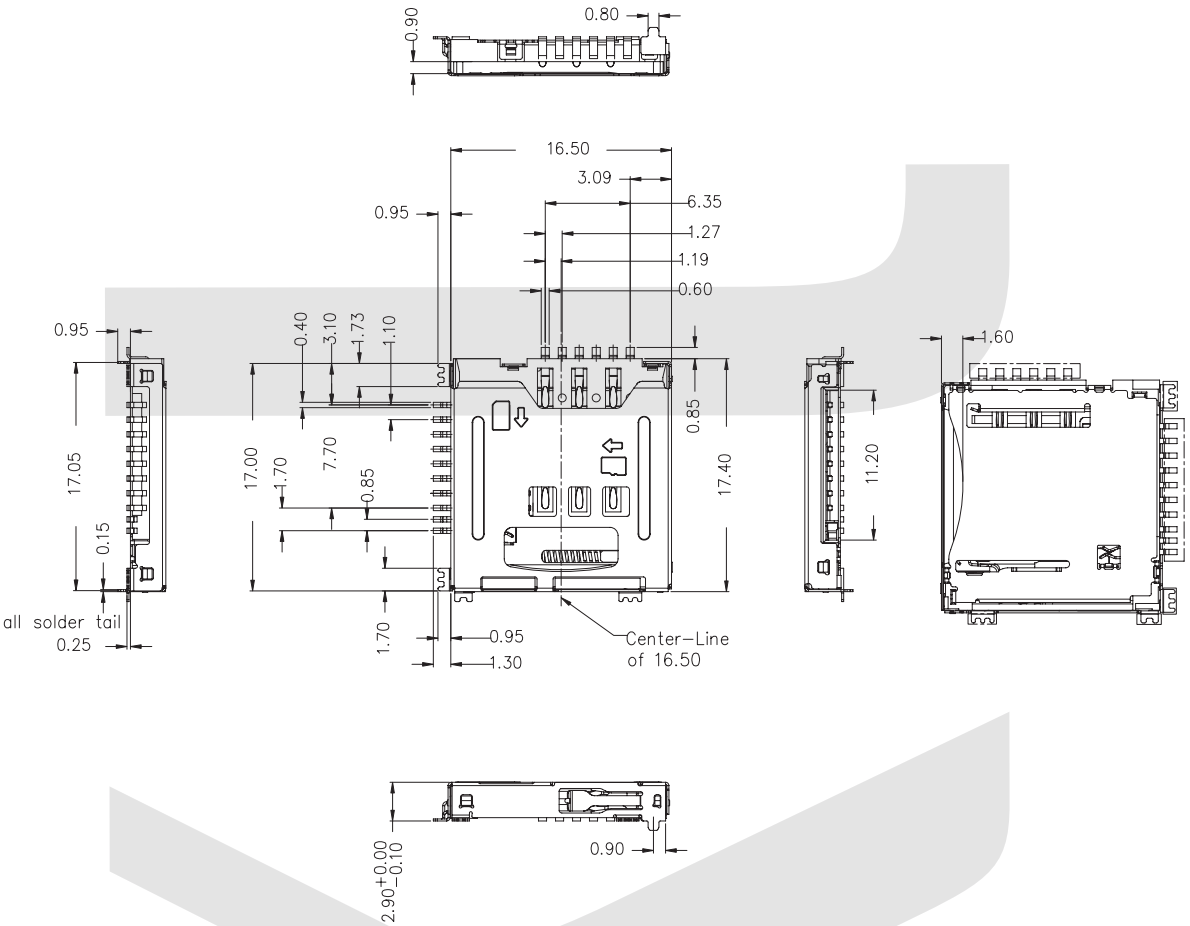

ORDER INFORMATION

Product NO.: KLS1-SIM- 024

Pos. NO.

SIM+T-FLASH Connector Type

SIM card Connector Series

KLS1-SIM-024 SIM+T-FLASH Connector Series

I

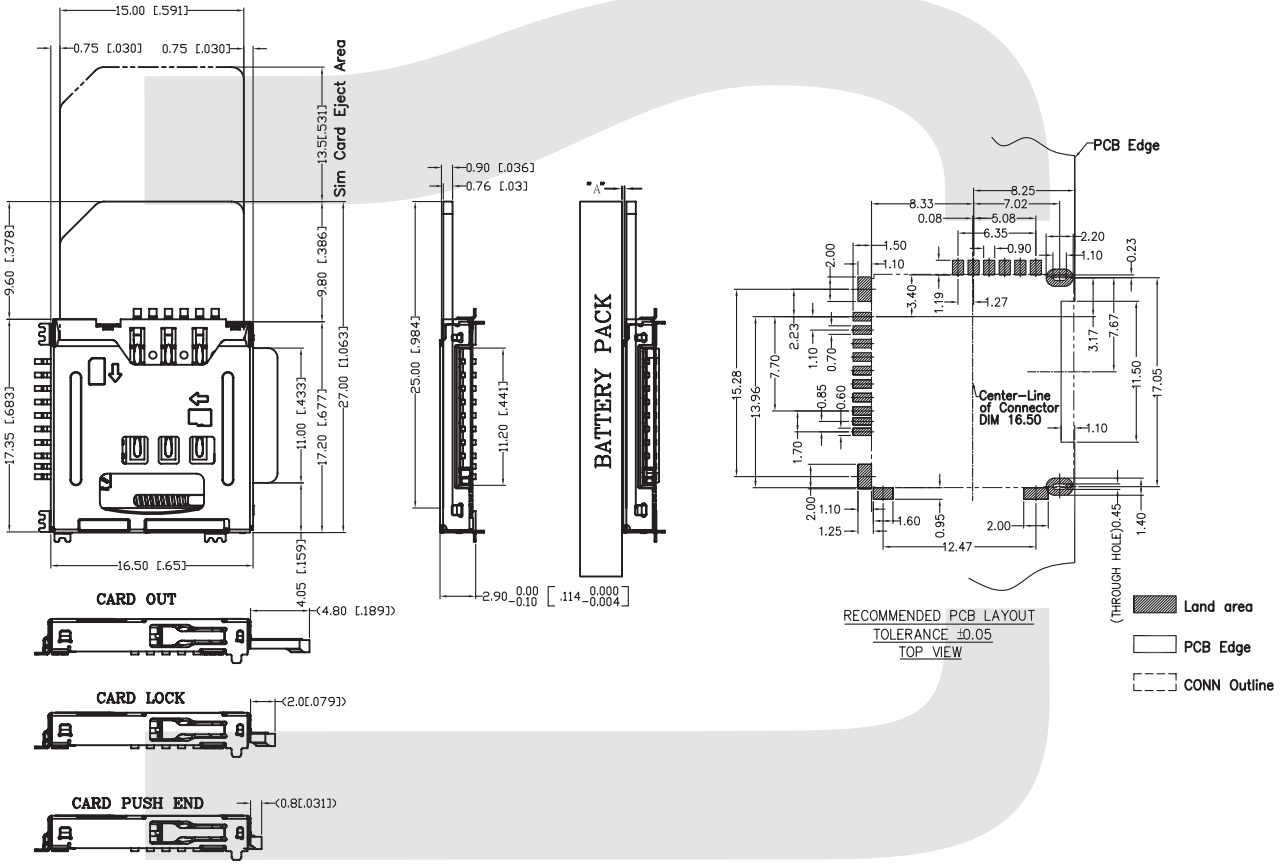

SIM CARD

Pin No	NAME
C1	VCC
C2	RST
C3	CLK
C4	Reserved
C5	GND
C6	VPP
C7	I/O
C8	Reserved

MICRO SD CARD

Pin No.	NAME	TYPE	DESCRIPTION
1	DAT2	I/O/PP	Date Line[bit2]
2	CD/DAT3	I/O/PP	Card Detect Date Line[bit3]
3	CMD	PP	Command Response
4	VDD	S	Supply Voltage
5	CLK	I	Clock
6	VSS	S	Supply Voltage Ground
7	DAT0	I/O/PP	Date Line[bit0]
8	DAT1	I/O/PP	Date Line[bit1]

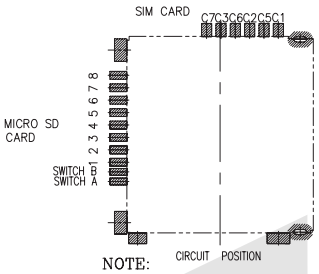

NOTE:
1.SWITCH TYPE:CARD OUT- SWITCH OPEN
CARD IN-SWITCH CONTACT
2.SET DISTANCE "A" Min 0.20mm PACK GAP CONN

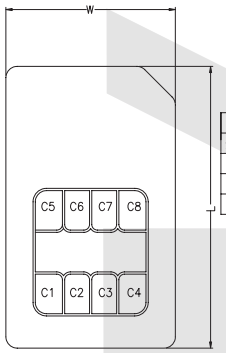

	SIM COMMON DIMENSIONS		
SYMBOL	MIN	NOM	MAX
L	24.90	25.00	25.10
W	14.90	15.00	15.10
T	0.68	0.76	0.84

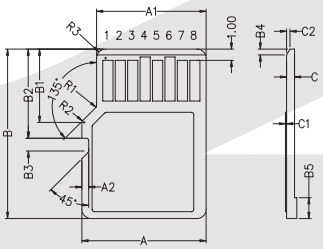

MICRO SD ASSOCIATION DIMENSION			
SYMBOL	MIN	NOM	MAX
A	10.90	11.00	11.10
A1	9.60	9.70	9.80
A2	0.50	0.60	0.70
B	14.90	15.00	15.10
B1	6.30	6.40	6.50
B2	7.80	7.90	8.00
B3	1.10	1.20	1.30
B4	0.42	0.52	0.62
B5	1.74	1.84	1.94
C	0.60	0.70	0.80
C1	0.00	–	0.15
C2	0.20	0.30	0.40
R1	0.20	0.40	0.60
R2	0.20	0.40	0.60
R3	0.70	0.80	0.90

I

SIM Card and Memory Card Connector

KLS1-SIM-024 (SIM+T-FLASH)

SPECIFICATIONS:	
Pitch:	1.27mm
Environmental temperature:	-30℃~+80℃
Voltage rating:	250V DC
Current rating:	0.5A Max
Withstand voltage:	500V AC/1Minute
Insulation resistance:	≥1000MΩ
Contact resistance:	≤30mΩ
Life:	>5000 Cycles
MATERIAL:	
Housing:	LCP UL94V-0
Reed tab:	Tin-bronze C5191
PACKAGE:	Tape and Reel Package



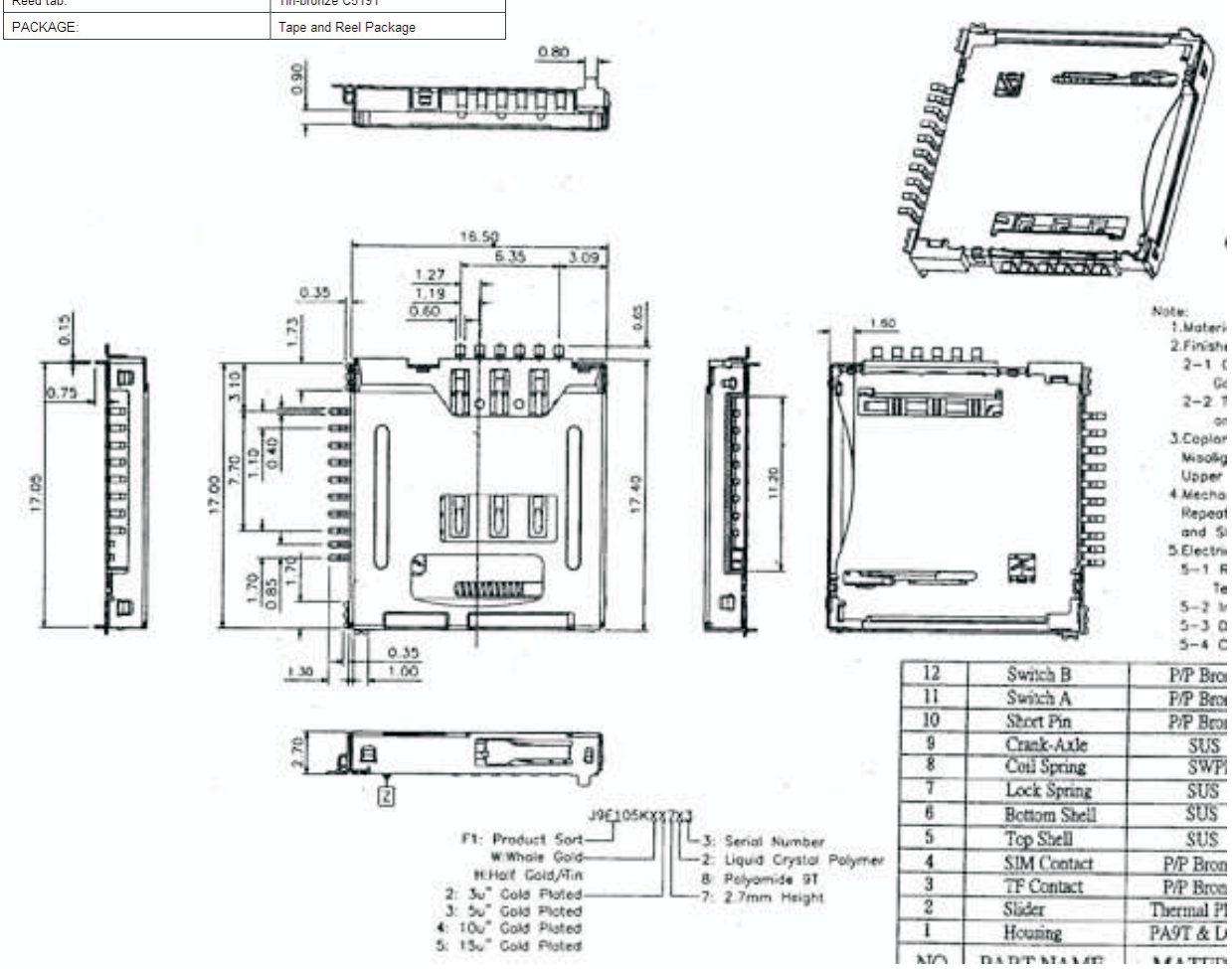

NO.	PART NAME	MATERIAL
12	Switch B	P/P Bro
11	Switch A	P/P Bro
10	Short Pin	P/P Bro
9	Crank-Axle	SUS
8	Coil Spring	SWP
7	Lock Spring	SUS
6	Bottom Shell	SUS
5	Top Shell	SUS
4	SIM Contact	P/P Bron
3	TF Contact	P/P Bron
2	Slider	Thermal Pl
1	Housing	PA9T & L

ORDER INFORMATION

Product NO. : KLS1-SIM-024

Pos. NO.

SIM+T-FLASH

SIM Card and Memory Card Connector

KLS1-SIM-029 (PUSH-PUSH Type)



Mechanical Characteristics
Insulation material:Thermoplastic, UL 94V-0
Contact Material: Copper alloy

Electrical Characteristics
Insulator Resistance: 1000MΩ Min,at DC 500V
Contact Resistance: 50mΩ typical,100mΩ Max.
Durability:5000 cycles Min.
Operating Temperature: -40°C+85°C

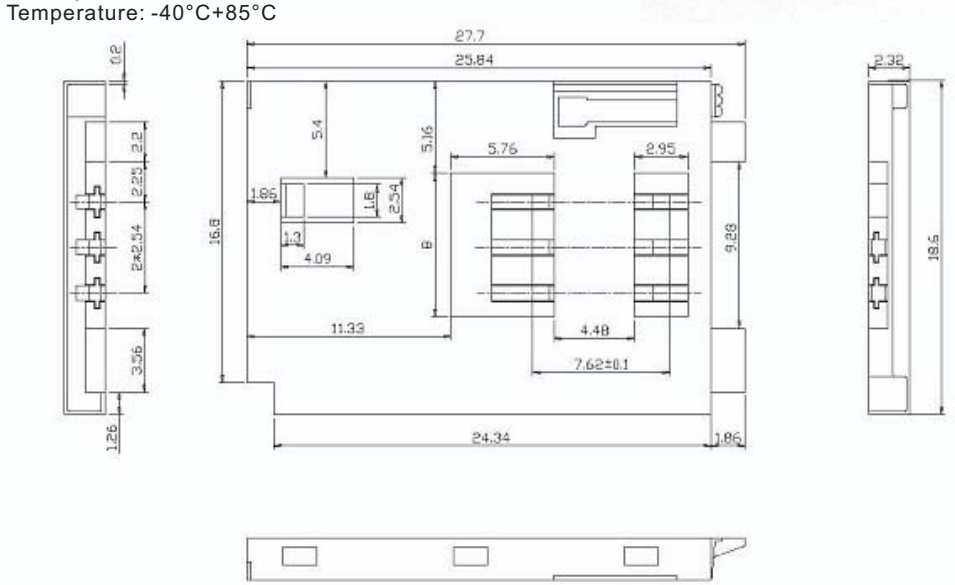

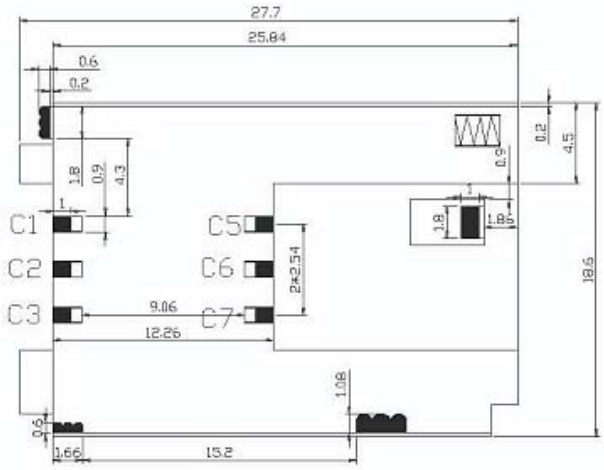

Installation dimensions (negative)
Fill the position for the welding point

ORDER INFORMATION

Product NO. : KLS1-SIM-029

Pos. NO.
PUSH-PUSH Type

SIM card Connector Series

KLS1-SIM-030 Push-Push SIM Card Connector Series

TECHNICAL CHARACTERISTICS

1.General Characteristics
Dimensions: 26.50Lx19.35Wx1.80H mm
Weight: Approx 1.50g
Contact principle: friction technology
Operating position: shaft up/down/horizontal
Mounting System: SMT(Post optional)
Durability: 5000 cycles min.

2.Mechanical characteristics:
Insulation material: Thermoplastic,UL 94V-0

3.Electrical Characteristics
Number of contacts (Optional): 6pins
contact resistance: 50mΩtypical,100mΩmax
insulation resistance: >1000MΩ/500V DC
Switch type: Blade
Operation: Normally open

4.Environmental Characteristics
Operating temperature: -40℃~+85℃
Operating humidity : 10%~+95%RH
Storage temperature: -40℃~+85℃
Storage Humidity: 10%~95%RH
thermal shock: -40℃~+85℃,5cycles
Damp Heat: 40℃,90%RH,10days.
Salt-Mist: 35℃,5%NaCl,24HR

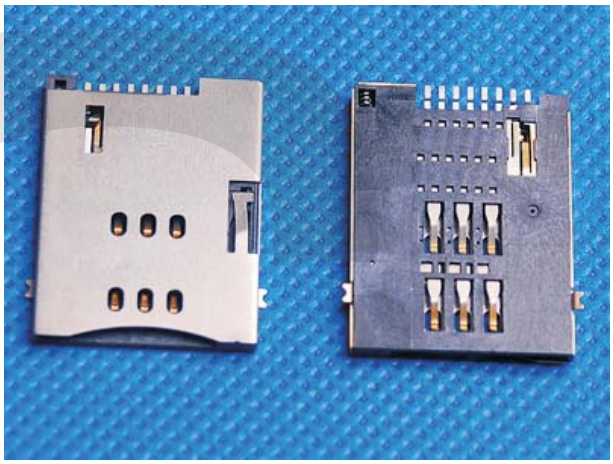

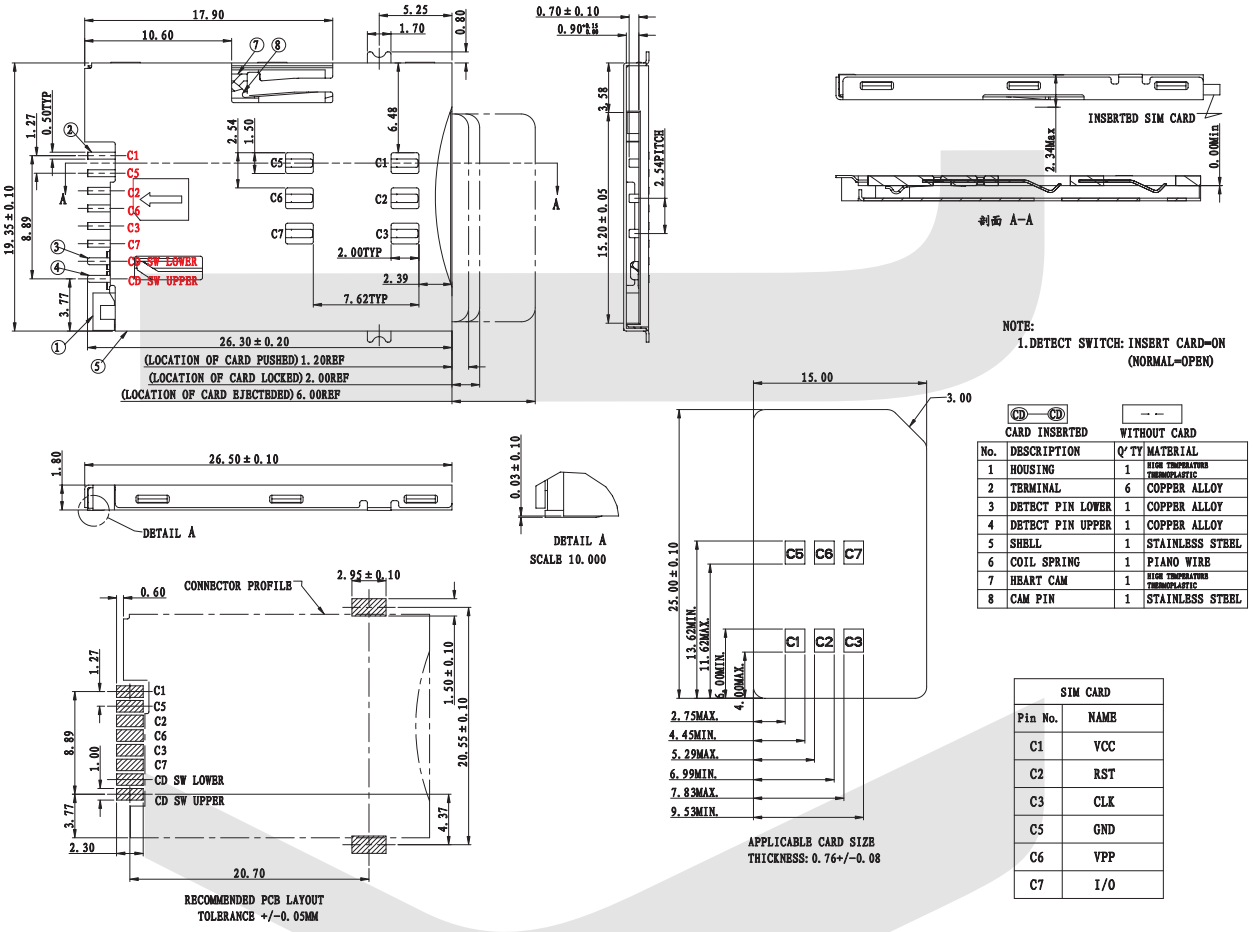

No.	DESCRIPTION	Q'TY	MATERIAL
1	HOUSING	1	HIGH TEMPERATURE THERMOPLASTIC
2	TERMINAL	6	COPPER ALLOY
3	DETECT PIN LOWER	1	COPPER ALLOY
4	DETECT PIN UPPER	1	COPPER ALLOY
5	SHELL	1	STAINLESS STEEL
6	COIL SPRING	1	PIANO WIRE
7	HEART CAM	1	HIGH TEMPERATURE THERMOPLASTIC
8	CAM PIN	1	STAINLESS STEEL

SIM CARD	
Pin No.	NAME
C1	VCC
C2	RST
C3	CLK
C5	GND
C6	VPP
C7	I/O

ORDER INFORMATION

Product NO.: KLS1-SIM-030-6P

Pos. NO.

Push-Push SIM Card Connector Type

SIM Card and Memory Card Connector

KLS1-SIM-032

Mechanical Characteristics
Insulation material:Thermoplastic,UL 94V-0
Contact Material: Copper alloy

Electrical Characteristics
Voltage Rating: 100 V AC/DC
Current Rating: 0.5A MAX
Operating Temperature: -25°C ~+70°C
Contact Resistance: 30 mΩ MAX.
Insulation Resistance : 1000MΩ MIN.
Dielectric Withstanding Voltage : Withstand 200 VAC For 1 MINUTE 200 VAC
Durability : 5000 CYCLES



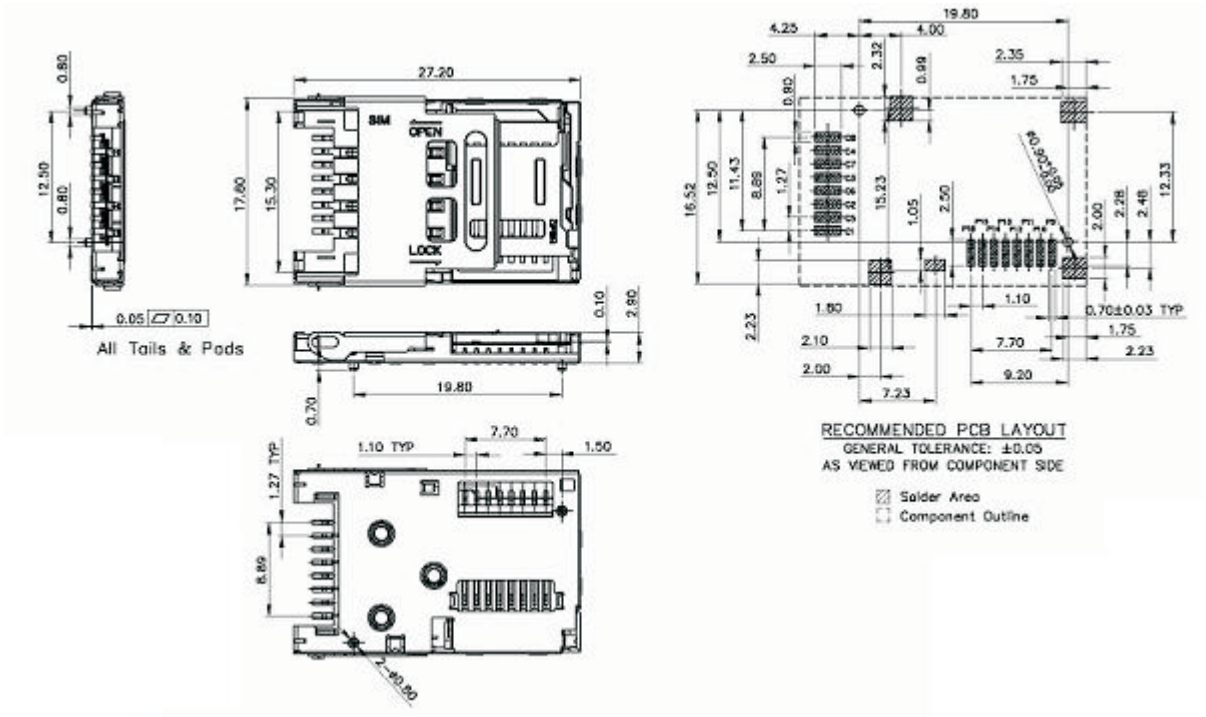

SIM Card and Memory Card Connector

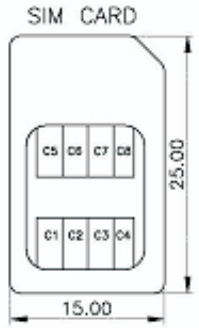

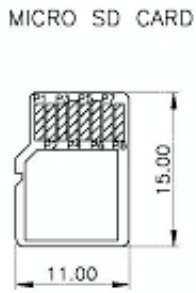

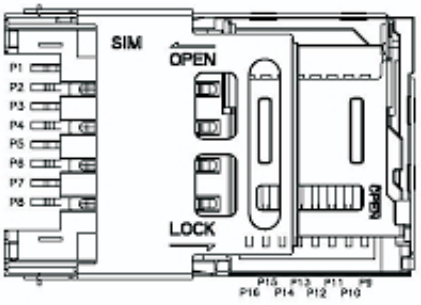

SIM CARD PIN OUT		
Pin#	Name	Description
C1	VDC	+5v or 3.3v DC
C2	RST	Card Reset (Optional)
C3	CLK	Card Clock
C4	RFU	Reserved for Future Use
C5	GND	Ground
C6	VPP	+21v DC (Programming)
C7	I/O	In/Out (Data)
C8	RFU	Reserved for Future Use

Micro SD CARD PIN OUT		
Pin#	Name	Description
P1	DAT2	Data Bit 2
P2	CD/DAT3	Card Detect/Data Bit 3
P3	CMD	Command Line
P4	Vdd	Supply Voltage 2.7v/3.6v
P5	CLK	Clock
P6	Vss	Ground
P7	DAT0	Data Bit 0
P8	DAT2	Data Bit 1

Combo Connector Pin Assignment:

PIN NO.	NAME	DESCRIPTION
P1	Sim Card C8 (AS)	Application Specific
P2	Sim Card C4 (AS)	Application Specific
P3	Sim Card C7 (I/O)	In/Out (Data)
P4	Sim Card C3 (CLK)	Card Clock
P5	Sim Card C6 (VPP)	+21v DC
P6	Sim Card C2 (RST)	Card Reset
P7	Sim Card C5 (GND)	Ground
P8	Sim Card C1 (VCC)	+5v or 3.3v DC
P9	Micro SD P1 (DAT2)	Data Bit 2
P10	Micro SD P2 (CD/DAT3)	Card Detect/Data Bit 3
P11	Micro SD P3 (CMD)	Command Line
P12	Micro SD P4 (VDD)	Supply Voltage 2.7v/3.6v
P13	Micro SD P5 (CLK)	Clock
P14	Micro SD P6 (VSS)	Ground
P15	Micro SD P7 (DAT0)	Data Bit 0
P16	Micro SD P8 (DAT2)	Data Bit 1

ORDER INFORMATION

Product NO. : KLS1-SIM-032

Pos. NO. ——┐

SLOT/ EDGE CARD Series

KLS1-603C EDGE CARD SLOT 2.54mm Connector Straight Pin Type

Electrical Characteristics:

Current Rating: 2 AMP
Insulator Resistance: 1000M Ohm min. At DC 500V DC
Contact Resistance: 30m Ohm max. At DC 100mA
Withstanding Voltage: 1000V AC / rms 50Hz for 1 minute
Operating Temperature: -45°C~+105°C

Material:

Housing: Glass filled PBT UL94V-0
Contacts: Brass or Phosphor Bronze
Plating: Contact Gold and Dip Tin over Nickel

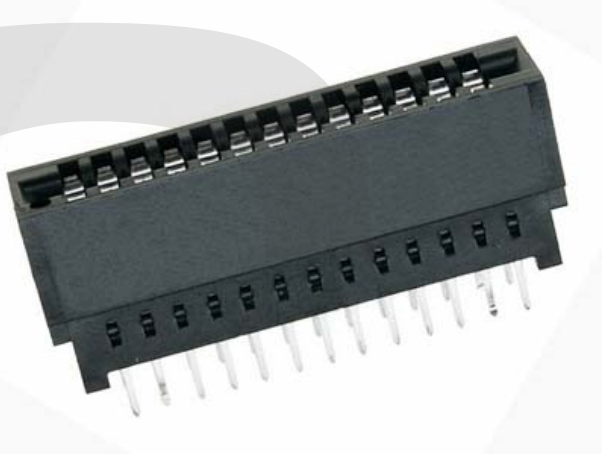

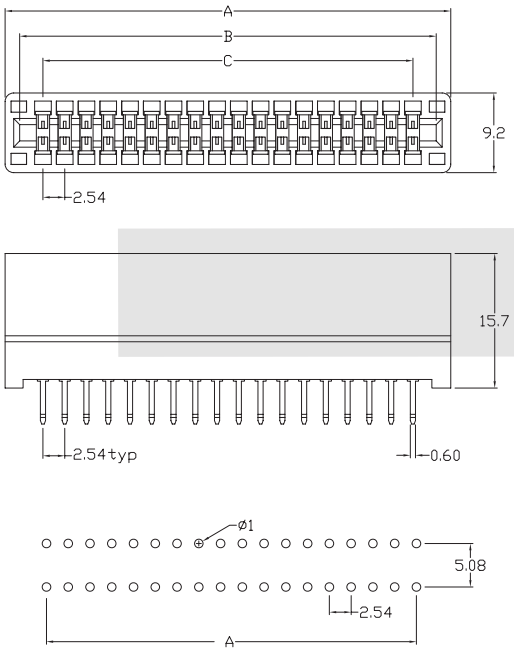

P.C.B Layout

Dimension

Position	A	B	C
06	13.92	10.52	5.08
08	16.46	13.06	7.62
10	19.00	15.60	10.16
12	21.54	18.14	12.70
14	24.08	20.68	15.24
20	31.70	28.30	22.86
22	34.24	30.84	25.40
24	36.78	33.38	27.94
26	39.32	35.92	30.48
30	44.40	41.00	35.56
36	52.02	48.62	43.18
40	57.10	53.70	48.26
44	62.18	58.78	53.34
50	69.80	66.40	60.96
60	82.50	79.10	73.66
62	85.04	81.64	76.20
72	97.74	94.34	88.90
86	115.52	112.12	106.68
100	133.30	129.90	124.46

ORDER INFORMATION

Product No.: KLS1-603 C-XX-S

Pos. No.
EDGE CARD Slot 2.54mm Connector
C-Without Ear
Number of Contacts: XX=06-100Pin
Mounting Style: S=Straight pin R=Right Pin

SLOT/ EDGE CARD Series

KLS1-603C EDGE CARD SLOT 2.54mm Connector Right Pin Type

Electrical Characteristics:

Current Rating: 2 AMP
Insulator Resistance: 1000M Ohm min. At DC 500V DC
Contact Resistance: 30m Ohm max. At DC 100mA
Withstanding Voltage: 1000V AC / rms 50Hz for 1 minute
Operating Temperature: -45°C~+105°C

Material:

Housing: Glass filled PBT UL94V-0
Contacts: Brass or Phosphor Bronze
Plating: Contact Gold and Dip Tin over Nickel

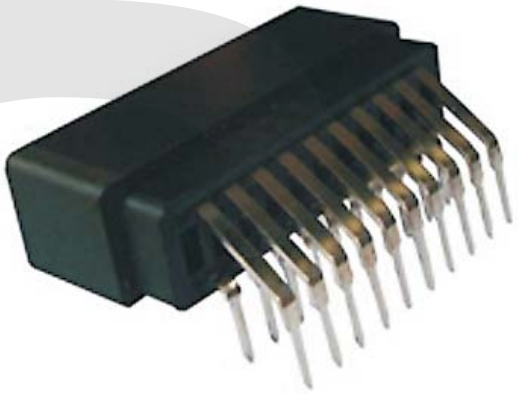

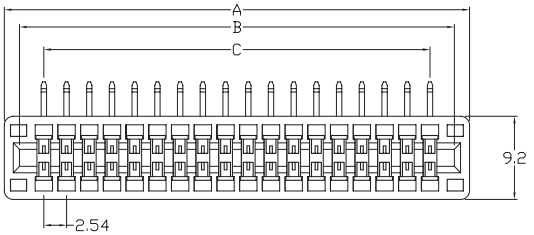

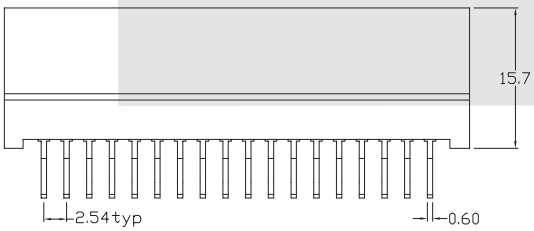

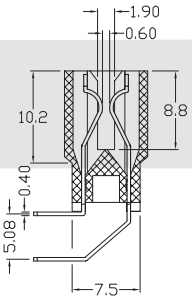

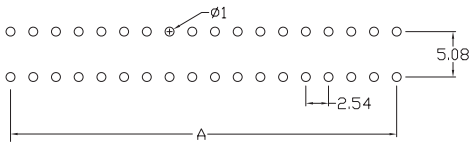

P.C.B Layout

Dimension

Position	A	B	C
06	13.92	10.52	5.08
08	16.46	13.06	7.62
10	19.00	15.60	10.16
12	21.54	18.14	12.70
14	24.08	20.68	15.24
20	31.70	28.30	22.86
22	34.24	30.84	25.40
24	36.78	33.38	27.94
26	39.32	35.92	30.48
30	44.40	41.00	35.56
36	52.02	48.62	43.18
40	57.10	53.70	48.26
44	62.18	58.78	53.34
50	69.80	66.40	60.96
60	82.50	79.10	73.66
62	85.04	81.64	76.20
72	97.74	94.34	88.90
86	115.52	112.12	106.68
100	133.30	129.90	124.46

ORDER INFORMATION

Product No.: KLS1-603 C-XX-R

Pos. No.
EDGE CARD Slot 2.54mm Connector
C-Without Ear
Number of Contacts: XX=06-100Pin
Mounting Style: S=Straight pin R=Right Pin

SLOT/ EDGE CARD Series

KLS1-603D EDGE CARD With Ears 2.54mm Connector Straight Pin Type

Electrical Characteristics:

Current Rating: 2 AMP
Insulator Resistance: 1000M Ohm min. At DC 500V DC
Contact Resistance: 30m Ohm max. At DC 100mA
Withstanding Voltage: 1000V AC / rms 50Hz for 1 minute
Operating Temperature: -45°C~+105°C

Material:

Housing: Glass filled PBT UL94V-0
Contacts: Brass or Phosphor Bronze
Plating: Contact Gold and Dip Tin over Nickel

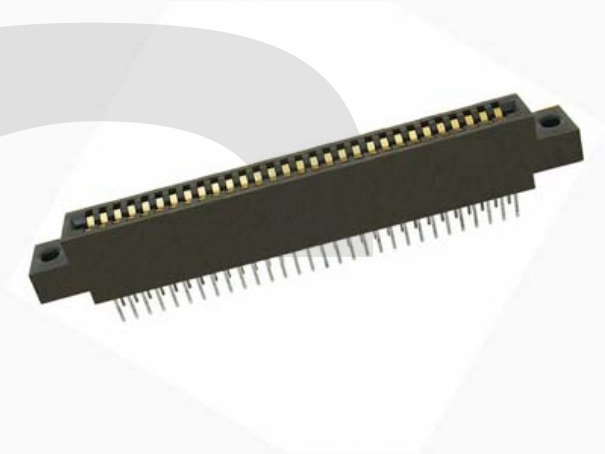

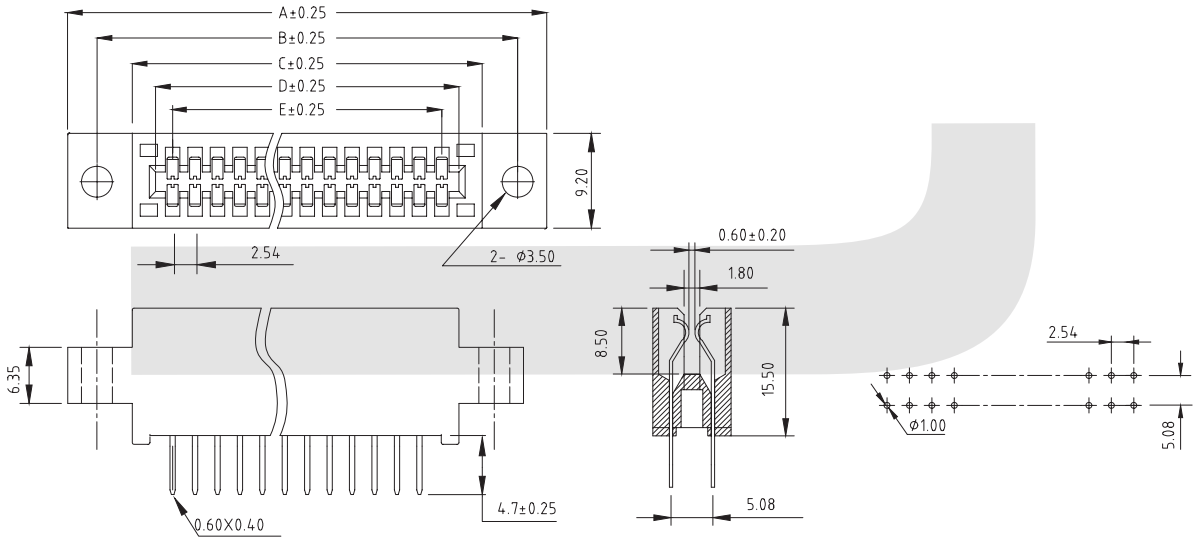

CONTACTS	DIM A	DIM B	DIM C	DIM D	DIM E
24	51.69	45.09	37.38	33.22	27.94
44	77.09	70.49	62.78	58.62	53.34
48	82.17	75.57	67.86	63.70	58.42
50	84.71	78.11	70.40	66.24	60.96
56	92.33	85.73	78.02	73.86	68.58
60	97.41	90.81	83.10	78.94	73.66
70	110.11	103.51	95.80	91.64	86.36
72	112.65	106.05	98.34	94.18	88.90
86	130.43	123.83	116.12	111.96	106.68
88	133.17	126.57	118.66	114.50	109.22
100	148.21	141.61	133.90	129.74	124.46

ORDER INFORMATION

Product No.: KLS1-603 D-XX-S

Pos. No.
EDGE CARD With ears 2.54mm Connector
D-With Ear
Number of Contacts: XX=06-100Pin
Mounting Style: S=Straight pin R=Right Pin

SLOT/ EDGE CARD Series

KLS1-603D EDGE CARD With Ears 2.54mm Connector Right Pin Type

Electrical Characteristics:

Current Rating: 2 AMP
Insulator Resistance: 1000M Ohm min. At DC 500V DC
Contact Resistance: 30m Ohm max. At DC 100mA
Withstanding Voltage: 1000V AC / rms 50Hz for 1 minute
Operating Temperature: -45°C~+105°C

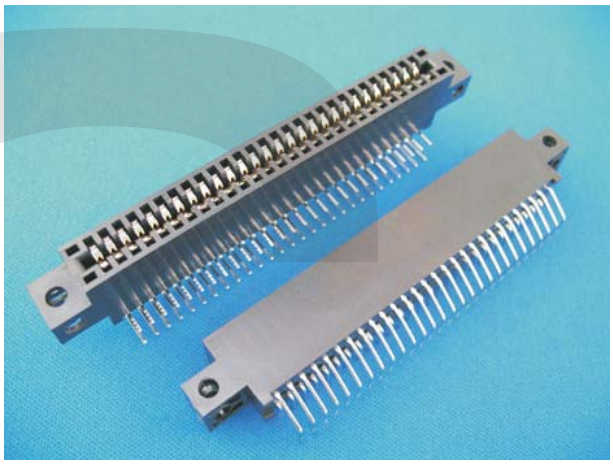

Material:

Housing: Glass filled PBT UL94V-0
Contacts: Brass or Phosphor Bronze
Plating: Contact Gold and Dip Tin over Nickel

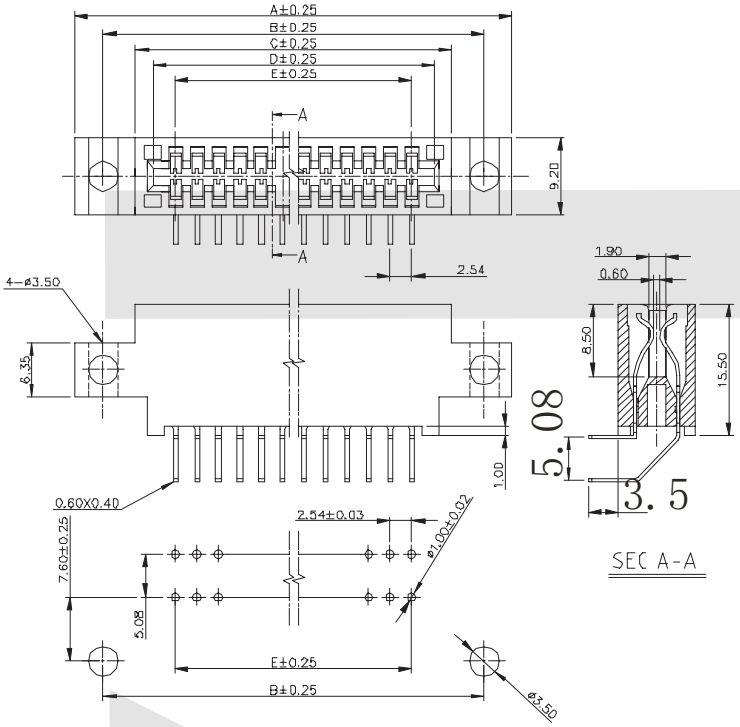

CONTACTS	DIM A	DIM B	DIM C	DIM D	DIM E
24	51.69	45.09	37.38	33.22	27.94
44	77.09	70.49	62.78	58.62	53.34
48	82.17	75.57	67.86	63.70	58.42
50	84.71	78.11	70.40	66.24	60.96
56	92.33	85.73	78.02	73.86	68.58
60	97.41	90.81	83.10	78.94	73.66
70	110.11	103.51	95.80	91.64	86.36
72	112.65	106.05	98.34	94.18	88.90
86	130.43	123.83	116.12	111.96	106.68
88	133.17	126.57	118.66	114.50	109.22
100	148.21	141.61	133.90	129.74	124.46

ORDER INFORMATION

Product No.: KLS1-603 D-XX-R

- Pos. No. — EDGE CARD With ears 2.54mm Connector
- D-With Ear
- Number of Contacts: XX=06-100Pin
- Mounting Style: S=Straight pin R=Right Pin

SLOT/EDGE CARD Series

KLS1-903B EDGE CARD SLOT 3.175mm Connector

Electrical Characteristics:

Current Rating: 1 AMP
Insulator Resistance: 5000M Ohm min. at DC 500V
Contact Resistance: 20m Ohm max. at DC 100mA
Operating Temperature: -45°C~+105°C

Material:

Housing: 30% Glass filled PBT UL94V-0
Contacts: Brass or Phosphor Bronze
Plating: full gold or selected gold in mating area.
100u" min. tin-lead on termination area.
with entire contact under-plated 50u"min.
Nickel

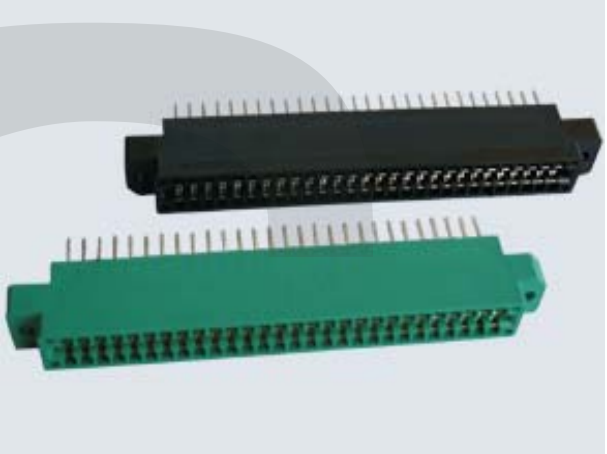

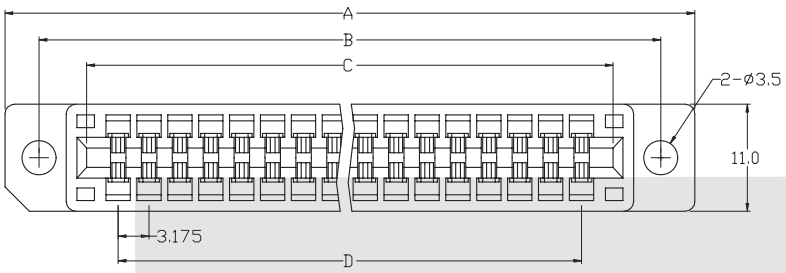

Dimension

Position	A	B	C	D	E
40	83.80	76.80	66.80	60.33	71.20
44	90.15	83.15	73.15	66.68	77.55
56	109.20	102.20	92.20	85.73	96.60
60	115.55	108.55	98.55	92.08	102.95
72	134.60	127.60	117.60	111.13	122.00
80	147.30	140.30	130.30	123.83	134.70
86	156.83	149.83	139.83	133.35	144.23
100	179.05	172.05	162.05	155.58	166.45

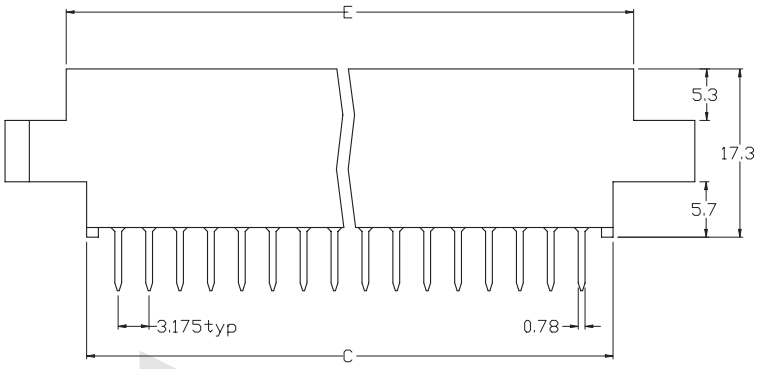

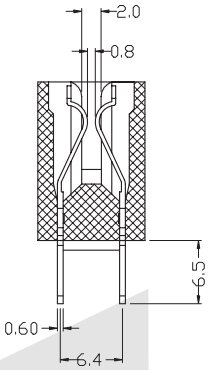

ORDER INFORMATION

Product No.: KLS1-903B-XX

Pos. No.
EDGE CARD SLOT 3.175mm Connector
Number of Contacts

SLOT/EDGE CARD Series

KLS1-903D EDGE CARD 3.96mm Connector

Electrical Characteristics:

Current Rating: 2 AMP
Insulator Resistance: 1000MΩmin. at DC 500V
Contact Resistance: 30mΩmax. at DC 100mA
Withstanding Voltage:1000V AC /rms 50Hz for 1 minute
Operating Temperature: -45ºC~+105ºC

Material:

Housing: Glass filled PBT UL94V-0
Contacts: Brass or Phosphor Bronze
Plating: Contact gold and Dip Tin over Nickel

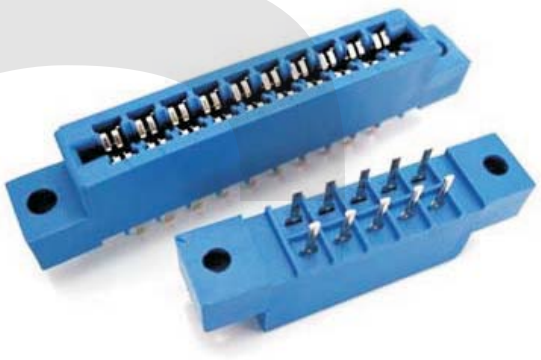

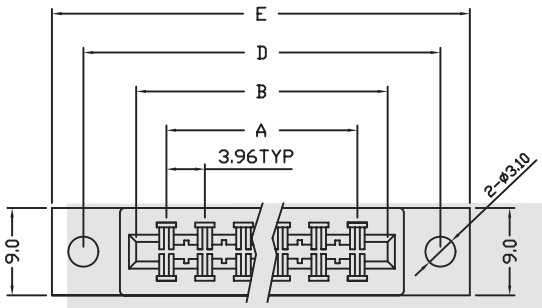

Circuit	Dimension				
	A	B	C	D	E
10	15.84	24.06	27.40	34.94	41.24
12	19.80	28.02	31.36	38.90	45.20
16	27.72	35.94	39.28	46.82	53.12
20	35.64	43.86	47.20	54.74	61.04
24	43.56	51.78	55.12	62.66	68.96
26	47.52	55.74	59.08	66.62	72.92
28	51.48	59.70	63.04	70.58	76.88
30	55.44	63.66	67.00	74.54	80.84
32	59.40	67.62	70.96	78.50	84.80
36	67.32	75.54	78.88	86.42	92.72
40	75.24	83.46	86.80	94.34	100.64
44	83.16	91.38	94.72	102.26	108.56
46	87.12	95.34	98.68	106.22	112.52
50	95.04	103.26	106.60	114.14	120.44
56	106.92	115.14	118.48	126.02	132.32
60	114.84	123.06	126.40	133.94	140.24
62	118.80	127.02	130.36	137.90	144.20
64	122.76	130.98	134.32	141.86	148.16
70	134.64	142.86	146.20	153.74	160.04
72	138.60	146.82	150.16	157.70	164.00
86	166.32	174.54	177.88	185.49	191.48

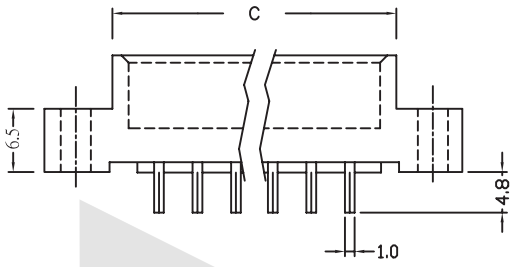

DIP TYPE

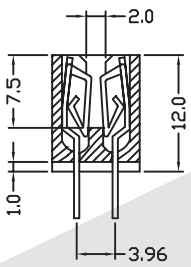

ORDER INFORMATION

Product No.: KLS1-903 D-XX-L

Pos. No.
EDGE CARD 3.96mm Connector Series
D-Dip type
Number of Contacts: XX=10~100Pin
Insulator Color: L=Blue B=Black

I

SLOT/EDGE CARD Series

KLS1-903S EDGE CARD 3.96mm Connector

Electrical Characteristics:

Current Rating: 2 AMP
Insulator Resistance: 1000MΩmin. at DC 500V
Contact Resistance: 30mΩmax. at DC 100mA
Withstanding Voltage:1000V AC /rms 50Hz for 1 minute
Operating Temperature: -45ºC~+105ºC

Material:

Housing: Glass filled PBT UL94V-0
Contacts: Brass or Phosphor Bronze
Plating: Contact gold and Dip Tin over Nickel

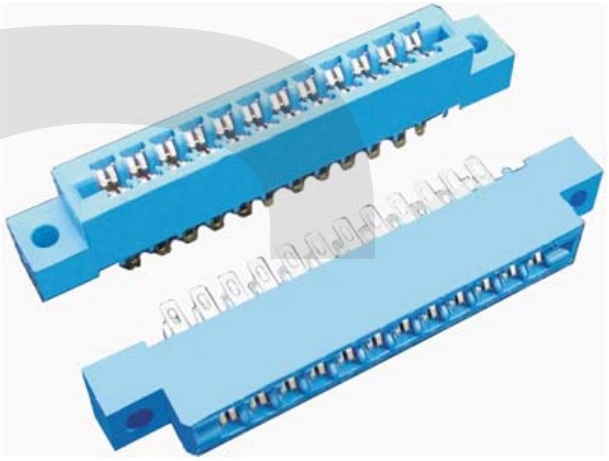

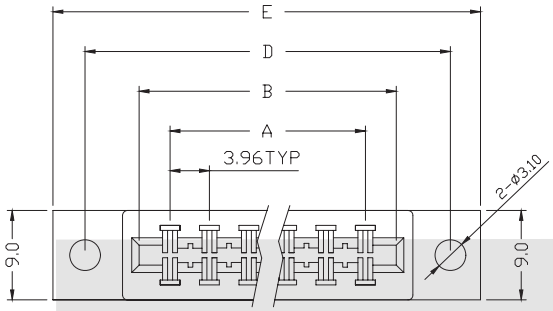

Circuit	Dimension				
	A	B	C	D	E
10	15.84	24.06	27.40	34.94	41.24
12	19.80	28.02	31.36	38.90	45.20
16	27.72	35.94	39.28	46.82	53.12
20	35.64	43.86	47.20	54.74	61.04
24	43.56	51.78	55.12	62.66	68.96
26	47.52	55.74	59.08	66.62	72.92
28	51.48	59.70	63.04	70.58	76.88
30	55.44	63.66	67.00	74.54	80.84
32	59.40	67.62	70.96	78.50	84.80
36	67.32	75.54	78.88	86.42	92.72
40	75.24	83.46	86.80	94.34	100.64
44	83.16	91.38	94.72	102.26	108.56
46	87.12	95.34	98.68	106.22	112.52
50	95.04	103.26	106.60	114.14	120.44
56	106.92	115.14	118.48	126.02	132.32
60	114.84	123.06	126.40	133.94	140.24
62	118.80	127.02	130.36	137.90	144.20
64	122.76	130.98	134.32	141.86	148.16
70	134.64	142.86	146.20	153.74	160.04
72	138.60	146.82	150.16	157.70	164.00
86	166.32	174.54	177.88	185.49	191.48

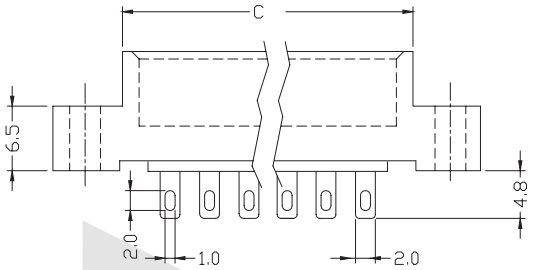

SOLDER TYPE

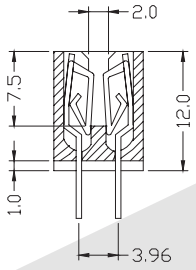

ORDER INFORMATION

Product No.: KLS1-903 S-XX-L

Pos. No.
EDGE CARD 3.96mm Connector Series
Insulator Color: L=Blue B=Black
Number of Contacts: XX=10~100Pin
S-Solder eyelet type

IC Socket Series

KLS1-216B IC Socket 1.778mm

Electrical Characteristics:

Current Rating:1 AMP
Insulator Resistance: 5000MΩmin. at DC 500V
Contact Resistance: 20mΩmax. at DC 100mA
Operating Temperature: -45 C~+105 C

Material:

Housing: 30% Glass filled PBT UL94V-0
Contacts: Phosphor Bronze
Plating: Tin plated: 100u" over 50u" nickel

Features:

*IC Socket Strips - with screw machind pins

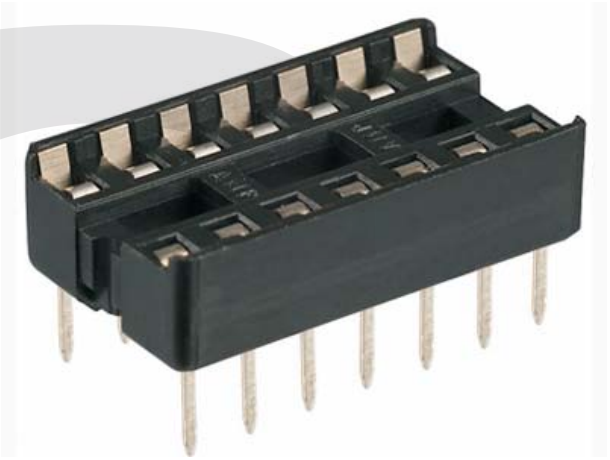

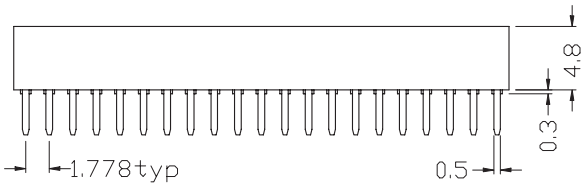

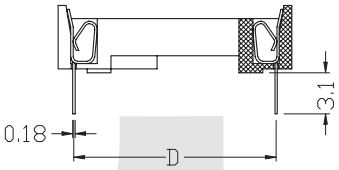

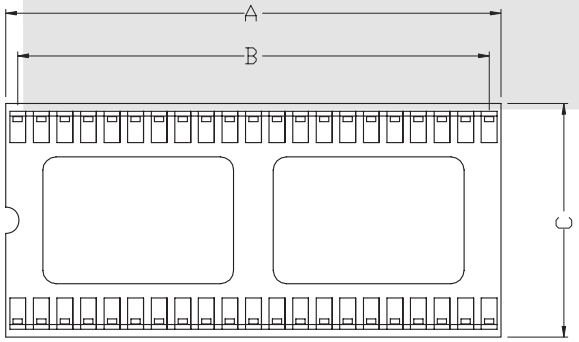

Dimension

position	A	B	C	D
24	21.30	19.56	12.65	10.16
28	25.17	23.11	12.65	10.16
30	26.60	24.89	12.65	10.16
40	35.84	33.78	17.73	15.24
42	37.46	35.56	17.73	15.24
48	42.79	40.89	17.73	15.24
52	46.35	44.45	17.73	15.24
56	49.91	48.01	17.73	15.24
64	57.04	55.12	21.54	19.05

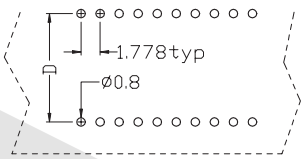

P.C.B Layout

ORDER INFORMATION

Product No.: KLS1-216B-XX-1

Pos. No.
IC Socket 1.778mm Series
Row spacing Code: 1: D=10.16mm 2: B = 15.24mm 3:B=19.05mm
Number of Contacts: XX=24-64Pin

IC Socket Series

KLS1-216 IC SOCKET 2.54mm(0.100")

Electrical Characteristics:

Current Rating:1 AMP
Insulator Resistance: 5000MΩmin. at DC 500V
Contact Resistance: 20mΩmax. at DC 100mA
Operating Temperature: -45°C~+105°C

Material:

Housing: 30% Glass filled PBT UL94V-0
Contacts: Phosphor Bronze
Plating: Tin plated: 100u" over 50u" nickel

Features:

*IC Socket Strips - with screw machind pins

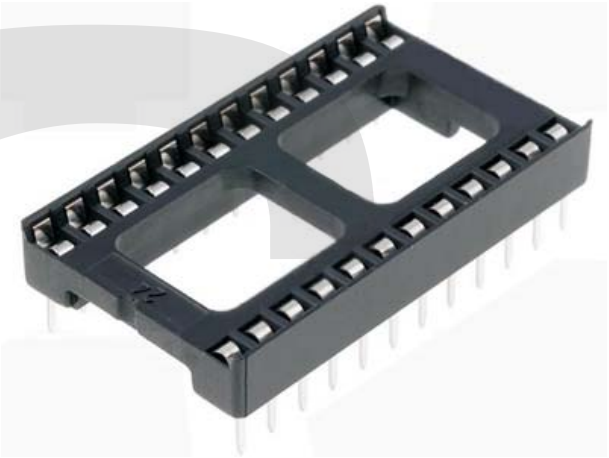

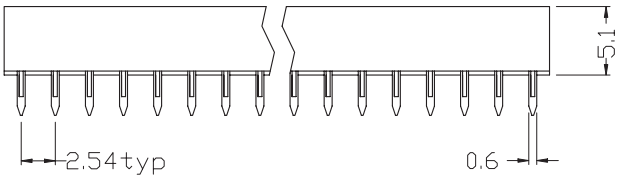

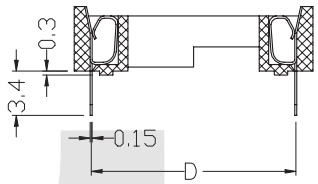

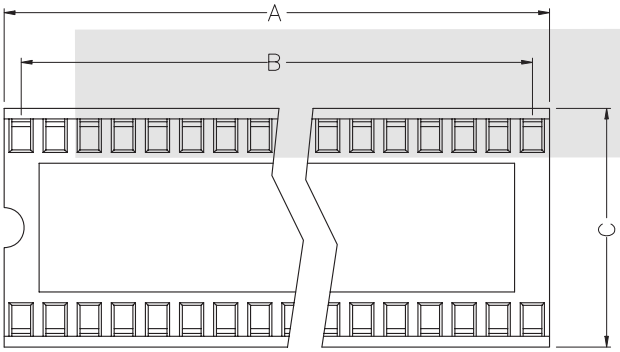

Dimension

position	A	B	C	D
08	10.16	7.62	10.16	7.62
14	17.78	15.24	10.16	7.62
16	20.32	17.78	10.16	7.62
18	22.86	20.32	10.16	7.62
20	25.40	22.86	10.16	7.62
24	30.48	27.94	10.16	7.62
24	30.48	27.94	17.78	15.24
28	35.56	33.02	10.16	7.62
28	35.56	33.02	17.78	15.24
32	40.54	38.10	17.78	15.24
40	50.80	48.26	17.78	15.24
42	53.21	50.80	17.78	15.24
48	60.80	58.42	17.78	15.24

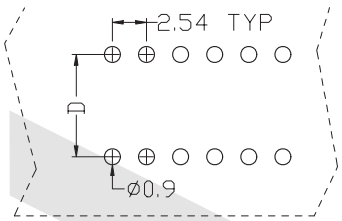

P.C.B Layout

ORDER INFORMATION

Product No.: KLS1-216-XX-D

Pos. No.
IC Socket 2.54mm Series
D=15.24mm plastic space
Without D=7.62mm plastic space
Number of Contacts: XX=08~48Pin

All specification & dimensions are subject to change,please call your nearest KLS sales represesntative for update information

IC Socket Series

KLS1-217B DUAL-IN-LINE IC Socket 1.778mm With Round Pin

Electrical Characteristics:

Current Rating:1 AMP
Insulator Resistance: 5000MΩmin. at DC 500V
Contact Resistance: 20mΩmax. at DC 100mA
Operating Temperature: -45°C~+105°C

Material:

Housing: 30% Glass filled PBT UL94V~0
Contacts: Brass or Phosphor Bronze
Plating: Selective gold plated: gold plated on
Mating area and
nickel plated on wire cutting area
Gold plated: 3u" over 50u" nickel
Tin plated: 100u" over 50u" nickel

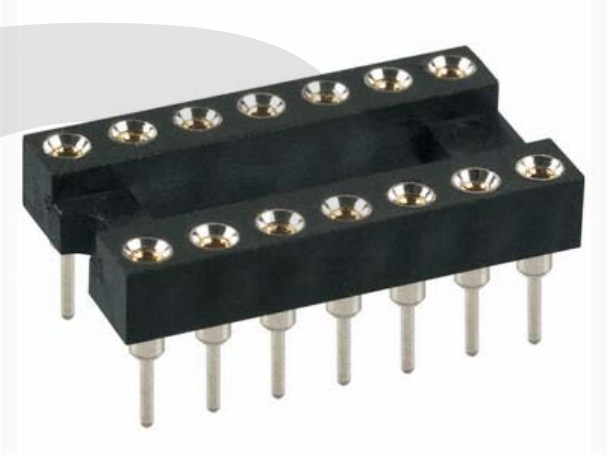

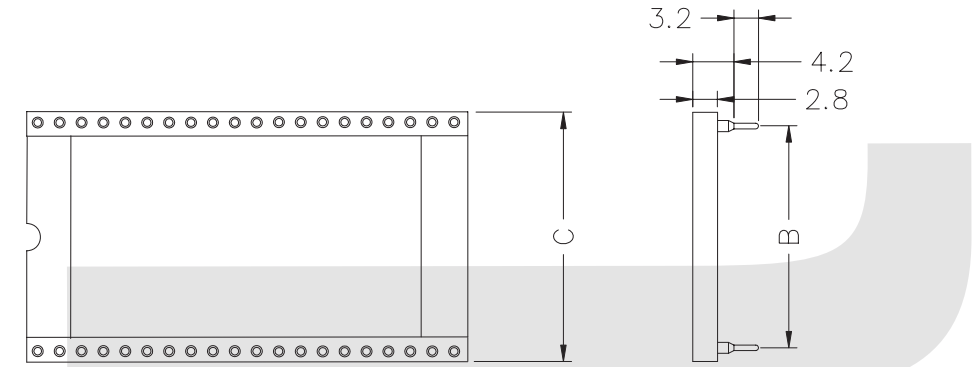

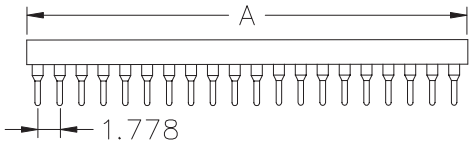

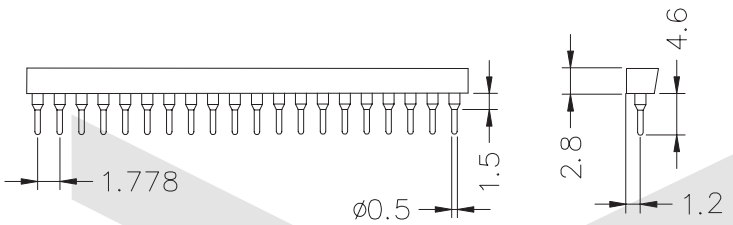

No. of Positions	A	B	C
24	21.8	10.16	12.7
28	25.2	10.16	12.7
30	27.0	10.16	12.7
32	28.8	10.16	12.7
48	43.1	10.16	12.7
20	18.1	15.24	17.64
24	21.7	15.24	17.64
28	25.2	15.24	17.64
40	35.8	15.24	17.64
42	37.7	15.24	17.64
48	43.1	15.24	17.64
52	46.7	15.24	17.64
56	50.2	15.24	17.64
64	57.3	15.24	17.64
68	60.9	15.24	17.64
64	57.3	19.05	21.45

ORDER INFORMATION

Product No.: KLS1-217B-XX-1

Pos. NO.
DUAL-IN-LINE IC Socket 1.778mm with Round Pin Series
Row spacing Code: 1:B=10. 16mm 2:B=15. 24mm 3:B=19. 05mm
Number of Contacts: XX=20-64Pin

IC Socket Series

KLS1-217 DUAL-IN-LINE IC Socket 2.54mm With Round Pin

Electrical Characteristics:

Current Rating:1 AMP
Insulator Resistance: 5000MΩmin. at DC 500V
Contact Resistance: 20mΩmax. at DC 100mA
Operating Temperature: -45°C~+105°C

Material:

Housing: PBT UL94V ~ 0
Contacts: PinBrass, TinPlated
Contacts: Clip-Beryllium copper, Gold Plated

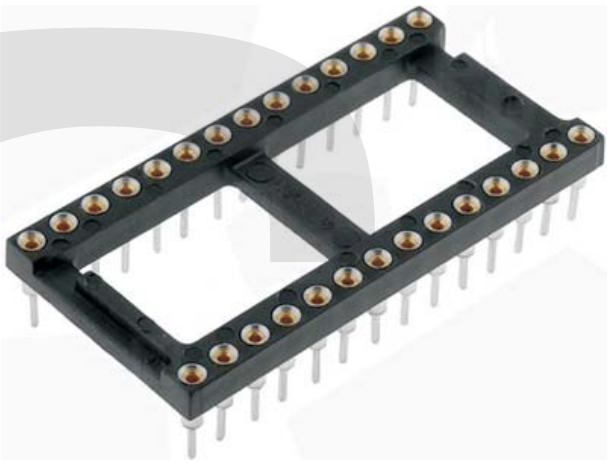

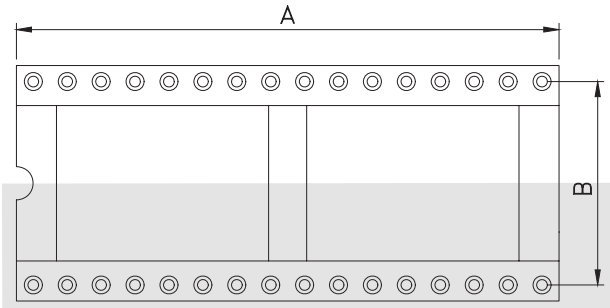

CIRCUITS	DIM.A	DIM.B	DIM.C
06	7.62	7.62	10.16
08	10.16	7.62	10.16
14	17.78	7.62	10.16
16	20.32	7.62	10.16
18	22.86	7.62	10.16
20	25.40	7.62	10.16
22	27.94	7.62	10.16
24	30.48	7.62	10.16
28	35.56	7.62	10.16
24	30.48	15.24	17.78
28	35.56	15.24	17.78
32	40.64	15.24	17.78
40	50.80	15.24	17.78
42	53.34	15.24	17.78
48	60.96	15.24	17.78

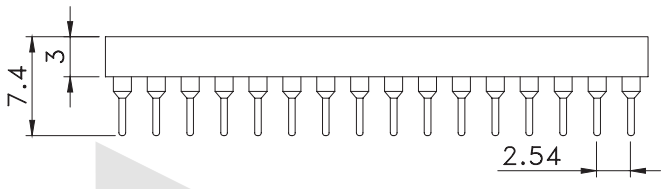

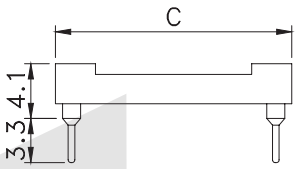

ORDER INFORMATION

Product No.: KLS1-217-XX-Y-1

Pos. NO.
DUAL-IN-LINE IC Socket 2.54mm with Round Pin Series
Number of Contacts: XX=06-48Pin
Row spacing Code: 1:B=7. 62mm 2:B=15. 24mm
Y-Imported material Z-Domestic material

IC Socket Series

KLS1-217T IC Socket 2.54mm With Round Pin SMT Type

Electrical Characteristics:

Current Rating:1 AMP
Insulator Resistance: 5000MΩmin. at DC 500V
Contact Resistance: 20mΩmax. at DC 100mA
Operating Temperature: -45°C~+105°C

Material:

Housing: PBT UL94V ~ 0
Contacts: PinBrass, TinPlated
Contacts: Clip-Beryllium copper, Gold Plated

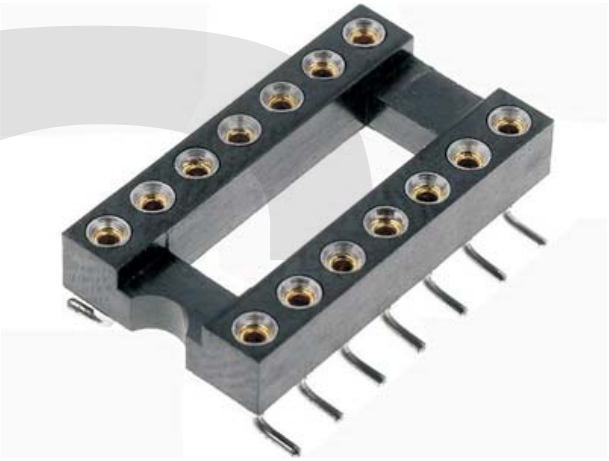

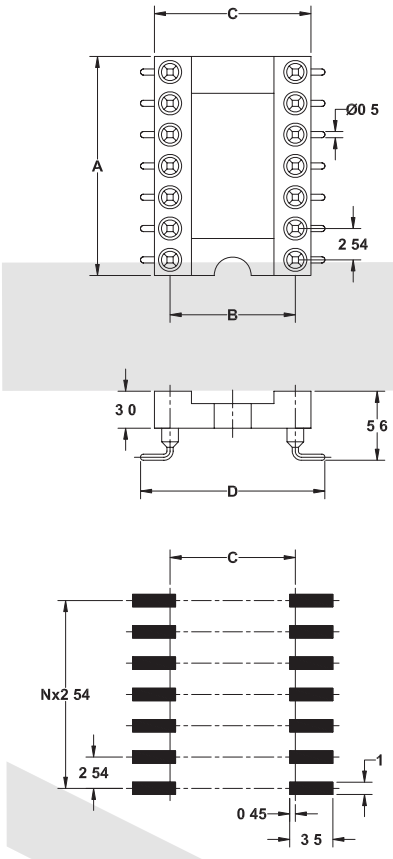

No of Pos t ons	A	B	C	D
06	7.6	7.62	10.1	12.26
08	10.1	7.62	10.1	12.26
10	12.6	7.62	10.1	12.26
12	15.2	7.62	10.1	12.26
14	17.7	7.62	10.1	12.26
16	20.3	7.62	10.1	12.26
18	22.8	7.62	10.1	12.26
20	25.3	7.62	10.1	12.26
22	27.8	7.62	10.1	12.26
24	30.4	7.62	10.1	12.26
28	35.5	7.62	10.1	12.26
20	25.4	10.16	12.6	14.80
22	27.8	10.16	12.6	14.80
24	30.4	10.16	12.6	14.80
28	35.5	10.16	12.6	14.80
32	40.6	10.16	12.6	14.80
24	30.5	15.24	17.7	19.88
28	35.5	15.24	17.7	19.88
32	40.6	15.24	17.7	19.88
36	45.7	15.24	17.7	19.88
40	50.8	15.24	17.7	19.88
42	53.3	15.24	17.7	19.88
48	60.9	15.24	17.7	19.88

ORDER INFORMATION

Product No.: KLS1-217T-XX-Z-1

Pos. NO.
DUAL-IN-LINE IC Socket 2.54mm with Round Pin Series
Number of Contacts: XX=06-48Pin
Row spacing Code: 1: B=7. 62mm 2: B=10. 16mm 3: B=15. 24mm
Y-Imported material Z-Domestic material

PLCC Socket Series

KLS1-210 PLCC CHIP CARRIER SOCKET SMT TYPE

Electrical Characteristics:

Current Rating: 1 AMP
Insulator Resistance: 5000M Ohm min. at DC 500V
Contact Resistance: 20m Ohm max. at DC 100mA
Operating Temperature: -45°C~+110°C
Soldering temperature:240°C .10 Seconds max

Material:

Housing: 30% Glass filed PPS&PBT UL94V-0
Contacts: Phosphor Bronze
Plating: Tin plated: 120u" over 80u" nickel



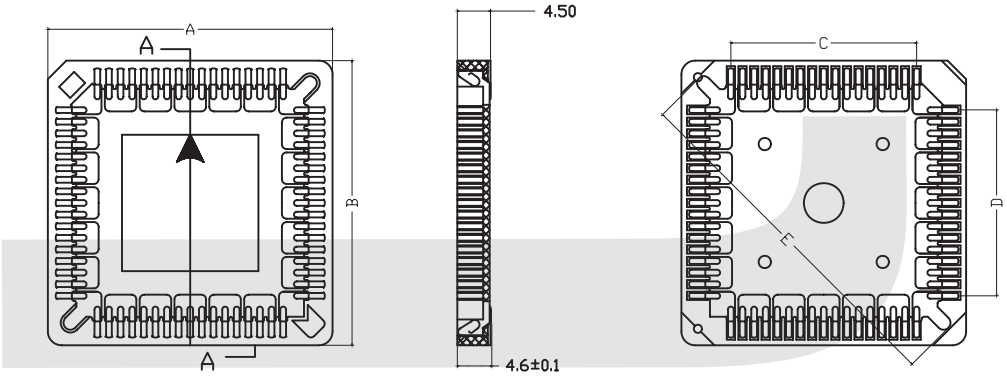

SECTION A-A

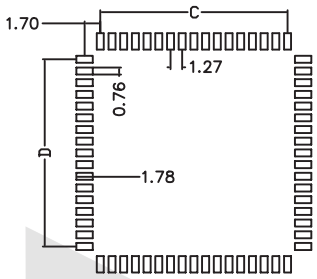

P.C.B LAYOUT

NO. OF CONTACT	A±0.2	B±0.2	C±0.1	D±0.1	E±0.2
20	15.66	15.66	5.08	5.08	17.28
28	18.20	18.20	7.62	7.62	20.87
32	1820	20.74	7.62	10.16	23.15
44	23.28	23.28	12.70	12.70	28.05
52	25.82	25.82	15.24	15.24	31.65
68	30.90	30.90	20.32	20.32	38.83
84	35.98	35.98	25.40	25.40	46.00

ORDER INFORMATION

Product No.: KLS1-210-S-XX-A

Pos. No.
PLCC CHIP CARRIER SOCKET Series
S=SMT
Number of Contacts: XX=20-84Pin
Color: A=Brown B=Black

PLCC Socket Series

KLS1-210 PLCC CHIP CARRIER SOCKET DIP TYPE

Electrical Characteristics:

Current Rating: 1 AMP
Insulator Resistance: 5000M Ohm min. at DC 500V
Contact Resistance: 20m Ohm max. at DC 100mA
Operating Temperature: -45ºC~+110ºC
Soldering temperature: 240ºC. 10seconds max



Material:

Housing: 30% Glass filed PPS&PBT UL94V-0
Contacts: Phosphor Bronze
Plating: Tin plated: 120u" over 80u" nickel

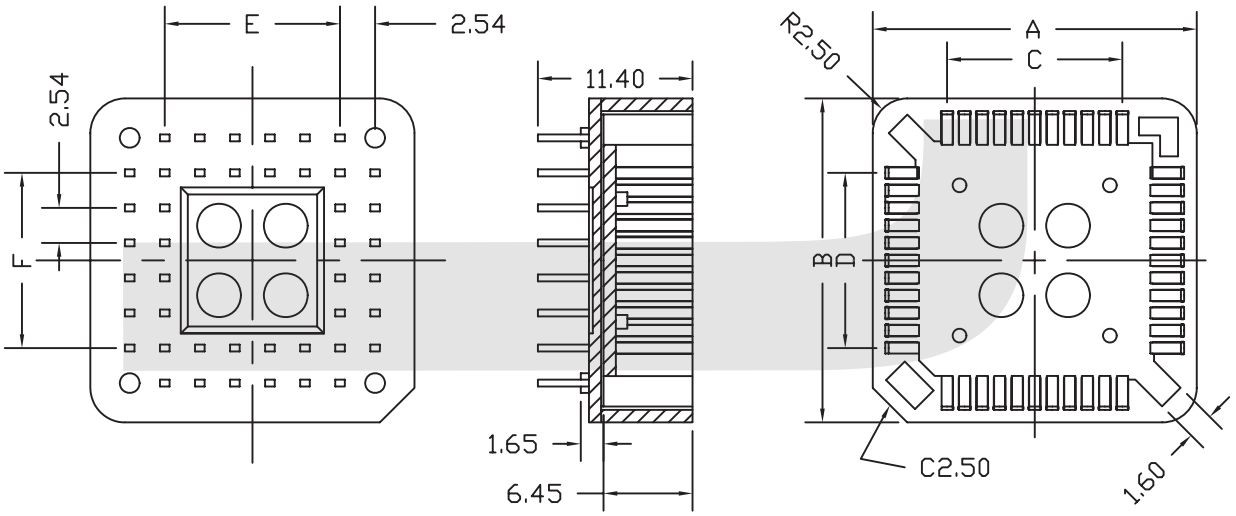

MIDDLE TYPE:

NO. OF CONTACT	A±0.15	B±0.15	C±0.1	D±0.1	E±0.1	F±0.1
20	15.50	15.50	5.08	5.08	5.08	5.08
28	18.04	18.04	7.62	7.62	7.62	7.62
32	18.04	20.60	7.62	10.16	7.62	10.16
44	23.48	23.48	12.70	12.70	12.70	12.70
52	25.88	25.88	15.24	15.24	15.24	15.24
68	31.04	31.04	20.32	20.32	20.32	20.32
84	36.04	36.04	25.40	25.40	25.40	25.40

ORDER INFORMATION

Product No.: KLS1-210-D-XX-B

Pos. No.
PLCC Chip Carrier Socket Series
D=DIP
Number of Contacts: XX=20-84Pin
Color: A=Brown B=Black

IC Socket Series

KLS1-209C IC Socket With Round Pin 1.778mm

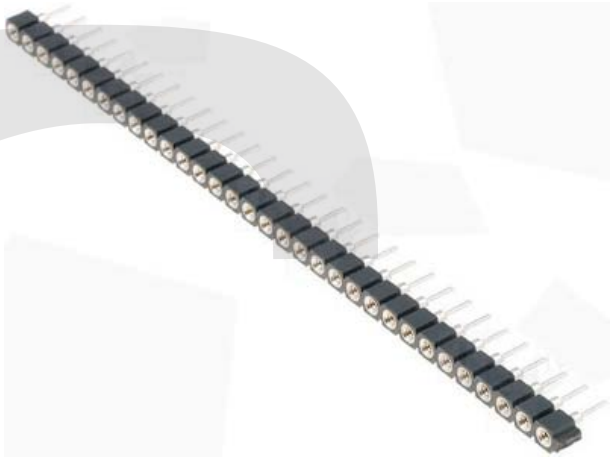

Electrical Characteristics:

Current Rating:1 AMP
Insulator Resistance: 5000MΩmin. at DC 500V
Contact Resistance: 20mΩmax. at DC 100mA
Operating Temperature: -45ºC~+105ºC

Material:

Housing: 30% Glass filled PBT UL94V-0
Contacts: Phosphor Bronze or Brass
Plating: Gold plated: 2u" over 50u" nickel
Tin plated: 100u" over 50u" nickel

Features:

*IC Socket Strips - with screw machind pins
*Siangle or double row - solder tail ~ standard 4 finger clip contacs

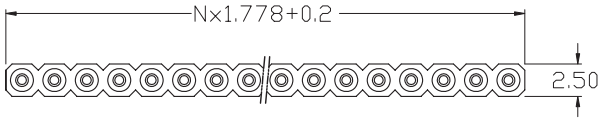

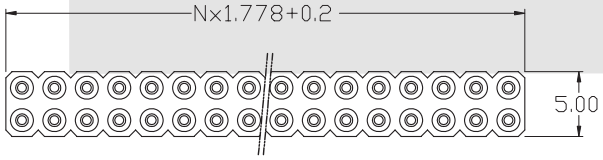

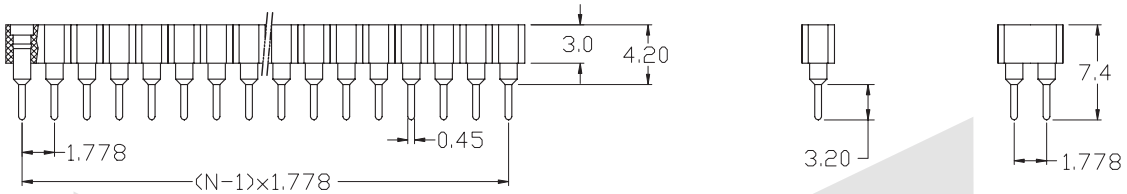

ORDER INFORMATION

Product No.: KLS1-209C-1-XX-S

Pos. No.
IC Socket With Round Pin 1.778mm
1=Single layer 2=Double layer
Total pin number
Straight pin

IC Socket Series

KLS1-209B IC Socket With Round Pin 2.00mm(0.079")

Electrical Characteristics:

Current Rating:1 AMP
Insulator Resistance: 5000MΩmin. at DC 500V
Contact Resistance: 20mΩmax. at DC 100mA
Operating Temperature: -45ºC~+105ºC

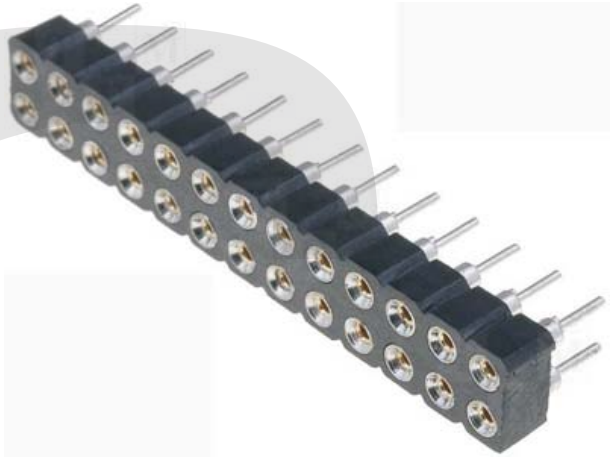

Material:

Housing: 30% Glass filled PBT UL94V-0
Contacts: Phosphor Bronze or Brass
Plating: Gold plated: 2u" over 50u" nickel
Tin plated: 100u" over 50u" nickel

Features:

*IC Socket Strips - with screw machind pins
*Siangle or double row - solder tail ~ standard 4 finger clip contacs

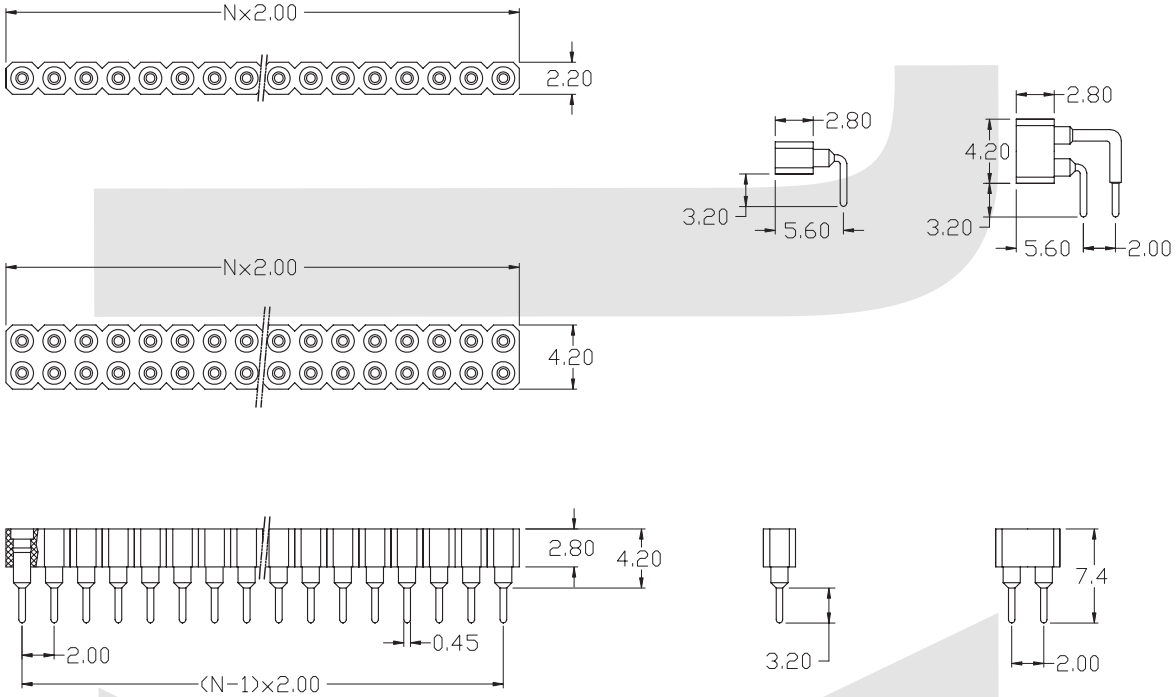

ORDER INFORMATION

Product No.: KLS1-209B-1-XX-S

Pos. No.
IC Socket With Round Pin 2.00mm
1=Single layer 2=Double layer
Total pin number
S=Straight R=Right

IC Socket Series

KLS1-209 IC Socket With Round Pin 2.54mm(0.100") Single layer Type

Electrical Characteristics:

Current Rating:1 AMP
Insulator Resistance: 5000MΩmin. at DC 500V
Contact Resistance: 20mΩmax. at DC 100mA
Operating Temperature: -45°C~+105°C



Material:

Housing: 30% Glass filled PBT UL94V-0
Contacts: Phosphor Bronze or Brass
Plating: Gold plated: 2u" over 50u" nickel
Tin plated: 100u" over 50u" nickel

Features:

*IC Socket Strips - with screw machind pins
*Siangle or double row - solder tail ~ standard 4 finger clip contacs

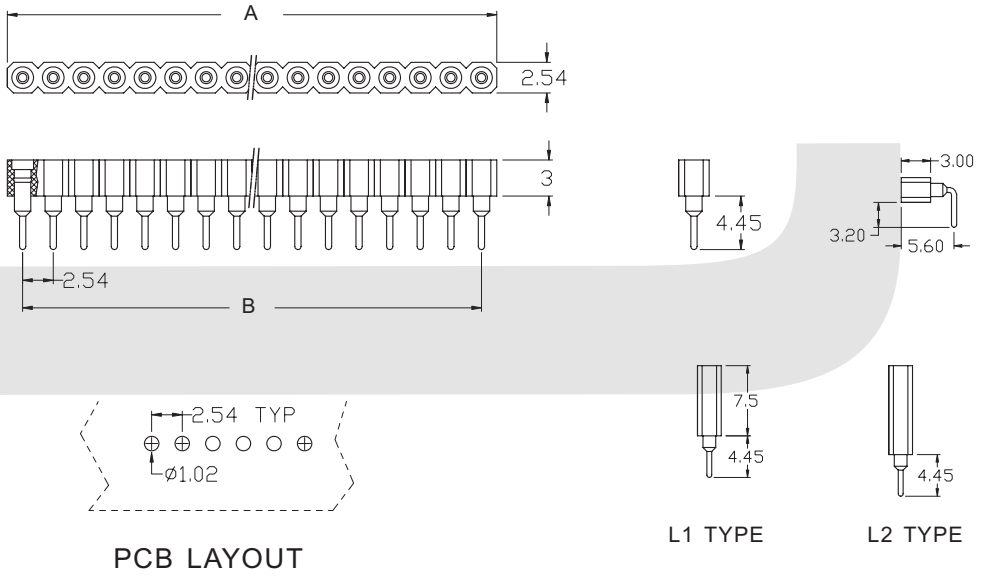

PCB LAYOUT

L1 TYPE

L2 TYPE

Position	2 Thru 80
Dimension	
A±0.2	2.54xNo. Of Positions
B±0.15	2.54xNo. Of Positions-2.54

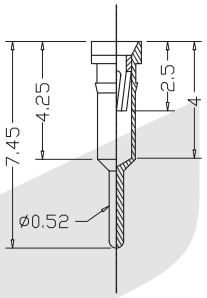

ORDER INFORMATION

Product No.: KLS1-209-1-XX-S

Pos. No.
IC Socket With Round Pin 2.54mm
1=Single layer 2=Double layer
Total pin number
S=Straight R=Right

IC Socket Series

KLS1-209 IC Socket With Round Pin 2.54mm(0.100") Double layer Type

Electrical Characteristics:

Current Rating:1 AMP
Insulator Resistance: 5000MΩmin. at DC 500V
Contact Resistance: 20mΩmax. at DC 100mA
Operating Temperature: -45°C~+105°C



Material:

Housing: 30% Glass filled PBT UL94V-0
Contacts: Phosphor Bronze or Brass
Plating: Gold plated: 2u" over 50u" nickel
Tin plated: 100u" over 50u" nickel

Features:

*IC Socket Strips - with screw machind pins
*Siangle or double row - solder tail ~ standard 4 finger clip contacs

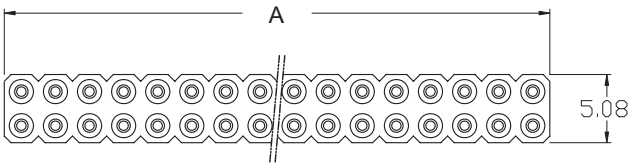

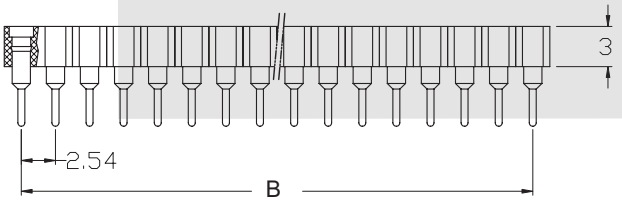

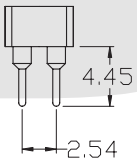

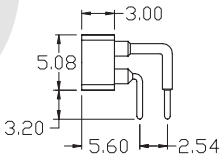

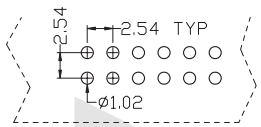

PCB LAYOUT

Position	2 Thru 80
Dimension	
A±0.2	2.54xNo. Of Positions
B±0.15	2.54xNo. Of Positions-2.54

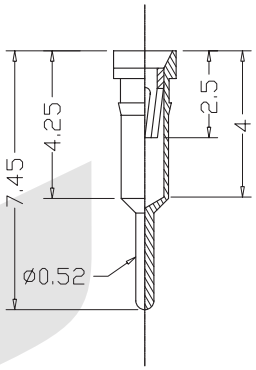

ORDER INFORMATION

Product No.: KLS1-209-2-XX-S

Pos. No.
IC Socket With Round Pin 2.54mm
1=Single layer 2=Double layer
Total pin number
S=Straight R=Right

DIP Socket Series

KLS1-108 ZIP DIP Socket 2.54mm(0.100″)/锁紧双列

Electrical Characteristics:

Current Rating:1 AMP
Insulator Resistance: 5000MΩmin. at DC 500V
Contact Resistance: 20mΩmax. at DC 100mA
Operating Temperature: -45ºC~+105ºC

Material:

Housing:30% Glass filled PBT UL94V-0
Contacts: Phosphor Bronze
Plating:Gold plated:3u" over 50u" nickel
Tin plated:100u" over 50u" nickel

Features:

* For DIPs with .100" lead spacing.
* Lever actuated zero instrtion force mechanism.
* Socket easily disassembles for repairability.
* Socket contact point of .110" below top surface of socket.

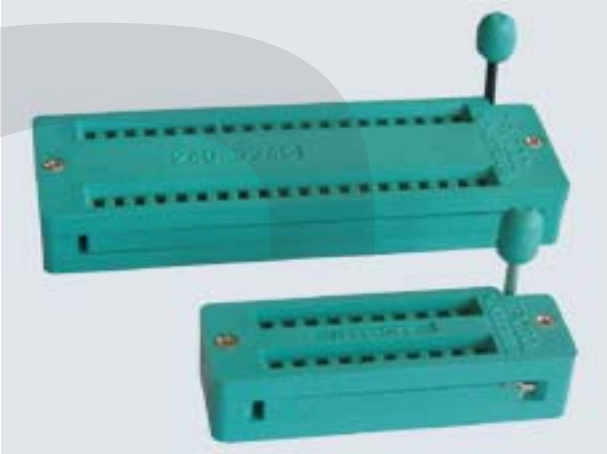

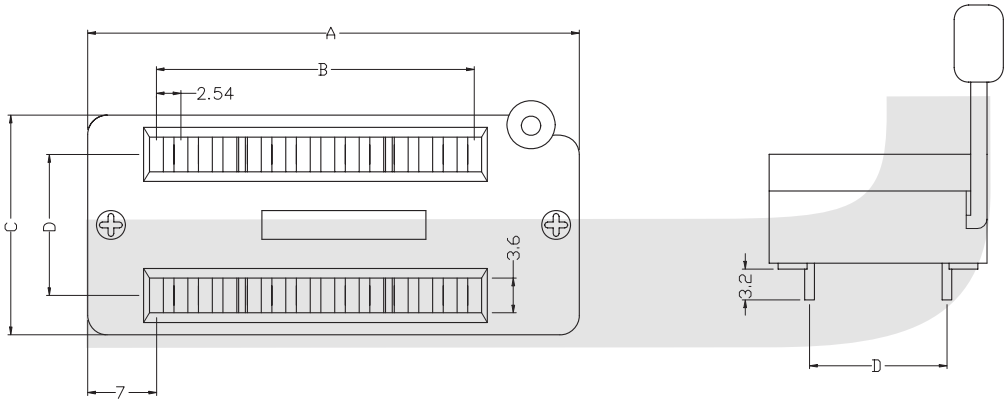

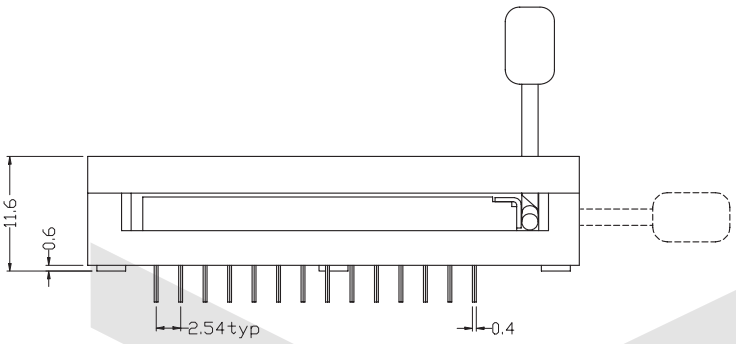

Dimension

Position	A	B	C	D
14	33.2	15.24	14.90	7.62
16	35.7	17.78	14.90	7.62
20	40.8	22.86	14.90	7.62
24A	45.9	27.94	14.90	7.62
24B	45.9	27.94	22.80	15.24
28	51.0	33.02	22.80	15.24
32	56.1	38.10	22.80	15.24
40	66.2	48.26	22.80	15.24
48	76.4	58.42	22.80	15.24

ORDER INFORMATION

Product No.: KLS1-108-XX-D

Pos. No.
ZIP DIP SOCKET 2.54mm Series
D=15.24mm plastic space Without D=7.62mm plastic space
Number of Contacts: XX=14-48Pin

DIP Socket Series

KLS1-108X DOUBLE DIP SOCKET 2.54mm(0.100")/万用型锁紧双列

Electrical Characteristics:

Current Rating:1 AMP
Insulator Resistance: 5000MΩmin. at DC 500V
Contact Resistance: 20mΩmax. at DC 100mA
Operating Temperature: -45°C~+105°C

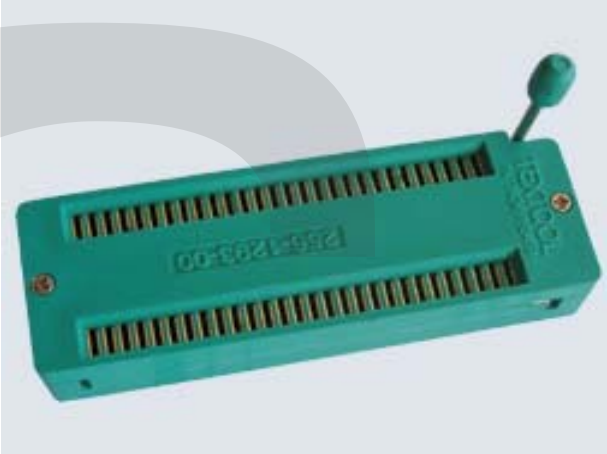

Material:

Housing:30% Glass filled PBT UL94V-0
Contacts: Phosphor Bronze
Plating:Gold plated:3u" over 50u" nickel
Tin plated:100u" over 50u" nickel

Features:

* For DiPs with .100" lead spacing.
* Extra wide contact zone allows insertion of DIPs with distance between rows fron .300" through .600".
* Lever actuated zero instrtion force mechanism.
* Socket easily disassembles for repairability.
* Socket contact point of .090" below top surface of socket.

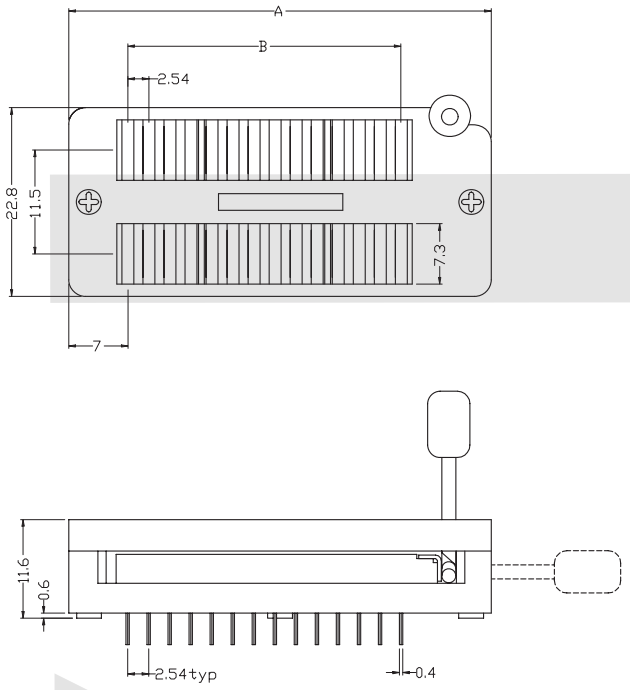

Dimension

Position	A	B
24	45.1	27.94
28	50.2	33.02
32	55.3	38.10
40	65.5	48.26
48	75.6	58.42

ORDER INFORMATION

Product No.: KLS1-108X-XX

Pos. No.
DOUBLE DIP SOCKET 2.54mm Series
Number of Contacts : XX=24-48Pin

DIP Socket Series

KLS1-108Y SHRINK DIP SOCKET 1.778mm(0.070")/密脚锁紧双列

Electrical Characteristics:

Current Rating:1 AMP
Insulator Resistance: 5000MΩmin. at DC 500V
Contact Resistance: 20mΩmax. at DC 100mA
Operating Temperature: -45ºC~+105ºC

Material:

Housing:30% Glass filled PBT UL94V-0
Contacts: Phosphor Bronze
Plating:Gold plated:3u" over 50u" nickel
Tin plated:100u" over 50u" nickel

Features:

* For DIPs with .070" lead spacing.
* Lever actuated zero instrtion force mechanism.
* Socket contact point of .090" below top surface of socket.

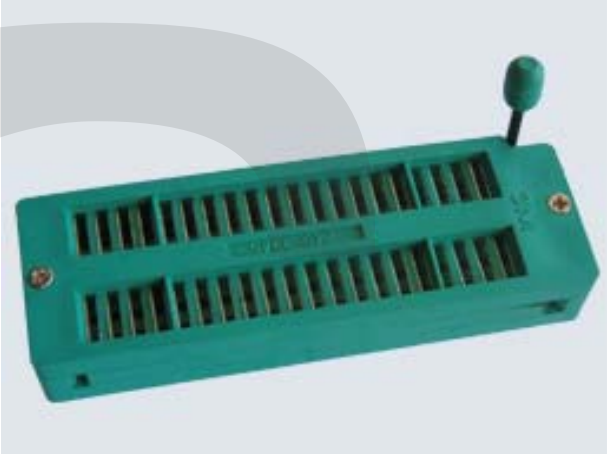

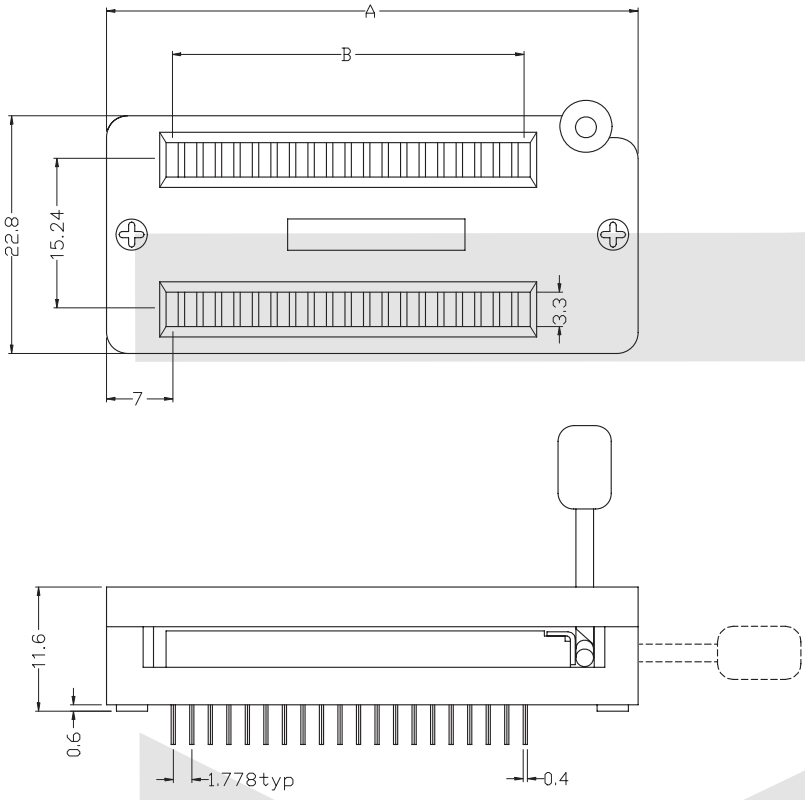

Dimension

Position	A	B
28	40.5	23.12
40	51.2	33.78
56	65.4	48.00

ORDER INFORMATION

Product No.: KLS1-108Y-XX

Pos. No.
SHRINK DIP SOCKET 1.778mm Series
Number of Contacts: XX=28-56Pin

KLS

1-Connectors & Connector Components-Разъемы, соединители и их узлы

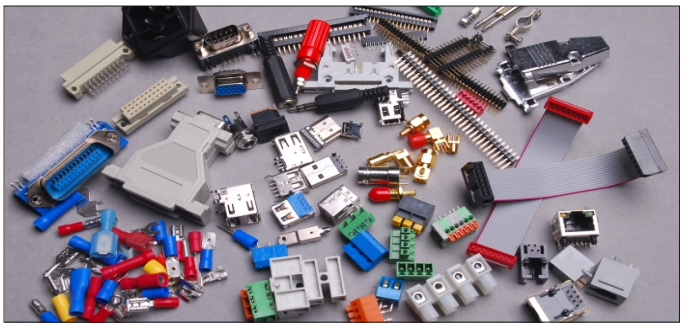

1-1 Wire to Board connectors
1-2 Board to Board connectors
1-3 Input/Output (Box to Box)
1-4 Socket & Card connectors
1-5 **Power connectors**
1-6 Audio & Video connectors
1-7 RF & Coax
1-8 Terminal Blocks & Strips
1-9 Terminals & Splices

More . . .



KLS ELECTRONIC CO; LTD. WWW.CNKLS.COM Email:sales@cnkls.com
Tel:0086 574 86824882 Fax:0086 574 86824882

DC Power Socket / DC Plug Series

KLS1-DCP-01 (DC Plug)

Housing Material/Center Pin Material: PBT or PA66/Brass
Rated Load: DC 30V 1.0A
Contact Resistance: ≤0.03Ω
Insulation Resistance: ≥100MΩ
Withstand Voltage: AC500V(50Hz) 1min
Actuating Force: 3~20N
Life:5000Time



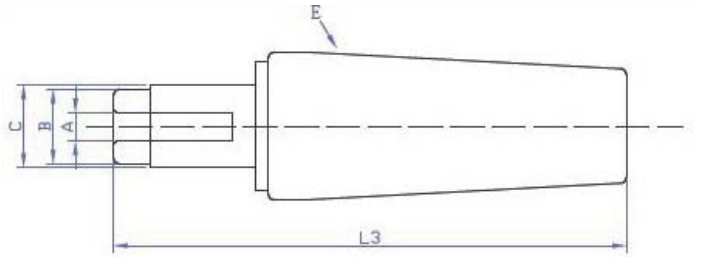

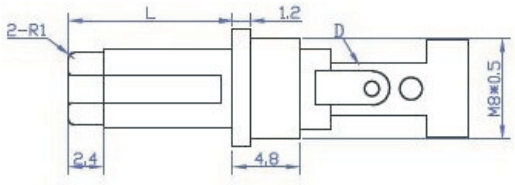

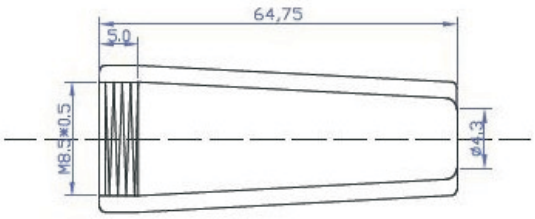

ORDER INFORMATION

Product NO. : KLS1-DCP-01-1.1A

Pos. NO.

Part No.	A (mm)	C (mm)	L (mm)
1.1A	1.1	3.5	9
1.1B	1.1	3.8	9
1.3A	1.3	3.5	9
2.1A	2.1	5.5	9
2.1B	2.1	5.5	14
2.5A	2.5	5.5	9
2.5B	2.5	5.5	14

DC Power Socket / DC Plug Series

KLS1-DCP-02 (DC Plug)

Housing Material/Center Pin Material: PBT or PA66/Brass
Rated Load: DC 30V 1.0A
Contact Resistance: ≤0.03Ω
Insulation Resistance: ≥100MΩ
Withstand Voltage: AC500V(50Hz) 1min
Actuating Force: 3~20N
Life:5000Time



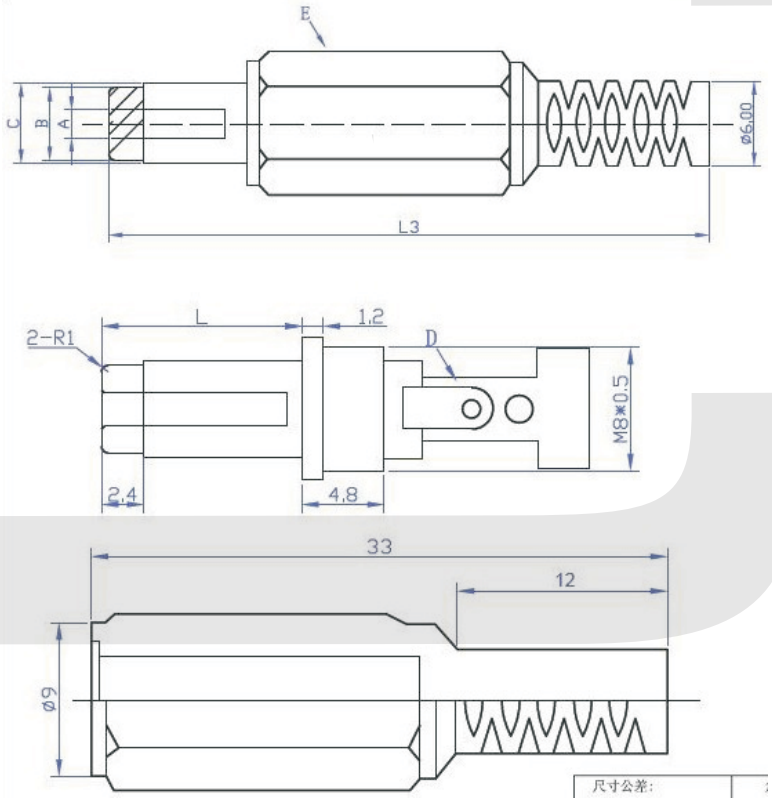

ORDER INFORMATION

Product NO. : KLS1-DCP-02-1.1A

Pos. NO.

ITEM.	A	C	L
KLS1-DCP-02-1.1A	1.1	3.5	9
KLS1-DCP-02-1.1B	1.1	3.8	9
KLS1-DCP-02-1.3A	1.3	3.5	9
KLS1-DCP-02-2.1A	2.1	5.5	9
KLS1-DCP-02-2.1B	2.1	5.5	14
KLS1-DCP-02-2.5A	2.5	5.5	9
KLS1-DCP-02-2.5B	2.5	5.5	14

I

DC Power Socket / DC Plug Series

KLS1-DCP-03(DCPlug)

Housing Material/Center Pin Material: PBT or PA66/Brass
Rated Load: DC 30V 1.0A
Contact Resistance: ≤0.03Ω
Insulation Resistance: ≥100MΩ
Withstand Voltage: AC500V(50Hz) 1min
Actuating Force: 3~20N
Life:5000Time



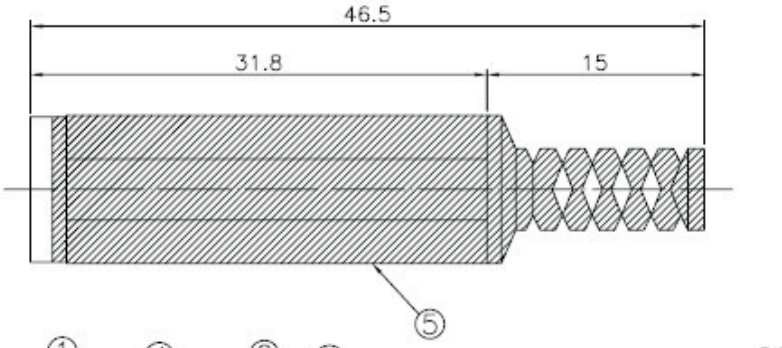

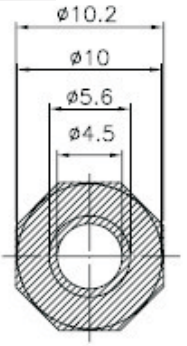

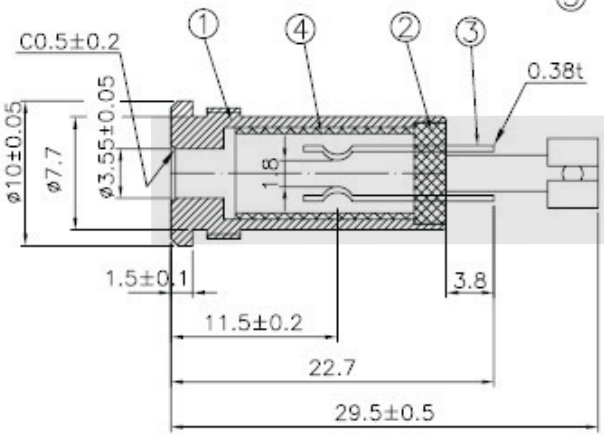

PJ-A-02-LF
LEADFREE

PART NO.	MATERIAL	PLATING
1.	BRASS	NICKEL
2.	A.B.S	WHITE
3.	P-BRONZE	
4.	PLASTIC TIBE	
5.	P.E	BLACK

RoHS Compliant

ORDER INFORMATION

Product NO. : KLS1-DCP-03-2.1A

Pos. NO.

ITEM.	A	C	L
KLS1-DCP-03-2.1A	2.1	5.5	31.8
KLS1-DCP-03-2.5A	2.5	5.5	31.8
KLS1-DCP-03-3.5A	3.5	5.5	31.8

DC Power Socket / DC Plug Series

KLS1-DCP-04 (DC Plug)



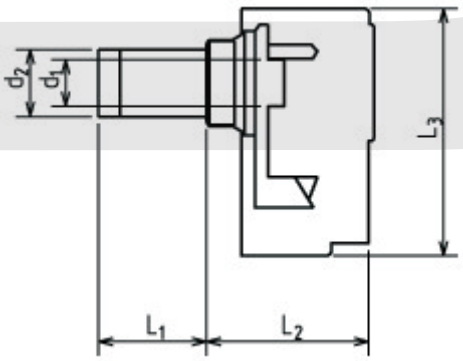

ORDER INFORMATION

Product NO. : KLS1-DCP-04-2.1A

Pos. NO.

Type	d1, мм	d2, мм	L1, мм	L2, мм	L3, мм
2.1A	2.1	5.5	14	13	20
2.1B	2.1	5.5	9	13	20
2.5A	2.5	5.5	14	13	20
2.5B	2.5	5.5	9	13	20
1.35A	1.35	3.45	9	11.5	20
1.0A	1	3.8	9	11.5	20

DC JACK Series

I

KLS1-DJK-00A DC Jack Type

Electrical Specification:

Rated Load : DC 30V 1A
Contact resistance : 30mΩ Max
Insulation resistance: 100MΩ Min
Withstand voltage : AC 500V(50Hz) 1min
Actuating Force: 3-20N
Life: 5000 cycles
Operating Temperature: -30°C~+70°C



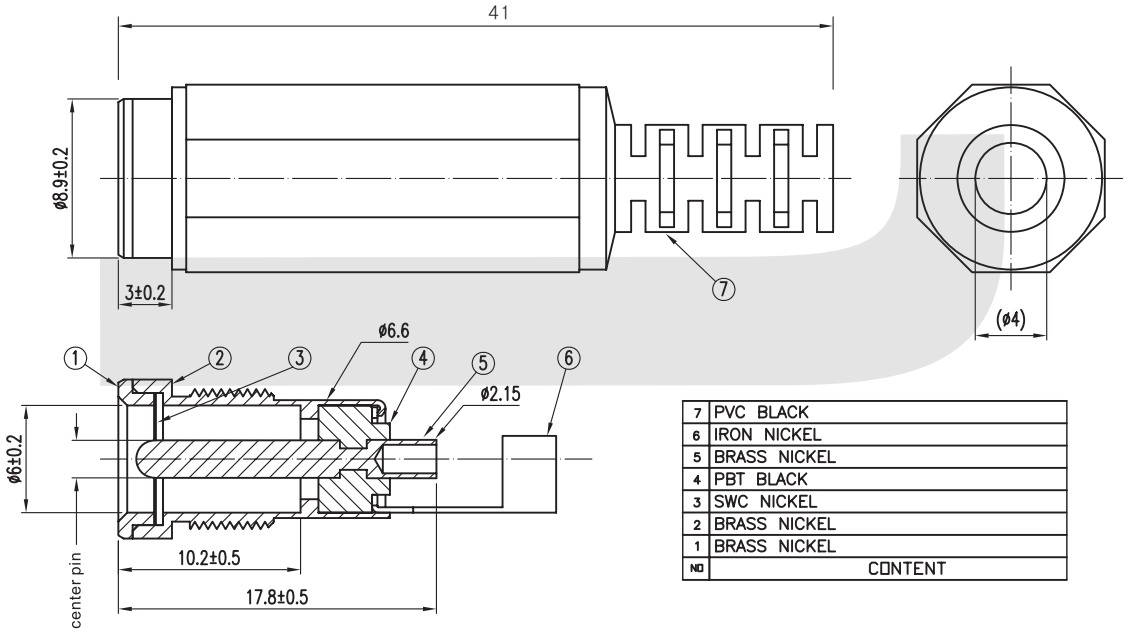

NO	CONTENT
7	PVC BLACK
6	IRON NICKEL
5	BRASS NICKEL
4	PBT BLACK
3	SWC NICKEL
2	BRASS NICKEL
1	BRASS NICKEL

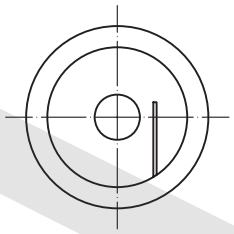

ITEM NO.	center pin
DJK-00A	2.1
DJK-00B	2.5

ORDER INFORMATION

Product NO.: KLS1-DJK-00A-2.1

Center Pin Dimension
DC Jack Type

DC JACK Series

KLS1-DC-001A DIP DC Jack Type



Electrical Specification:

Rated Load : DC 30V 0.5A
Contact resistance : 30mΩ Max
Insulation resistance: 100MΩ Min
Withstand voltage : AC 500V(50Hz) 1min
Actuating Force: 3-20N
Life: 5000 cycles
Operating Temperature: -30°C~+70°C

Materials

Plastic: PBT
Centre Pin: Copper, Nickel Plated
Terminal 1: Brass, Tin Plated
Terminal 2: Copper Alloy, Tin Plated
Terminal 3: Brass, Tin Plated

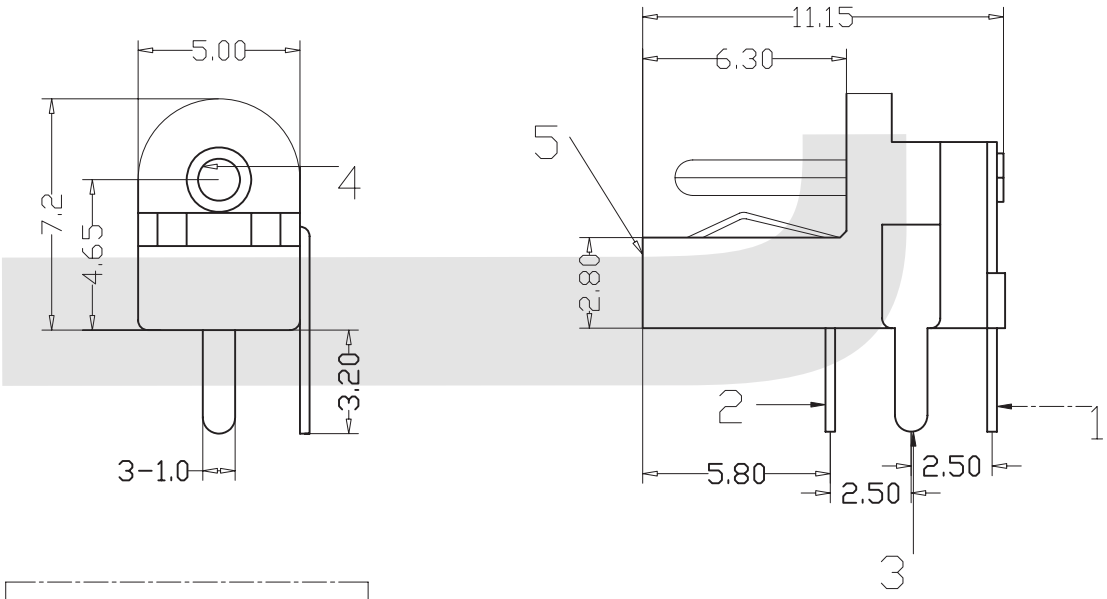

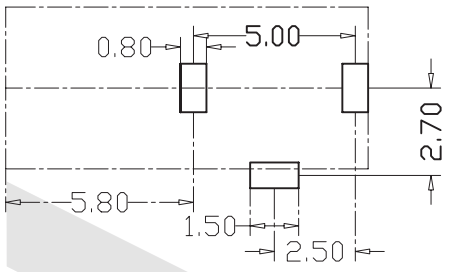

MODEL NO.	DC-001A
SCHEMATIC	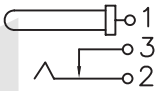
CENTER PIN	ø1.0mm
	ø1.3mm

ORDER INFORMATION

Product NO.: KLS1-DC-001A-1.0

Pos. NO.
Center Pin Dimension
DC Jack Type

DC JACK Series

I

KLS1-DC-001B DIP DC Jack Type



Electrical Specification:

Rated Load : DC 30V 0.5A
Contact resistance : 30mΩ Max
Insulation resistance: 100MΩ Min
Withstand voltage : AC 500V(50Hz) 1min
Actuating Force: 3-20N
Life: 5000 cycles
Operating Temperature: -30°C~+70°C

Materials

Plastic: PBT
Centre Pin: Copper, Nickel Plated
Terminal 1: Brass, Tin Plated
Terminal 2: Copper Alloy, Tin Plated
Terminal 3: Brass, Tin Plated

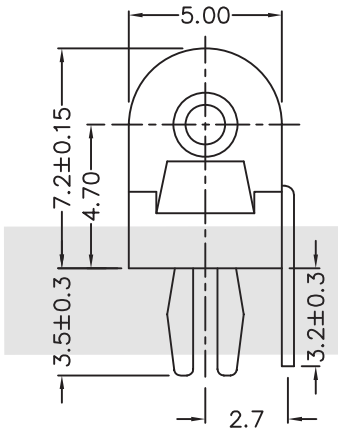

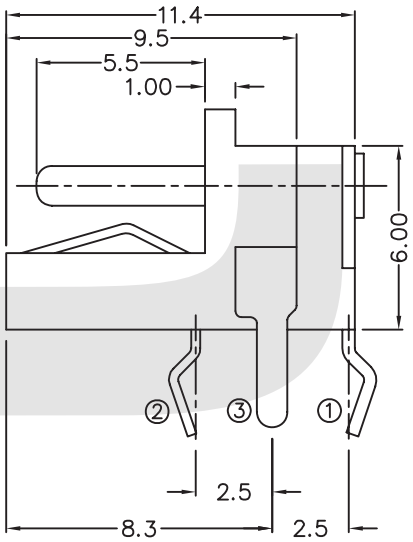

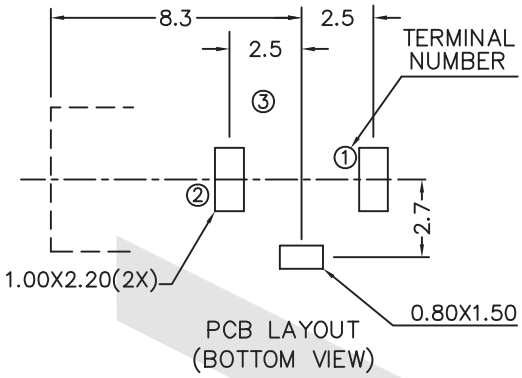

MODEL NO.	DC-001B
SCHEMATIC	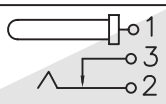
CENTER PIN	ø 1.0mm
	ø 1.3mm

ORDER INFORMATION

Product NO.: KLS1-DC-001B-1.0

Pos. NO.
Center Pin Dimension
DC Jack Type

DC JACK Series

I

KLS1-DC-002A DIP DC Jack Type



Electrical Specification:

Rated Load : DC 30V 0.5A
Contact resistance : 30mΩ Max
Insulation resistance: 100MΩ Min
Withstand voltage : AC 500V(50Hz) 1min
Actuating Force: 3-20N
Life: 5000 cycles
Operating Temperature: -30°C~+70°C

Materials

Plastic: PBT
Centre Pin: Copper, Nickel Plated
Terminal 1: Brass, Tin Plated
Terminal 2: Copper Alloy, Tin Plated
Terminal 3: Brass, Tin Plated

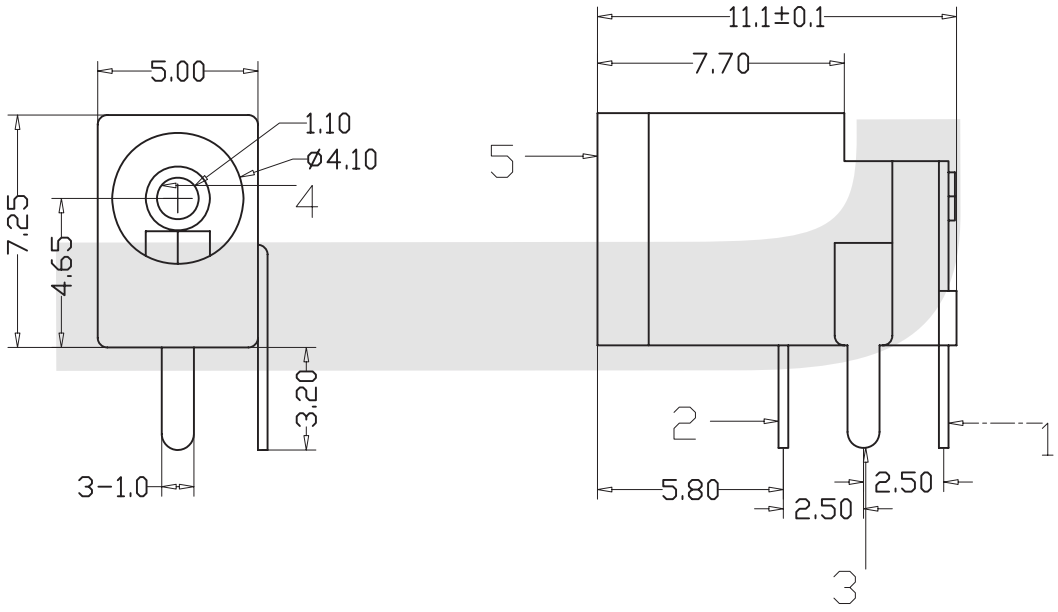

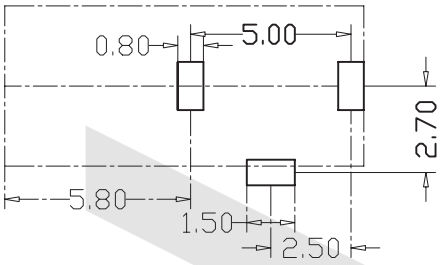

MODEL NO.	DC-002A
SCHEMATIC	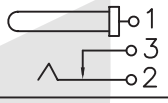
CENTER PIN	ø 1.0mm
	ø 1.3mm

ORDER INFORMATION

Product NO.: KLS1-DC-002A-1.0

Pos. NO.
Center Pin Dimension
DC Jack Type

DC JACK Series

I

KLS1-DC-002B DIP DC Jack Type



Electrical Specification:

Rated Load : DC 30V 0.5A
Contact resistance : 30mΩ Max
Insulation resistance: 100MΩ Min
Withstand voltage : AC 500V(50Hz) 1min
Actuating Force: 3-20N
Life: 5000 cycles
Operating Temperature: -30°C~+70°C

Materials

Plastic: PBT
Centre Pin: Copper, Nickel Plated
Terminal 1: Brass, Tin Plated
Terminal 2: Copper Alloy, Tin Plated
Terminal 3: Brass, Tin Plated

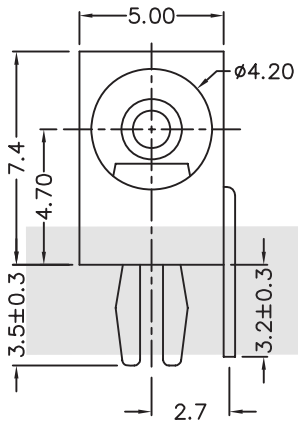

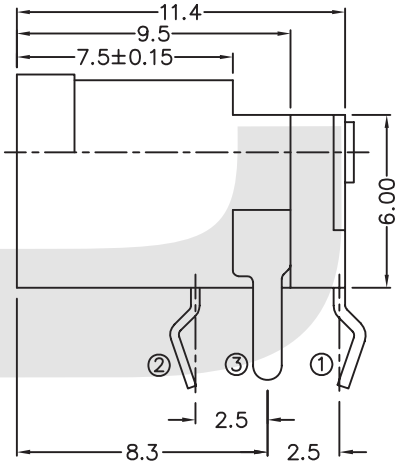

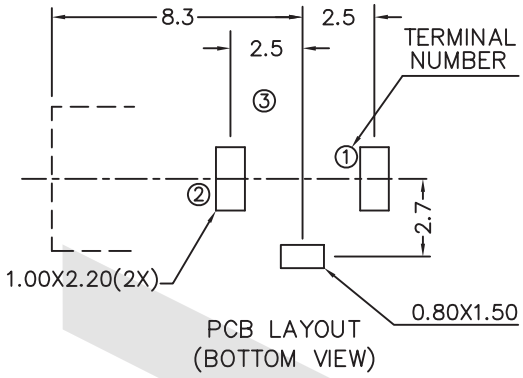

MODEL NO.	DC-002B
SCHEMATIC	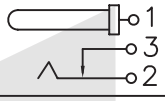
CENTER PIN	ø 1.0mm
	ø 1.3mm

ORDER INFORMATION

Product NO.: KLS1-DC-002B-1.0

Pos. NO.
Center Pin Dimension
DC Jack Type

DC JACK Series

I

KLS1-DC-003A DIP DC Jack Type



Electrical Specification:

Rated Load : DC 30V 1A
Contact resistance : 30mΩ Max
Insulation resistance: 100MΩ Min
Withstand voltage : AC 500V(50Hz) 1min
Actuating Force: 3-20N
Life: 5000 cycles
Operating Temperature: -30°C~+70°C

Materials

Plastic: PBT
Centre Pin: Copper, Nickel Plated
Terminal 1: Brass, Tin Plated
Terminal 2: Copper Alloy, Tin Plated
Terminal 3: Brass, Tin Plated

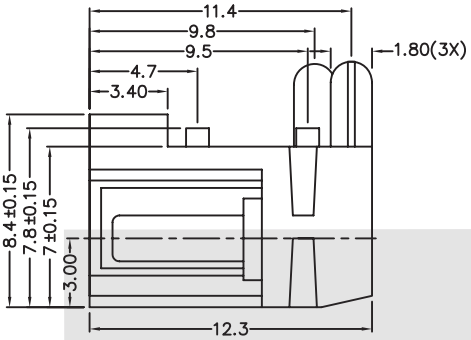

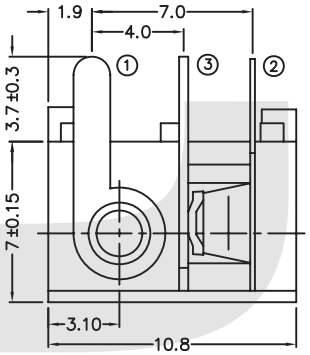

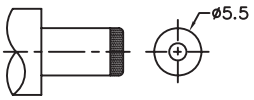

DC MATE PLUG

MODEL NO.	DC-003A
SCHEMATIC	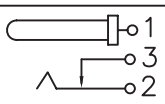
CENTER PIN	ø 2.0mm
	ø 2.5mm

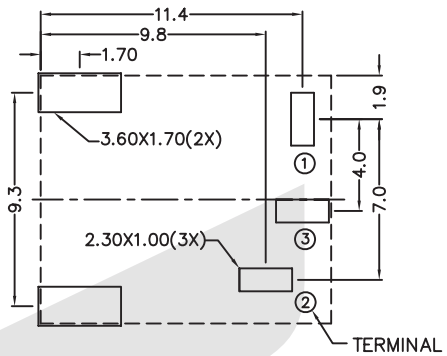

PCB LAYOUT
(BOTTOM VIEW)

ORDER INFORMATION

Product NO.: KLS1-DC-003A-2.0

Pos. NO.
Center Pin Dimension
DC Jack Type

DC JACK Series

I

KLS1-DC-005A DIP DC Jack Type



Electrical Specification:

Rated Load : DC 30V 1A
Contact resistance : 30mΩ Max
Insulation resistance: 100MΩ Min
Withstand voltage : AC 500V(50Hz) 1min
Actuating Force: 3-20N
Life: 5000 cycles
Operating Temperature: -30°C~+70°C

Materials

Plastic: PBT
Centre Pin: Copper, Nickel Plated
Terminal 4: Brass, Tin Plated
Terminal 2: Copper Alloy, Tin Plated
Terminal 3: Brass, Tin Plated

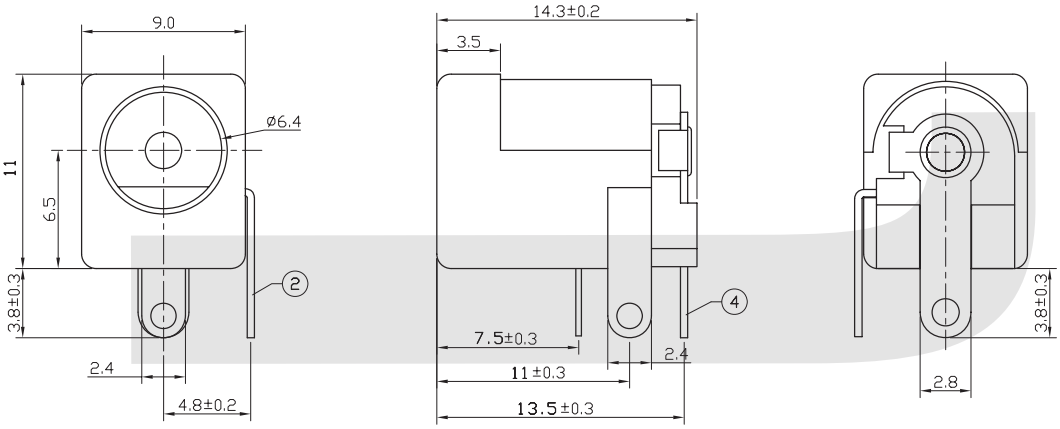

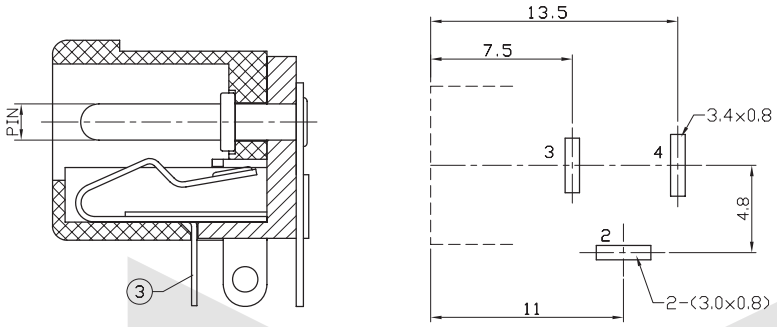

P.C.B Layout

MODEL NO.	DC-005A
SCHEMATIC	4 / 3 / 2
CENTER PIN	ø 2.0mm
	ø 2.5mm

ORDER INFORMATION

Product NO.: KLS1-DC-005A-2.0

Pos. NO.
Center Pin Dimension
DC Jack Type

DC JACK Series

I

KLS1-DC-005B DIP DC Jack Type



Electrical Specification:

Rated Load : DC 30V 1A
Contact resistance : 30mΩ Max
Insulation resistance: 100MΩ Min
Withstand voltage : AC 500V(50Hz) 1min
Actuating Force: 3-20N
Life: 5000 cycles
Operating Temperature: -30°C~+70°C

Materials

Plastic: PBT
Centre Pin: Copper, Nickel Plated
Terminal 1: Brass, Tin Plated
Terminal 2: Copper Alloy, Tin Plated
Terminal 3: Brass, Tin Plated

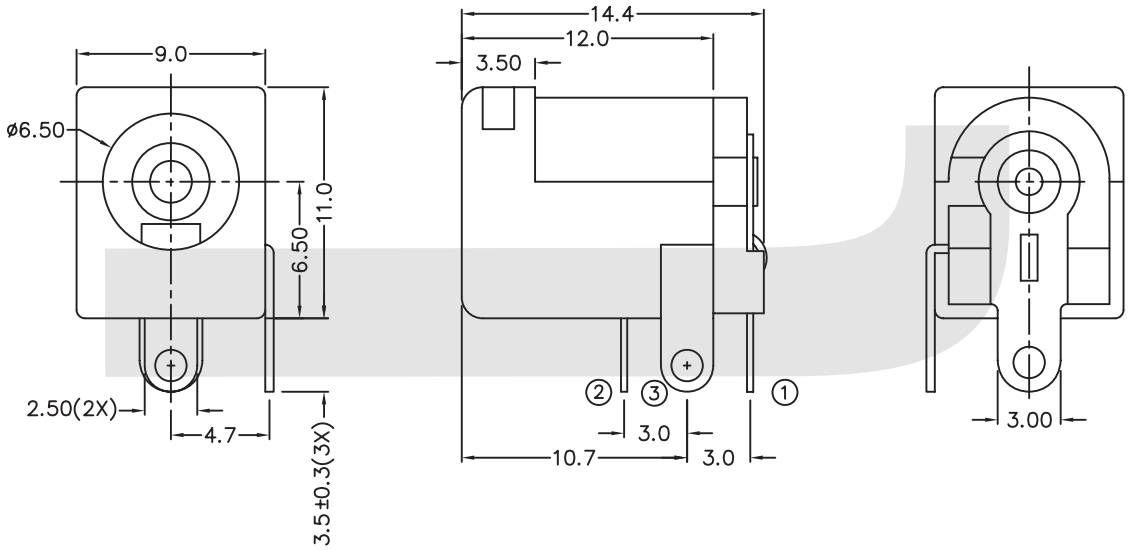

MODEL NO.	DC-005B
SCHEMATIC	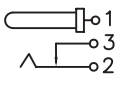
CENTER PIN	ø1.65mm
	ø2.0mm
	ø2.5mm

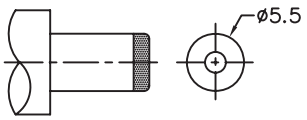

DC MATE PLUG

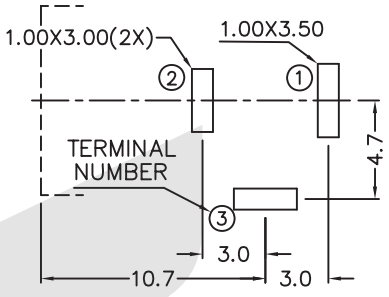

PCB LAYOUT

ORDER INFORMATION

Product NO.: KLS1-DC-005B-2.0

Pos. NO.
Center Pin Dimension
DC Jack Type

DC JACK Series

KLS1-DC-011A DIP DC Jack Type



Electrical Specification:

Rated Load : DC 30V 1A
Contact resistance : 30mΩ Max
Insulation resistance: 100MΩ Min
Withstand voltage : AC 500V(50Hz) 1min
Actuating Force: 3-20N
Life: 5000 cycles
Operating Temperature: -30°C~+70°C

Materials

Plastic: PBT or PA66
Centre Pin: Copper, Nickel Plated
Terminal 4: Brass, Tin Plated
Terminal 2: Copper Alloy, Tin Plated
Terminal 3: Brass, Tin Plated
Terminal 5: Brass, Tin Plated

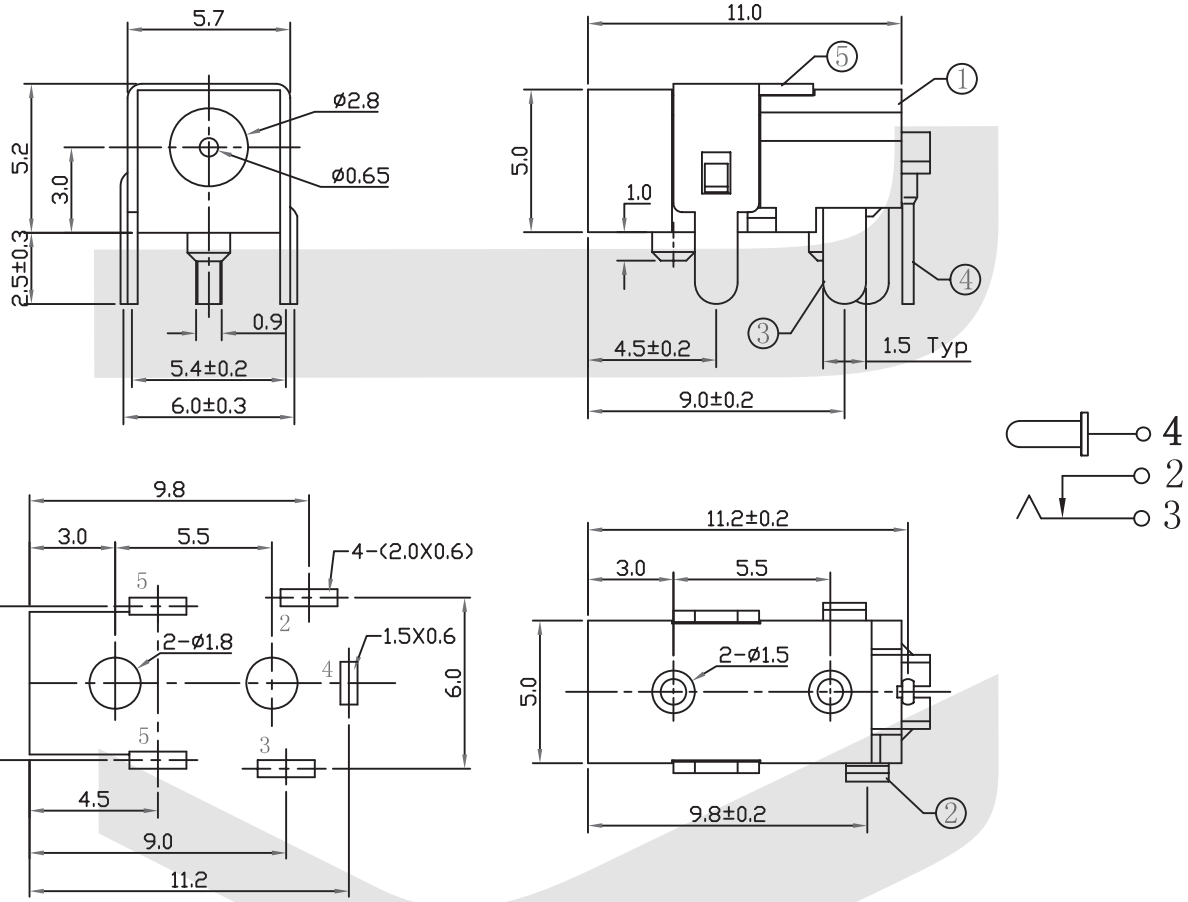

ORDER INFORMATION

Product NO.: KLS1-DC-011A

Pos. NO.
DC Jack Type

DC JACK Series

I

KLS1-DC-012B DIP DC Jack Type



Electrical Specification:

Rated Load : DC 30V 1A
Contact resistance : 30mΩ Max
Insulation resistance: 100MΩ Min
Withstand voltage : AC 500V(50Hz) 1min
Actuating Force: 3-20N
Life: 5000 cycles
Operating Temperature: -30°C~+70°C

Materials

Housing: PBT
Cover:PBT
Centre Pin: Copper, Nickel Plated
Terminal 1: Brass, Tin Plated
Terminal 2: Copper Alloy, Tin Plated
Terminal 3: Brass, Tin Plated

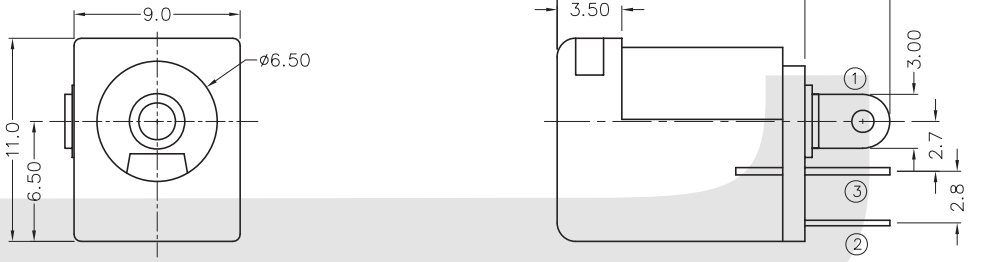

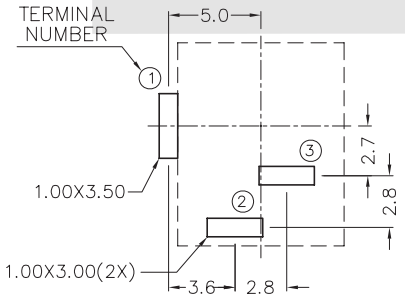

PCB LAYOUT

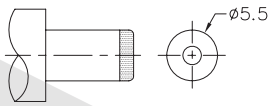

DC MATE PLUG

MODEL NO.	DC-012B
SCHEMATIC	
CENTER PIN	ø 1.65mm
	ø 2.0mm
	ø 2.5mm

ORDER INFORMATION

Product NO.: KLS1-DC-012B-2.0

Pos. NO.
Center Pin Dimension
DC Jack Type

DC JACK Series

I

KLS1-DC-015A DIP DC Jack Type



Electrical Specification:

Rated Load : DC 30V 1A
Contact resistance : 30mΩ Max
Insulation resistance: 100MΩ Min
Withstand voltage : AC 500V(50Hz) 1min
Actuating Force: 3-20N
Life: 5000 cycles
Operating Temperature: -30°C~+70°C

Materials

Housing: PBT
Cover:PBT
Centre Pin: Copper, Nickel Plated
Terminal 1: Brass, Tin Plated
Terminal 2: Copper Alloy, Tin Plated
Terminal 3: Brass, Tin Plated

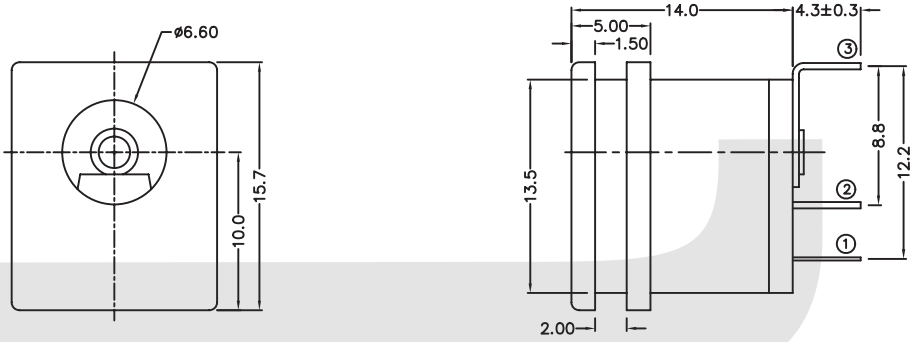

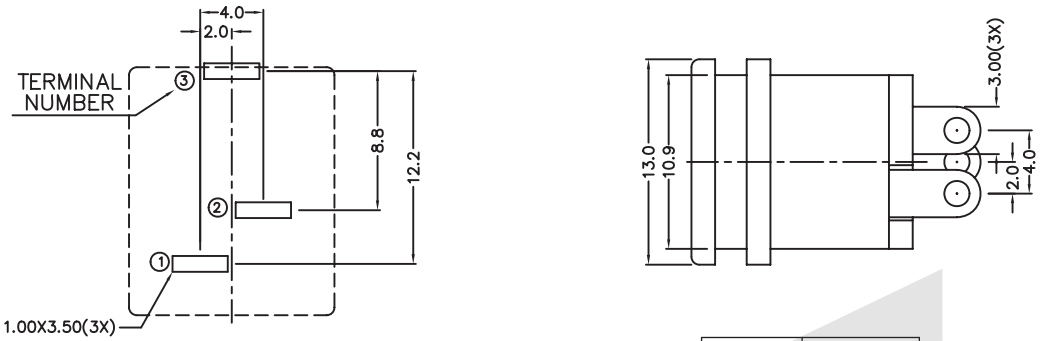

MODEL NO.	DC-015A
SCHEMATIC	3 2 1
CENTER PIN	ø 2.0mm / ø 2.5mm

ORDER INFORMATION

Product NO.: KLS1-DC-015A-2.0

Pos. NO.
Center Pin Dimension
DC Jack Type

DC JACK Series

I

KLS1-DC-016 DIP DC Jack Type



Electrical Specification:

Rated Load : DC 30V 1A
Contact resistance : 30mΩ Max
Insulation resistance: 100MΩ Min
Withstand voltage : AC 500V(50Hz) 1min
Actuating Force: 3-20N
Life: 5000 cycles
Operating Temperature: -30°C~+70°C

Materials

Housing: PBT
Cover:PBT
Centre Pin: Copper, Nickel Plated
Terminal 1: Brass, Tin Plated
Terminal 2: Copper Alloy, Tin Plated
Terminal 3: Brass, Tin Plated

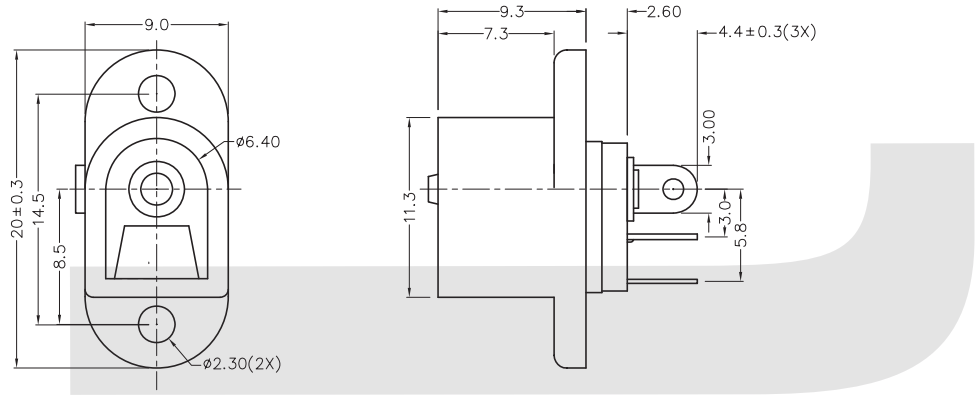

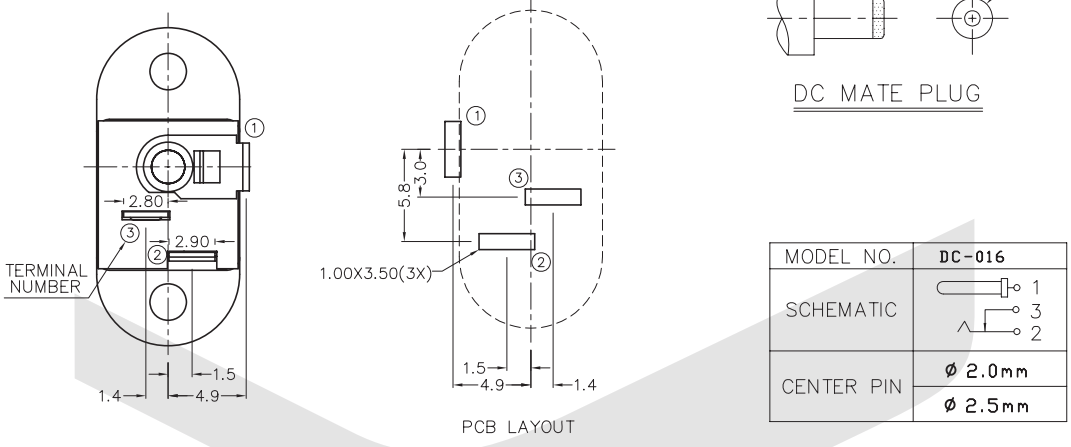

MODEL NO.	DC-016
SCHEMATIC	1 3 2
CENTER PIN	ø 2.0mm
	ø 2.5mm

ORDER INFORMATION

Product NO.: KLS1- DC-016 -2.0

Pos. NO.
Center Pin Dimension
DC Jack Type

DC JACK Series

I

KLS1-DC-017 DIP DC Jack Type



Electrical Specification:

Rated Load : DC 30V 1A
Contact resistance : 30mΩ Max
Insulation resistance: 100MΩ Min
Withstand voltage : AC 500V(50Hz) 1min
Actuating Force: 3-20N
Life: 5000 cycles
Operating Temperature: -30°C~+70°C

Materials

Housing: PBT
Cover:PBT
Centre Pin: Copper, Nickel Plated
Terminal 1: Brass, Tin Plated
Terminal 2: Copper Alloy, Tin Plated
Terminal 3: Brass, Tin Plated

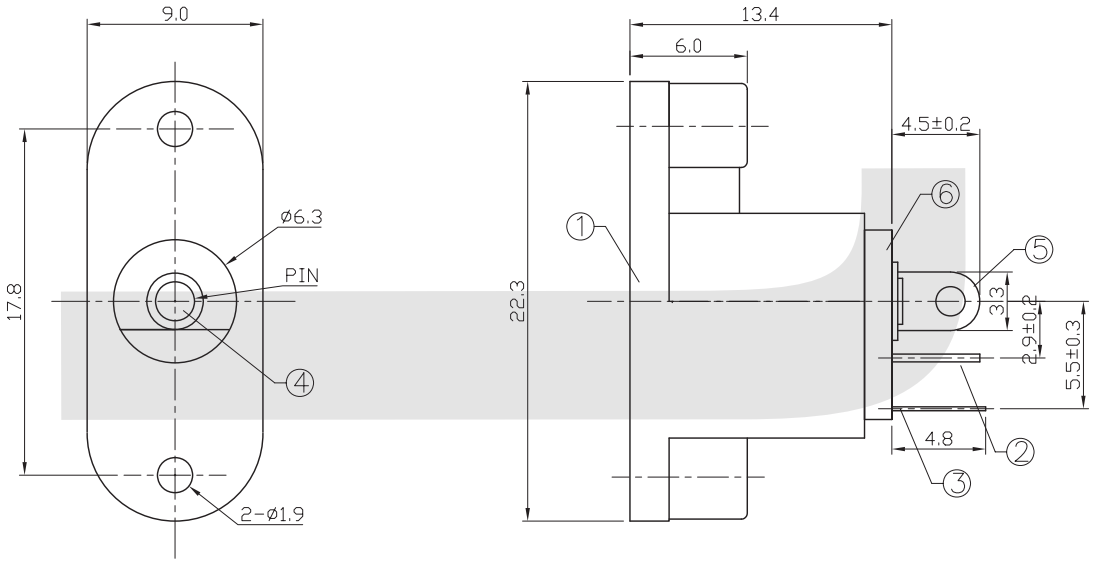

MODEL NO.	DC-017
SCHEMATIC	1 3 2
CENTER PIN	ø 2.0mm ø 2.5mm

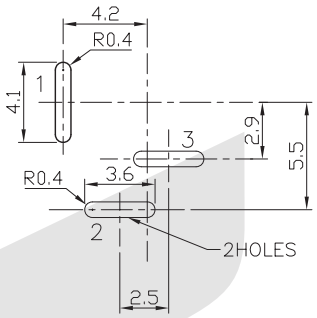

PCB LAYOUT

ORDER INFORMATION

Product NO.: KLS1- DC-017 -2.0

Pos. NO.
Center Pin Dimension
DC Jack Type

DC JACK Series

I

KLS1-DC-022A DIP DC Jack Type

Electrical Specification:

Rated Load : DC 30V 1A
Contact resistance : 30mΩ Max
Insulation resistance: 100MΩ Min
Withstand voltage : AC 500V(50Hz) 1min
Actuating Force: 3-20N
Life: 5000 cycles
Operating Temperature: -30°C~+70°C



Materials

Housing: PBT
Cover:PBT
Centre Pin: Copper, Nickel Plated
Terminal 5: Brass, Tin Plated
Terminal 3: Stainless Steel, Tin Plated
Terminal 2: Brass, Tin Plated

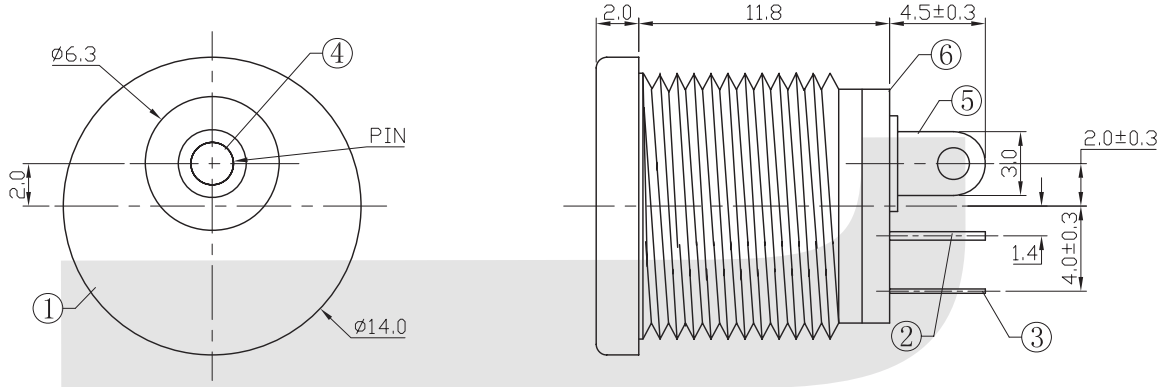

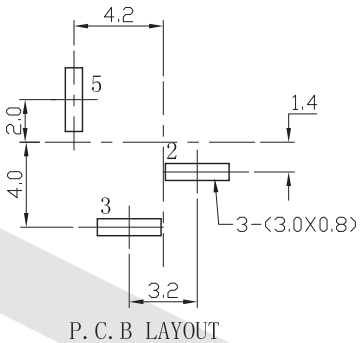

P. C. B LAYOUT

MODEL NO.	DC-022A
SCHEMATIC	5 2 3
CENTER PIN	ø 2.0mm
	ø 2.5mm

NO.	DESCRIPTION	QTY	MATERIAL	PLATING
6	COVER	1	PF	
5	CONTACT FOOT	1	BRASS	Sn-Plating
4	PIN	1	BRASS	Ni-Plating
3	SPRING	1	SUS301	Sn-Plating
2	FLAT PIECE	1	BRASS	Sn-Plating
1	HOUSING	1	PBT	

ORDER INFORMATION

Product NO.: KLS1-DC-022A-2.0

Pos. NO.
Center Pin Dimension
DC Jack Type

DC JACK Series

I

KLS1-DC-022B DIP DC Jack Type

Electrical Specification:

Rated Load : DC 30V 1A
Contact resistance : 30mΩ Max
Insulation resistance: 100MΩ Min
Withstand voltage : AC 500V(50Hz) 1min
Actuating Force: 3-20N
Life: 5000 cycles
Operating Temperature: -30°C~+70°C



Materials

Housing: PBT
Cover:PBT
Centre Pin: Copper, Nickel Plated
Terminal 5: Brass, Tin Plated
Terminal 3: Stainless Steel, Tin Plated
Terminal 2: Brass, Tin Plated

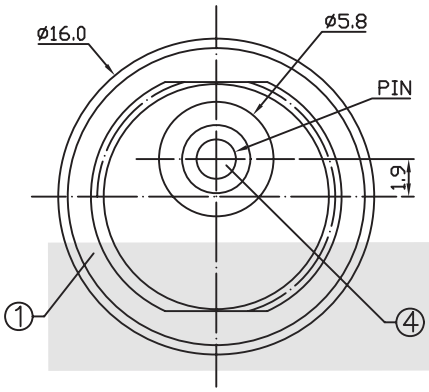

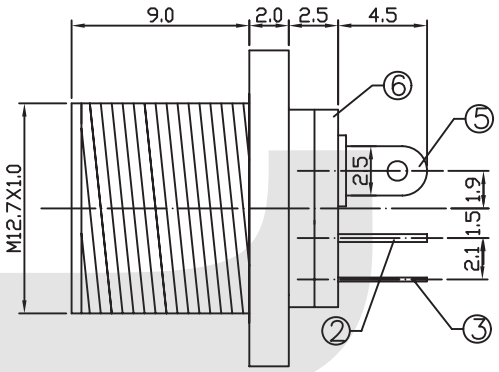

LTR	PART NAME	QTY	MATERIAL	REMARK
6	COVER	1	PF	
5	CONTACT FOOT	1	C2680	MB:Cu Cu/Sn PLATED
4	PIN	1	C2680	MB:Cu Ni PLATED
3	SPRING	1	65Mn STEEL	MB:Cu Cu/Sn PLATED
2	FLAT PIECE	1	C2680	MB:Cu Cu/Sn PLATED
1	HOUSING	1	PBT	

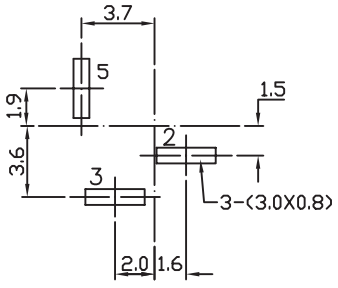

MODEL NO.	DC-022B
SCHEMATIC	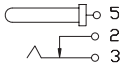
CENTER PIN	ø 2.0mm
	ø 2.5mm

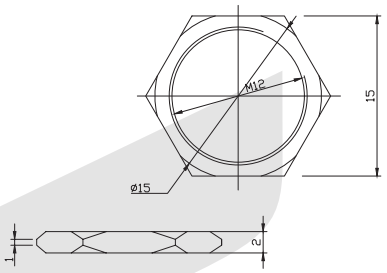

ORDER INFORMATION

Product NO.: KLS1-DC-022B-2.0

Pos. NO.
Center Pin Dimension
DC Jack Type

DC JACK Series

I

KLS1-DC-025A DIP DC Jack Type

Electrical Specification:

Rated Load : DC 30V 1A
Contact resistance : 30mΩ Max
Insulation resistance: 100MΩ Min
Withstand voltage : AC 500V(50Hz) 1min
Actuating Force: 3-20N
Life: 5000 cycles
Operating Temperature: -30°C~+70°C



Materials

Housing: PBT or PA66
Cover:PBT
Centre Pin: Copper, Nickel Plated
Terminal 1: Brass, Tin Plated
Terminal 3: Bronze, Tin Plated
Terminal 2: Brass, Tin Plated

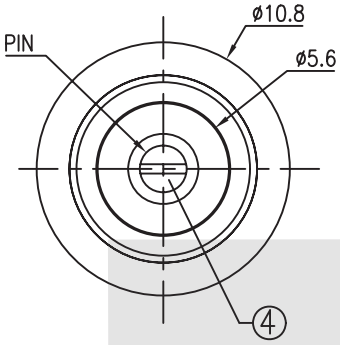

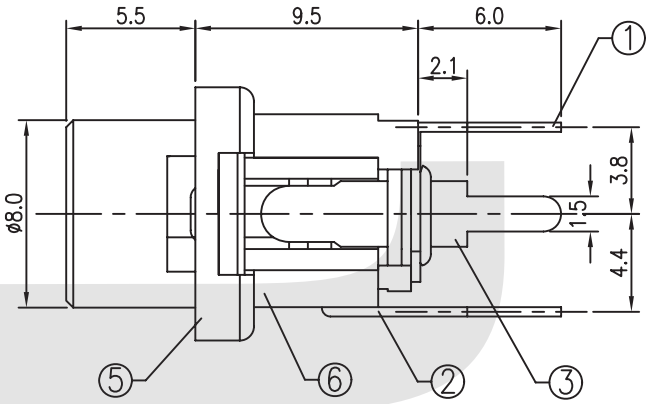

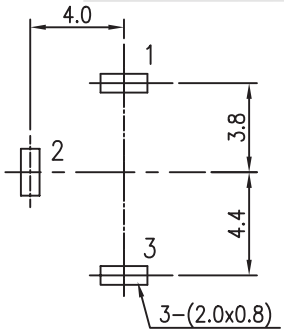

MODEL NO.	DC-025A
SCHEMATIC	1 2 3
CENTER PIN	ø 2.0mm ø 2.5mm

LTR	PART NAME	QTY	MATERIAL	REMARK
6	HOUSING	1	PA66	
5	AXIS SUPPORT	1	BRASS	MB:Cu Ni PLATED
4	PIN	1	H59 BRASS	MB:Cu Ni PLATED
3	SPRING	1	BRONZE	MB:Cu Cu/Sn PLATED
2	CURVE PIECE	1	H62 BRASS	MB:Cu Cu/Sn PLATED
1	FLAT PIECE	1	H62 BRASS	MB:Cu Cu/Sn PLATED

ORDER INFORMATION

Product NO.: KLS1-DC-025A-2.0

Pos. NO.
Center Pin Dimension
DC Jack Type

DC JACK Series

I

KLS1-DC-025B DC Jack Type



Electrical Specification:

Rated Load : DC 30V 1A
Contact resistance : 30mΩ Max
Insulation resistance: 100MΩ Min
Withstand voltage : AC 500V(50Hz) 1min
Actuating Force: 3-20N
Life: 5000 cycles
Operating Temperature: -30°C~+70°C

Materials

Housing: PBT or PA66
Cover:PBT
Centre Pin: Copper, Nickel Plated
Terminal 1: Brass, Tin Plated
Terminal 3: Bronze, Tin Plated
Terminal 2: Brass, Tin Plated

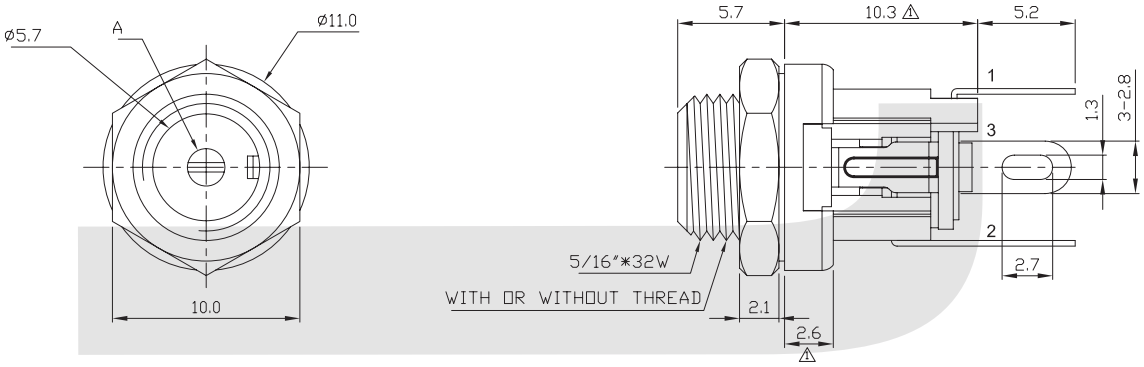

MODEL NO.	DC-025B
SCHEMATIC	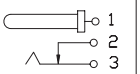
CENTER PIN	ø 2.0mm
	ø 2.5mm

NO	PART NAME	Q'TY	MATERIAL	PLATED	REMARK
9	WASHER	1	BRASS	NICKEL	
8	NUT	1	BRASS	NICKEL	
7	HOUSING	1	PA66		BLACK
6	LNSULATOR	2	PAPER SHEET		RED
5	PIN	1	COPPER	NICKEL	
4	BUSHING	1	BRASS	NICKEL	
3	PIN TERMINAL	1	BRASS	SILVER	
2	BREAK TERMINAL	1	BRASS	SILVER	
1	SLEEVE SPRING	1	P.B.S	SILVER	

ORDER INFORMATION

Product NO.: KLS1-DC-025B-2.0

Pos. NO.
Center Pin Dimension
DC Jack Type

DC JACK Series

I

KLS1-TDC-001A SMT DC Jack Type



Electrical Specification:

Rated Load : DC 30V 1A
Contact resistance : 30mΩ Max
Insulation resistance: 100MΩ Min
Withstand voltage : AC 500V(50Hz) 1min
Actuating Force: 3-20N
Life: 5000 cycles
Operating Temperature: -30°C~+70°C

Materials

Housing: PA6T
Cover:PA6T
Centre Pin: Copper, Nickel Plated
Terminal 1: Brass, Tin Plated
Terminal 3: Bronze, Tin Plated
Terminal 2: Brass, Tin Plated

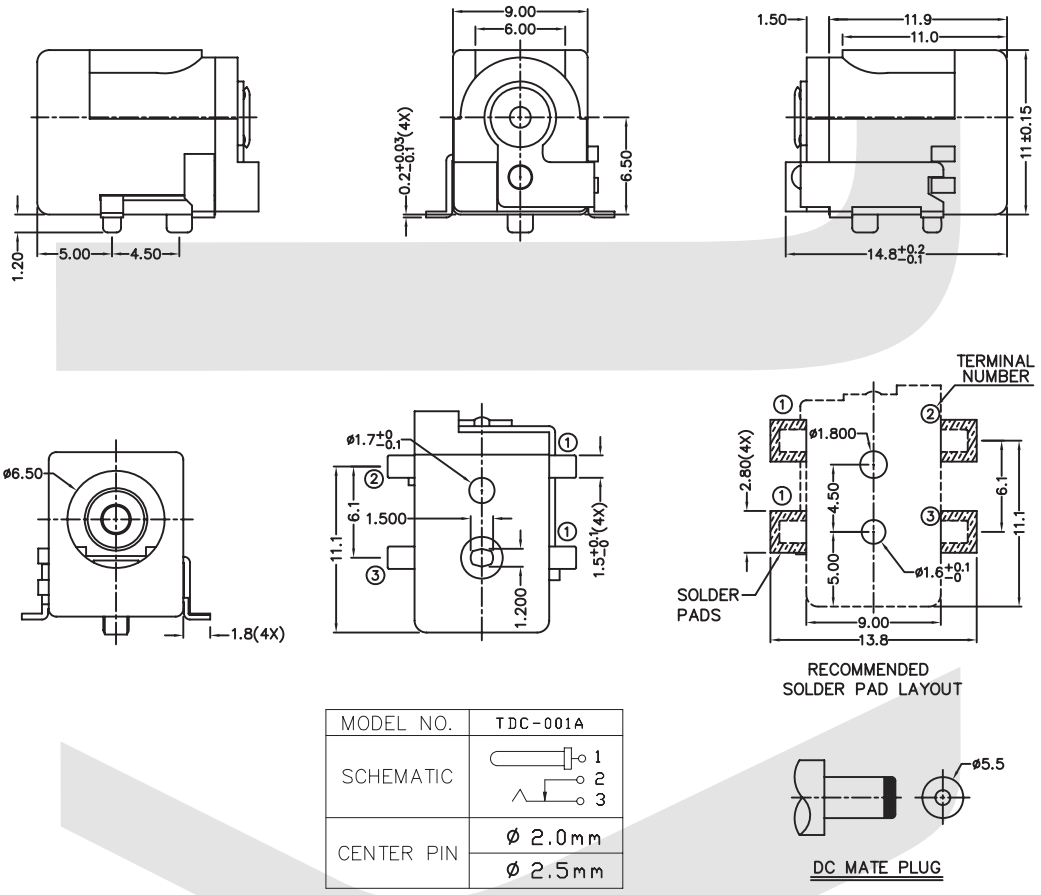

ORDER INFORMATION

Product NO.: KLS1-TDC-001A-2.0

Pos. NO.
Center Pin Dimension
DC Jack Type

DC JACK Series

I

KLS1-TDC-002A SMT DC Jack Type



Electrical Specification:

Rated Load : DC 30V 1A
Contact resistance : 30mΩ Max
Insulation resistance: 100MΩ Min
Withstand voltage : AC 500V(50Hz) 1min
Actuating Force: 3-20N
Life: 5000 cycles
Operating Temperature: -30°C~+70°C

Materials

Housing: PA6T
Cover:PA6T
Centre Pin: Copper, Nickel Plated
Terminal 1: Brass, Tin Plated
Terminal 3: Copper Alloy, Tin Plated
Terminal 2: Brass, Tin Plated

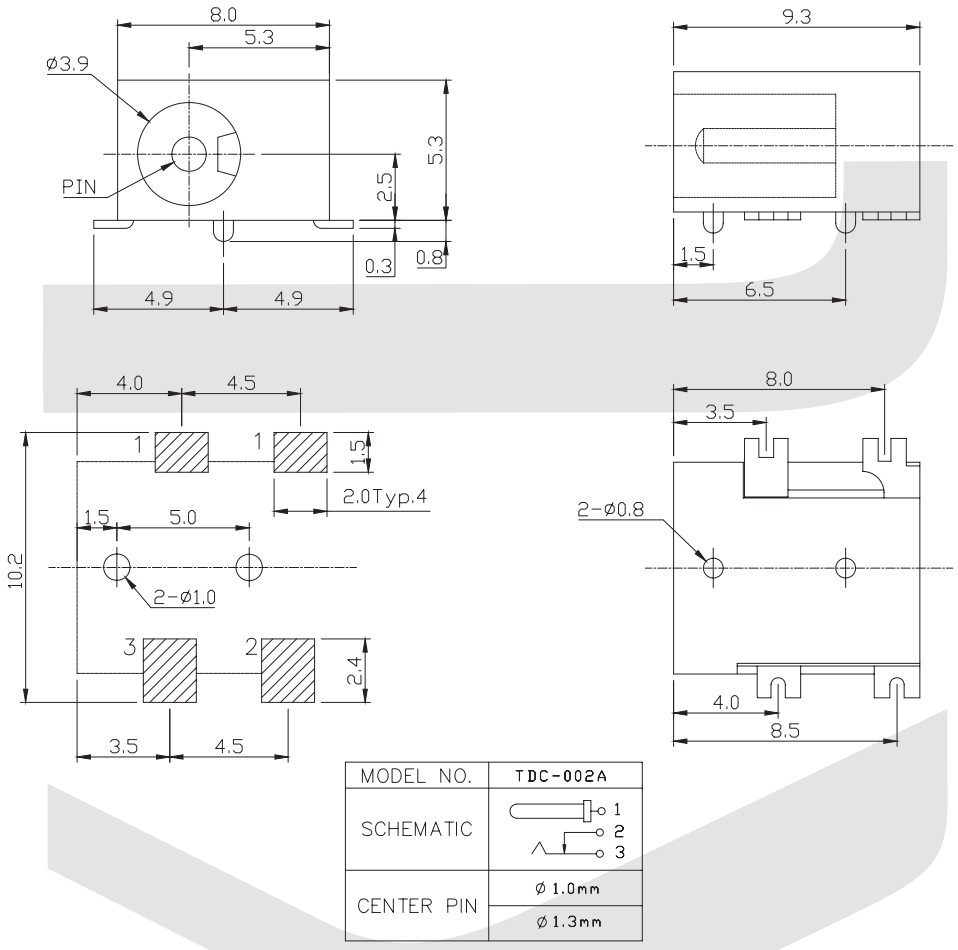

MODEL NO.	TDC-002A
SCHEMATIC	1 2 3
CENTER PIN	ø 1.0mm
	ø 1.3mm

ORDER INFORMATION

Product NO.: KLS1-TDC-002A-1.0

- KLS1 — Pos. NO.
- TDC-002A — DC Jack Type
- 1.0 — Center Pin Dimension

DC JACK Series

KLS1-TDC-003A SMT DC Jack Type



Electrical Specification:

Rated Load : DC 30V 1A
Contact resistance : 30mΩ Max
Insulation resistance: 100MΩ Min
Withstand voltage : AC 500V(50Hz) 1min
Actuating Force: 3-20N
Life: 5000 cycles
Operating Temperature: -30°C~+70°C

Materials

Housing: PA6T
Cover:PA6T
Centre Pin: Copper, Nickel Plated
Terminal 1: Bronze, Tin Plated
Terminal 2:Stainless Steel, Tin Plated
Terminal 3: Brass, Tin Plated
Terminal 4: Brass, Tin Plated
Terminal 5: Bronze, Tin Plated



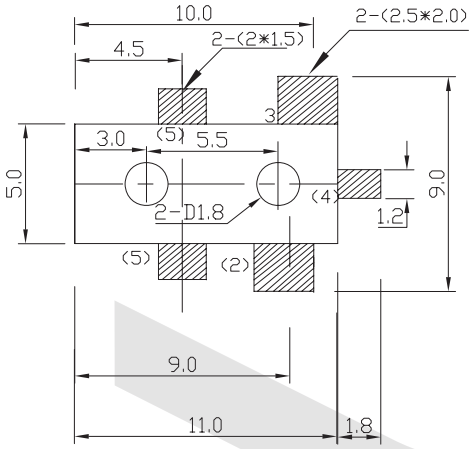

MODEL NO.	TDC-003A
SCHEMATIC	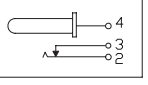

ORDER INFORMATION

Product NO.: KLS1-TDC-003A

Pos. NO.
DC Jack Type

DC Power Socket / DC Plug Series

KLS1-TDC-004A (DC Power Socket)

Housing Material/Center Pin Material	PA6T / Brass
Rated Load	DC 16V 2.5A Max
Contact resistance	≤0.03Ω
Insulation resistance	≥100MΩ
Withstand voltage	AC 500V(50Hz) 1min
Actuating Force	3~20N
Life	5000Time

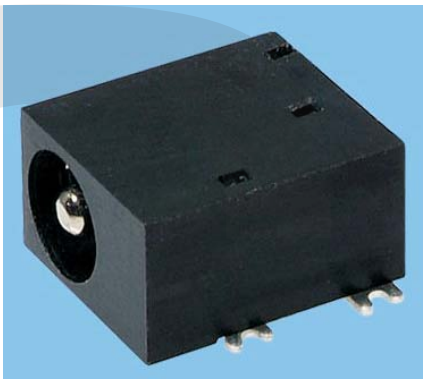

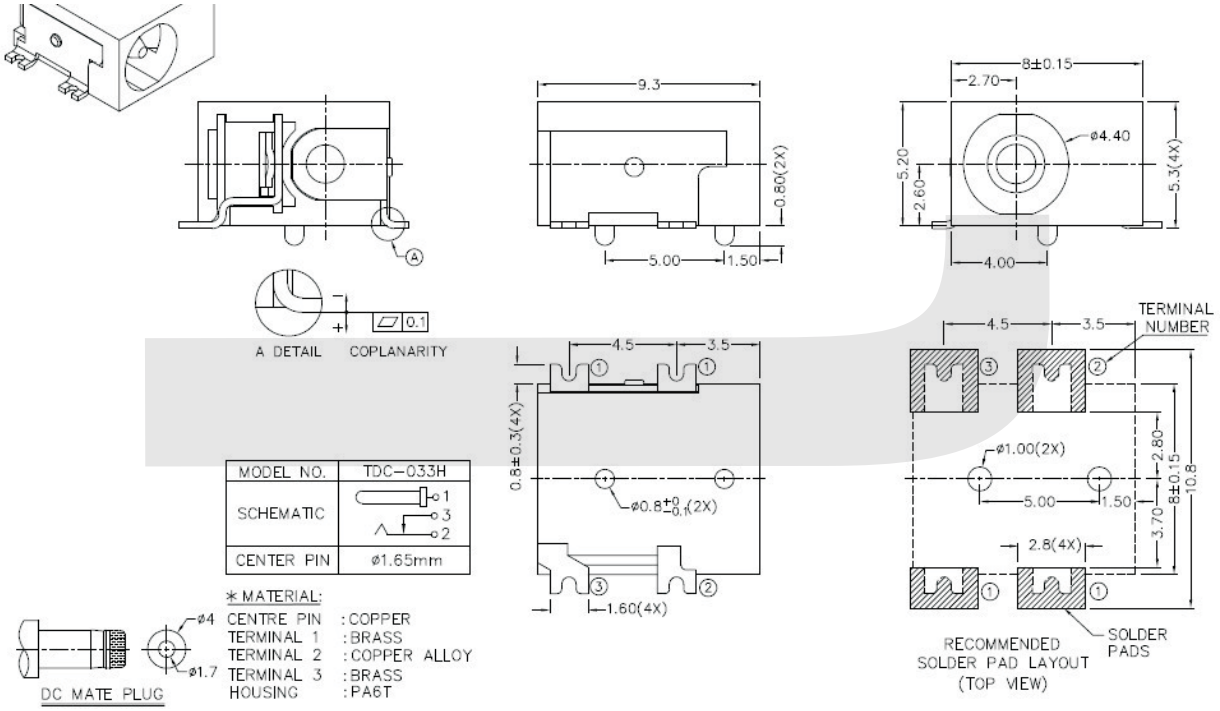

ORDER INFORMATION

Product NO. : KLS1-TDC-004A

Pos. NO. ——┐

I

DC Power Socket / DC Plug Series

KLS1-TDC-005A (DC Power Socket)

Housing Material/Center Pin Material	PA6T / Brass
Rated Load	DC 16V 2.5A Max
Contact resistance	≤0.03Ω
Insulation resistance	≥100MΩ
Withstand voltage	AC 500V(50Hz) 1min
Actuating Force	3~20N
Life	5000Time



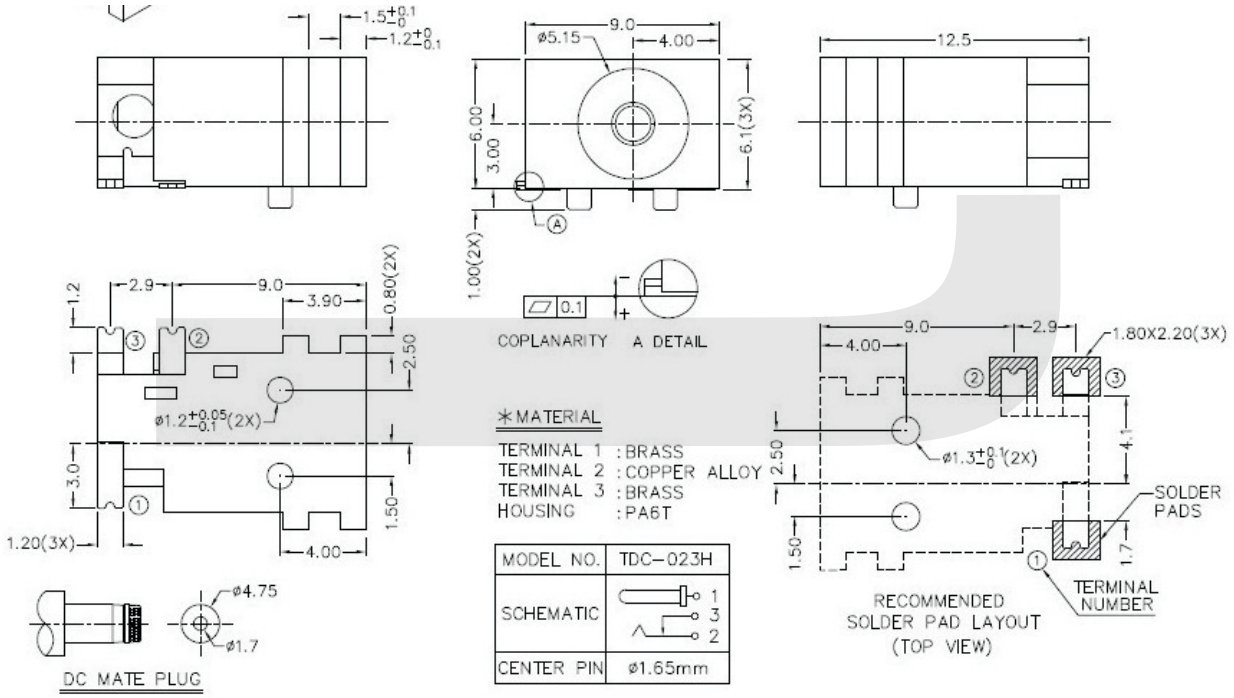

ORDER INFORMATION

Product NO. : KLS1-TDC-005A

Pos. NO. ——

DC Power Socket / DC Plug Series

KLS1-TDC-006A (DC Power Socket)

Housing Material/Center Pin Material	PA6T / Brass
Rated Load	DC 16V 2.5A Max
Contact resistance	≤0.03Ω
Insulation resistance	≥100MΩ
Withstand voltage	AC 500V(50Hz) 1min
Actuating Force	3~20N
Life	5000Time

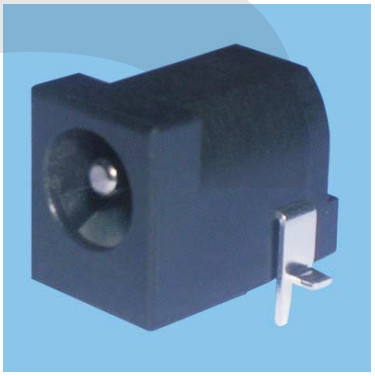

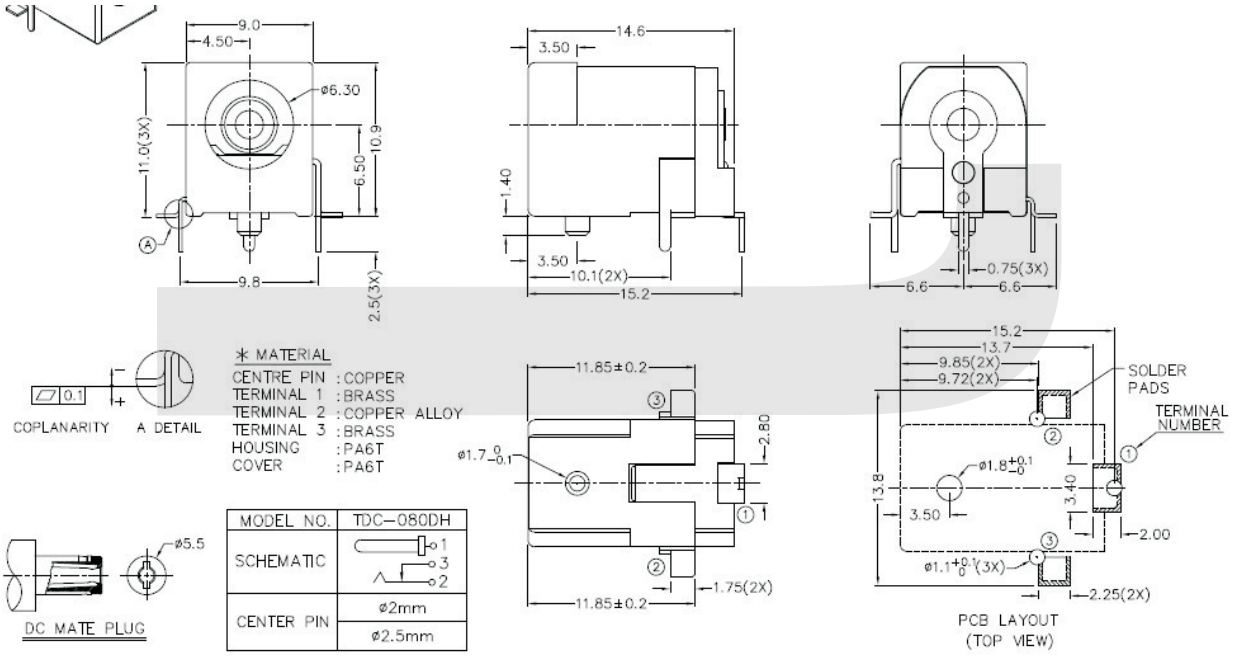

ORDER INFORMATION

Product NO. : KLS1-TDC-006A

Pos. NO. ——┐

DC Power Socket / DC Plug Series

KLS1-TDC-007A (DC Power Socket)

Housing Material/Center Pin Material	PA6T / Brass
Rated Load	DC 16V 2.5A Max
Contact resistance	≤0.03Ω
Insulation resistance	≥100MΩ
Withstand voltage	AC 500V(50Hz) 1min
Actuating Force	3~20N
Life	5000Time

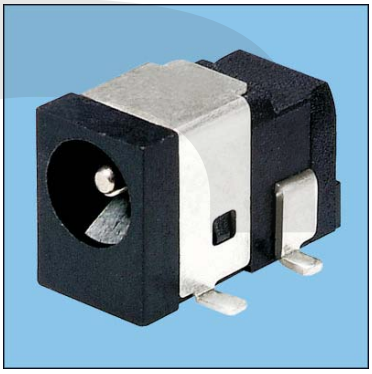

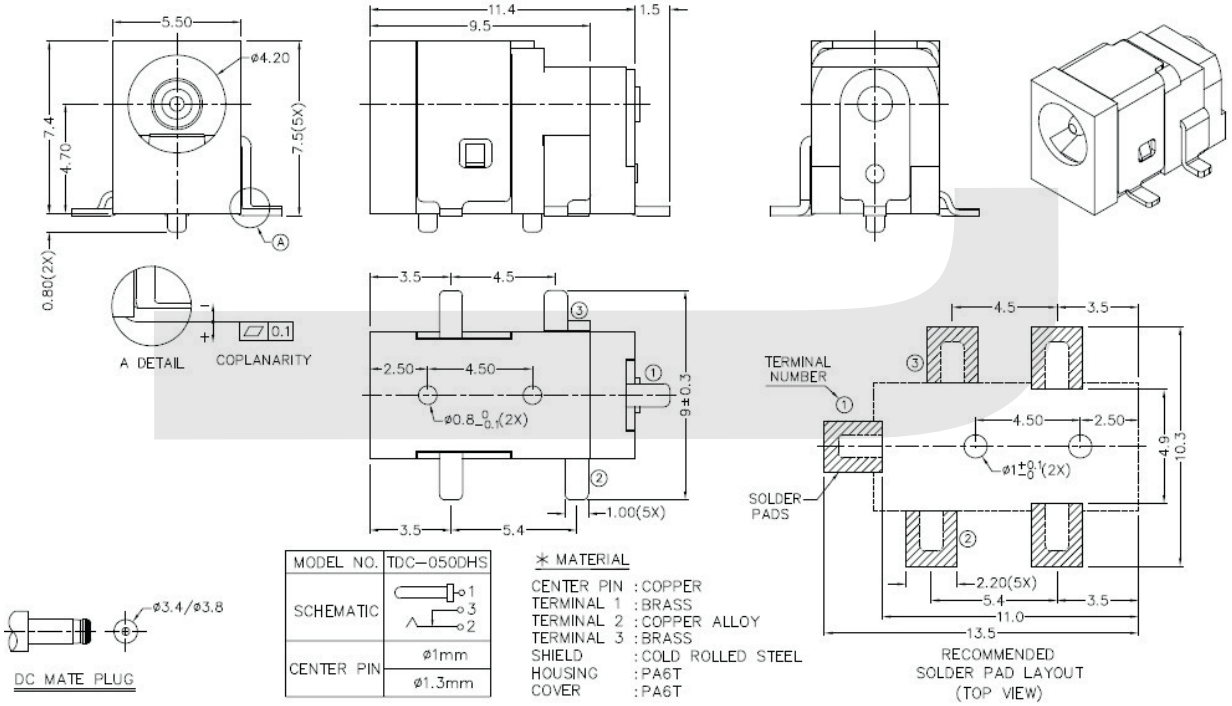

ORDER INFORMATION

Product NO. : KLS1-TDC-007A

Pos. NO. ——┐

DC Power Socket / DC Plug Series

KLS1-TDC-008A (DC Power Socket)

Housing Material/Center Pin Material	PA6T / Brass
Rated Load	DC 16V 2.5A Max
Contact resistance	≤0.03Ω
Insulation resistance	≥100MΩ
Withstand voltage	AC 500V(50Hz) 1min
Actuating Force	3~20N
Life	5000Time



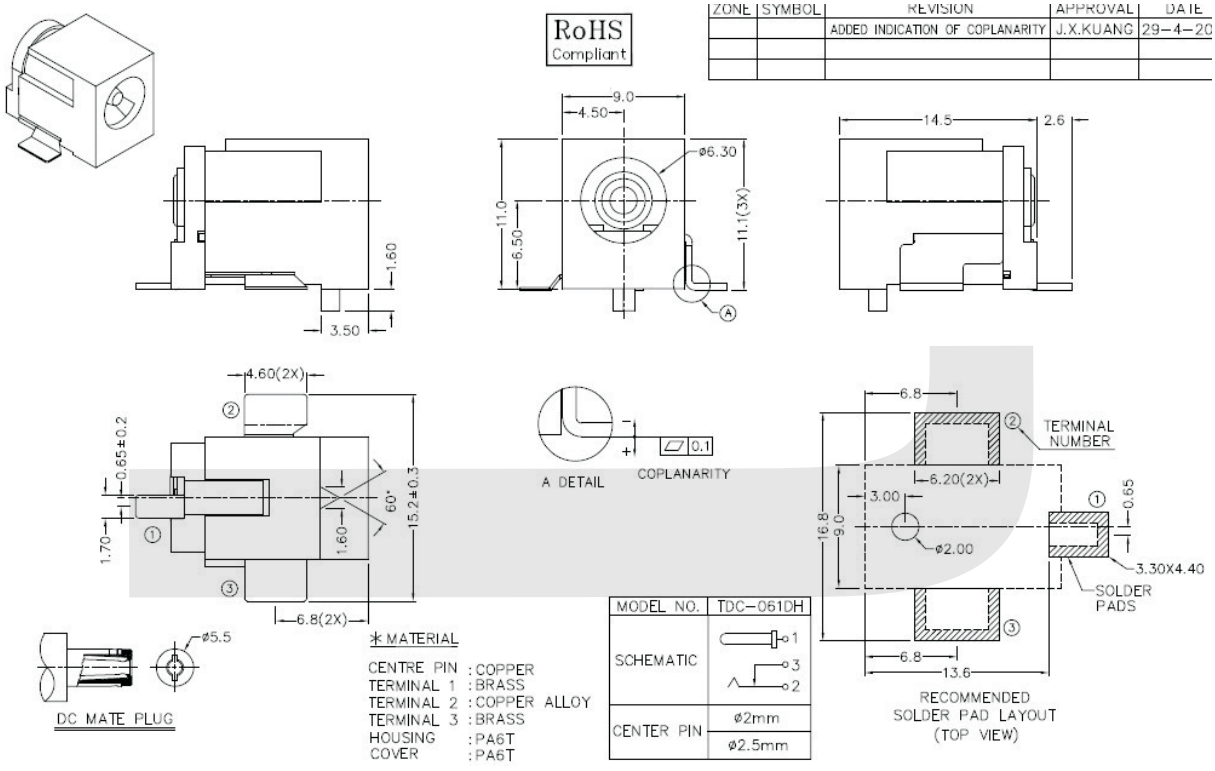

KLS1-TDC-008B



ORDER INFORMATION

Product NO. : KLS1-TDC-008A

Pos. NO. ——┐

DC Power Socket / DC Plug Series

KLS1-TDC-009A (DC Power Socket)

Housing Material/Center Pin Material	PA6T / Brass
Rated Load	DC 16V 2.5A Max
Contact resistance	≤0.03Ω
Insulation resistance	≥100MΩ
Withstand voltage	AC 500V(50Hz) 1min
Actuating Force	3~20N
Life	5000Time



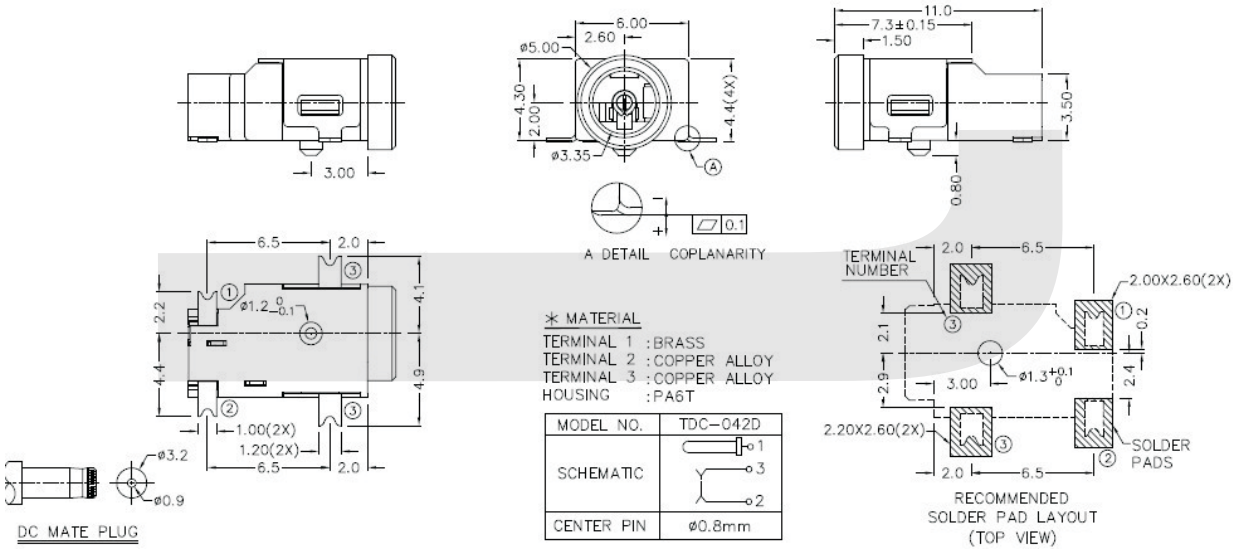

ORDER INFORMATION

Product NO. : KLS1-TDC-009A

Pos. NO.

DC Power Socket / DC Plug Series

KLS1-TDC-010A (DC Power Socket)

Housing Material/Center Pin Material	PA6T / Brass
Rated Load	DC 16V 2.5A Max
Contact resistance	≤0.03Ω
Insulation resistance	≥100MΩ
Withstand voltage	AC 500V(50Hz) 1min
Actuating Force	3~20N
Life	5000Time

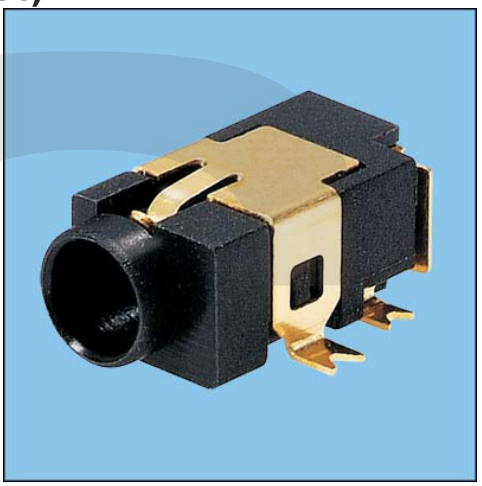

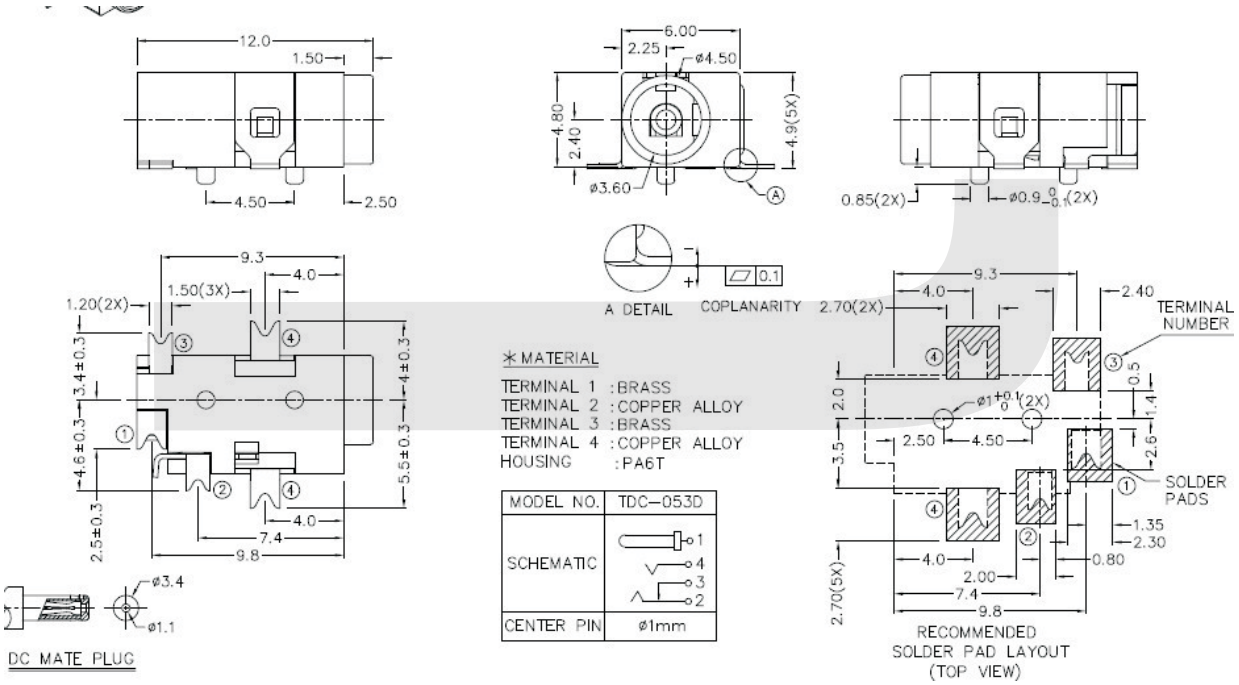

✳MATERIAL

TERMINAL 1 :BRASS
TERMINAL 2 :COPPER ALLOY
TERMINAL 3 :BRASS
TERMINAL 4 :COPPER ALLOY
HOUSING :PA6T

MODEL NO.	TDC-053D
SCHEMATIC	
CENTER PIN	ø1mm

ORDER INFORMATION

Product NO. : KLS1-TDC-010A

Pos. NO.

DC Power Socket / DC Plug Series

KLS1-TDC-011A (DC Power Socket)

Housing Material/Center Pin Material	PA6T / Brass
Rated Load	DC 16V 2.5A Max
Contact resistance	≤0.03Ω
Insulation resistance	≥100MΩ
Withstand voltage	AC 500V(50Hz) 1min
Actuating Force	3~20N
Life	5000Time



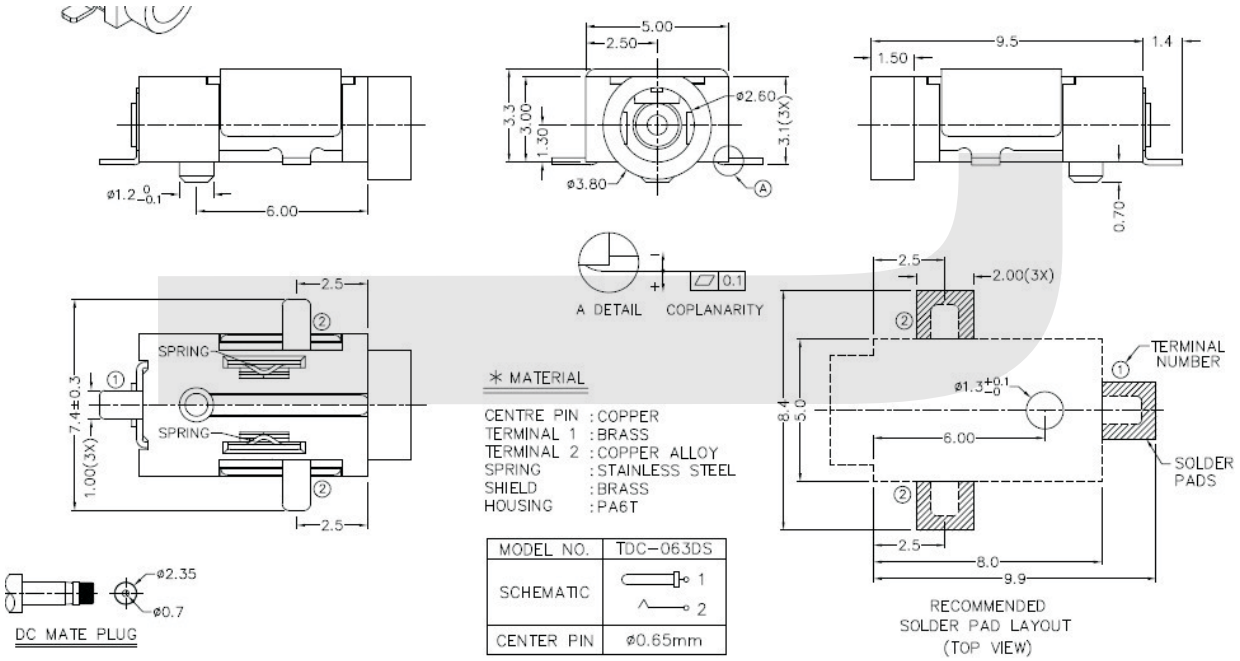

* MATERIAL

CENTRE PIN : COPPER
TERMINAL 1 : BRASS
TERMINAL 2 : COPPER ALLOY
SPRING : STAINLESS STEEL
SHIELD : BRASS
HOUSING : PA6T

MODEL NO.	TDC-063DS
SCHEMATIC	1 / 2
CENTER PIN	ø0.65mm

ORDER INFORMATION

Product NO. : KLS1-TDC-011A

Pos. NO. ——

AC INLET Series

KLS1-AS-111-01 C6 AC INLET Series

SPECIFICATION:

Standard: IEC 60320 C6
Voltage rating: 250V AC
Rating: 2.5A 250V AC
Insulation Resistance: 100MΩ 500V DC/1 minute
Dielectric Strength: 2000V AC/1 minute
Temperature range: -45°C ~ +105°C



Material:

Housing Material: PBT UL 94V-0 or PA66/PC UL 94V-0
Terminal: Brass ,plating Ni.



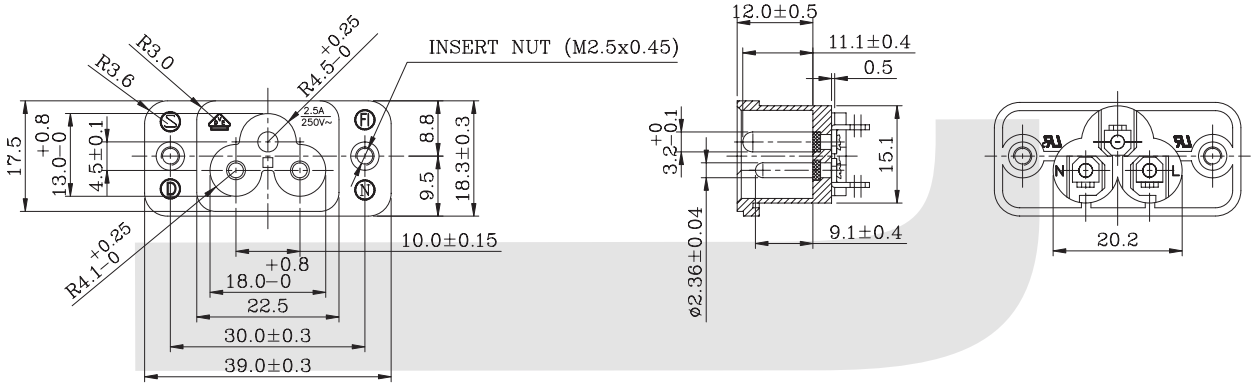

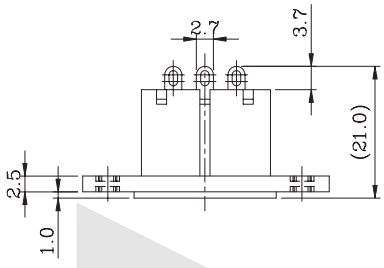

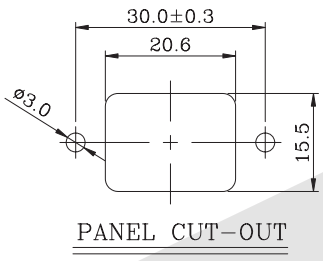

ORDER INFORMATION

Product NO.: KLS1-AS-111-01

Pos. NO.
AC Inlet Type

AC INLET Series

KLS1-AS-111-02 C6 AC INLET Series

SPECIFICATION:

Standard:	IEC 60320 C6
Voltage rating:	250V AC
Rating:	2.5A 250V AC
Insulation Resistance:	100MΩ 500V DC/1 minute
Dielectric Strength:	2000V AC/1 minute
Temperature range:	-45°C ~ +105°C



Material:

Housing Material: PBT UL 94V-0 or PA66/PC UL 94V-0
Terminal: Brass ,plating Ni.



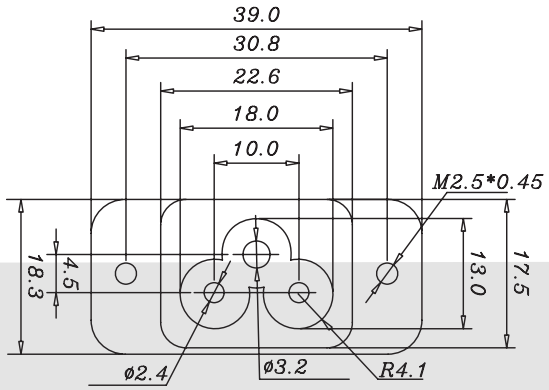

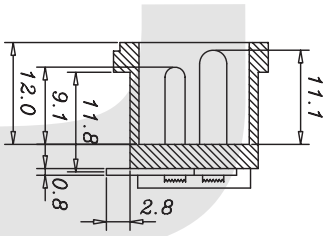

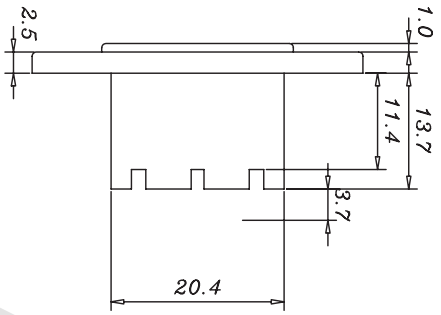

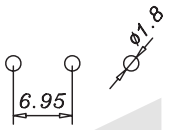

ORDER INFORMATION

Product NO.: KLS1-AS-111-02

Pos. NO.

AC Inlet Type

AC INLET Series

KLS1-AS-111-03 C6 AC INLET Series

SPECIFICATION:

Standard:	IEC 60320 C6
Voltage rating:	250V AC
Rating:	2.5A 250V AC
Insulation Resistance:	100MΩ 500V DC/1 minute
Dielectric Strength:	2000V AC/1 minute
Temperature range:	-45°C ~ +105°C

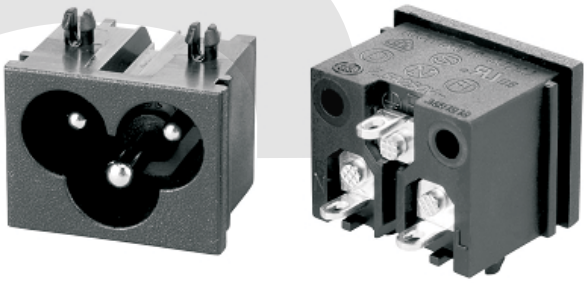

Material:

Housing Material: PBT UL 94V-0 or PA66/PC UL 94V-0
Terminal: Brass ,plating Ni.



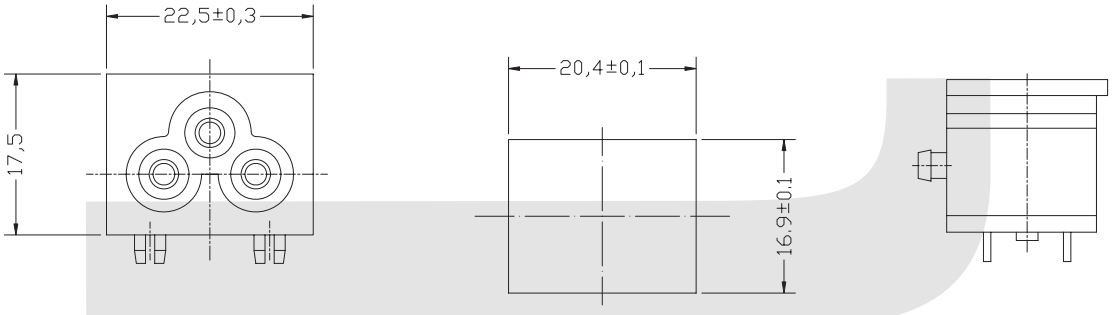

PANEL CUT-OUT

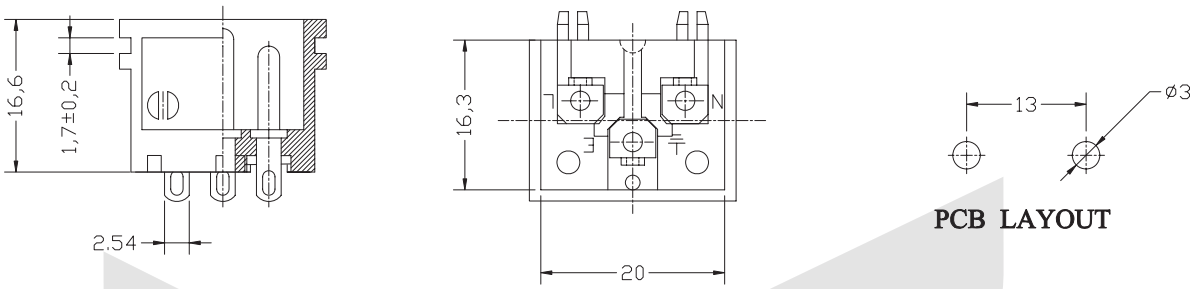

PCB LAYOUT

ORDER INFORMATION

Product NO.: KLS1-AS-111-03

Pos. NO.

AC Inlet Type

AC INLET Series

KLS1-AS-111-04 C6 AC INLET Series

SPECIFICATION:

Standard:	IEC 60320 C6
Voltage rating:	250V AC
Rating:	2.5A 250V AC
Insulation Resistance:	100MΩ 500V DC/1 minute
Dielectric Strength:	2000V AC/1 minute
Temperature range:	-45°C ~ +105°C

Material:

Housing Material: PBT UL 94V-0 or PA66/PC UL 94V-0
Terminal: Brass ,plating Ni.



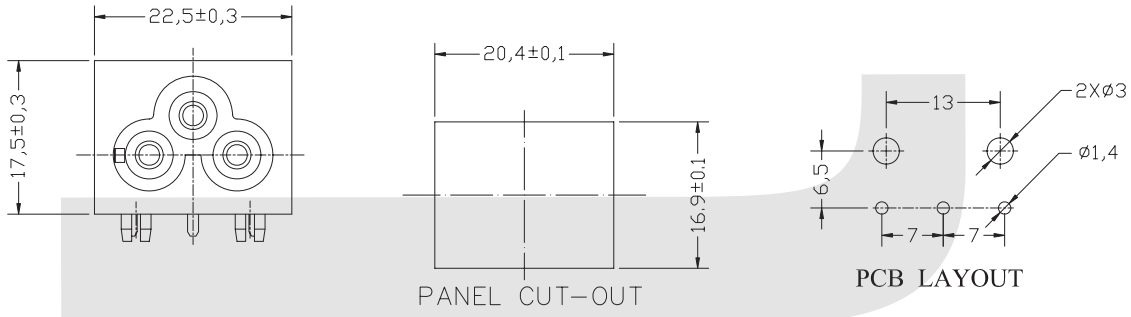

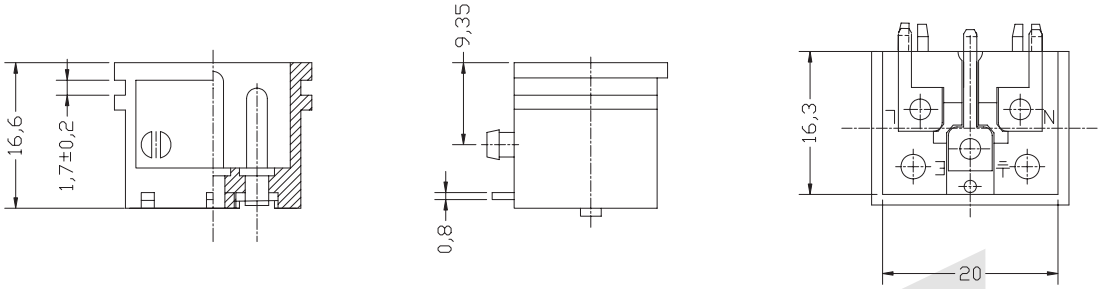

ORDER INFORMATION

Product NO.: KLS1-AS-111-04

Pos. NO.

AC Inlet Type

AC INLET Series

KLS1-AS-222-1 C8 AC INLET Series

SPECIFICATION:

Standard: IEC 60320 C8
Voltage rating: 250V AC
Rating: 250VAC 10A (2.5A)
InsulationResistance: 100MΩ 500V DC / 1 minute
Dielectric Strength: 2000V AC / 1 minute
Temperature range: -45°C ~ +105°C



Material:

Housing Material: PBT UL 94V-0 or PA66/PC UL 94V-0
Terminal: Brass ,plating Ni.



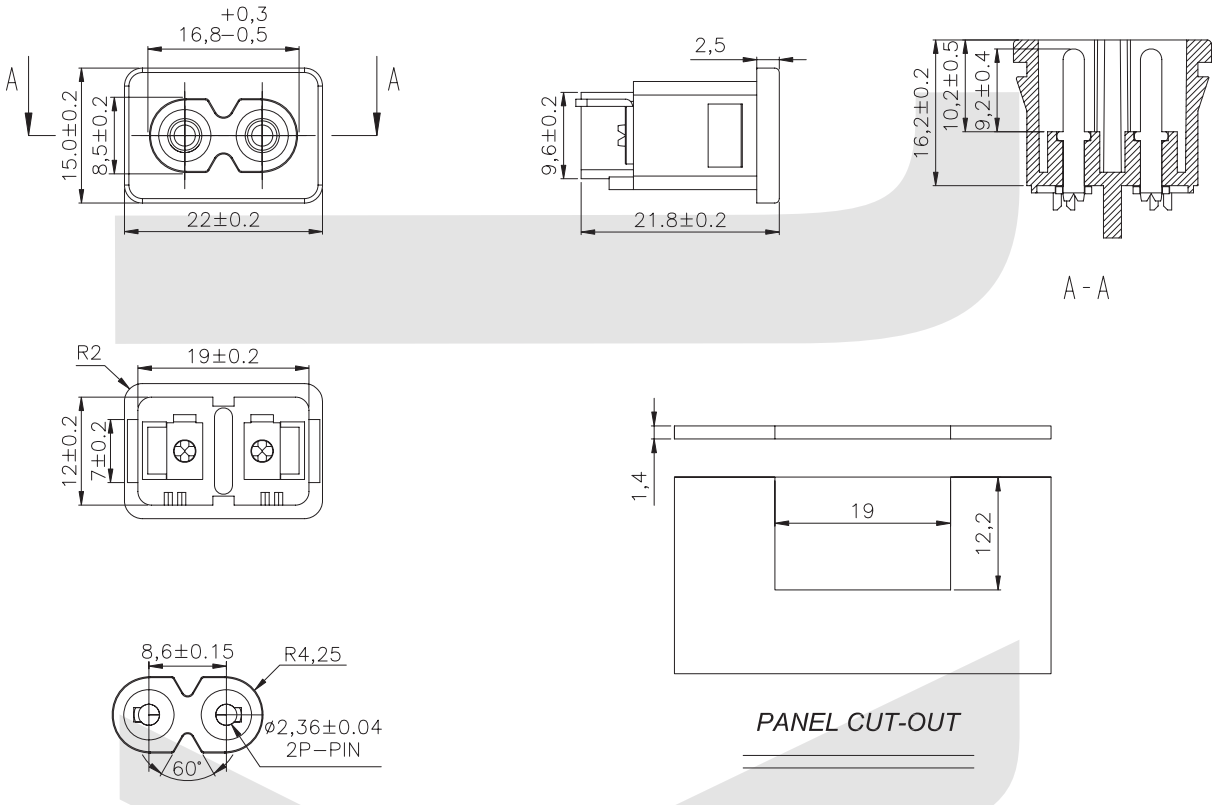

ORDER INFORMATION

Product NO.: KLS1-AS-222-1

Pos. NO.

AC Inlet Type

I

AC INLET Series

KLS1-AS-222-5 C8 AC INLET Series

SPECIFICATION:

Standard: IEC 60320 C8
Voltage rating: 250V AC
Rating: 250VAC 10A (2.5A)
InsulationResistance: 100MΩ 500V DC / 1 minute
Dielectric Strength: 2000V AC / 1 minute
Temperature range: -45°C ~ +105°C



Material:

Housing Material: PBT UL 94V-0 or PA66/PC UL 94V-0
Terminal: Brass ,plating Ni.



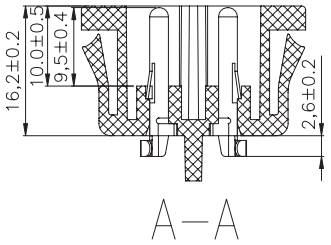

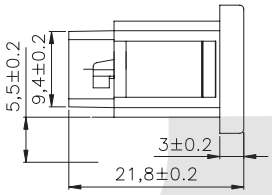

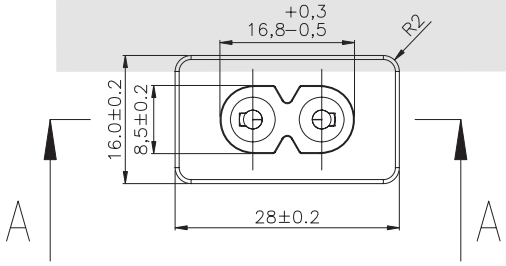

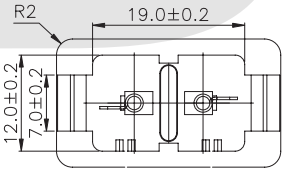

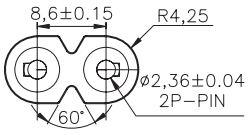

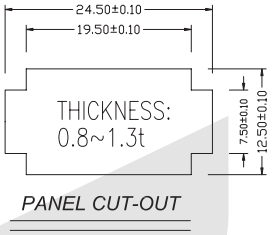

ORDER INFORMATION

Product NO.: KLS1-AS-222-5

Pos. NO.

AC Inlet Type

I

AC INLET Series

KLS1-AS-222-6 C8 AC INLET Series

SPECIFICATION:

Standard: IEC 60320 C8
Voltage rating: 250V AC
Rating: 250VAC 10A (2.5A)
InsulationResistance: 100MΩ 500V DC / 1 minute
Dielectric Strength: 2000V AC / 1 minute
Temperature range: -45°C ~ +105°C

Material:

Housing Material: PBT UL 94V-0 or PA66/PC UL 94V-0
Terminal: Brass ,plating Ni.

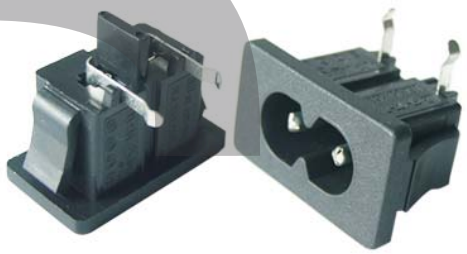

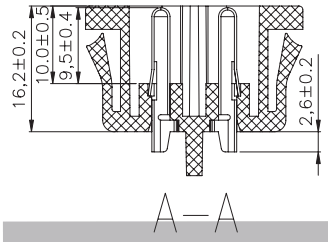

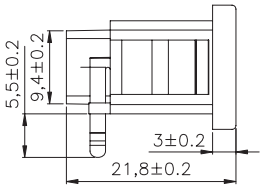

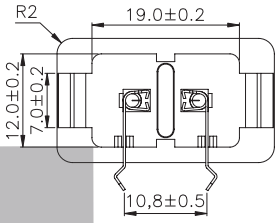

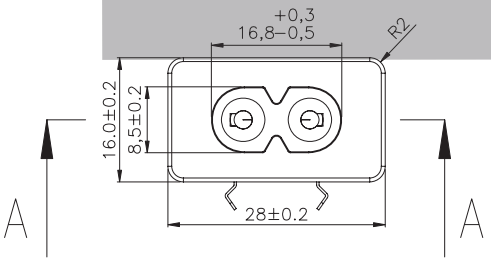

THICKNESS:
0.8~1.3t

PANEL CUT-OUT

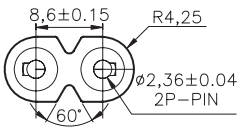

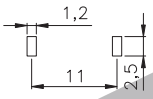

PCB. LAYOUT

ORDER INFORMATION

Product NO.: KLS1-AS-222-6

Pos. NO.

AC Inlet Type

AC INLET Series

KLS1-AS-222-11 C8 AC INLET Series

SPECIFICATION:

Standard: IEC 60320 C8
Voltage rating: 250V AC
Rating: 250VAC 10A (2.5A)
InsulationResistance: 100MΩ 500V DC / 1 minute
Dielectric Strength: 2000V AC / 1 minute
Temperature range: -45°C ~ +105°C



Material:

Housing Material: PBT UL 94V-0 or PA66/PC UL 94V-0
Terminal: Brass ,plating Ni.



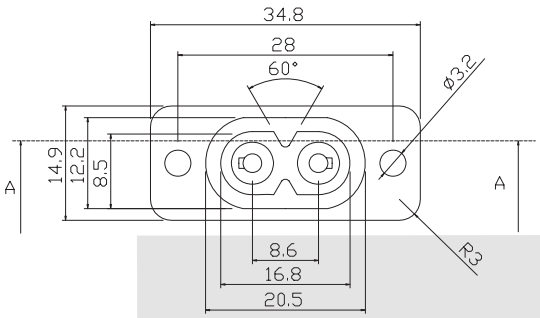

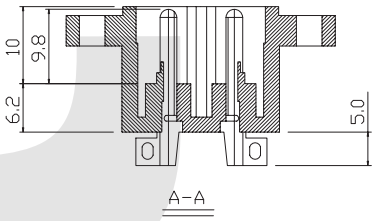

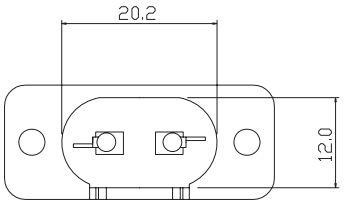

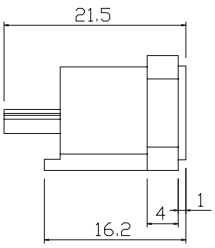

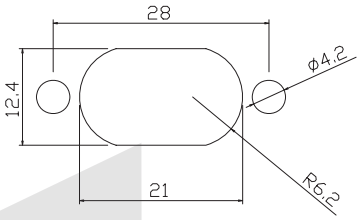

PANEL CUT-OUT

ORDER INFORMATION

Product NO.: KLS1-AS-222-11

Pos. NO.

AC Inlet Type

AC INLET Series

KLS1-AS-222-12 C8 AC INLET Series

SPECIFICATION:

Standard: IEC 60320 C8
Voltage rating: 250V AC
Rating: 250VAC 10A (2.5A)
InsulationResistance: 100MΩ 500V DC / 1 minute
Dielectric Strength: 2000V AC / 1 minute
Temperature range: -45°C ~ +105°C



Material:

Housing Material: PBT UL 94V-0 or PA66/PC UL 94V-0
Terminal: Brass ,plating Ni.



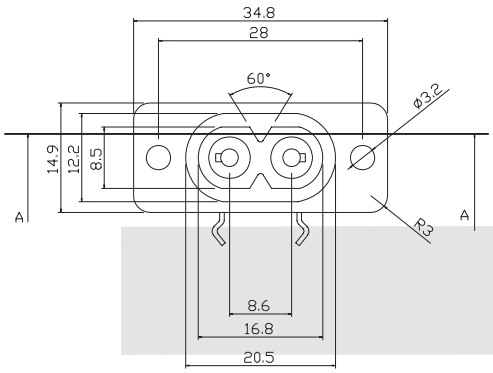

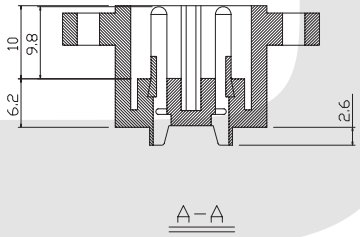

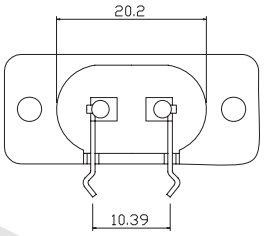

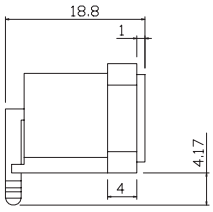

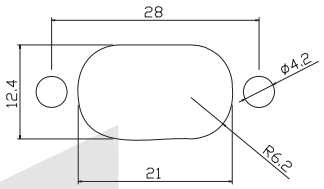

PANEL CUT-OUT

ORDER INFORMATION

Product NO.: KLS1-AS-222-12

Pos. NO.
AC Inlet Type

AC INLET Series

KLS1-AS-222-15 C8 AC INLET Series

SPECIFICATION:

Dielectric strength:	AC3000v-60sec. Between poles
Insulation resistance:	Between poles by Dc500v min 1000m
Contact resistance:	Attached to power connector max 50m at 10A
Heat resistance:	100 ± 5 for 1Hr
Forming strength of Contact and body:	Static load of 10 pounds/60sec
Strength of screw mounting:	Rotational torque of 8kg/cm. 5sec
Impact test:	0.5kg 1 times according to UI1950
Rating:	250VAC 10A (2.5A)



Material:

Insulator: PBT UL 94V-0 or PA66/PC UL 94V-0
Terminal: Brass ,plating Ni.

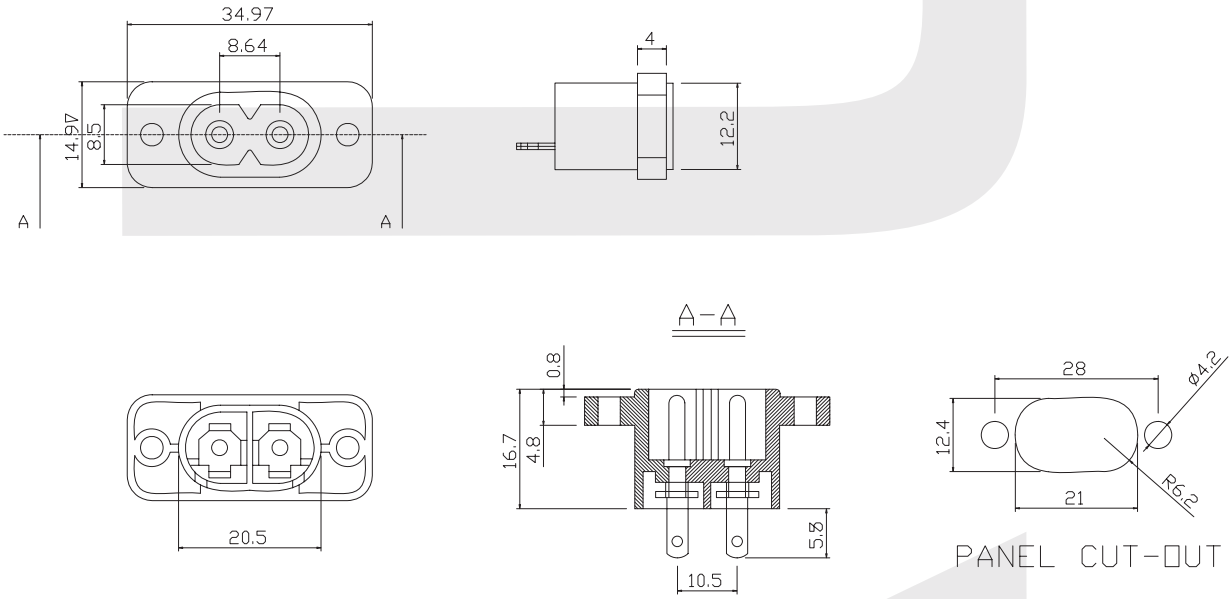

ORDER INFORMATION

Product NO.: KLS1-AS-222-15

Pos. NO.

AC Inlet Type

AC INLET Series

KLS1-AS-222-16 C8 AC INLET Series

SPECIFICATION:

Standard:	IEC 60320 C8
Voltage rating:	250V AC
Rating:	2.5A 250V AC
Insulation Resistance:	100MΩ 500V DC/1 minute
Dielectric Strength:	2000V AC/1 minute
Temperature range:	-45°C ~ +105°C



Material:

Housing Material: PBT UL 94V-0 or PA66/PC UL 94V-0
Terminal: Brass ,plating Ni.



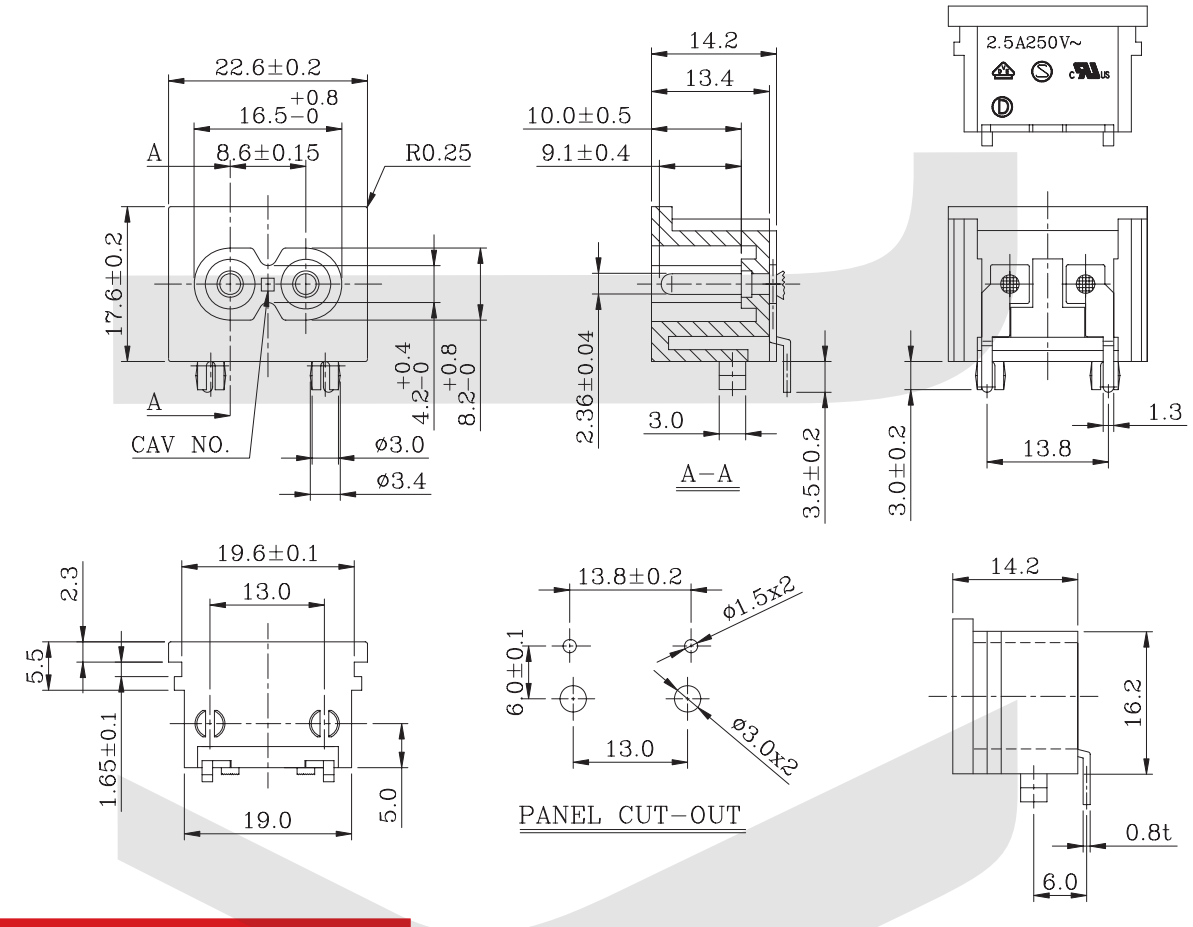

ORDER INFORMATION

Product NO.: KLS1-AS-222-16

Pos. NO.

AC Inlet Type

I

AC INLET Series

KLS1-AS-222-17 C8 AC INLET Series

SPECIFICATION:

Standard:	IEC 60320 C8
Voltage rating:	250V AC
Rating:	2.5A 250V AC
Insulation Resistance:	100MΩ 500V DC/1 minute
Dielectric Strength:	2000V AC/1 minute
Temperature range:	-45°C ~ +105°C



Material:

Housing Material: PBT UL 94V-0 or PA66/PC UL 94V-0
Terminal: Brass ,plating Ni.



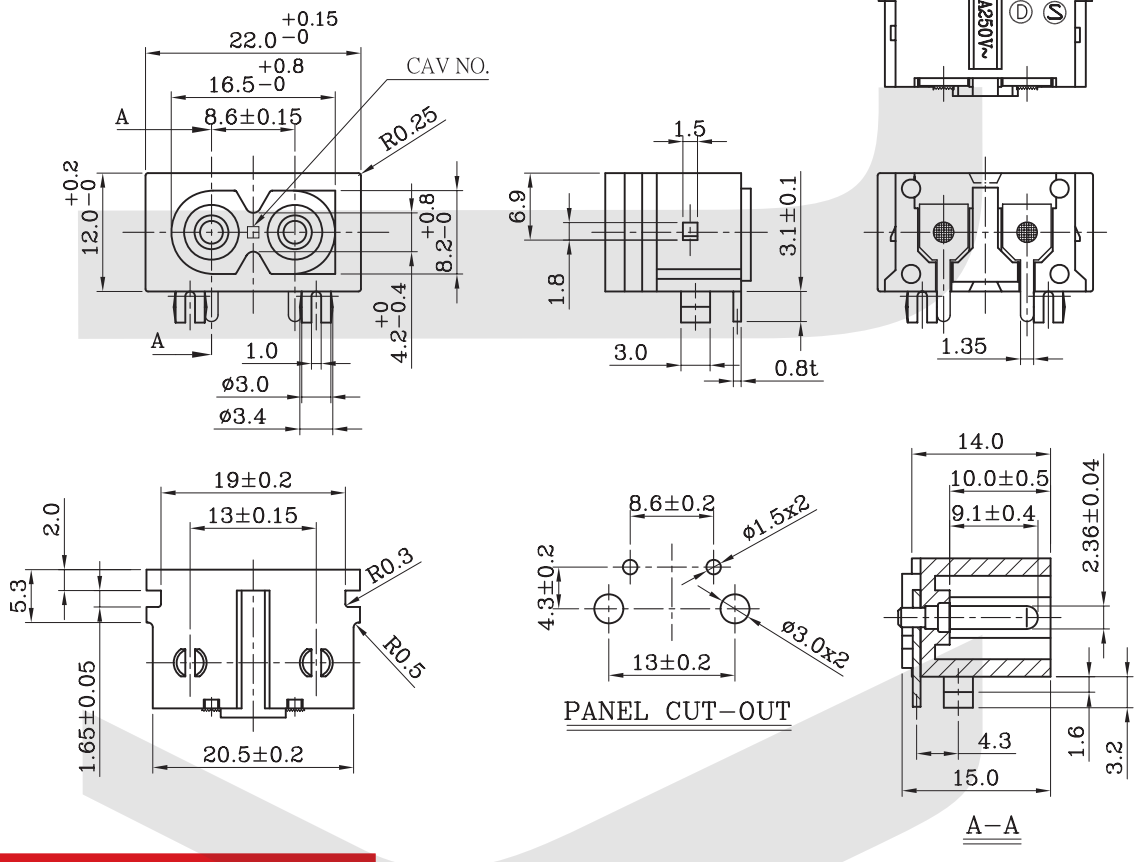

ORDER INFORMATION

Product NO.: KLS1-AS-222-17

Pos. NO.

AC Inlet Type

AC INLET Series

KLS1-AS-301 IEC AC INLET Series

SPECIFICATION:

Standard: IEC 60320 C8
Voltage rating: 250V AC
Rating: 250VAC 10A (2.5A)
InsulationResistance: 100MΩ 500V DC / 1 minute
Dielectric Strength: 2000V AC / 1 minute
Temperature range: -45°C ~ +105°C



Material:

Housing Material: PBT UL 94V-0 or PA66/PC UL 94V-0
Terminal: Brass ,plating Ni.



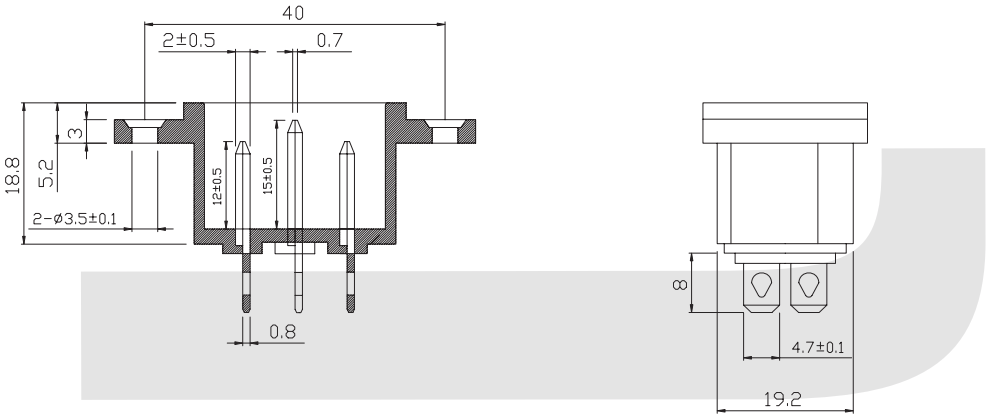

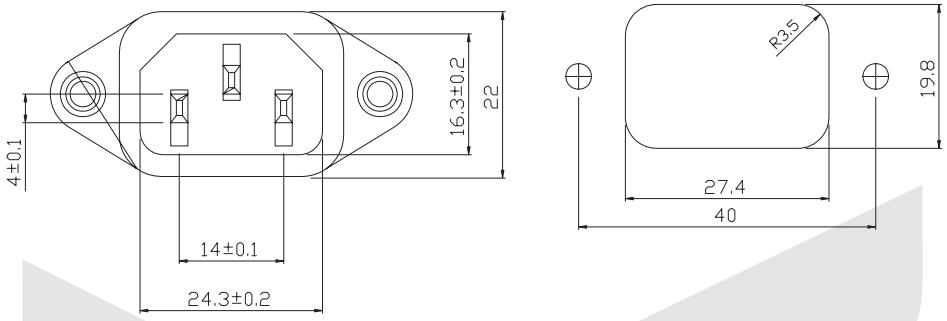

ORDER INFORMATION

Product NO.: KLS1-AS-301

Pos. NO.
AC Inlet Type

AC INLET Series

KLS1-AS-301-2 IEC AC INLET Series

SPECIFICATION:

Current Rating: 250V AC 10A
Contact Resistance: 30mΩ Max.
Insulator Resistance: 100MΩ Min. at DC 500V
Dielectric withstand Strength test: 2000VAC / 1 minute
between each terminals
Insertion and Removal force: 5 ~ 40N
Operating Temperature: -30°C~+70°C
Electrical Life: 5000 cycles Min.



Material:

Insulator: PBT UL 94V-0 or PA66/PC UL 94V-0
Terminal: Brass ,plating Ni.



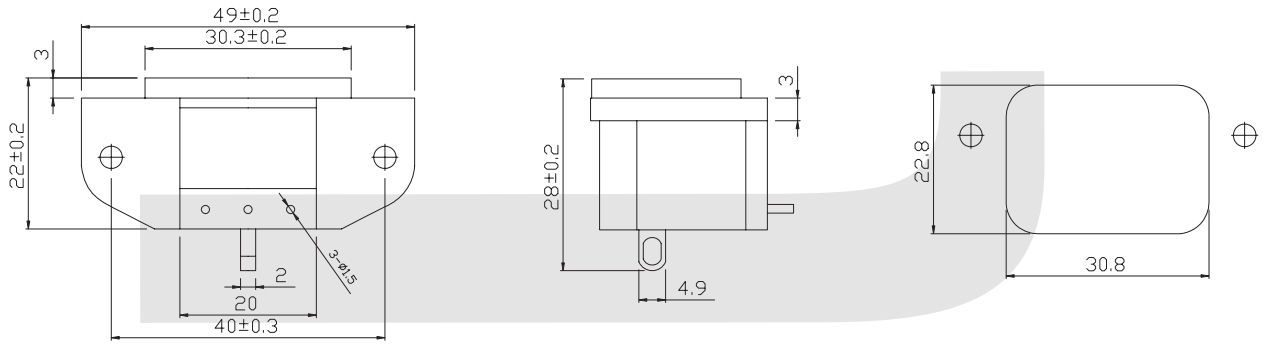

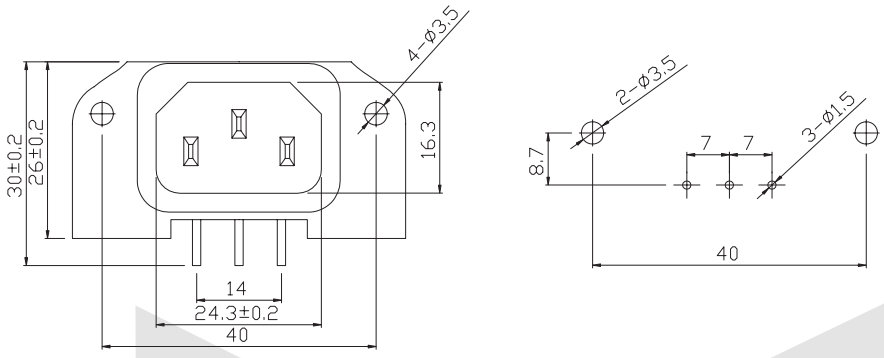

ORDER INFORMATION

Product NO.: KLS1-AS-301-2

Pos. NO.

AC Inlet Type

AC INLET Series

KLS1-AS-301-3 IEC AC INLET Series

SPECIFICATION:

Current Rating: 250V AC 10A
Contact Resistance: 30mΩ Max.
Insulator Resistance: 100MΩ Min. at DC 500V
Dielectric withstand Strength test: 2000VAC / 1 minute
between each terminals
Insertion and Removal force: 5 ~ 40N
Operating Temperature: -40°C~+105°C
Electrical Life: 5000 cycles Min.



Material:

Insulator: PBT UL 94V-0 or PA66/PC UL 94V-0
Terminal: Brass ,plating Ni.



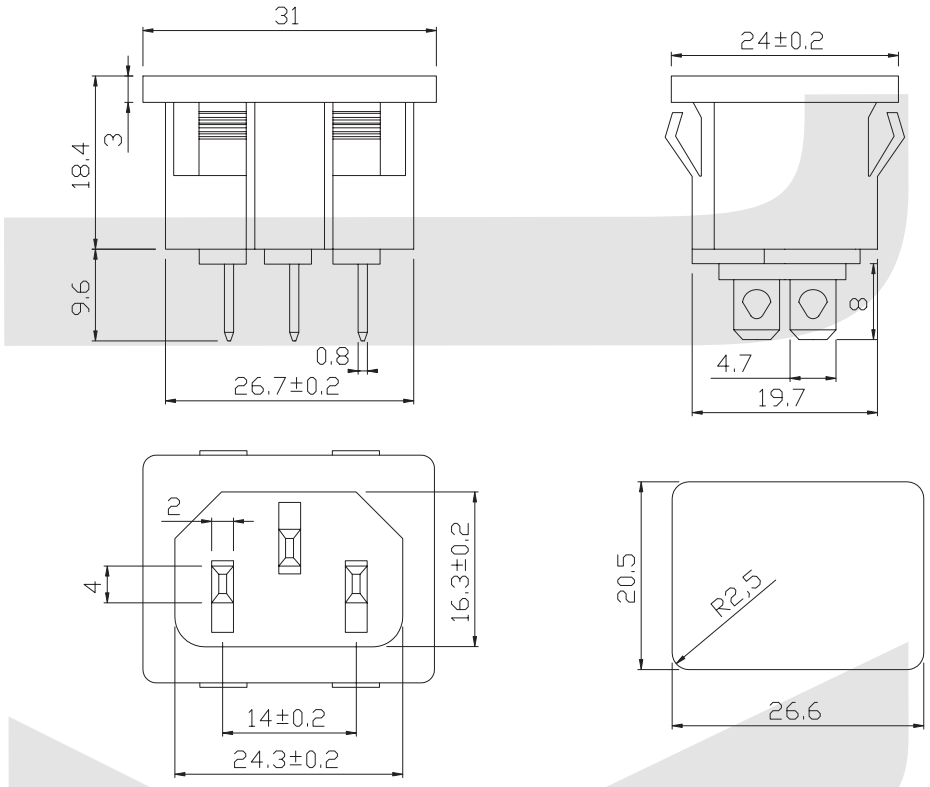

ORDER INFORMATION

Product NO.: KLS1-AS-301-3

Pos. NO.

AC Inlet Type

AC INLET Series

KLS1-AS-301-4 IEC AC INLET Series

SPECIFICATION:

Current Rating: 250V AC 10A
Contact Resistance: 30mΩ Max.
Insulator Resistance: 100MΩ Min. at DC 500V
Dielectric withstand Strength test: 2000VAC / 1 minute
between each terminals
Insertion and Removal force: 5 ~ 40N
Operating Temperature: -45°C~+105°C
Electrical Life: 5000 cycles Min.

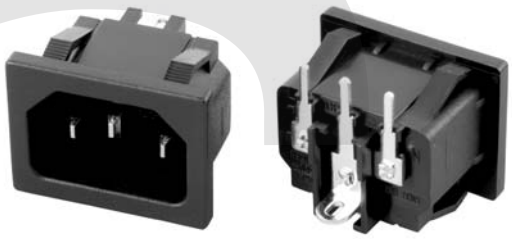

Material:

Insulator: PBT UL 94V-0 or PA66/PC UL 94V-0
Terminal: Brass ,plating Ni.



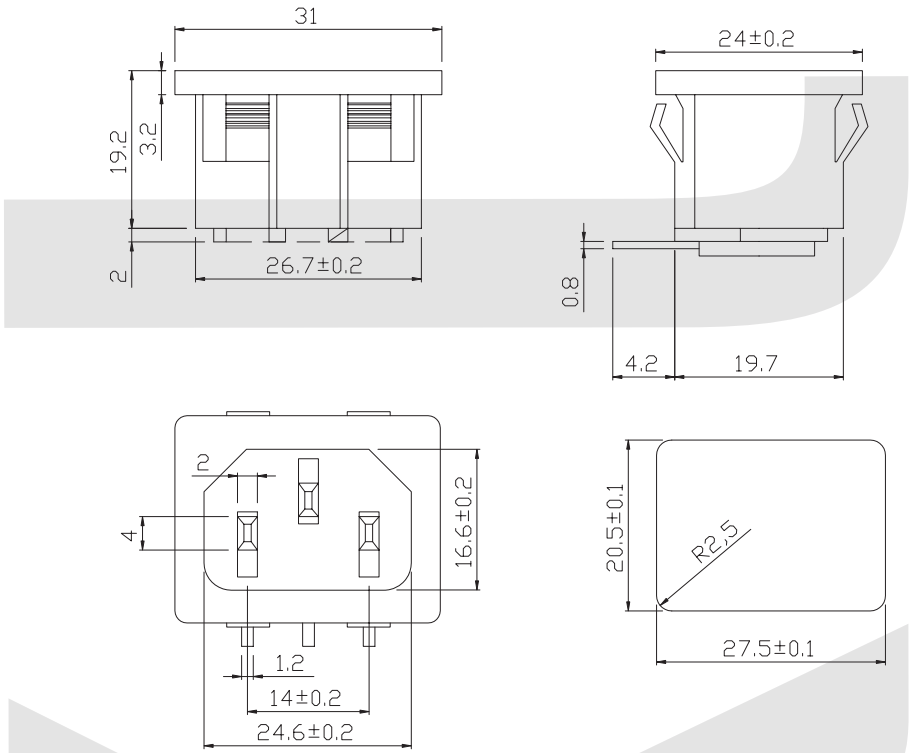

ORDER INFORMATION

Product NO.: KLS1-AS-301-4

Pos. NO.

AC Inlet Type

AC INLET Series

KLS1-AS-301-5 IEC AC INLET Series

SPECIFICATION:

Standard: IEC 60320 C8
Voltage rating: 250V AC
Rating: 250VAC 10A (2.5A)
InsulationResistance: 100MΩ 500V DC / 1 minute
Dielectric Strength: 2000V AC / 1 minute
Temperature range: -45°C ~ +105°C



Material:

Housing Material: PBT UL 94V-0 or PA66/PC UL 94V-0
Terminal: Brass ,plating Ni.



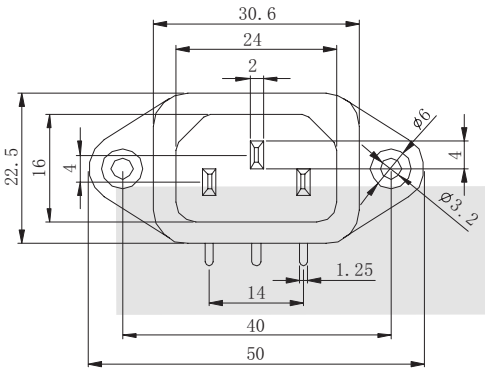

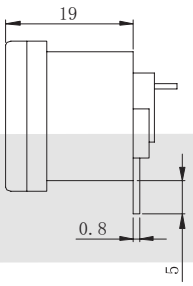

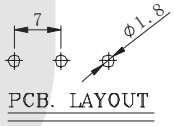

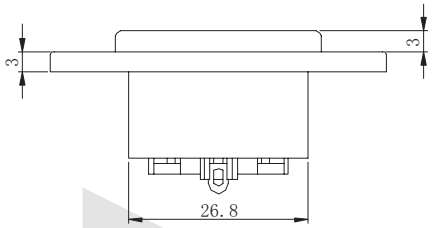

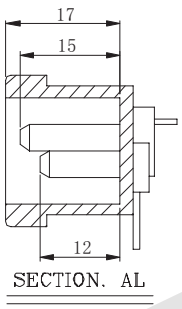

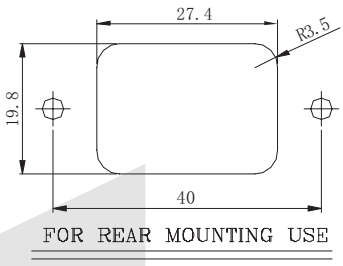

ORDER INFORMATION

Product NO.: KLS1-AS-301-5

Pos. NO.

AC Inlet Type

I

AC INLET Series

KLS1-AS-301-6 IEC AC INLET Series

SPECIFICATION:

Standard: IEC 60320 C8
Voltage rating: 250V AC
Rating: 250VAC 10A (2.5A)
InsulationResistance: 100MΩ 500V DC / 1 minute
Dielectric Strength: 2000V AC / 1 minute
Temperature range: -45°C ~ +105°C



Material:

Housing Material: PBT UL 94V-0 or PA66/PC UL 94V-0
Terminal: Brass ,plating Ni.



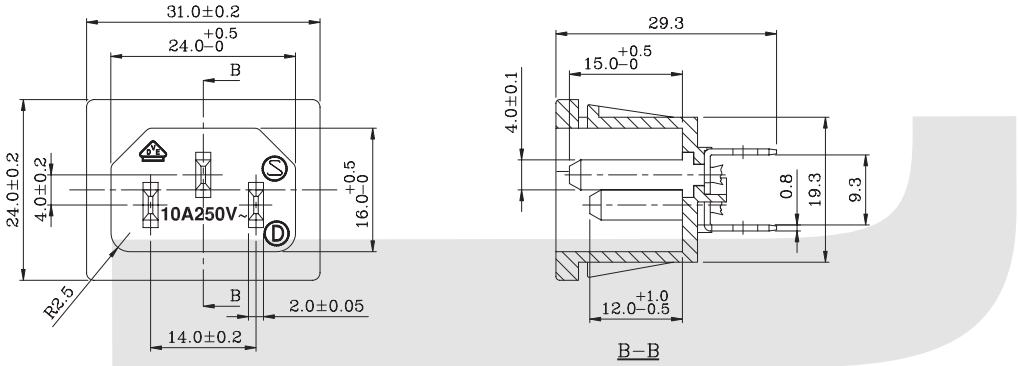

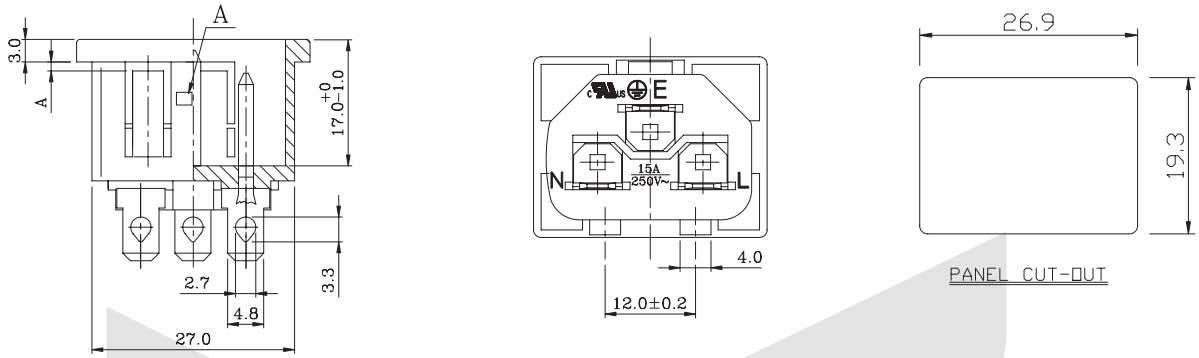

ORDER INFORMATION

Product NO.: KLS1-AS-301-6

Pos. NO.

AC Inlet Type

AC INLET Series

KLS1-AS-301-11 IEC AC INLET With Fuse Series



SPECIFICATION:

Current Rating: 250V AC 10A
Contact Resistance: 30mΩ Max.
Insulator Resistance: 100MΩ Min. at DC 500V
Dielectric withstand Strength test: 2000VAC / 1 minute
between each terminals
Insertion and Removal force: 5 ~ 40N
Operating Temperature: -45°C~+105°C
Electrical Life: 5000 cycles Min.

Material:

Housing Material: PBT UL 94V-0 or PA66/PC UL 94V-0
Terminal: Brass ,plating Ni.



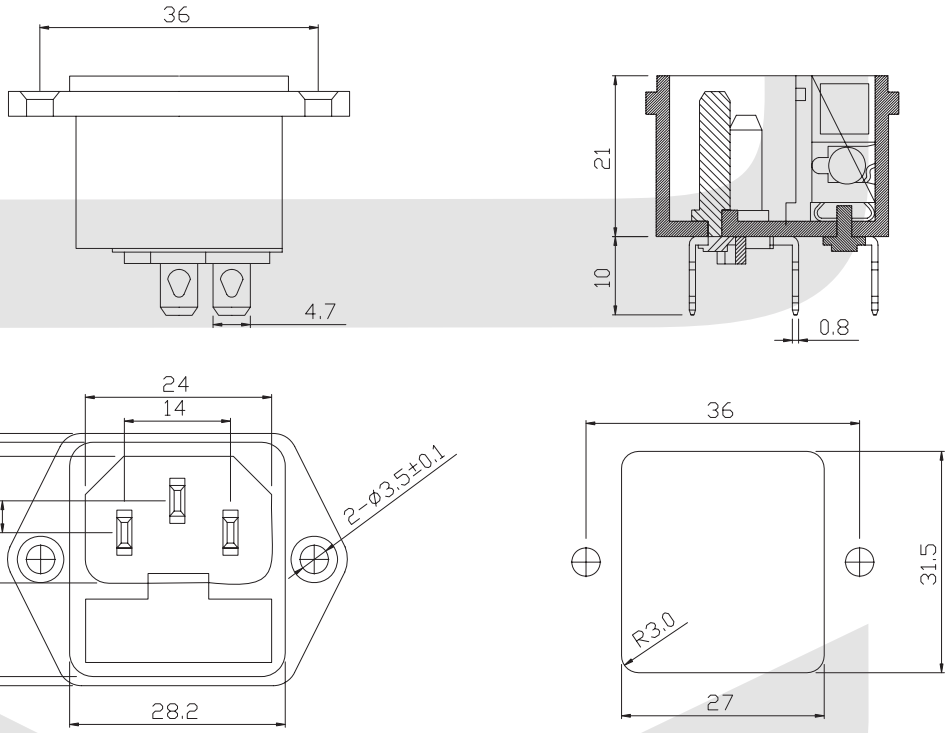

ORDER INFORMATION

Product NO.: KLS1-AS-301-11

Pos. NO.

AC Inlet Type

AC INLET Series

KLS1-AS-301-12 IEC AC INLET With Fuse Series

SPECIFICATION:

Current Rating: 250V AC 10A
Contact Resistance: 30mΩ Max.
Insulator Resistance: 100MΩ Min. at DC 500V
Dielectric withstand Strength test: 2000VAC / 1 minute
between each terminals
Insertion and Removal force: 5 ~ 40N
Operating Temperature: -45°C~+105°C
Electrical Life: 5000 cycles Min.



Material:

Housing Material: PBT UL 94V-0 or PA66/PC UL 94V-0
Terminal: Brass ,plating Ni.



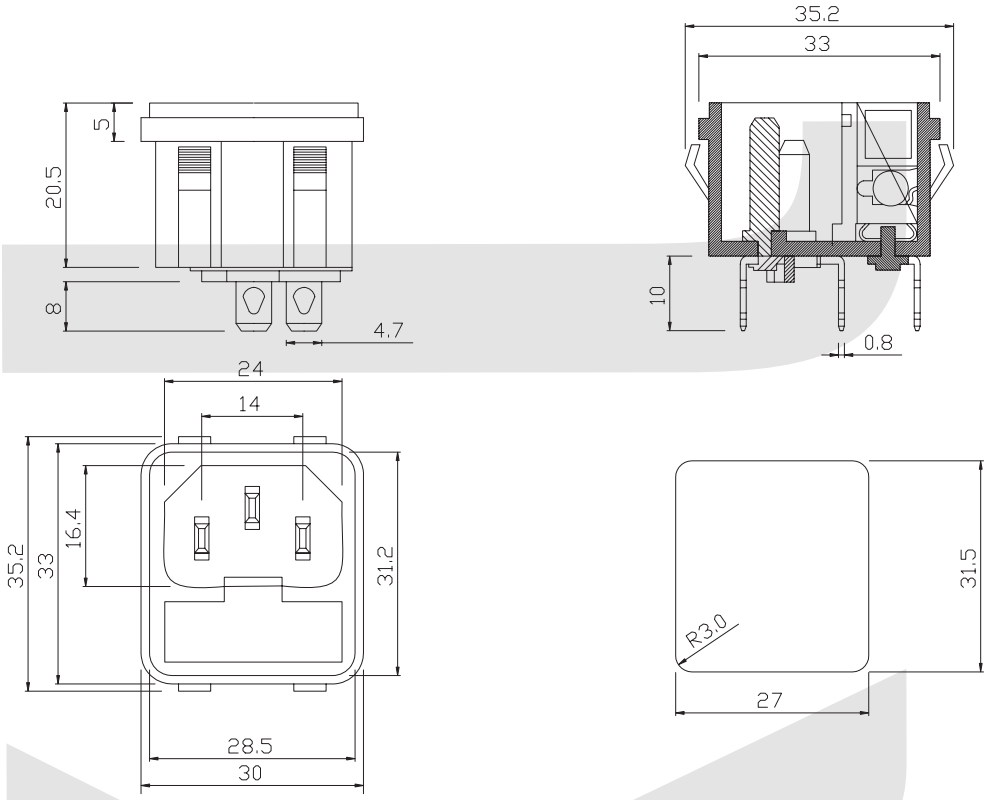

ORDER INFORMATION

Product NO.: KLS1-AS-301-12

Pos. NO.

AC Inlet Type

AC INLET Series

KLS1-AS-302-1 IEC AC INLET Series

SPECIFICATION:

Current Rating: 250V AC 10A
Contact Resistance: 30mΩ Max.
Insulator Resistance: 100MΩ Min. at DC 500V
Dielectric withstand Strength test: 2000VAC / 1 minute
between each terminals
Insertion and Removal force: 5 ~ 40N
Operating Temperature: -45°C~+105°C
Electrical Life: 5000 cycles Min.



Material:

Insulator: PBT UL 94V-0 or PA66/PC UL 94V-0
Terminal: Brass ,plating Ni.



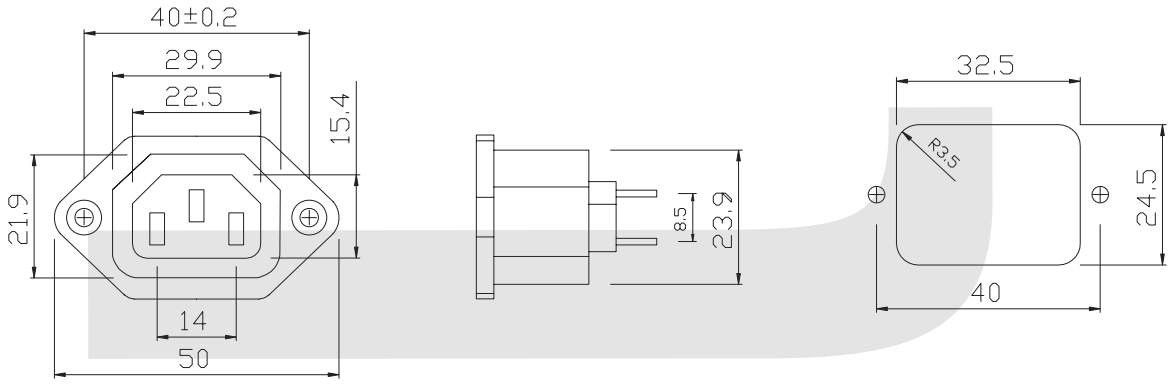

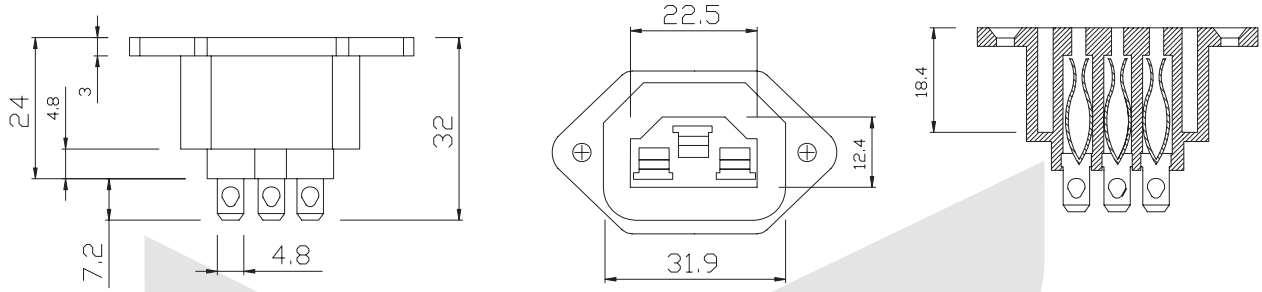

ORDER INFORMATION

Product NO.: KLS1-AS-302-1

Pos. NO.

AC Inlet Type

AC INLET Series

KLS1-AS-302-2 IEC AC INLET Series

SPECIFICATION:

Current Rating: 250V AC 10A
Contact Resistance: 30mΩ Max.
Insulator Resistance: 100MΩ Min. at DC 500V
Dielectric withstand Strength test: 2000VAC / 1 minute
between each terminals
Insertion and Removal force: 5 ~ 40N
Operating Temperature: -45°C~+105°C
Electrical Life: 5000 cycles Min.



Material:

Insulator: PBT UL 94V-0 or PA66/PC UL 94V-0
Terminal: Brass ,plating Ni.



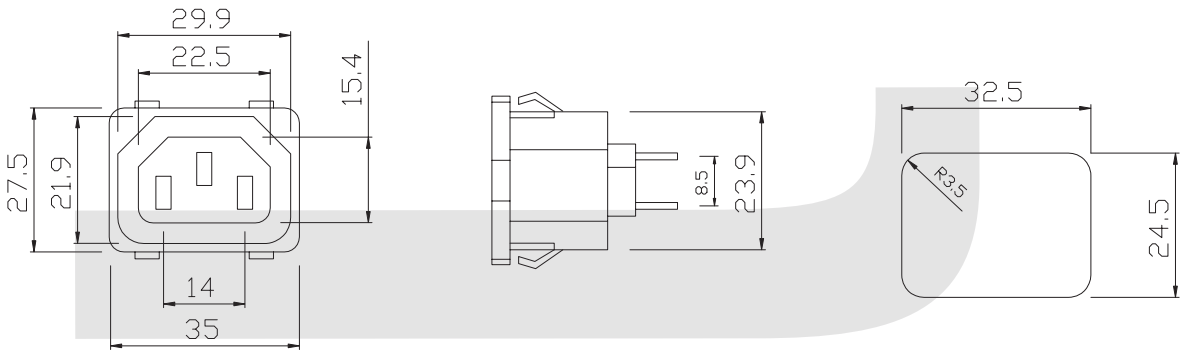

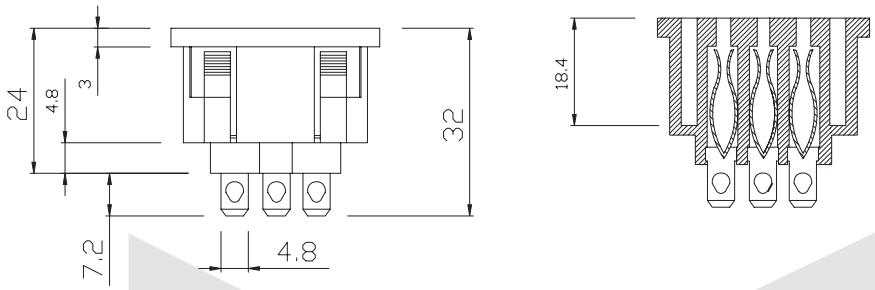

ORDER INFORMATION

Product NO.: KLS1-AS-302-2

Pos. NO.
AC Inlet Type

I

AC INLET Series

KLS1-AS-303 IEC AC INLET With Fuse+Rocker Switch Series

SPECIFICATION:

Current Rating: 250V AC 10A
Contact Resistance: 30mΩ Max.
Insulator Resistance: 100MΩ Min. at DC 500V
Dielectric withstand Strength test: 2000VAC / 1 minute
between each terminals
Insertion and Removal force: 5 ~ 40N
Operating Temperature: -45°C~+105°C
Electrical Life: 5000 cycles Min.

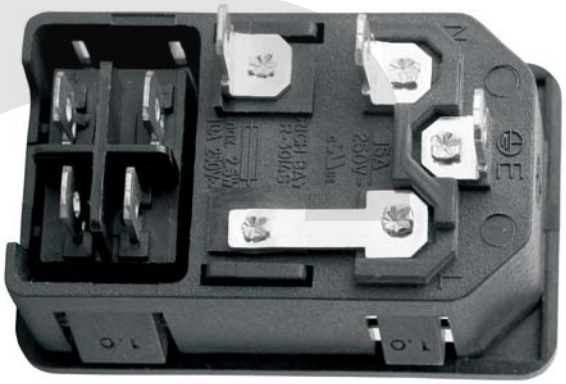

Material:

Insulator: PBT UL 94V-0 or PA66/PC UL 94V-0
Terminal: Brass ,plating Ni.



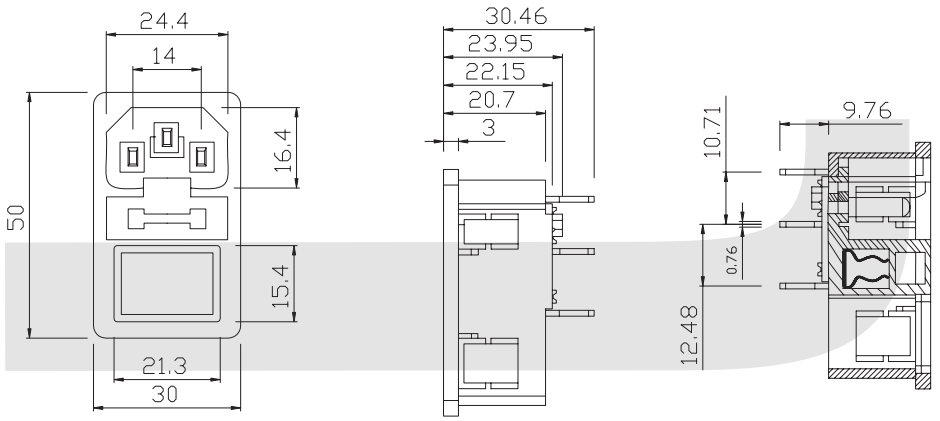

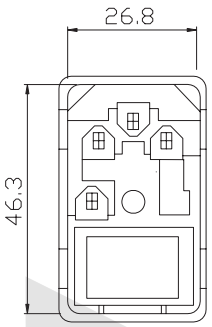

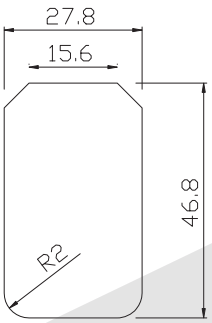

ORDER INFORMATION

Product NO.: KLS1-AS-303

Pos. NO.

AC Inlet Type

AC INLET Series

KLS1-AS-303-1 IEC AC INLET With Fuse+Rocker Switch Series

SPECIFICATION:

Current Rating: 250V AC 10A
Contact Resistance: 30mΩ Max.
Insulator Resistance: 100MΩ Min. at DC 500V
Dielectric withstand Strength test: 2000VAC / 1 minute
between each terminals
Insertion and Removal force: 5 ~ 40N
Operating Temperature: -45°C~+105°C
Electrical Life: 5000 cycles Min.



Material:

Insulator: PBT UL 94V-0 or PA66/PC UL 94V-0
Terminal: Brass ,plating Ni.



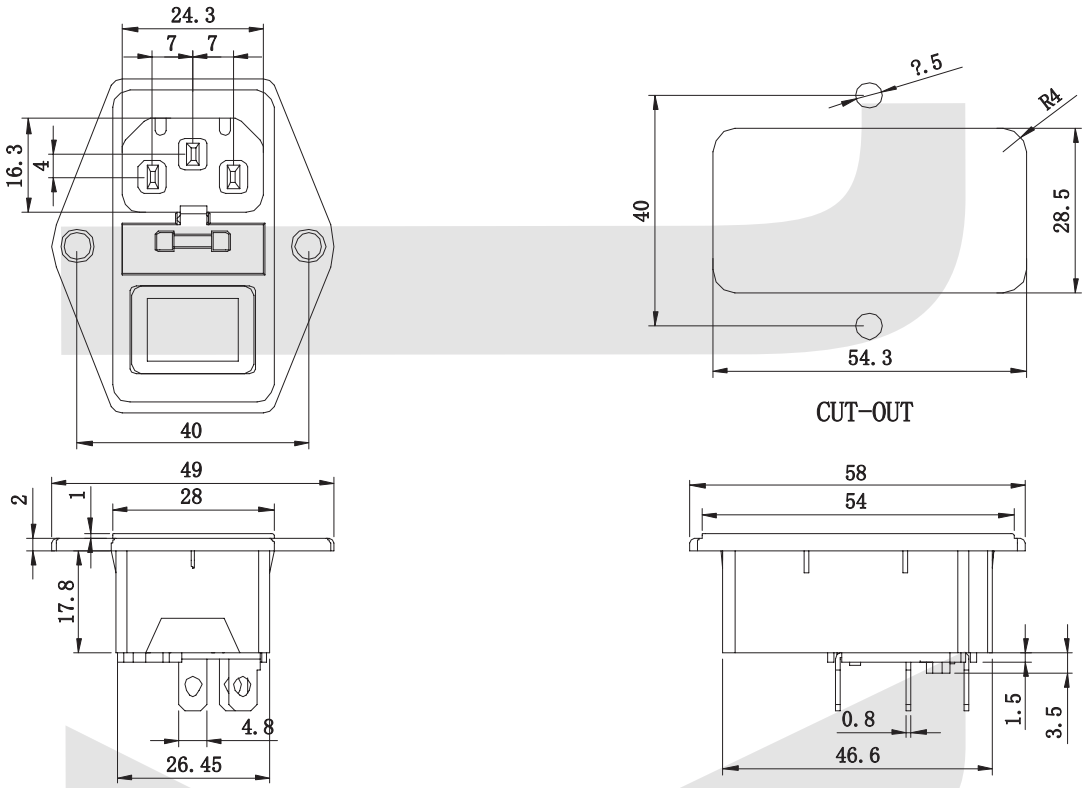

ORDER INFORMATION

Product NO.: KLS1-AS-303-1

Pos. NO.
AC Inlet Type

AC INLET Series

KLS1-AS-303-2 IEC AC INLET With Rocker Switch Series

I

SPECIFICATION:

Current Rating: 250V AC 10A
Contact Resistance: 30mΩ Max.
Insulator Resistance: 100MΩ Min. at DC 500V
Dielectric withstand Strength test: 2000VAC / 1 minute
between each terminals
Insertion and Removal force: 5 ~ 40N
Operating Temperature: -45°C~+105°C
Electrical Life: 5000 cycles Min.



Material:

Insulator: PBT UL 94V-0 or PA66/PC UL 94V-0
Terminal: Brass ,plating Ni.



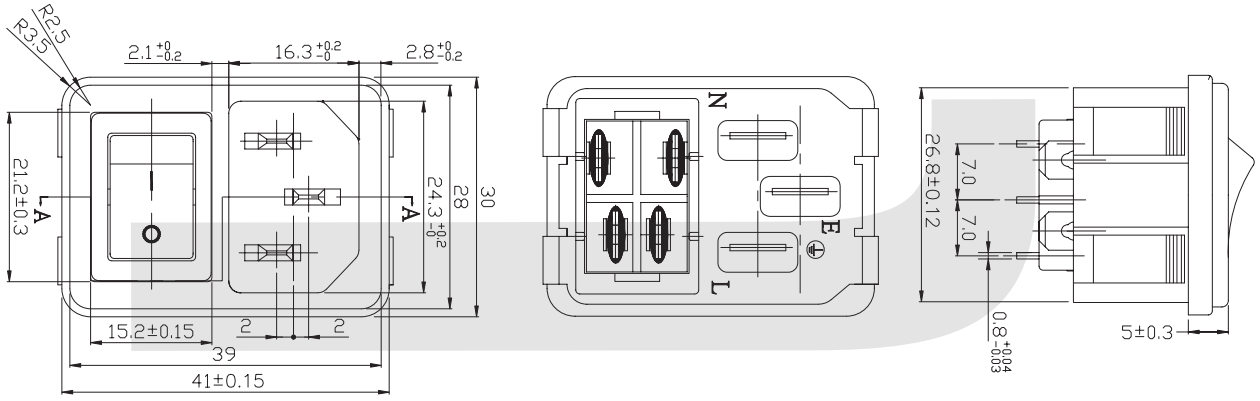

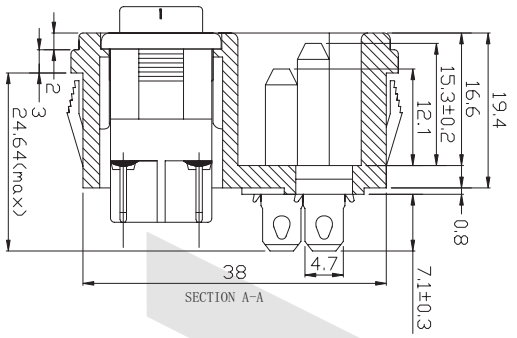

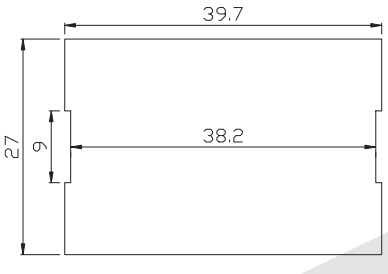

Mounting Hole
Panel Thickness: 0.8-2.0mm

ORDER INFORMATION

Product NO.: KLS1-AS-303-2

Pos. NO.
AC Inlet Type

AC INLET Series

KLS1-AS-303-3 IEC AC INLET With Rocker Switch Series

SPECIFICATION:

Current Rating: 250V AC 10A
Contact Resistance: 30mΩ Max.
Insulator Resistance: 100MΩ Min. at DC 500V
Dielectric withstand Strength test: 2000VAC / 1 minute
between each terminals
Insertion and Removal force: 5 ~ 40N
Operating Temperature: -45°C~+105°C
Electrical Life: 5000 cycles Min.



Material:

Insulator: PBT UL 94V-0 or PA66/PC UL 94V-0
Terminal: Brass ,plating Ni.



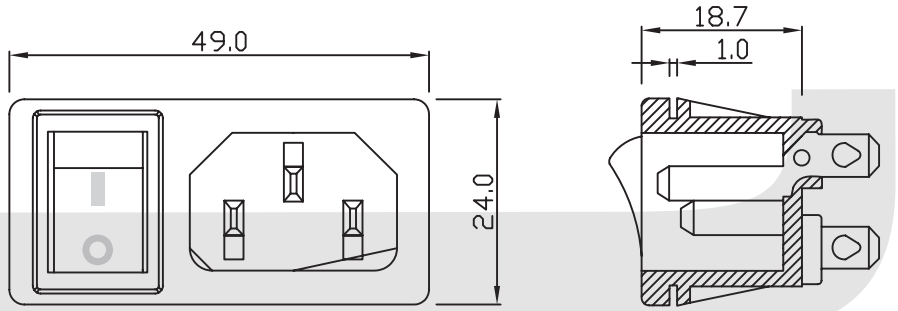

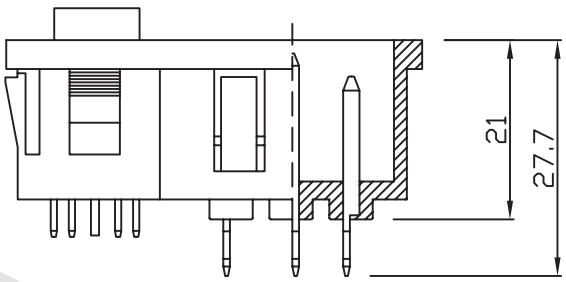

ORDER INFORMATION

Product NO.: KLS1-AS-303-3

Pos. NO.
AC Inlet Type

AC INLET Series

KLS1-ASS-201 AC INLET Series



SPECIFICATION:

Standard: IEC 60320 C8
Voltage rating: 250V AC
Rating: 250VAC 10A (2.5A)
InsulationResistance: 100MΩ 500V DC / 1 minute
Dielectric Strength: 2000V AC / 1 minute
Temperature range: -45°C ~ +105°C

Material:

Housing Material: PBT or Nylon 66 UL 94V-0, V-2
Terminal: Brass ,plating Ni.

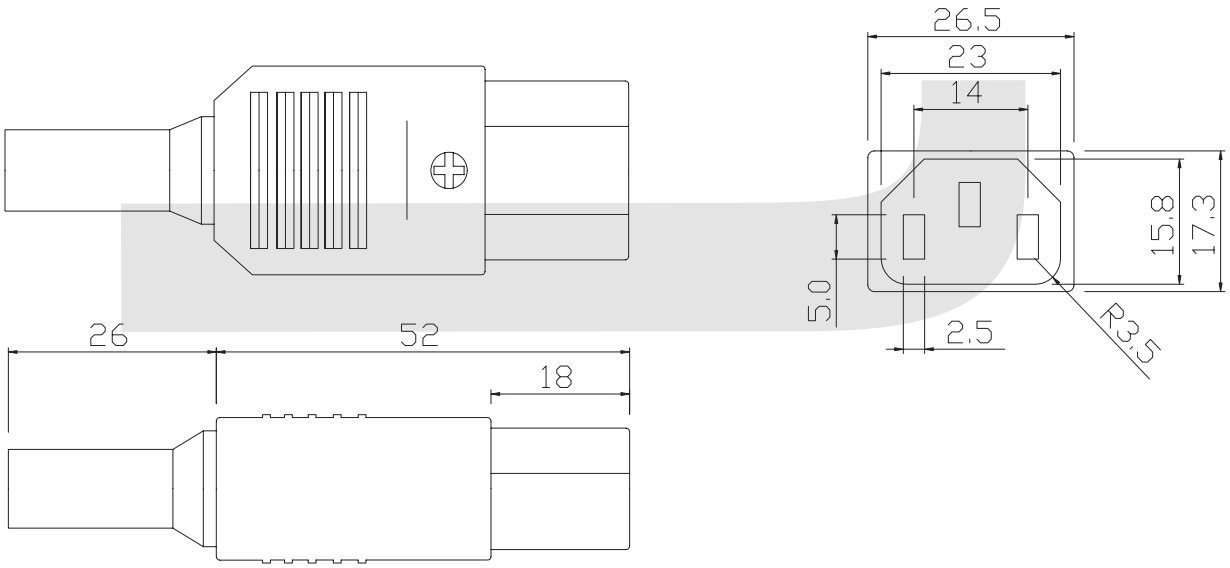

ORDER INFORMATION

Product NO.: KLS1- ASS-201

Pos. NO.

AC Inlet Type

AC INLET Series

KLS1-ASS-202 AC INLET Series



SPECIFICATION:

Standard: IEC 60320 C8
Voltage rating: 250V AC
Rating: 250VAC 10A (2.5A)
InsulationResistance: 100MΩ 500V DC / 1 minute
Dielectric Strength: 2000V AC / 1 minute
Temperature range: -45°C ~ +105°C

Material:

Housing Material: PBT UL 94V-0 or PA66/PC UL 94V-0
Terminal: Brass ,plating Ni.



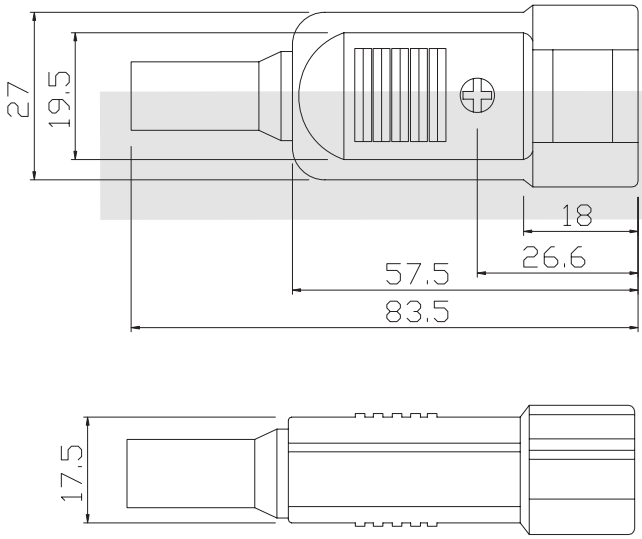

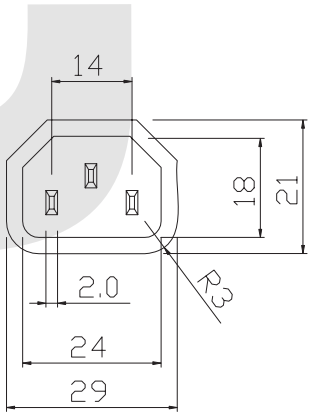

ORDER INFORMATION

Product NO.: KLS1- ASS-202

Pos. NO.

AC Inlet Type

AC INLET Series

KLS1-ASS-203-F AC INLET Series

SPECIFICATION:

Standard: IEC 60320 C8
Voltage rating: 250V AC
Rating: 250VAC 10A (2.5A)
InsulationResistance: 100MΩ 500V DC / 1 minute
Dielectric Strength: 2000V AC / 1 minute
Temperature range: -45°C ~ +105°C

Material:

Housing Material: PBT UL 94V-0 or PA66/PC UL 94V-0
Terminal: Brass ,plating Ni.



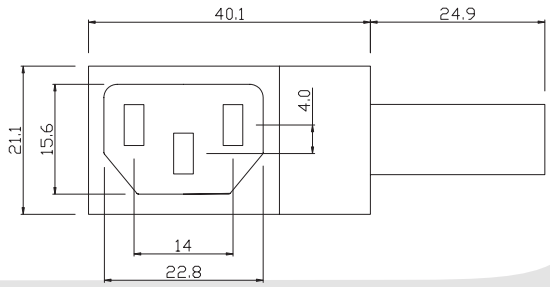

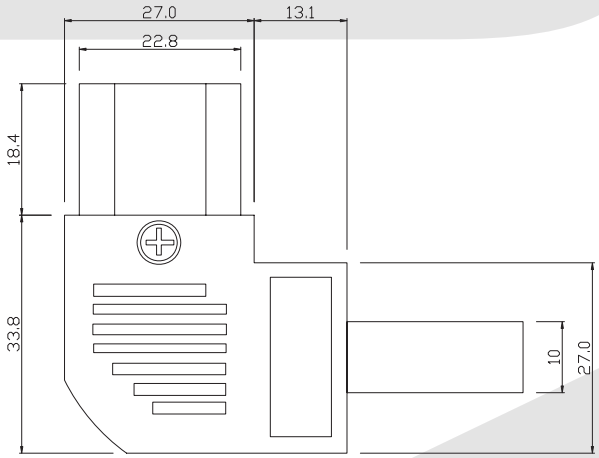

ORDER INFORMATION

Product NO.: KLS1-ASS-203-F

Pos. NO.
AC Inlet Type

AC INLET Series

KLS1-ASS-203-M AC INLET Series

SPECIFICATION:

Standard: IEC 60320 C8
Voltage rating: 250V AC
Rating: 250VAC 10A (2.5A)
InsulationResistance: 100MΩ 500V DC / 1 minute
Dielectric Strength: 2000V AC / 1 minute
Temperature range: -45°C ~ +105°C



Material:

Housing Material: PBT UL 94V-0 or PA66/PC UL 94V-0
Terminal: Brass ,plating Ni.



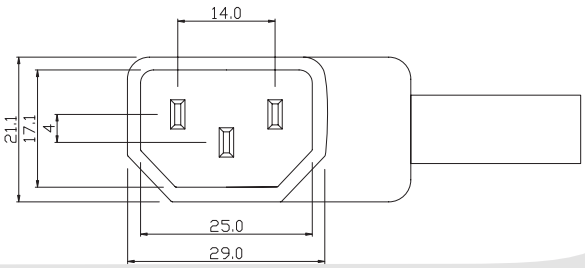

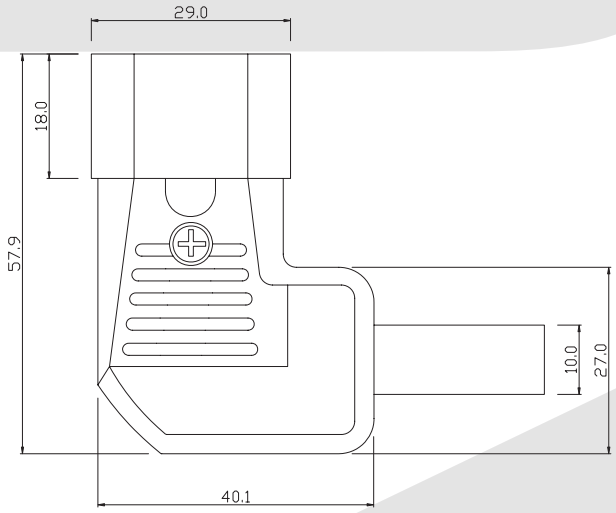

ORDER INFORMATION

Product NO.: KLS1-ASS-203-M

Pos. NO.
AC Inlet Type

Cigar lighter plug






















Cigar lighter and charger

KLS electronic
www.cnkls.com

Cigar lighter plug



















Cigar lighter and charger

KLS electronic
www.cnkls.com

Cigarette Lighter Plug






















Cigar lighter and charger

KLS electronic
www.cnkls.com

Cigarette Lighter Plug






















Cigar lighter and charger

KLS electronic
www.cnkls.com

Cigarette Lighter Plug





















All specification & dimensions are subject to change, please call your nearest KLS sales represesntative for update information

Cigar lighter socket









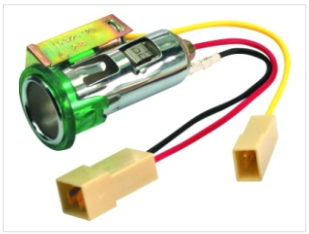



Cigar lighter and charger

KLS electronic
www.cnkls.com

Cigar lighter

















Cigar lighter and charger

KLS electronic
www.cnkls.com

Cigar lighter








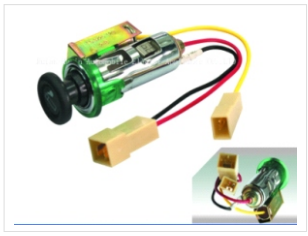













Cell Box Series

KLS5-817 UM-4 OR "AAA" Cell Box Series

WIRE: UL 1007, # 26 AWG
BLACK & RED: 150 MM ± 5MM
STRIP & TIN: 5 MM ± 1MM
MATERIAL: A. B. S. RESIN BLACK COLOR
SPRING: .6 MM 65C SPRING WIRE
DESCR.: FOR ONE "AAA" CELLS



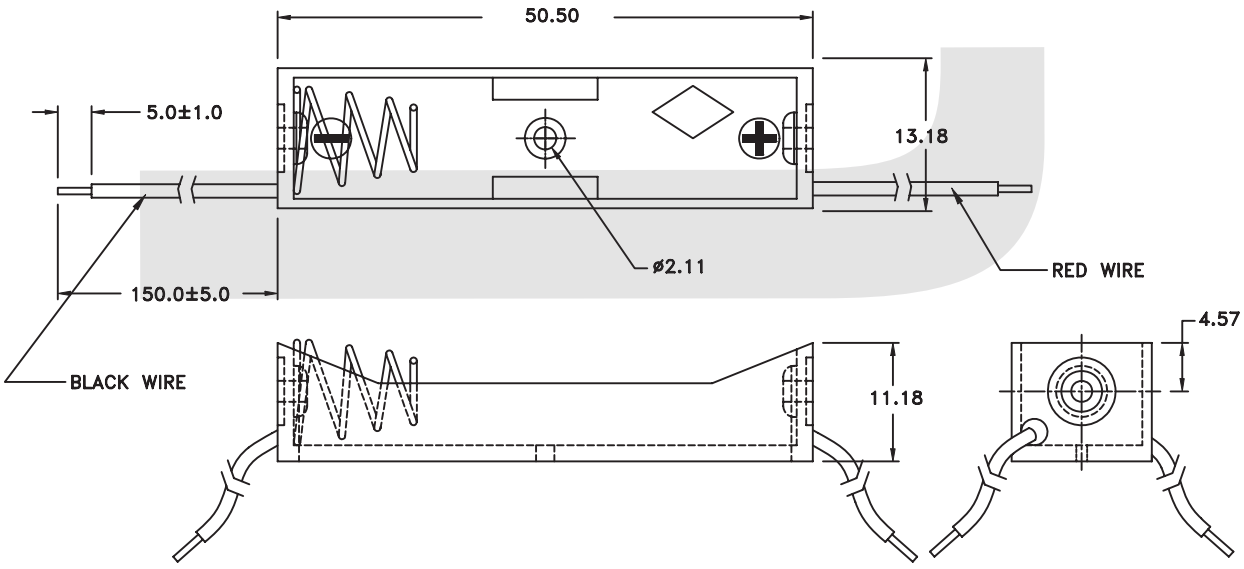

ORDER INFORMATION

Product NO.: KLS5-817-B

Part Number
Cell Box Series

TYPE:
A:With Soldered lug
B:With Wire L=15cm or other
D:With Pin

Cell Box Series

KLS5-817 UM-4 OR "AAA" Cell Box Series

WIRE: UL 1007, # 26 AWG
BLACK & RED: 150 MM ± 5MM
STRIP & TIN: 5 MM ± 1MM
MATERIAL: A. B. S. RESIN BLACK COLOR
SPRING: .6 MM 65C SPRING WIRE
DESCR.: FOR ONE "AAA" CELLS



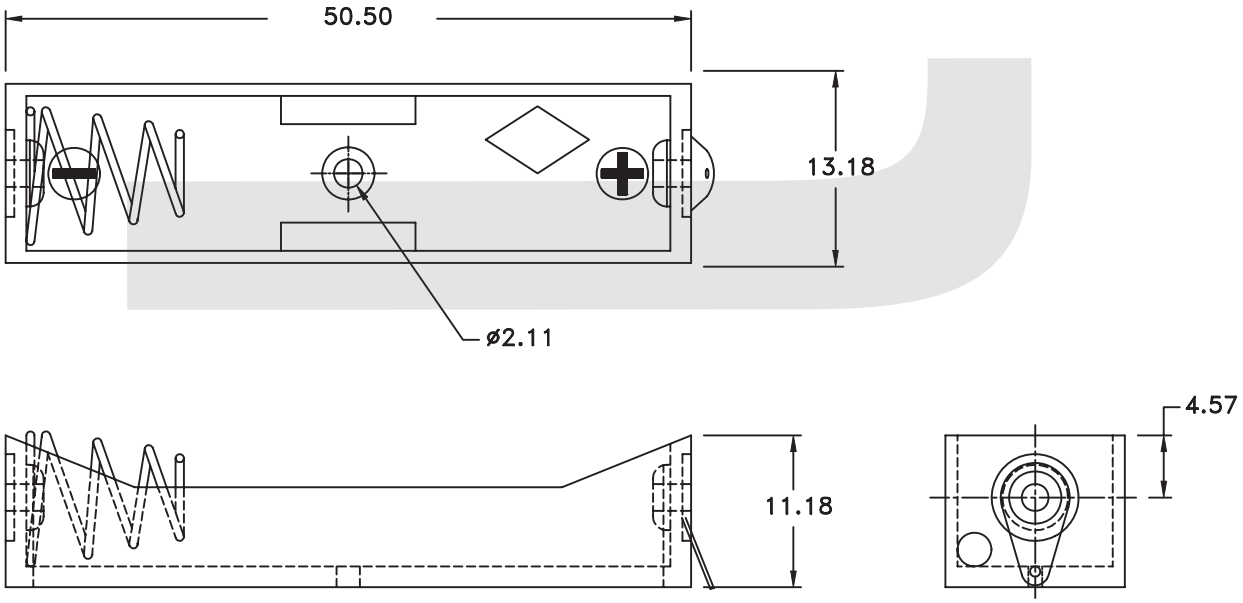

ORDER INFORMATION

Product NO.: KLS5-817-A

Part Number
Cell Box Series

TYPE:
A:With Soldered lug
B:With Wire L=15cm or other
D:With Pin

Cell Box Series

KLS5-817 UM-4 OR "AAA" Cell Box Series

WIRE: UL 1007, # 26 AWG
BLACK & RED: 150 MM ± 5MM
STRIP & TIN: 5 MM ± 1MM
MATERIAL: A. B. S. RESIN BLACK COLOR
SPRING: .6 MM 65C SPRING WIRE
DESCR.: FOR ONE "AAA" CELLS



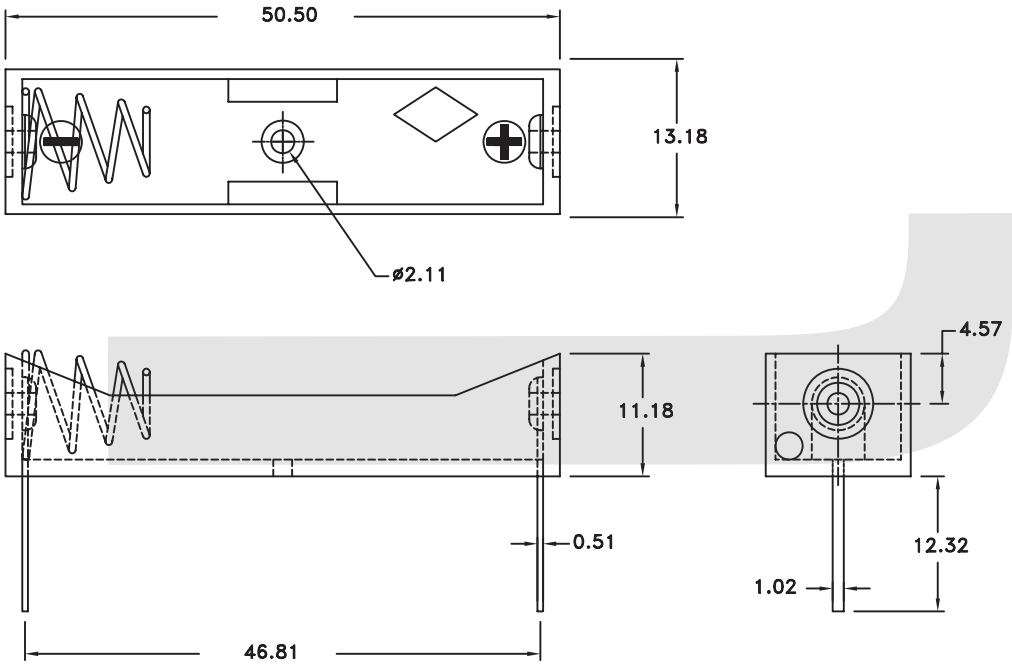

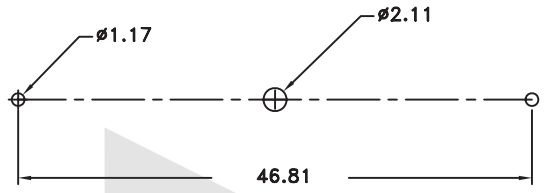

PCB LAYOUT

ORDER INFORMATION

Product NO.: KLS5-817-D

Part Number
Cell Box Series

TYPE:
A:With Soldered lug
B:With Wire L=15cm or other
D:With Pin

Cell Box Series

KLS5-818 UM-4 OR "AAA" Cell Box Series

WIRE: UL 1007, # 26 AWG
BLACK & RED: 150 MM ± 5MM
STRIP & TIN: 5 MM ± 1MM
MATERIAL: A. B. S. RESIN BLACK COLOR
SPRING: .6 MM 65C SPRING WIRE
DESCR.: FOR Two "AAA" CELLS



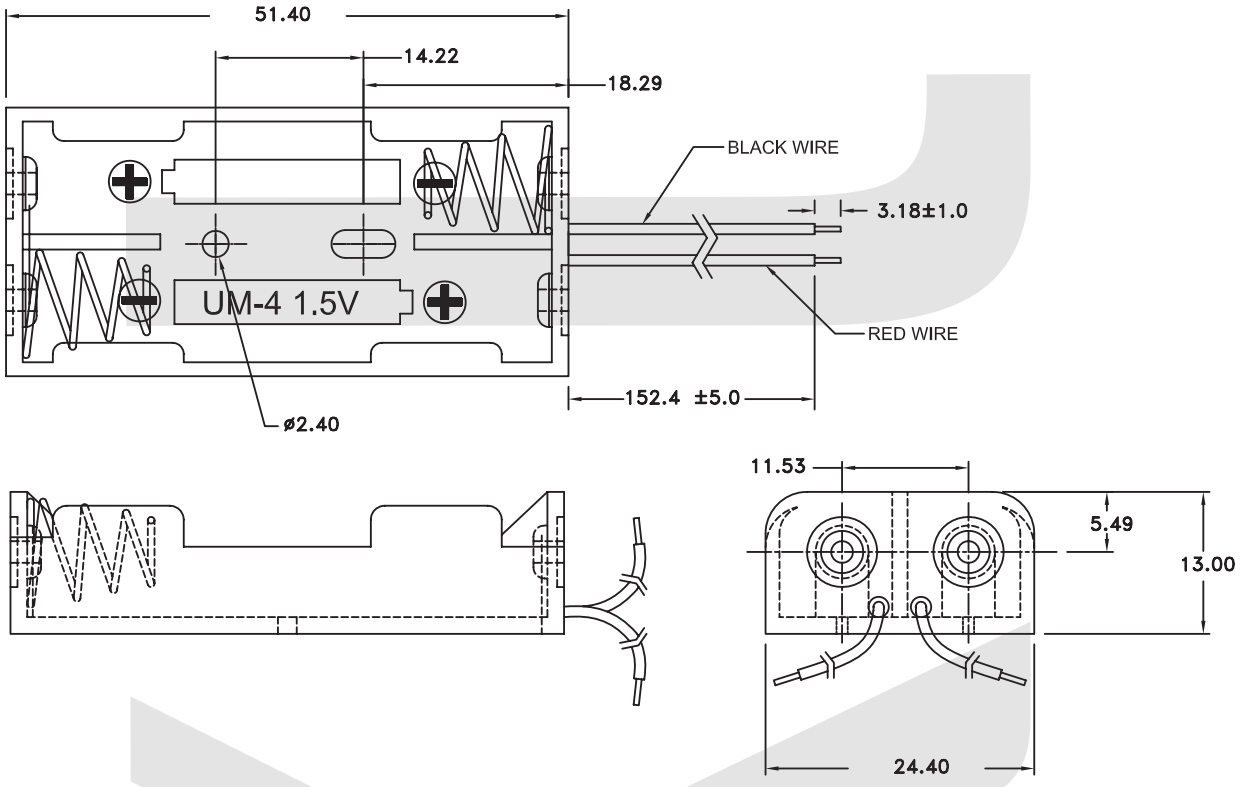

ORDER INFORMATION

Product NO.: KLS5-818-B

Part Number
Cell Box Series

TYPE:
A:With Soldered lug
B:With Wire L=15cm or other
C:With 6 Prong snap
D:With Pin

Cell Box Series

KLS5-818 UM-4 OR "AAA" Cell Box Series

WIRE: UL 1007, # 26 AWG
BLACK & RED: 150 MM ± 5MM
STRIP & TIN: 5 MM ± 1MM
MATERIAL: A. B. S. RESIN BLACK COLOR
SPRING: .6 MM 65C SPRING WIRE
DESCR.: FOR Two "AAA" CELLS



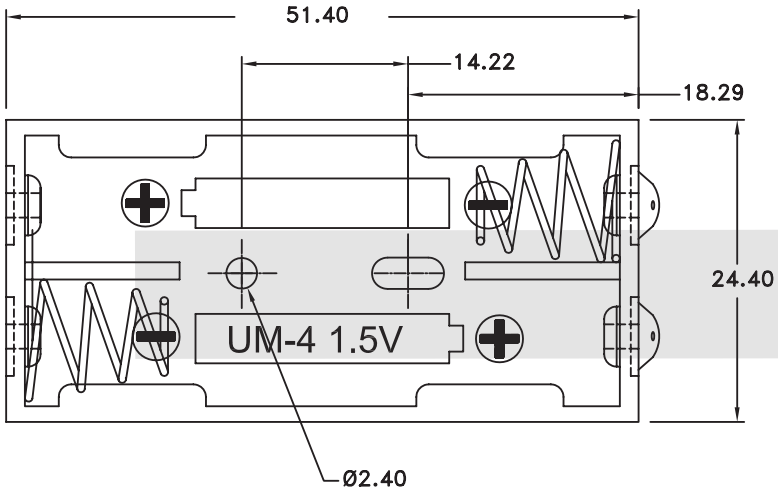

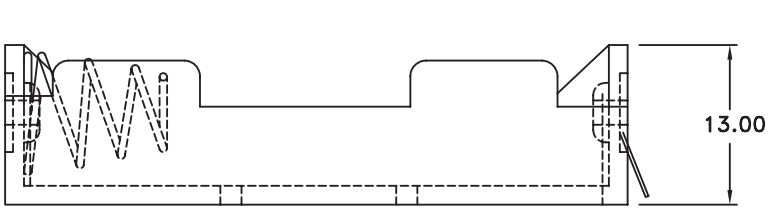

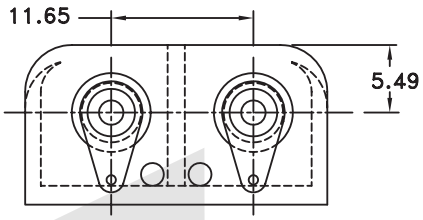

ORDER INFORMATION

Product NO.: KLS5-818-A

Part Number
Cell Box Series

TYPE:
A:With Soldered lug
B:With Wire L=15cm or other
C:With 6 Prong snap
D:With Pin

Cell Box Series

KLS5-818 UM-4 OR "AAA" Cell Box Series

WIRE: UL 1007, # 26 AWG
BLACK & RED: 150 MM ± 5MM
STRIP & TIN: 5 MM ± 1MM
MATERIAL: A. B. S. RESIN BLACK COLOR
SPRING: .6 MM 65C SPRING WIRE
DESCR.: FOR Two "AAA" CELLS



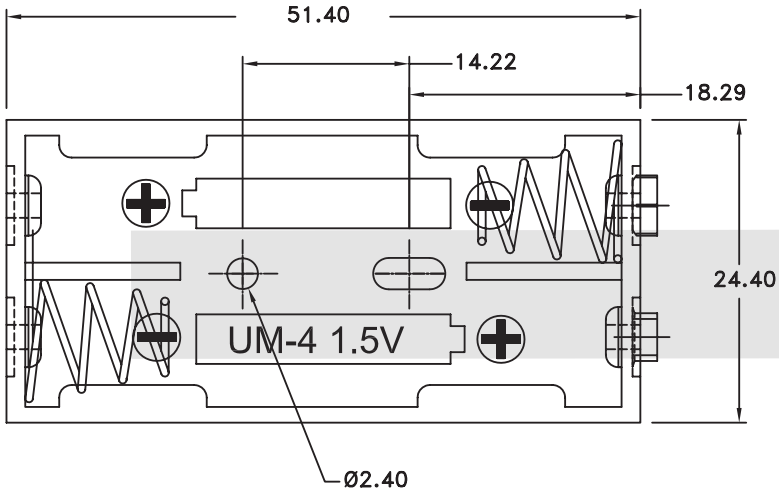

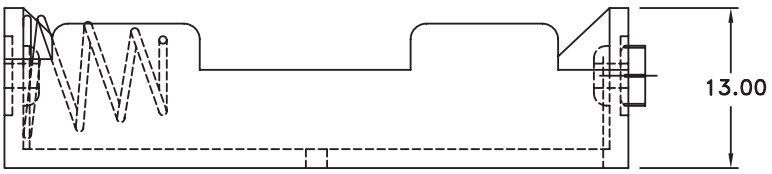

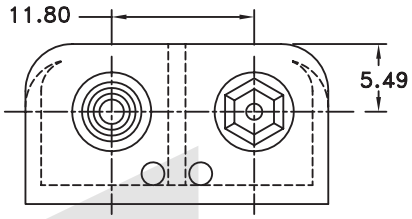

ORDER INFORMATION

Product NO.: KLS5-818-C

Part Number
Cell Box Series

TYPE:
A:With Soldered lug
B:With Wire L=15cm or other
C:With 6 Prong snap
D:With Pin

Cell Box Series

KLS5-818 UM-4 OR "AAA" Cell Box Series

WIRE: UL 1007, # 26 AWG
BLACK & RED: 150 MM ± 5MM
STRIP & TIN: 5 MM ± 1MM
MATERIAL: A. B. S. RESIN BLACK COLOR
SPRING: .6 MM 65C SPRING WIRE
DESCR.: FOR Two "AAA" CELLS



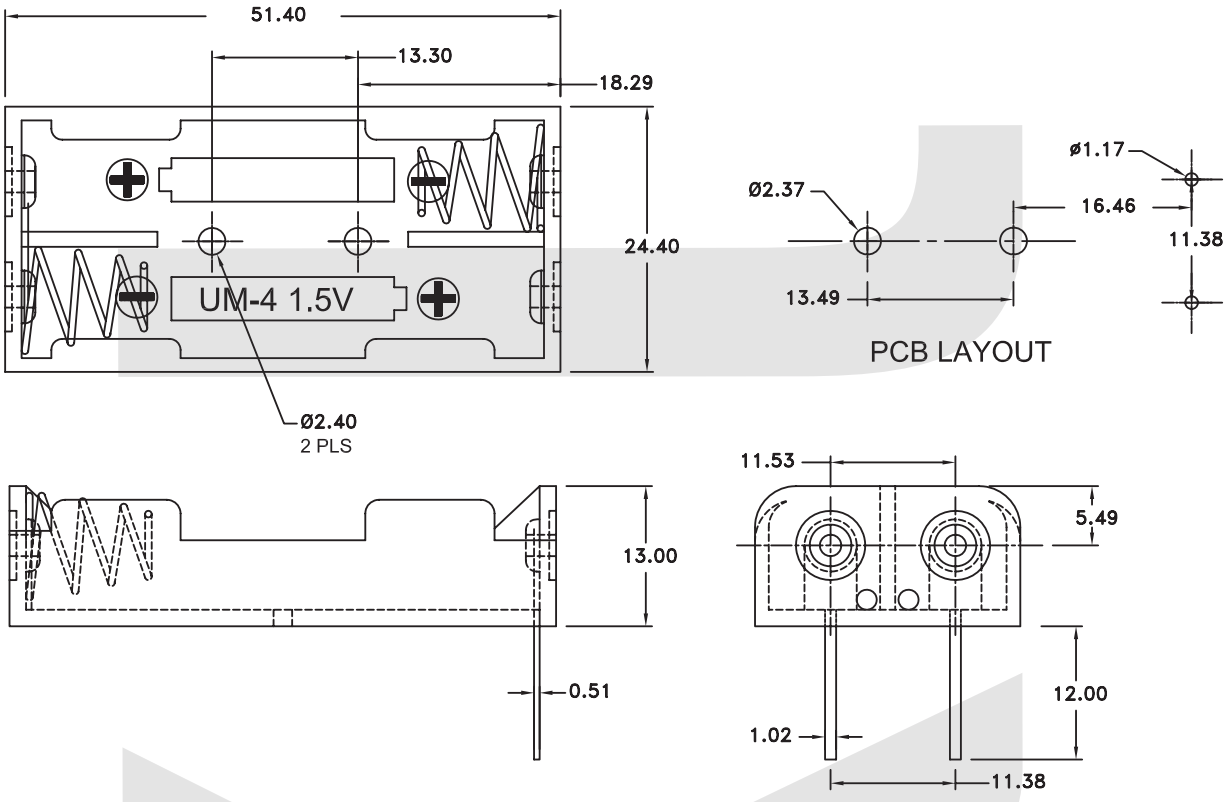

ORDER INFORMATION

Product NO.: KLS5-818-D

Part Number
Cell Box Series

TYPE:
A:With Soldered lug
B:With Wire L=15cm or other
C:With 6 Prong snap
D:With Pin

Cell Box Series

KLS5-819 UM-4 OR "AAA" Cell Box Series

WIRE: UL 1007, # 26 AWG
BLACK & RED: 150 MM ± 5MM
STRIP & TIN: 5 MM ± 1MM
MATERIAL: A. B. S. RESIN BLACK COLOR
SPRING: .6 MM 65C SPRING WIRE
DESCR.: FOR Three "AAA" CELLS



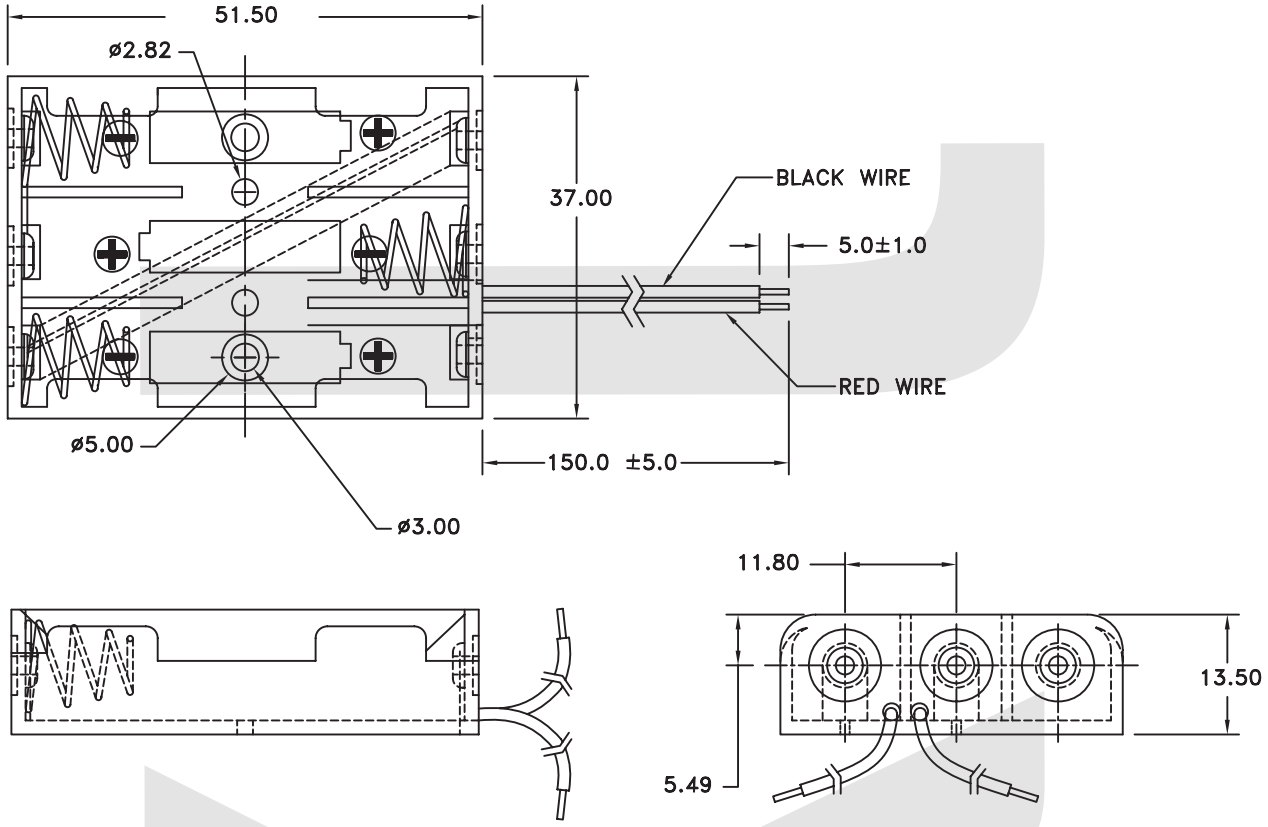

ORDER INFORMATION

Product NO.: KLS5-819-B

Part Number
Cell Box Series

TYPE:
A:With Soldered lug
B:With Wire L=15cm or other
C:With 6 Prong snap
D:With Pin

Cell Box Series

KLS5-819 UM-4 OR "AAA" Cell Box Series

WIRE: UL 1007, # 26 AWG
BLACK & RED: 150 MM ± 5MM
STRIP & TIN: 5 MM ± 1MM
MATERIAL: A. B. S. RESIN BLACK COLOR
SPRING: .6 MM 65C SPRING WIRE
DESCR.: FOR Three "AAA" CELLS



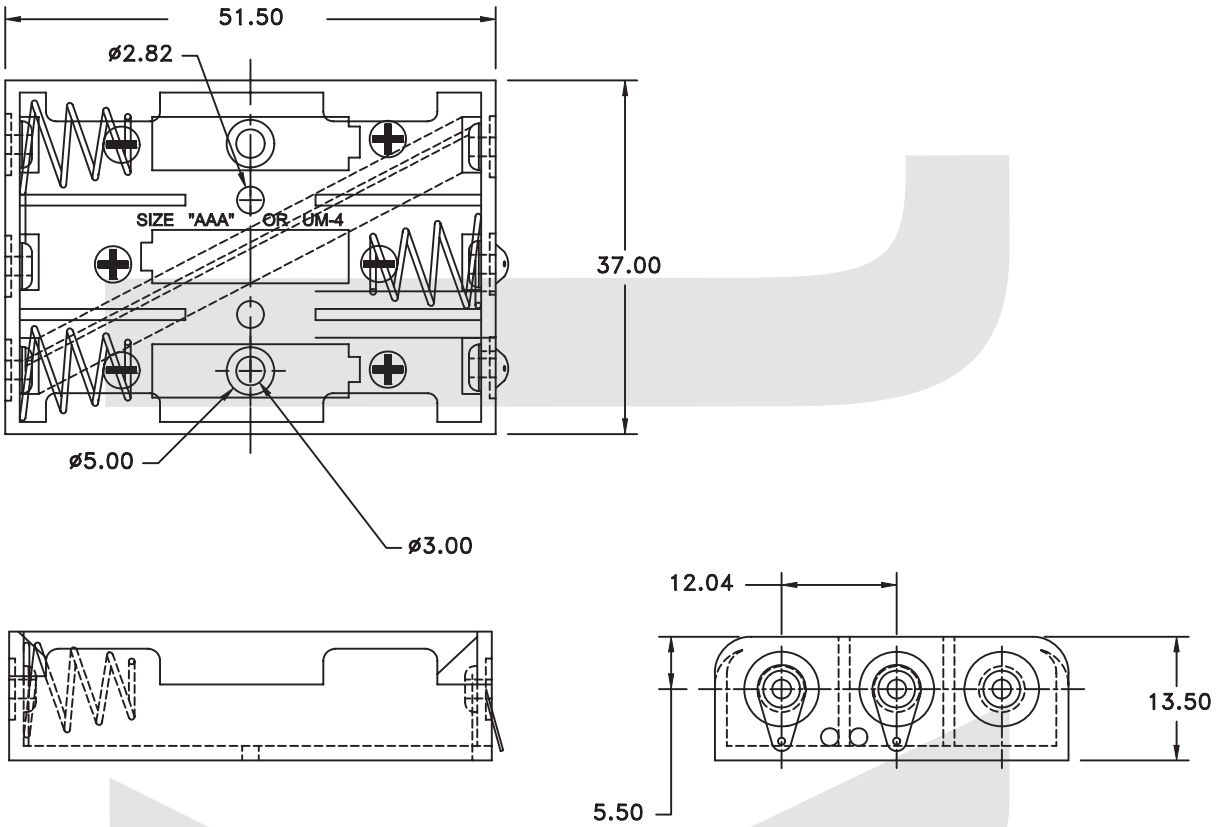

ORDER INFORMATION

Product NO.: KLS5-819-A

Part Number
Cell Box Series

TYPE:
A:With Soldered lug
B:With Wire L=15cm or other
C:With 6 Prong snap
D:With Pin

Cell Box Series

KLS5-819 UM-4 OR "AAA" Cell Box Series

WIRE: UL 1007, # 26 AWG
BLACK & RED: 150 MM ± 5MM
STRIP & TIN: 5 MM ± 1MM
MATERIAL: A. B. S. RESIN BLACK COLOR
SPRING: .6 MM 65C SPRING WIRE
DESCR.: FOR Three "AAA" CELLS



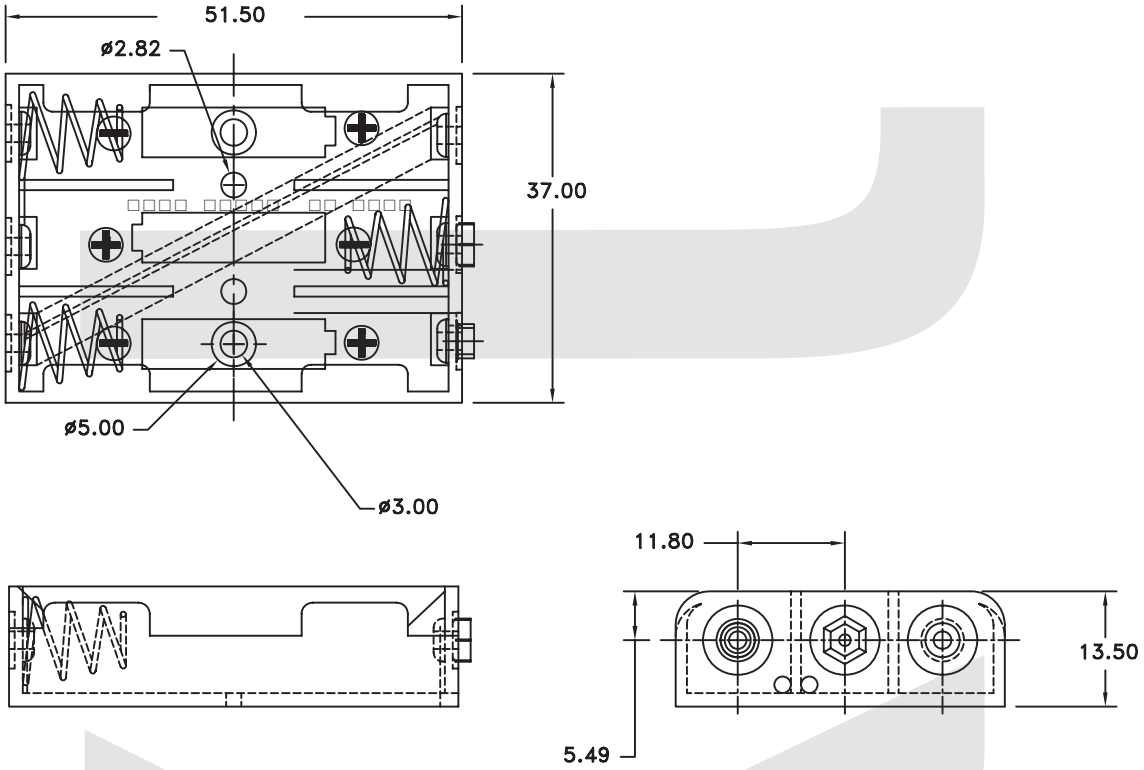

ORDER INFORMATION

Product NO.: KLS5-819-C

Part Number
Cell Box Series

TYPE:
A:With Soldered lug
B:With Wire L=15cm or other
C:With 6 Prong snap
D:With Pin

Cell Box Series

KLS5-819 UM-4 OR "AAA" Cell Box Series

WIRE: UL 1007, # 26 AWG
BLACK & RED: 150 MM ± 5MM
STRIP & TIN: 5 MM ± 1MM
MATERIAL: A. B. S. RESIN BLACK COLOR
SPRING: .6 MM 65C SPRING WIRE
DESCR.: FOR Three "AAA" CELLS



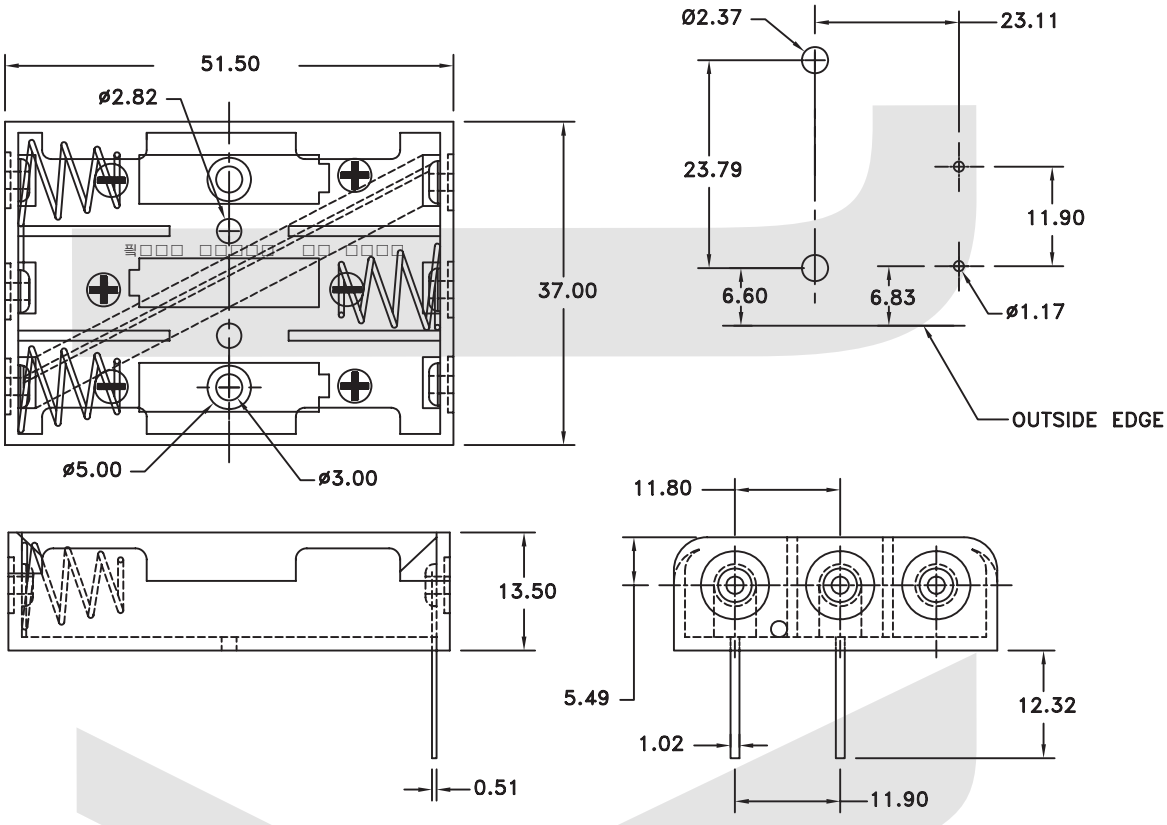

ORDER INFORMATION

Product NO.: KLS5-819-D

Part Number
Cell Box Series

TYPE:
A:With Soldered lug
B:With Wire L=15cm or other
C:With 6 Prong snap
D:With Pin

Cell Box Series

KLS5-820 UM-4 OR "AAA" Cell Box Series

WIRE: UL 1007, # 26 AWG
BLACK & RED: 150 MM ± 5MM
STRIP & TIN: 5 MM ± 1MM
MATERIAL: A. B. S. RESIN BLACK COLOR
SPRING: .6 MM 65C SPRING WIRE
DESCR.: FOR Four "AAA" CELLS



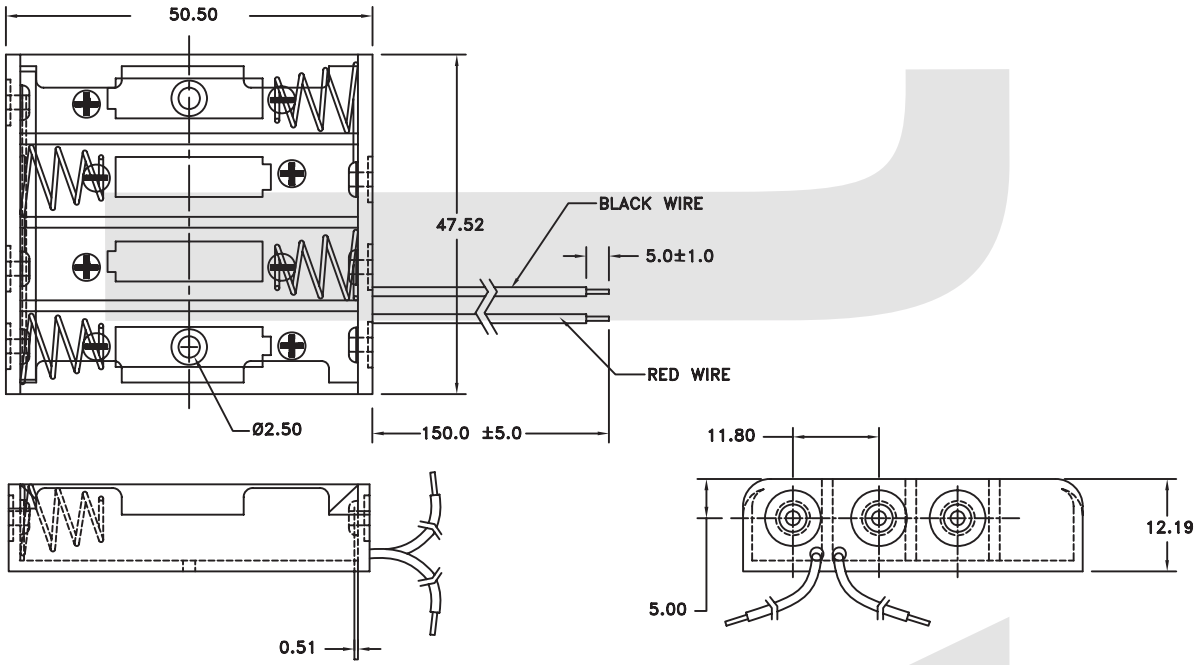

ORDER INFORMATION

Product NO.: KLS5-820-B

Part Number
Cell Box Series

TYPE:
A:With Soldered lug
B:With Wire L=15cm or other
C:With 6 Prong snap
D:With Pin

Cell Box Series

KLS5-820 UM-4 OR "AAA" Cell Box Series

WIRE: UL 1007, # 26 AWG
BLACK & RED: 150 MM ± 5MM
STRIP & TIN: 5 MM ± 1MM
MATERIAL: A. B. S. RESIN BLACK COLOR
SPRING: .6 MM 65C SPRING WIRE
DESCR.: FOR Four "AAA" CELLS



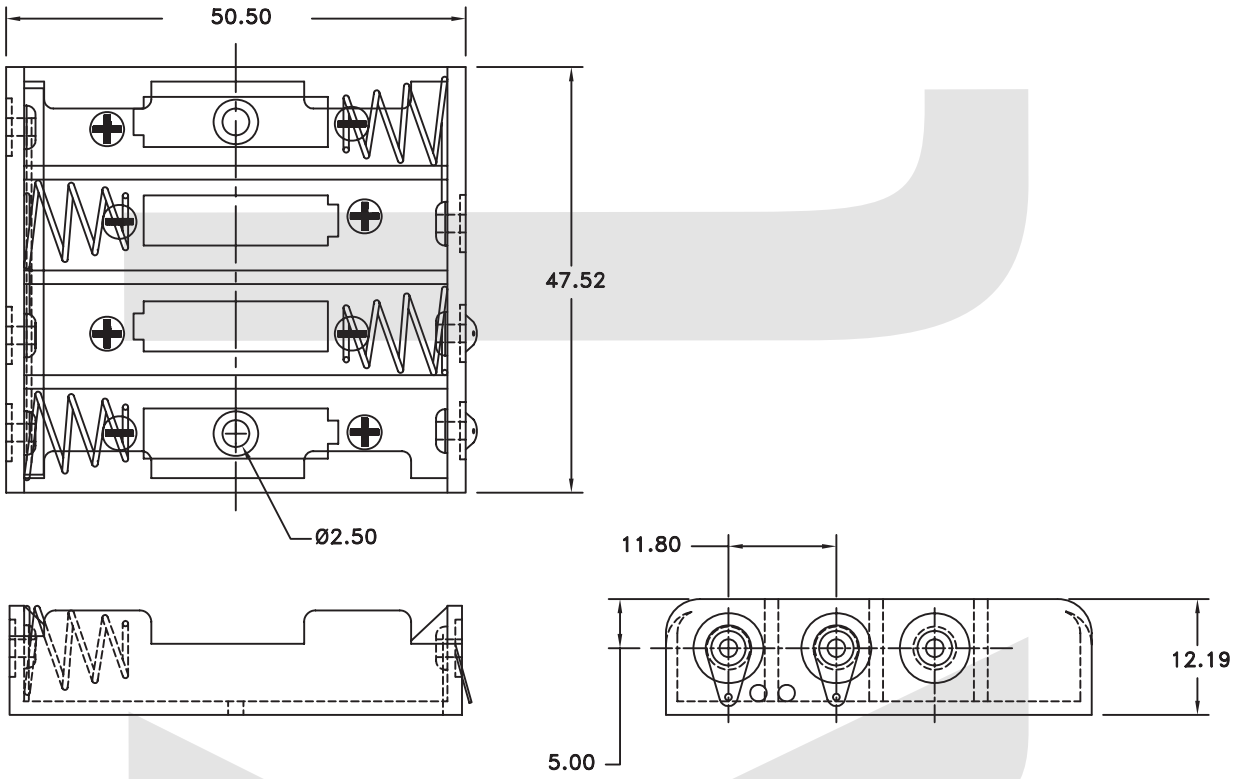

ORDER INFORMATION

Product NO.: KLS5-820-A

Part Number
Cell Box Series

TYPE:
A:With Soldered lug
B:With Wire L=15cm or other
C:With 6 Prong snap
D:With Pin

Cell Box Series

KLS5-820 UM-4 OR "AAA" Cell Box Series

WIRE: UL 1007, # 26 AWG
BLACK & RED: 150 MM ± 5MM
STRIP & TIN: 5 MM ± 1MM
MATERIAL: A. B. S. RESIN BLACK COLOR
SPRING: .6 MM 65C SPRING WIRE
DESCR.: FOR Four "AAA" CELLS



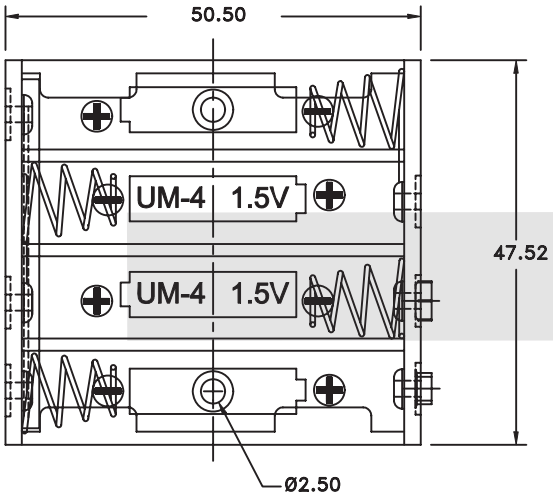

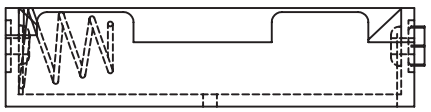

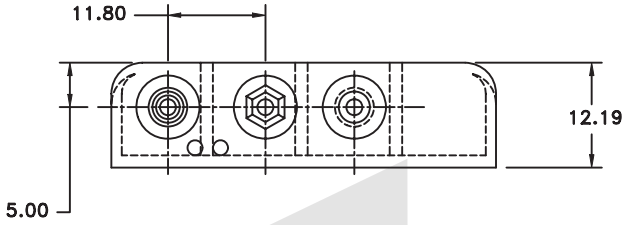

ORDER INFORMATION

Product NO.: KLS5-820-C

Part Number
Cell Box Series

TYPE:
A:With Soldered lug
B:With Wire L=15cm or other
C:With 6 Prong snap
D:With Pin

Cell Box Series

KLS5-820 UM-4 OR "AAA" Cell Box Series

WIRE: UL 1007, # 26 AWG
BLACK & RED: 150 MM ± 5MM
STRIP & TIN: 5 MM ± 1MM
MATERIAL: A. B. S. RESIN BLACK COLOR
SPRING: .6 MM 65C SPRING WIRE
DESCR.: FOR Four "AAA" CELLS



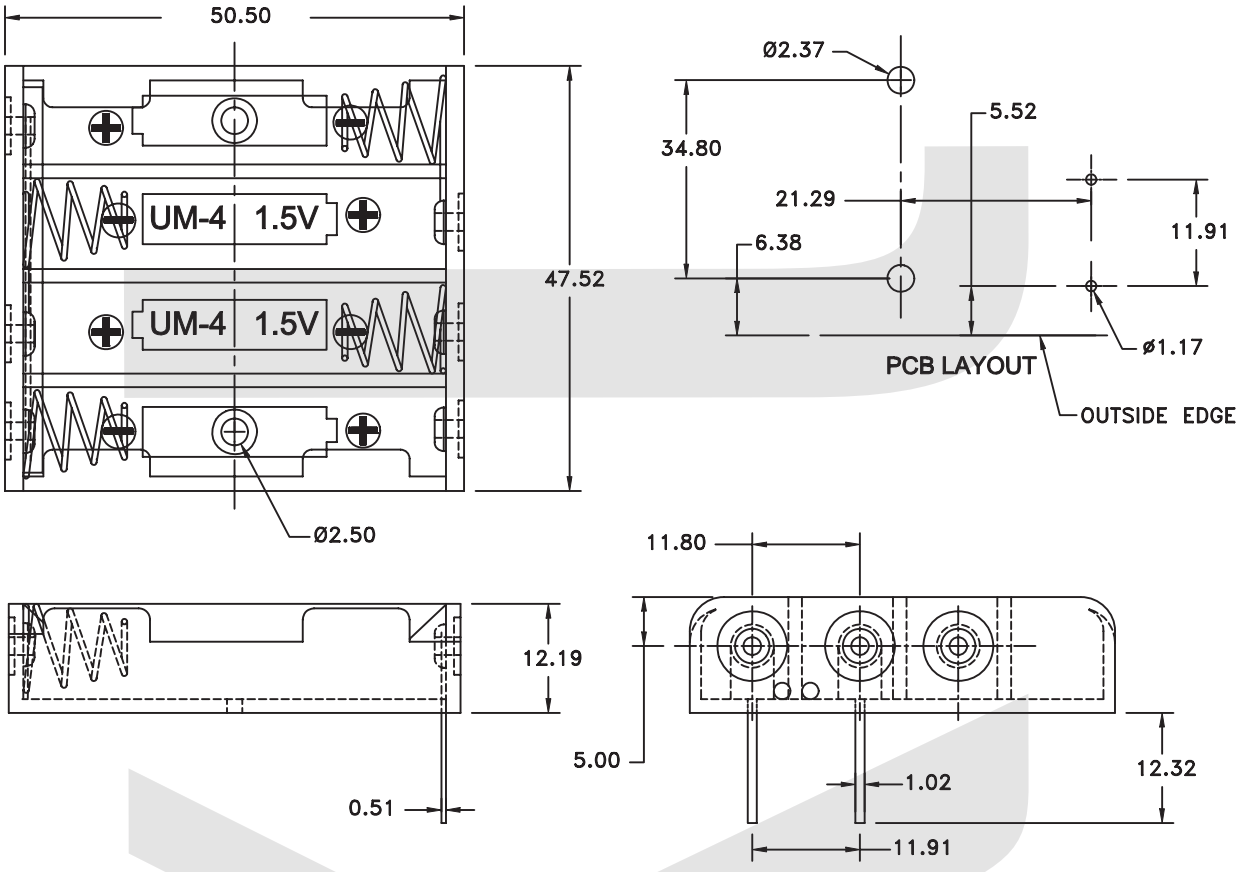

ORDER INFORMATION

Product NO.: KLS5-820-D

Part Number
Cell Box Series

TYPE:
A:With Soldered lug
B:With Wire L=15cm or other
C:With 6 Prong snap
D:With Pin

Cell Box Series

KLS5-821 UM-4 OR "AAA" Cell Box Series

WIRE: UL 1007, # 26 AWG
BLACK & RED: 150 MM ± 5MM
STRIP & TIN: 5 MM ± 1MM
MATERIAL: A. B. S. RESIN BLACK COLOR
SPRING: .6 MM 65C SPRING WIRE
DESCR.: FOR Four "AAA" CELLS

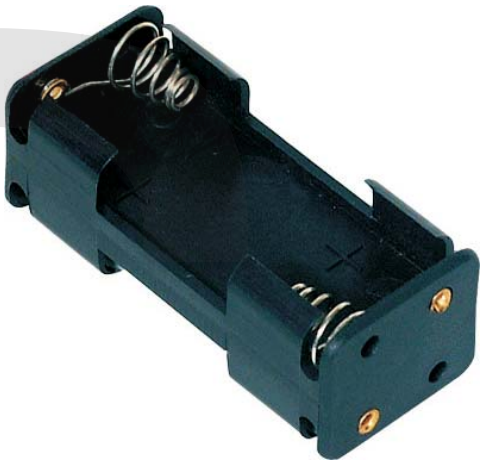

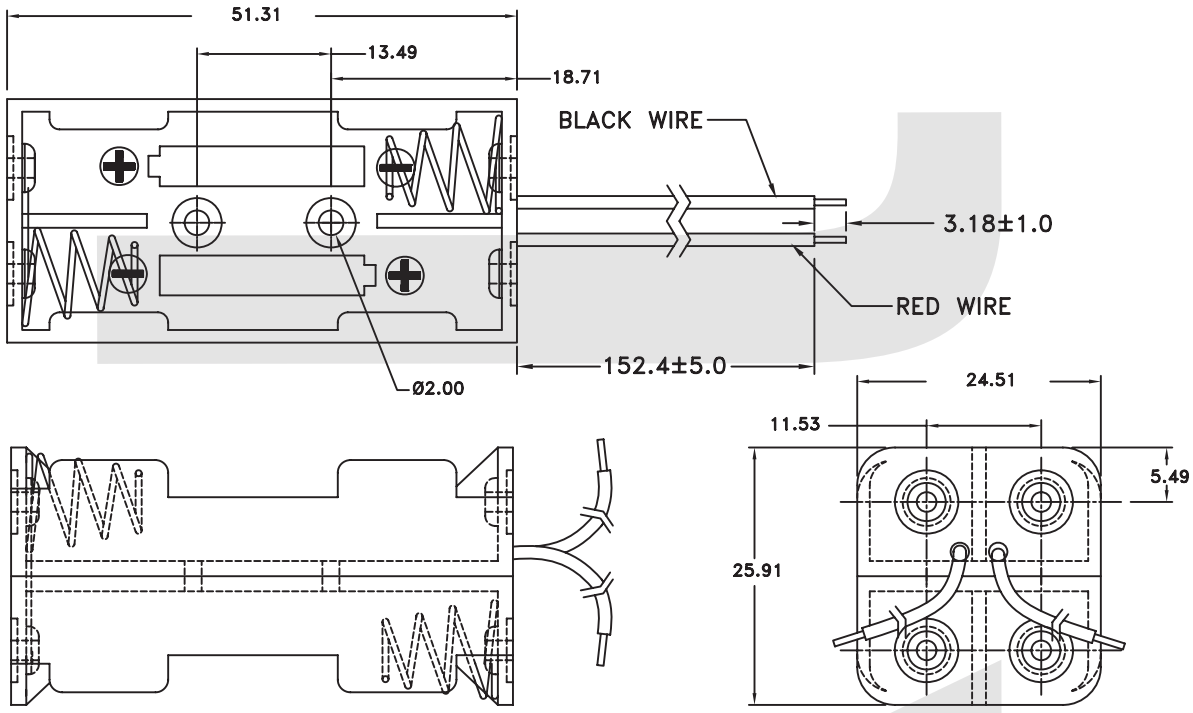

ORDER INFORMATION

Product NO.: KLS5-821-B

Part Number
Cell Box Series

TYPE:
A:With Soldered lug
B:With Wire L=15cm or other
C:With 6 Prong snap

Cell Box Series

KLS5-821 UM-4 OR "AAA" Cell Box Series

WIRE: UL 1007, # 26 AWG
BLACK & RED: 150 MM ± 5MM
STRIP & TIN: 5 MM ± 1MM
MATERIAL: A. B. S. RESIN BLACK COLOR
SPRING: .6 MM 65C SPRING WIRE
DESCR.: FOR Four "AAA" CELLS

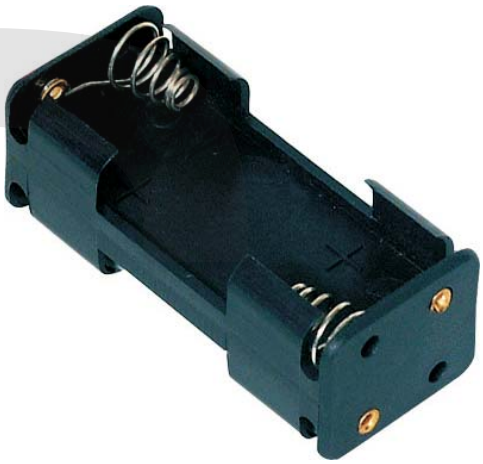

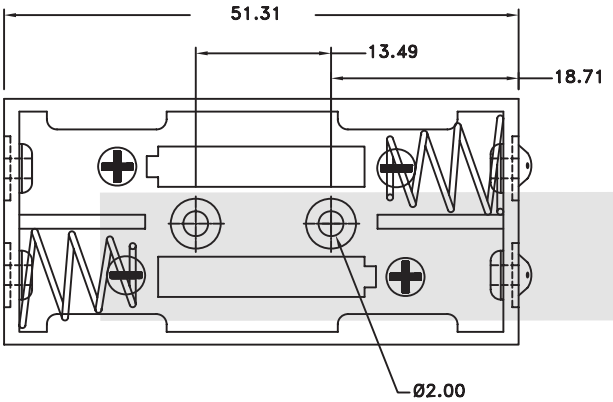

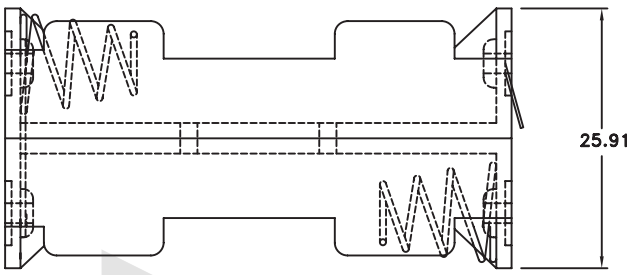

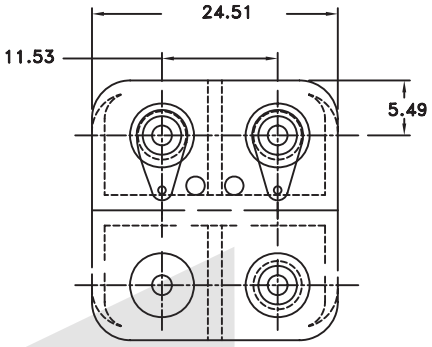

ORDER INFORMATION

Product NO.: KLS5-821-A

Part Number
Cell Box Series

TYPE:
A:With Soldered lug
B:With Wire L=15cm or other
C:With 6 Prong snap

Cell Box Series

KLS5-821 UM-4 OR "AAA" Cell Box Series

WIRE: UL 1007, # 26 AWG
BLACK & RED: 150 MM ± 5MM
STRIP & TIN: 5 MM ± 1MM
MATERIAL: A. B. S. RESIN BLACK COLOR
SPRING: .6 MM 65C SPRING WIRE
DESCR.: FOR Four "AAA" CELLS

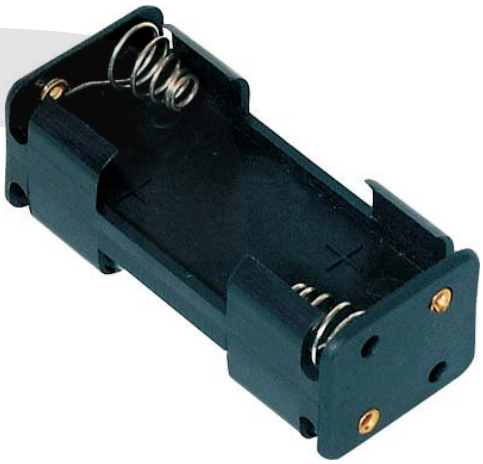

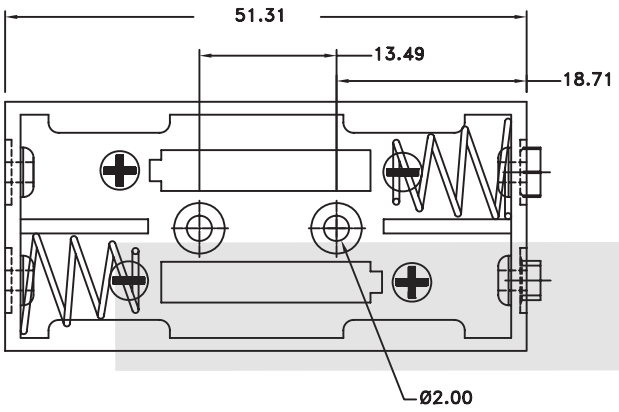

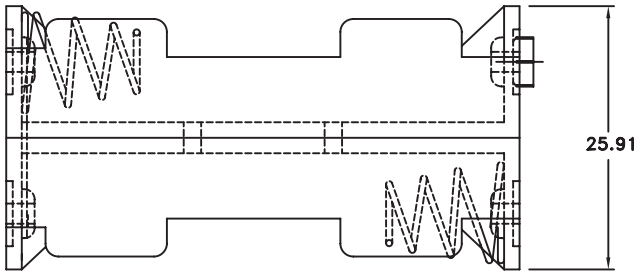

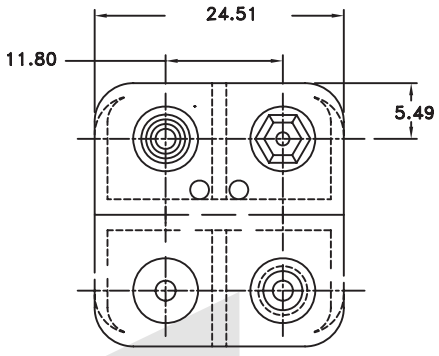

ORDER INFORMATION

Product NO.: KLS5-821-C

Part Number
Cell Box Series

TYPE:
A:With Soldered lug
B:With Wire L=15cm or other
C:With 6 Prong snap

Cell Box Series

KLS5-825 UM-4 OR "AAA" Cell Box Series

WIRE: UL 1007, # 26 AWG
BLACK & RED: 150 MM ± 5MM
STRIP & TIN: 5 MM ± 1MM
MATERIAL: A. B. S. RESIN BLACK COLOR
SPRING: .6 MM 65C SPRING WIRE
DESCR.: FOR Six "AAA" CELLS



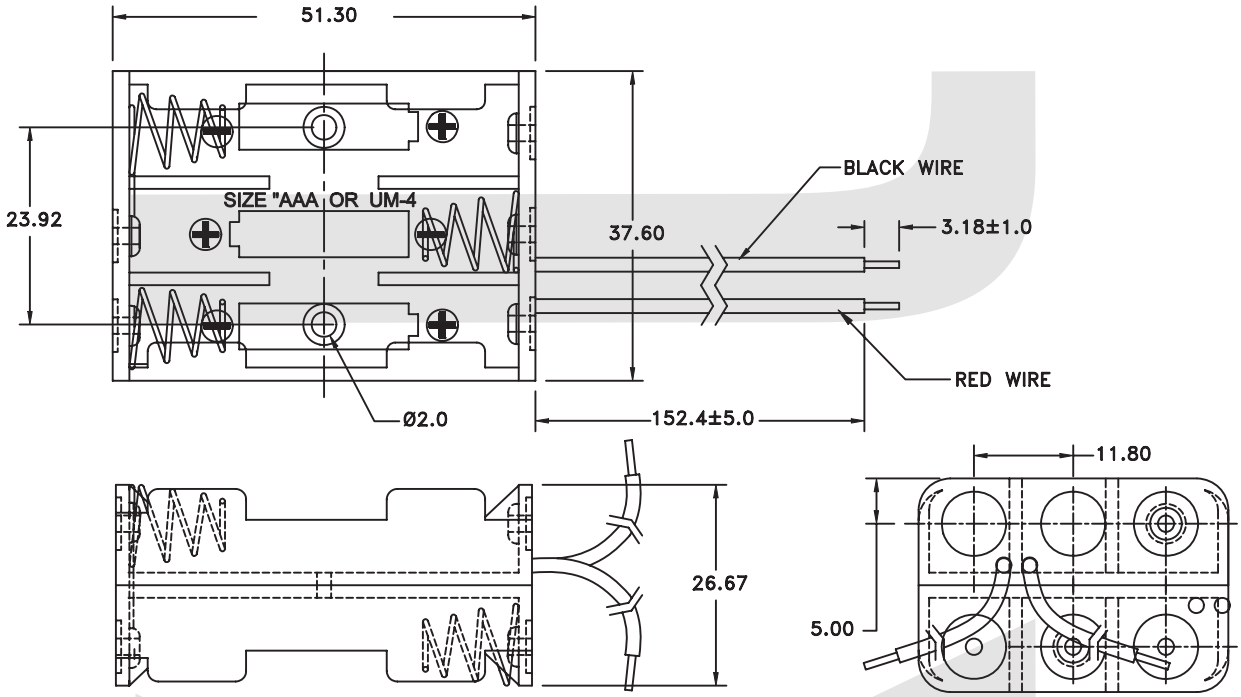

ORDER INFORMATION

Product NO.: KLS5-825-B

Part Number
Cell Box Series

TYPE:
A:With Soldered lug
B:With Wire L=15cm or other
C:With 6 Prong snap

Cell Box Series

KLS5-825 UM-4 OR "AAA" Cell Box Series

WIRE: UL 1007, # 26 AWG
BLACK & RED: 150 MM ± 5MM
STRIP & TIN: 5 MM ± 1MM
MATERIAL: A. B. S. RESIN BLACK COLOR
SPRING: .6 MM 65C SPRING WIRE
DESCR.: FOR Six "AAA" CELLS



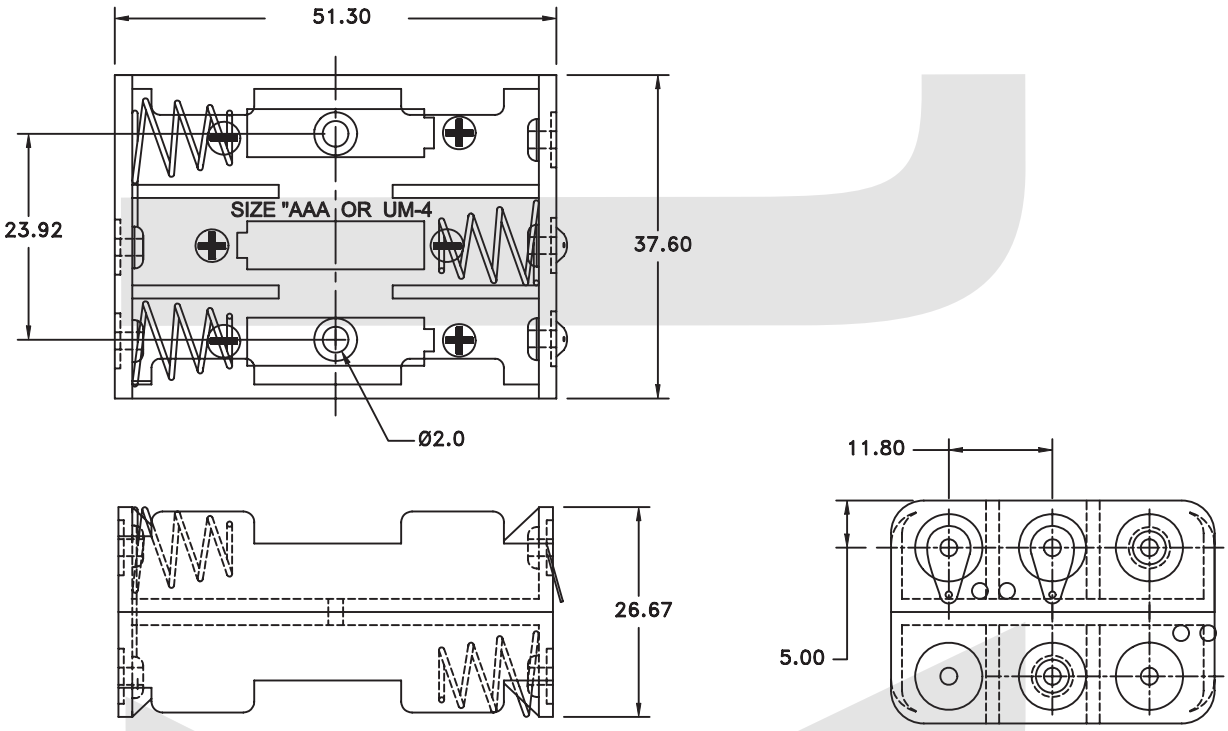

ORDER INFORMATION

Product NO.: KLS5-825-A

Part Number
Cell Box Series

TYPE:
A:With Soldered lug
B:With Wire L=15cm or other
C:With 6 Prong snap

Cell Box Series

KLS5-825 UM-4 OR "AAA" Cell Box Series

WIRE: UL 1007, # 26 AWG
BLACK & RED: 150 MM ± 5MM
STRIP & TIN: 5 MM ± 1MM
MATERIAL: A. B. S. RESIN BLACK COLOR
SPRING: .6 MM 65C SPRING WIRE
DESCR.: FOR Six "AAA" CELLS



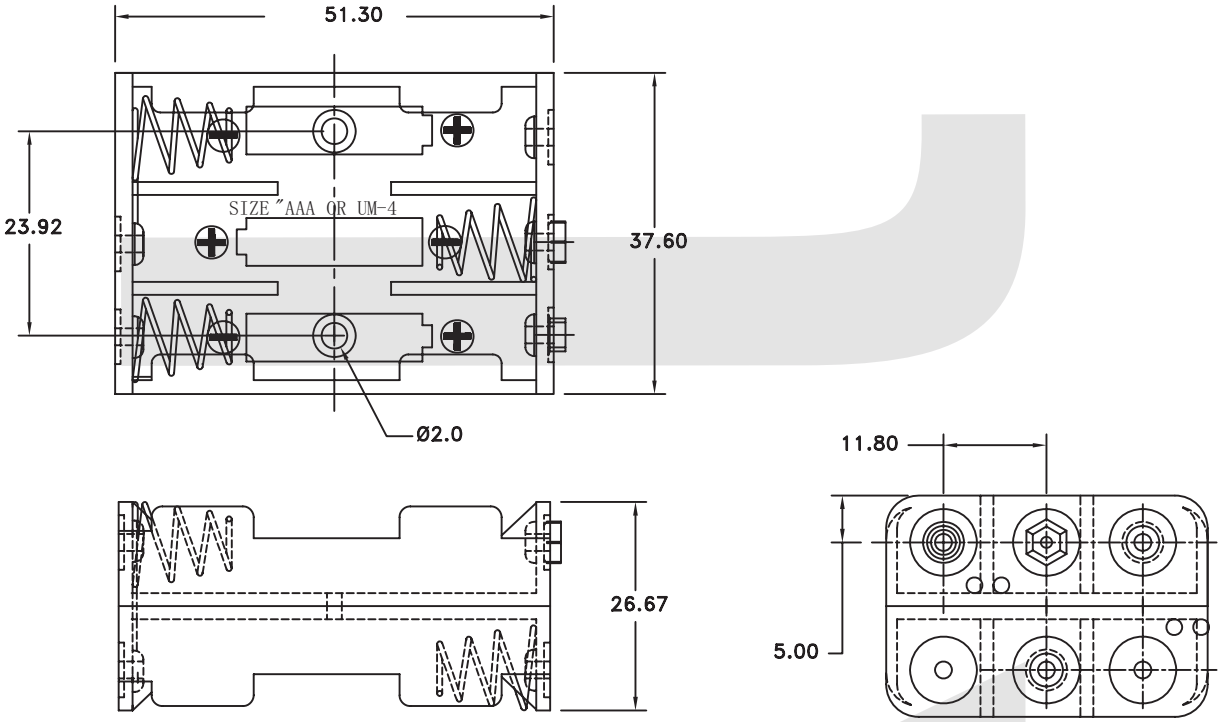

ORDER INFORMATION

Product NO.: KLS5-825-C

Part Number
Cell Box Series

TYPE:
A:With Soldered lug
B:With Wire L=15cm or other
C:With 6 Prong snap

Cell Box Series

KLS5-826 UM-4 OR "AAA" Cell Box Series

WIRE: UL 1007, # 26 AWG
BLACK & RED: 150 MM ± 5MM
STRIP & TIN: 5 MM ± 1MM
MATERIAL: A. B. S. RESIN BLACK COLOR
SPRING: .6 MM 65C SPRING WIRE
DESCR.: FOR Eight "AAA" CELLS



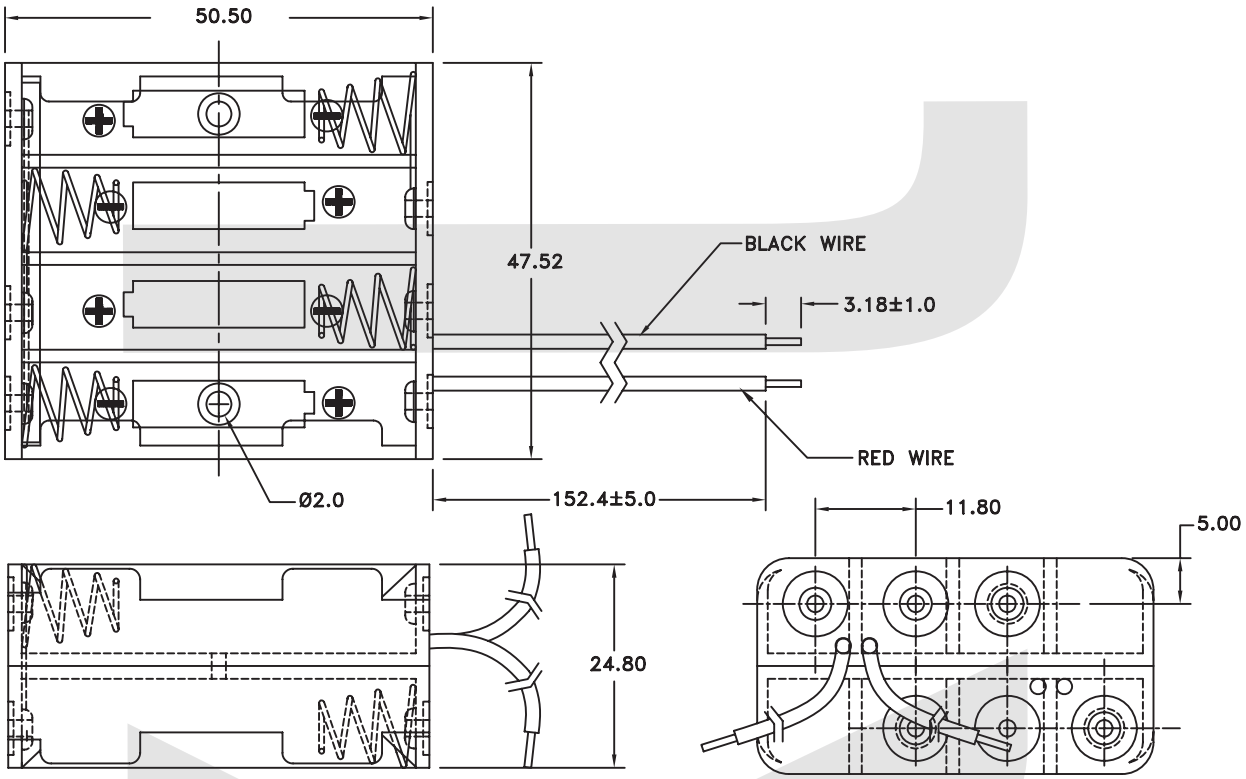

ORDER INFORMATION

Product NO.: KLS5-826-B

Part Number
Cell Box Series

TYPE:
A:With Soldered lug
B:With Wire L=15cm or other
C:With 6 Prong snap

Cell Box Series

KLS5-826 UM-4 OR "AAA" Cell Box Series

WIRE: UL 1007, # 26 AWG
BLACK & RED: 150 MM ± 5MM
STRIP & TIN: 5 MM ± 1MM
MATERIAL: A. B. S. RESIN BLACK COLOR
SPRING: .6 MM 65C SPRING WIRE
DESCR.: FOR Eight "AAA" CELLS



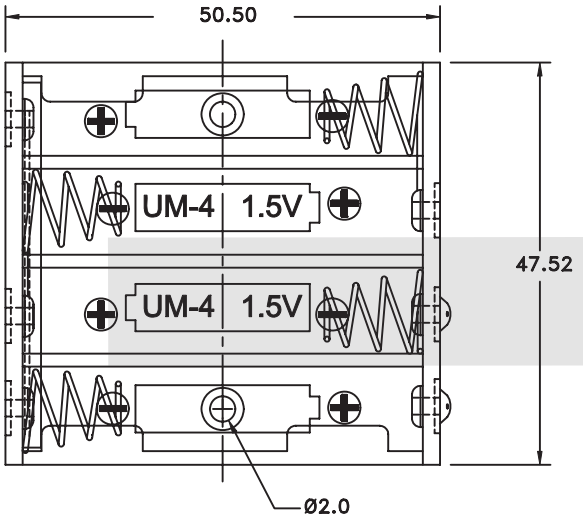

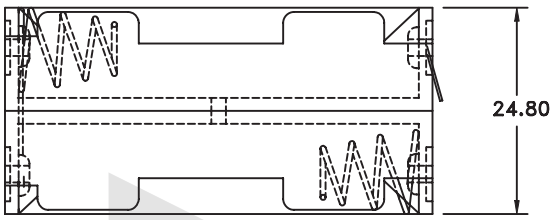

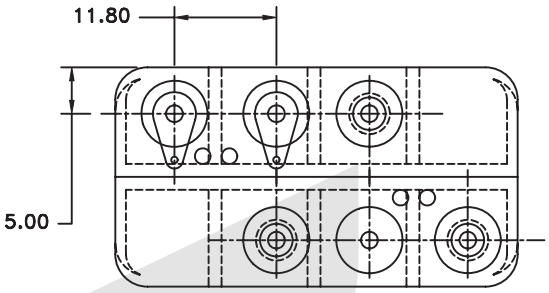

ORDER INFORMATION

Product NO.: KLS5-826-A

Part Number
Cell Box Series

TYPE:
A:With Soldered lug
B:With Wire L=15cm or other
C:With 6 Prong snap

Cell Box Series

KLS5-826 UM-4 OR "AAA" Cell Box Series

WIRE: UL 1007, # 26 AWG
BLACK & RED: 150 MM ± 5MM
STRIP & TIN: 5 MM ± 1MM
MATERIAL: A. B. S. RESIN BLACK COLOR
SPRING: .6 MM 65C SPRING WIRE
DESCR.: FOR Eight "AAA" CELLS



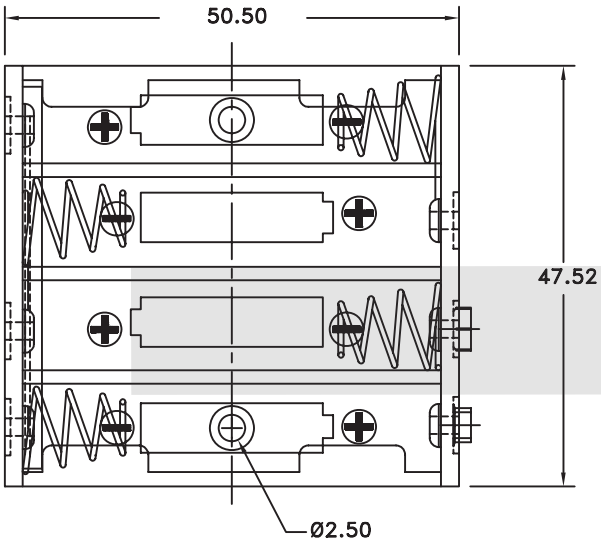

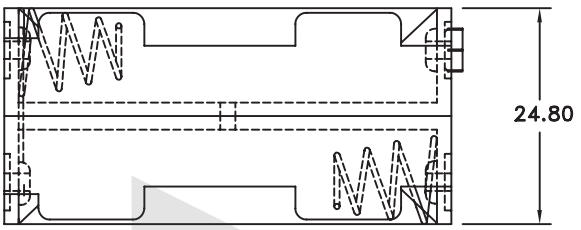

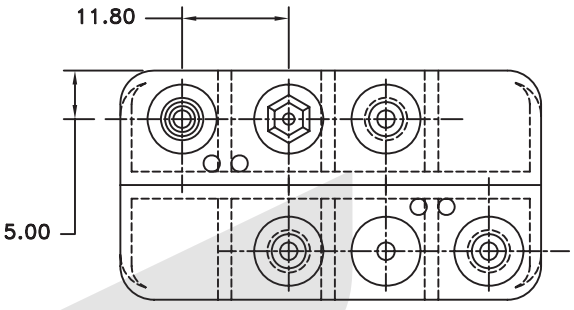

ORDER INFORMATION

Product NO.: KLS5-826-C

Part Number
Cell Box Series

TYPE:
A:With Soldered lug
B:With Wire L=15cm or other
C:With 6 Prong snap

Cell Box Series

KLS5-827 UM-4 OR "AAA"



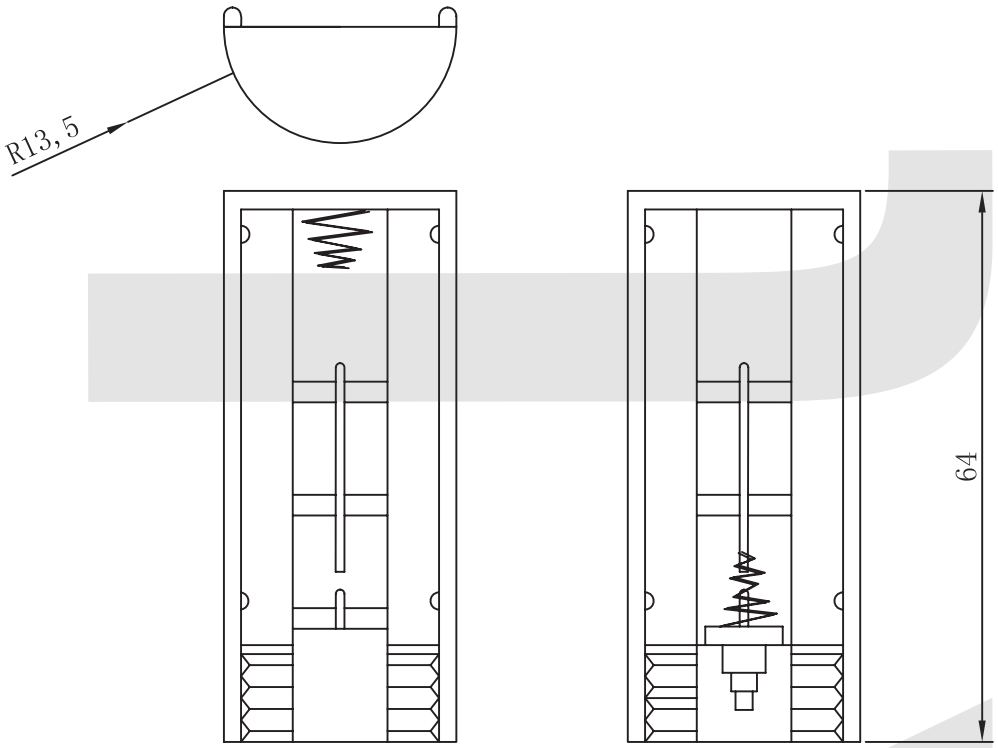

ORDER INFORMATION

Product NO.: KLS5-827-B

- KLS5-827: Part Number / Cell Box Series
- B: TYPE: B:With 15CM Wire

Cell Box Series

KLS5-828 UM-4 OR "AAA" Safety Battery Holder Series

WIRE: UL 1007, # 26 AWG
BLACK & RED: 150 MM ± 5MM
STRIP & TIN: 5 MM ± 1MM
MATERIAL: A. B. S. RESIN BLACK COLOR
SPRING: .6 MM 65C SPRING WIRE
DESCR.: FOR Two "AAA" CELLS
WITH COVER & SCREW
SERIES CONNECTION, 6 VOLTS



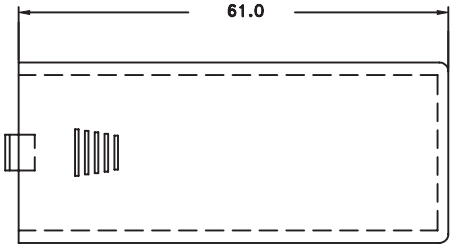

TOP COVER

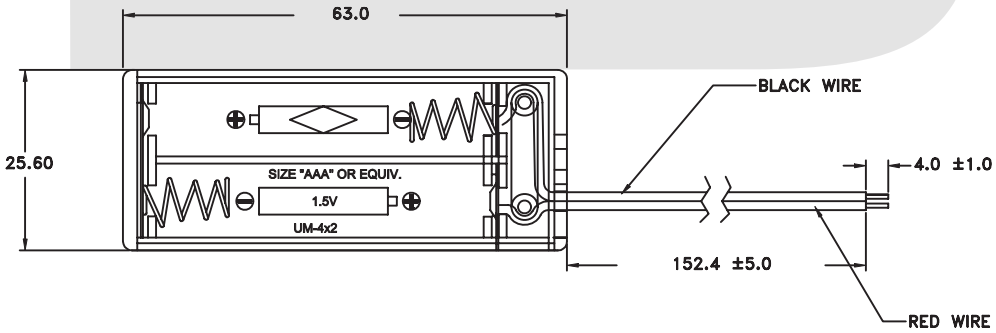



BOTTOM-HOUSING

ORDER INFORMATION

Product NO.: KLS5-828-B

Part Number
Cell Box Series

TYPE:
B:With 15CM Wire And with switch

Cell Box Series

KLS5-710 UM-3 OR "AA" Cell Box Series

WIRE: UL 1007, # 26 AWG
BLACK & RED: 150 MM ± 5MM
STRIP & TIN: 5 MM ± 1MM
MATERIAL: A. B. S. RESIN BLACK COLOR
SPRING: .6 MM 65C SPRING WIRE
DESCR.: FOR ONE "AA" CELLS

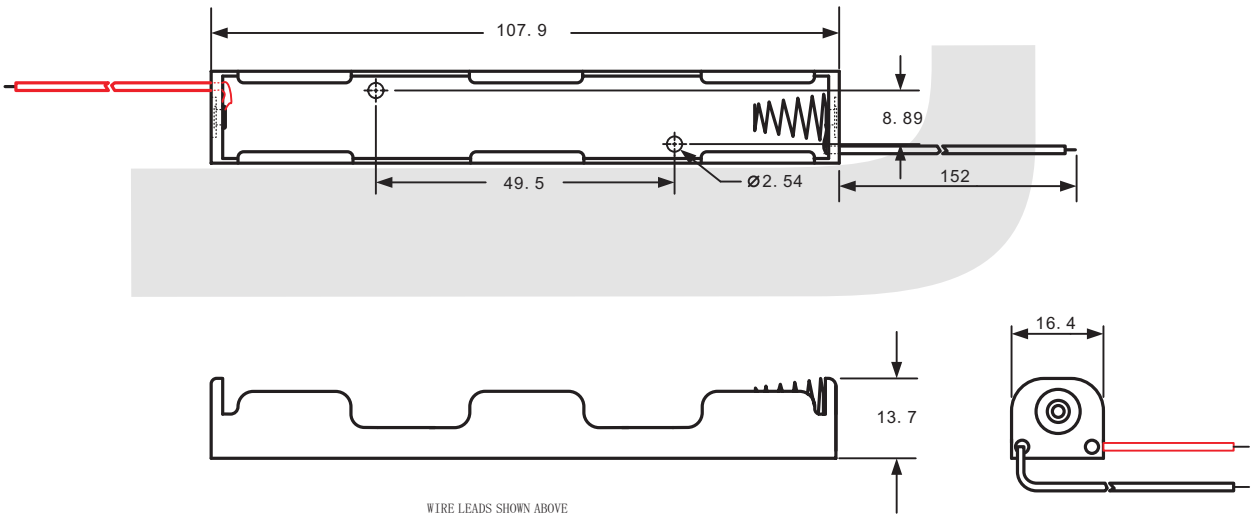

ORDER INFORMATION

Product NO.: KLS5-710-B

Part Number
Cell Box Series

TYPE:
A:With Soldered lug
B:With Wire L=15cm or other
D:With Pin

Cell Box Series

KLS5-710 UM-3 OR "AA" Cell Box Series

WIRE: UL 1007, # 26 AWG
BLACK & RED: 150 MM ± 5MM
STRIP & TIN: 5 MM ± 1MM
MATERIAL: A. B. S. RESIN BLACK COLOR
SPRING: .6 MM 65C SPRING WIRE
DESCR.: FOR ONE "AA" CELLS



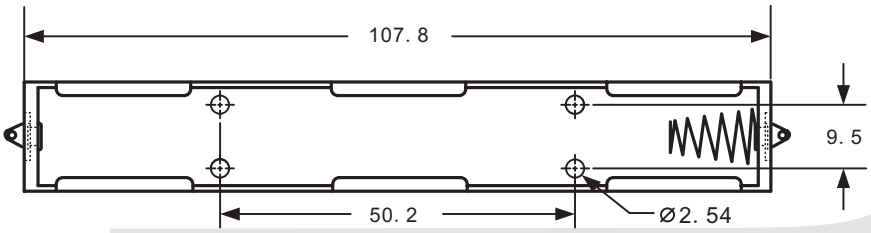

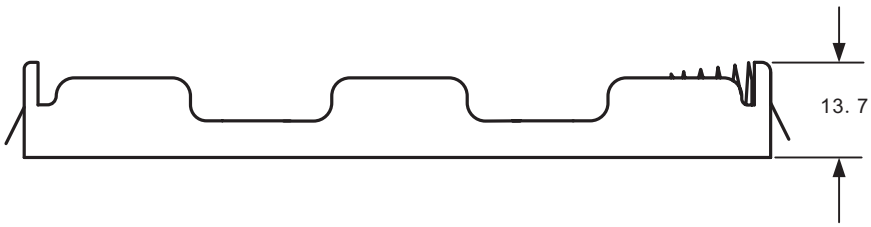

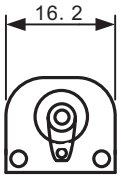

ORDER INFORMATION

Product NO.: KLS5-710-A

Part Number
Cell Box Series

TYPE:
A:With Soldered lug
B:With Wire L=15cm or other
D:With Pin

Cell Box Series

KLS5-710 UM-3 OR "AA" Cell Box Series

WIRE: UL 1007, # 26 AWG
BLACK & RED: 150 MM ± 5MM
STRIP & TIN: 5 MM ± 1MM
MATERIAL: A. B. S. RESIN BLACK COLOR
SPRING: .6 MM 65C SPRING WIRE
DESCR.: FOR ONE "AA" CELLS

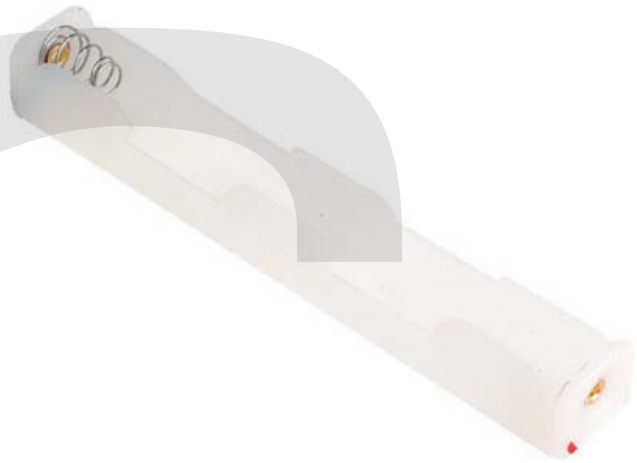

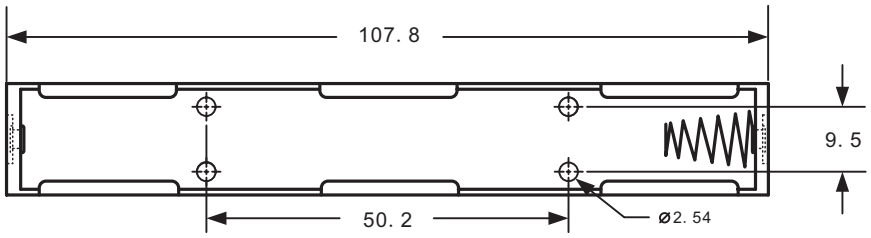

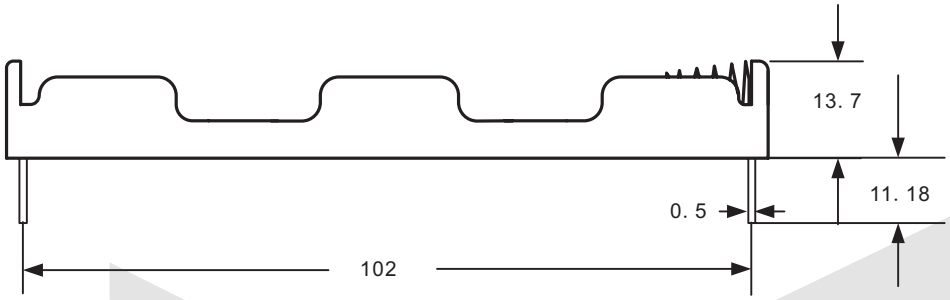

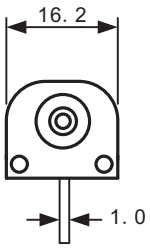

ORDER INFORMATION

Product NO.: KLS5-710-D

Part Number
Cell Box Series

TYPE:
A:With Soldered lug
B:With Wire L=15cm or other
D:With Pin

Cell Box Series

KLS5-801 UM-3 OR "AA" Cell Box Series

WIRE: UL 1007, # 26 AWG
BLACK & RED: 150 MM ± 5MM
STRIP & TIN: 5 MM ± 1MM
MATERIAL: A. B. S. RESIN BLACK COLOR
SPRING: .6 MM 65C SPRING WIRE
DESCR.: FOR ONE "AA" CELLS



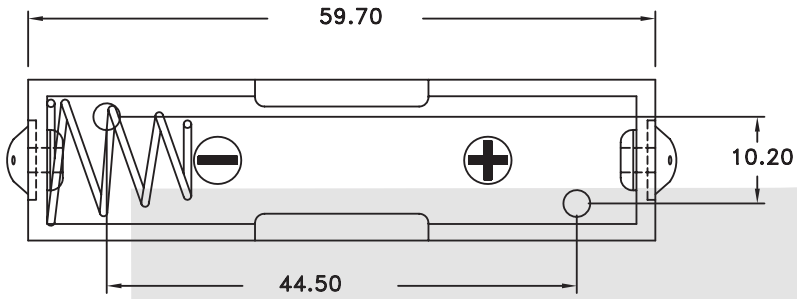

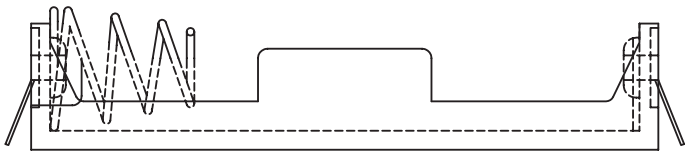

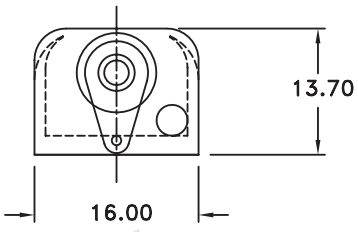

ORDER INFORMATION

Product NO.: KLS5-801-A

Part Number
Cell Box Series

TYPE:
A:With Soldered lug
B:With Wire L=15cm or other
D:With pin

Cell Box Series

KLS5-801 UM-3 OR "AA" Cell Box Series

WIRE: UL 1007, # 26 AWG
BLACK & RED: 150 MM ± 5MM
STRIP & TIN: 5 MM ± 1MM
MATERIAL: A. B. S. RESIN BLACK COLOR
SPRING: .6 MM 65C SPRING WIRE
DESCR.: FOR ONE "AA" CELLS



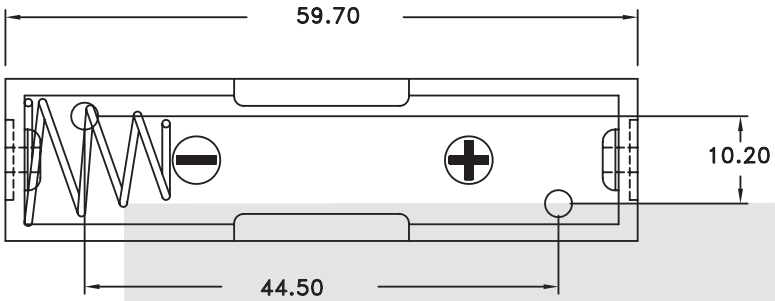

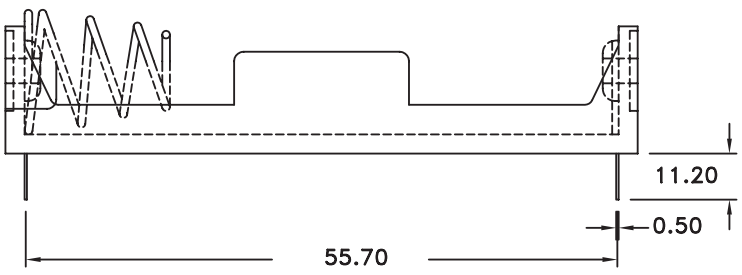

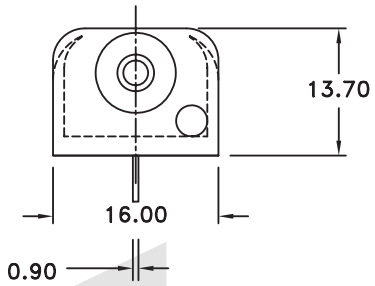

ORDER INFORMATION

Product NO.: KLS5-801-D

Part Number
Cell Box Series

TYPE:
A:With Soldered lug
B:With Wire L=15cm or other
D:With pin

Cell Box Series

KLS5-801 UM-3 OR "AA" Cell Box Series

WIRE: UL 1007, # 26 AWG
BLACK & RED: 150 MM ± 5MM
STRIP & TIN: 5 MM ± 1MM
MATERIAL: A. B. S. RESIN BLACK COLOR
SPRING: .6 MM 65C SPRING WIRE
DESCR.: FOR ONE "AA" CELLS



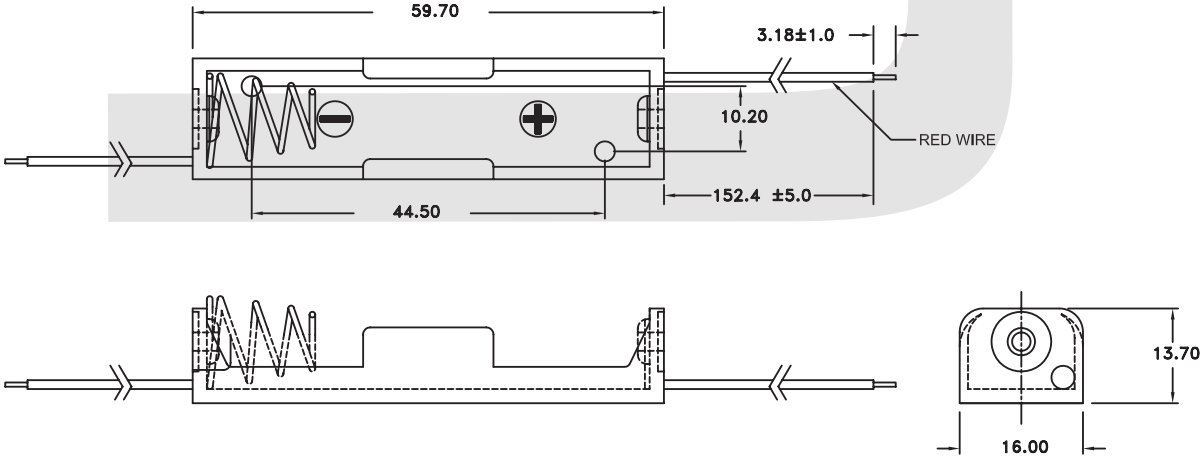

ORDER INFORMATION

Product NO.: KLS5-801-B

Part Number
Cell Box Series

TYPE:
A:With Soldered lug
B:With Wire L=15cm or other
D:With pin

Cell Box Series

KLS5-802 UM-3 OR "AA" Cell Box Series

Material

1、Plastic: PP
2、Spring: Carbon steel Nickel plated



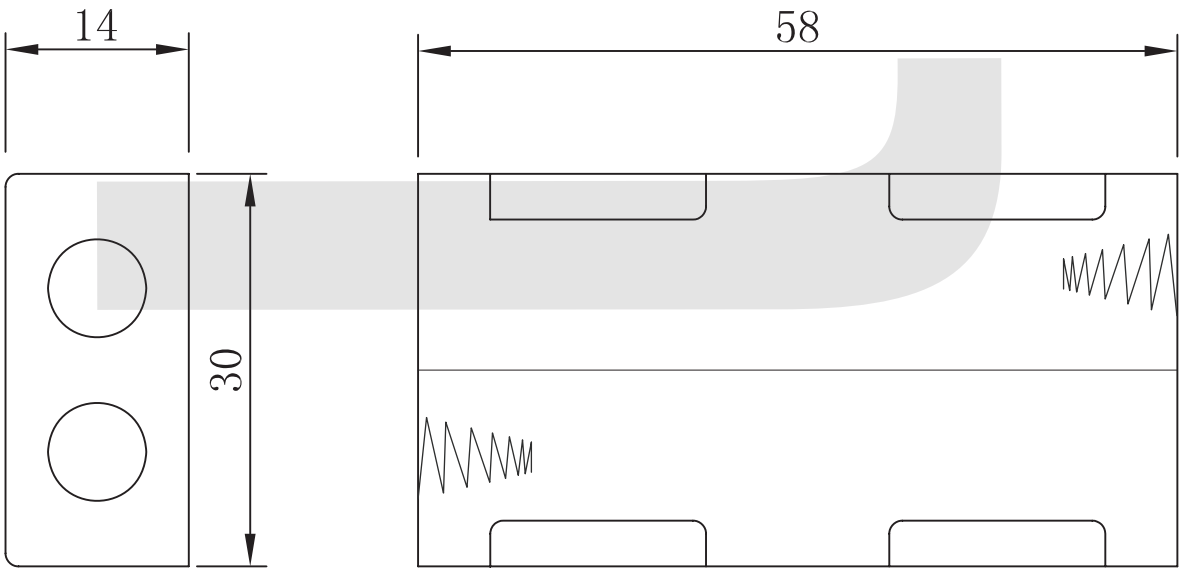

ORDER INFORMATION

Product NO.: KLS5-802-B

Part Number
Cell Box Series

TYPE:
A:With Soldered lug
B:With Wire L=15cm or other
C:With 6 Prong snap
D:With pin

Cell Box Series

KLS5-803 UM-3 OR "AA" Cell Box Series

WIRE: UL 1007, # 26 AWG
BLACK & RED: 150 MM ± 5MM
STRIP & TIN: 5 MM ± 1MM
MATERIAL: A. B. S. RESIN BLACK COLOR
SPRING: .6 MM 65C SPRING WIRE
DESCR.: FOR ONE "AA" CELLS



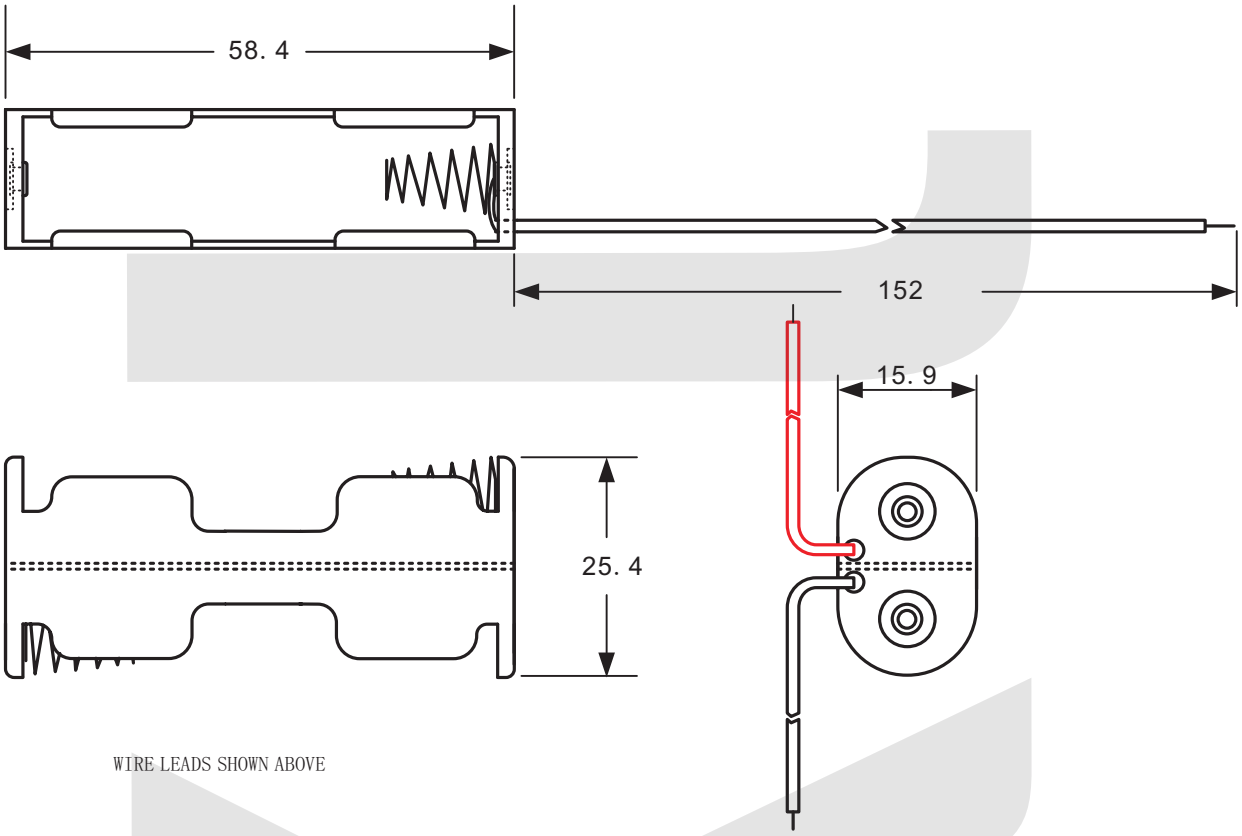

WIRE LEADS SHOWN ABOVE

ORDER INFORMATION

Product NO.: KLS5-803-B

Part Number
Cell Box Series

TYPE:
A:With Soldered lug
B:With Wire L=15cm or other
C:With 6 Prong snap

Cell Box Series

KLS5-803 UM-3 OR "AA" Cell Box Series

WIRE: UL 1007, # 26 AWG
BLACK & RED: 150 MM ± 5MM
STRIP & TIN: 5 MM ± 1MM
MATERIAL: A. B. S. RESIN BLACK COLOR
SPRING: .6 MM 65C SPRING WIRE
DESCR.: FOR ONE "AA" CELLS



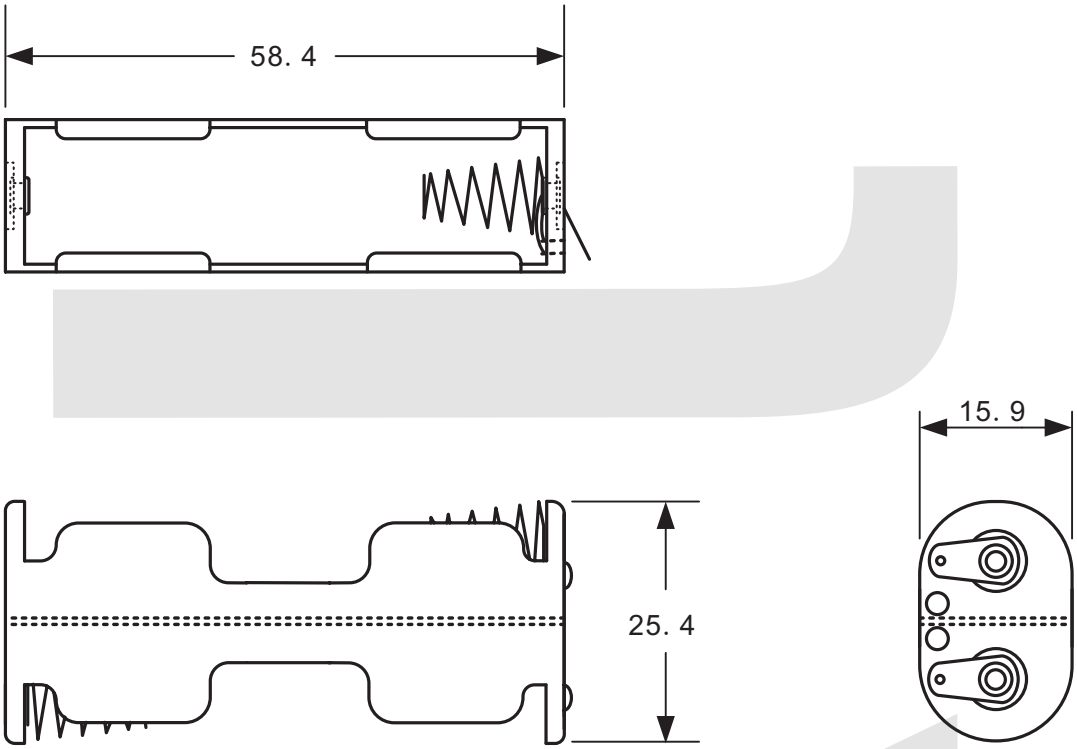

WIRE LEADS SHOWN ABOVE

ORDER INFORMATION

Product NO.: KLS5-803-A

Part Number
Cell Box Series

TYPE:
A:With Soldered lug
B:With Wire L=15cm or other
C:With 6 Prong snap

Cell Box Series

KLS5-803 UM-3 OR "AA" Cell Box Series

WIRE: UL 1007, # 26 AWG
BLACK & RED: 150 MM ± 5MM
STRIP & TIN: 5 MM ± 1MM
MATERIAL: A. B. S. RESIN BLACK COLOR
SPRING: .6 MM 65C SPRING WIRE
DESCR.: FOR ONE "AA" CELLS



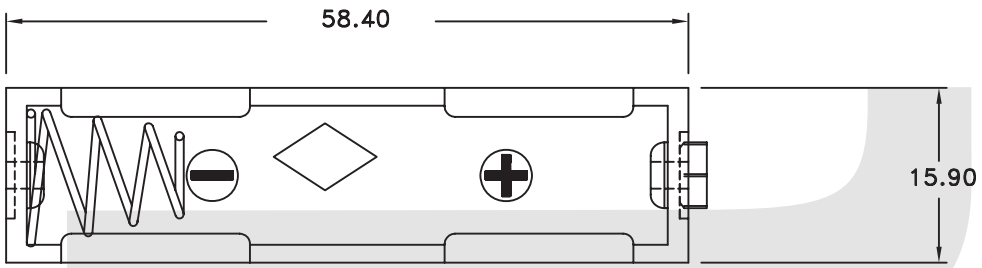

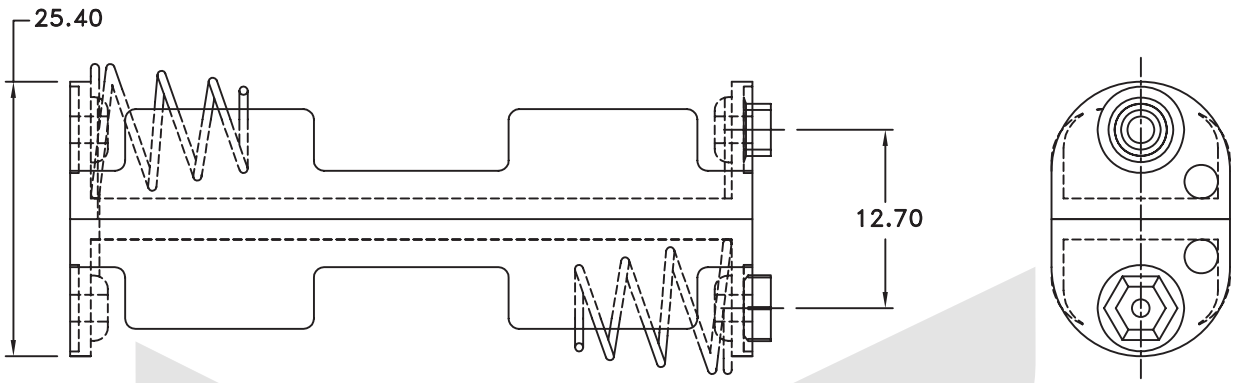

ORDER INFORMATION

Product NO.: KLS5-803-C

Part Number
Cell Box Series

TYPE:
A:With Soldered lug
B:With Wire L=15cm or other
C:With 6 Prong snap

Cell Box Series

KLS5-805 UM-3 OR "AA" Cell Box Series

WIRE: UL 1007, # 26 AWG
BLACK & RED: 150 MM 5MM
STRIP & TIN: 5 MM 1MM
MATERIAL: A. B. S. RESIN, BLACK COLOR
SPRING: .6 MM 65C SPRING WIRE
DESCR: FOR TWO "AA" CELLS, ON-OFF Sliding Switch
WITH COVER & SCREW
SERIES CONNECTION, 3 VOLTS



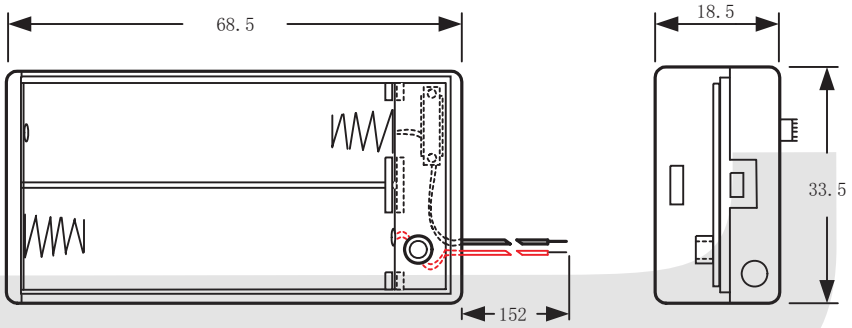

HOLDER END VIEW

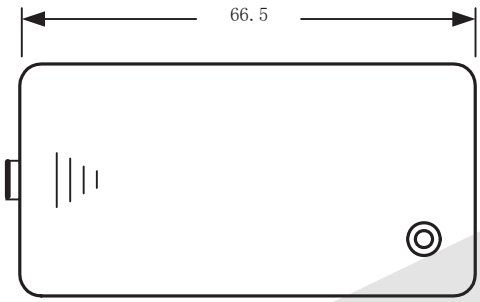

COVER

ORDER INFORMATION

Product NO.: KLS5-805-B

Part Number
Cell Box Series

TYPE:
B:With Wire And with switch L=15cm or other

Cell Box Series

KLS5-806 UM-3 OR "AA" Cell Box Series

WIRE: UL 1007, # 26 AWG
BLACK & RED: 150 MM ± 5MM
STRIP & TIN: 5 MM ± 1MM
MATERIAL: A. B. S. RESIN BLACK COLOR
SPRING: .6 MM 65C SPRING WIRE
DESCR.: FOR ONE "AA" CELLS



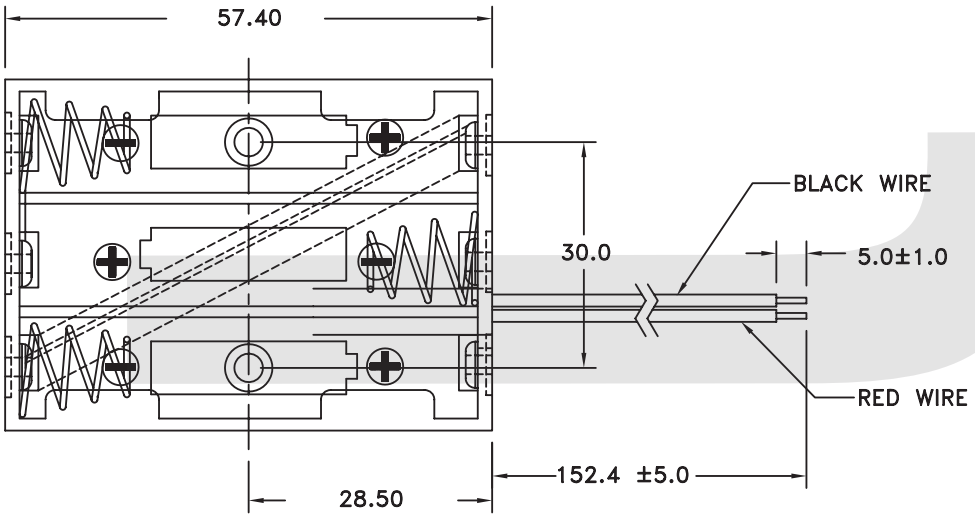



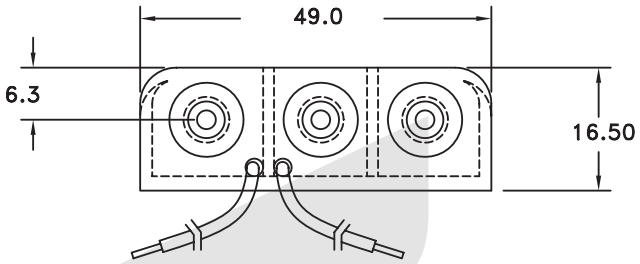

ORDER INFORMATION

Product NO.: KLS5-806-B

Part Number
Cell Box Series

TYPE:
A:With Soldered lug
B:With Wire L=15cm or other
C:With 6 Prong
D:With Pin

Cell Box Series

KLS5-806 UM-3 OR "AA" Cell Box Series

WIRE: UL 1007, # 26 AWG
BLACK & RED: 150 MM ± 5MM
STRIP & TIN: 5 MM ± 1MM
MATERIAL: A. B. S. RESIN BLACK COLOR
SPRING: .6 MM 65C SPRING WIRE
DESCR.: FOR ONE "AA" CELLS



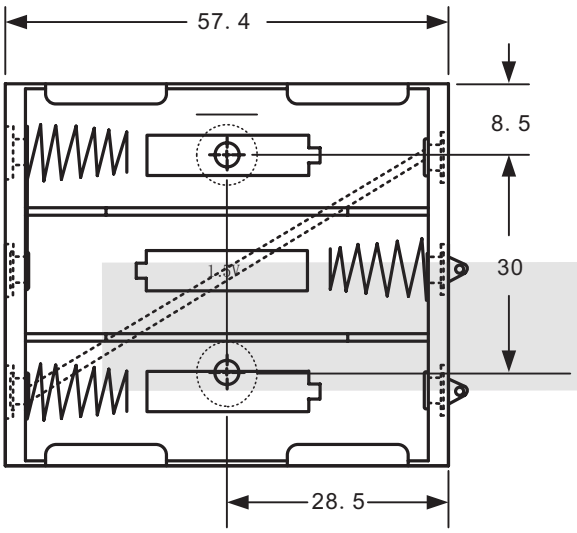

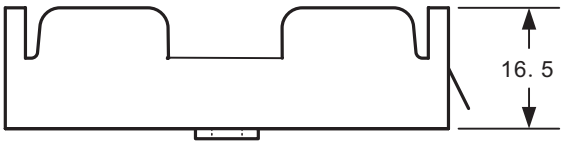

SOLDER LUGS SHOWN ABOVE

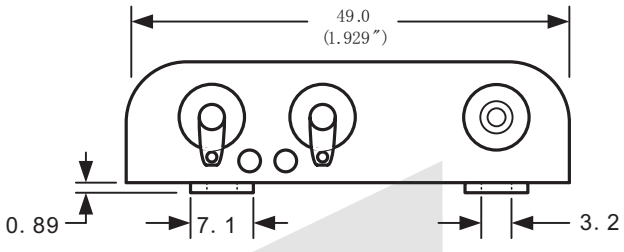

ORDER INFORMATION

Product NO.: KLS5-806-A

Part Number
Cell Box Series

TYPE:
A:With Soldered lug
B:With Wire L=15cm or other
C:With 6 Prong
D:With Pin

Cell Box Series

KLS5-806 UM-3 OR "AA" Cell Box Series

WIRE: UL 1007, # 26 AWG
BLACK & RED: 150 MM ± 5MM
STRIP & TIN: 5 MM ± 1MM
MATERIAL: A. B. S. RESIN BLACK COLOR
SPRING: .6 MM 65C SPRING WIRE
DESCR.: FOR ONE "AA" CELLS



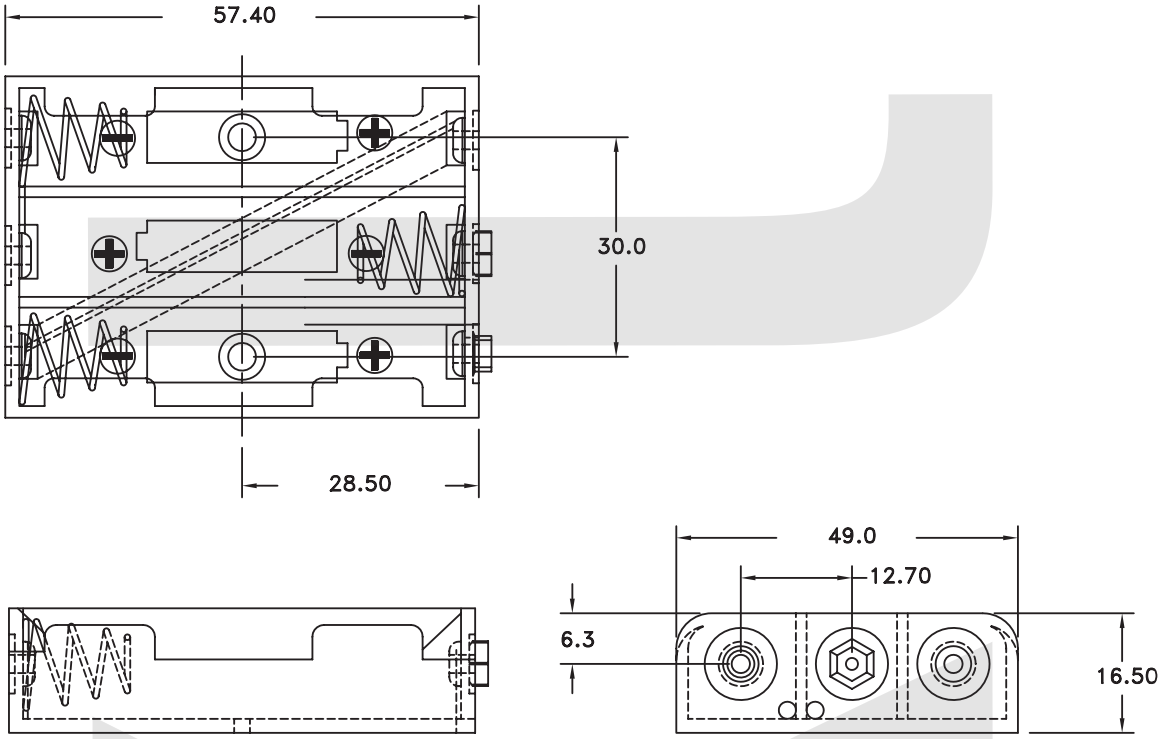

ORDER INFORMATION

Product NO.: KLS5-806-C

Part Number
Cell Box Series

TYPE:
A:With Soldered lug
B:With Wire L=15cm or other
C:With 6 Prong snap
D:With Pin

Cell Box Series

KLS5-806 UM-3 OR "AA" Cell Box Series

WIRE: UL 1007, # 26 AWG
BLACK & RED: 150 MM ± 5MM
STRIP & TIN: 5 MM ± 1MM
MATERIAL: A. B. S. RESIN BLACK COLOR
SPRING: .6 MM 65C SPRING WIRE
DESCR.: FOR ONE "AA" CELLS



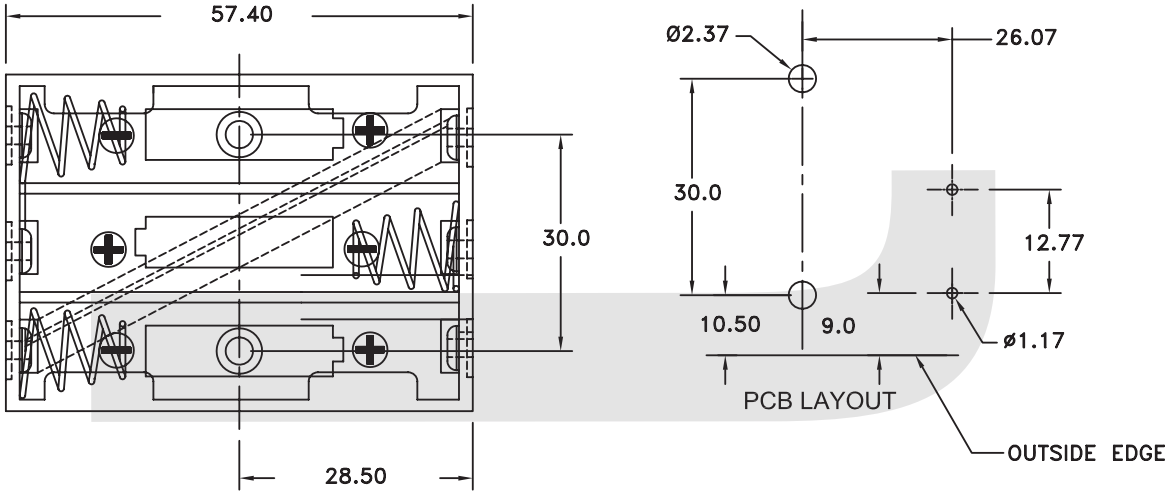

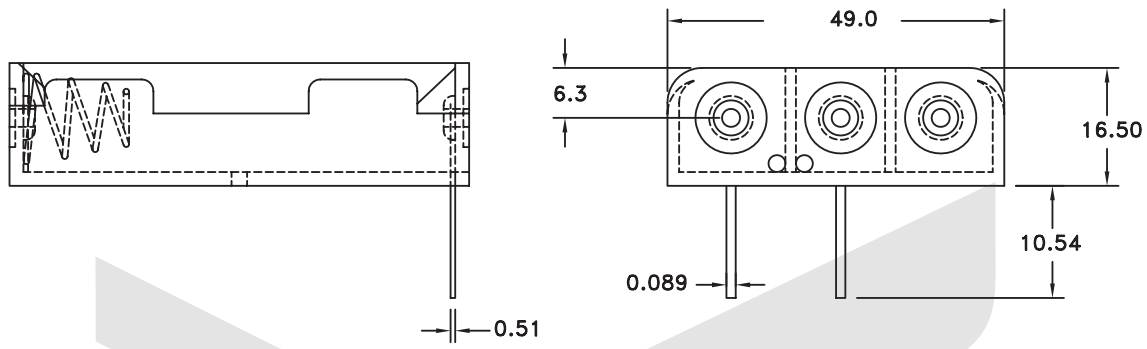

ORDER INFORMATION

Product NO.: KLS5-806-D

Part Number
Cell Box Series

TYPE:
A:With Soldered lug
B:With Wire L=15cm or other
C:With 6 Prong snap
D:With Pin

Cell Box Series

KLS5-808 UM-3 OR "AA" Safety Battery Holder Series

WIRE: UL 1007, # 26 AWG
BLACK & RED: 150 MM ± 5MM
STRIP & TIN: 5 MM ± 1MM
MATERIAL: A. B. S. RESIN, BLACK COLOR
SPRING: .6 MM 65C SPRING WIRE
DESCR.: FOR FOUR "AA" CELLS
WITH COVER & SCREW
SERIES CONNECTION, 6 VOLTS



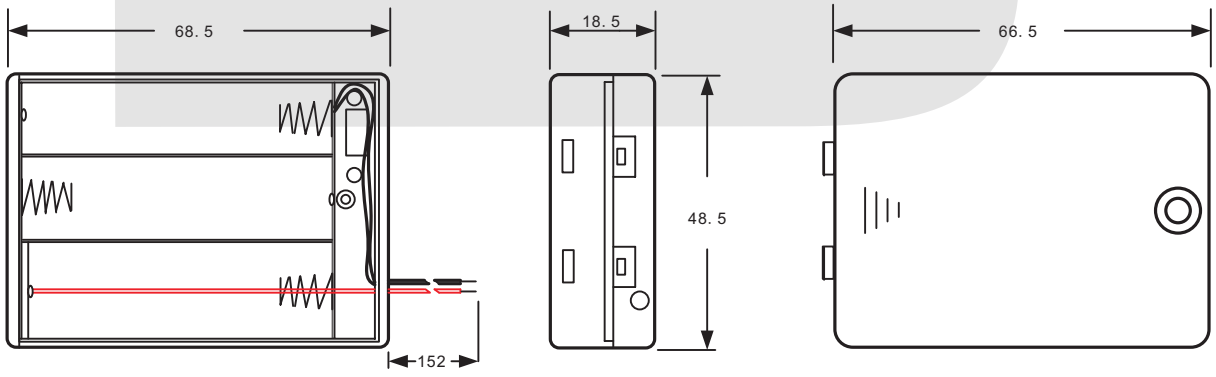

Holder　　END VIEW　　Cover

ORDER INFORMATION

Product NO.: KLS5-808-B

Part Number
Safety Battery Holder Series

TYPE:
B:With Wire And with switch L=15cm or other

Cell Box Series

KLS5-809 UM-3 OR "AA" Cell Box Series

WIRE: UL 1007, # 26 AWG
BLACK & RED: 150 MM ± 5MM
STRIP & TIN: 5 MM ± 1MM
MATERIAL: A. B. S. RESIN BLACK COLOR
SPRING: .6 MM 65C SPRING WIRE
DESCR.: FOR ONE "AA" CELLS



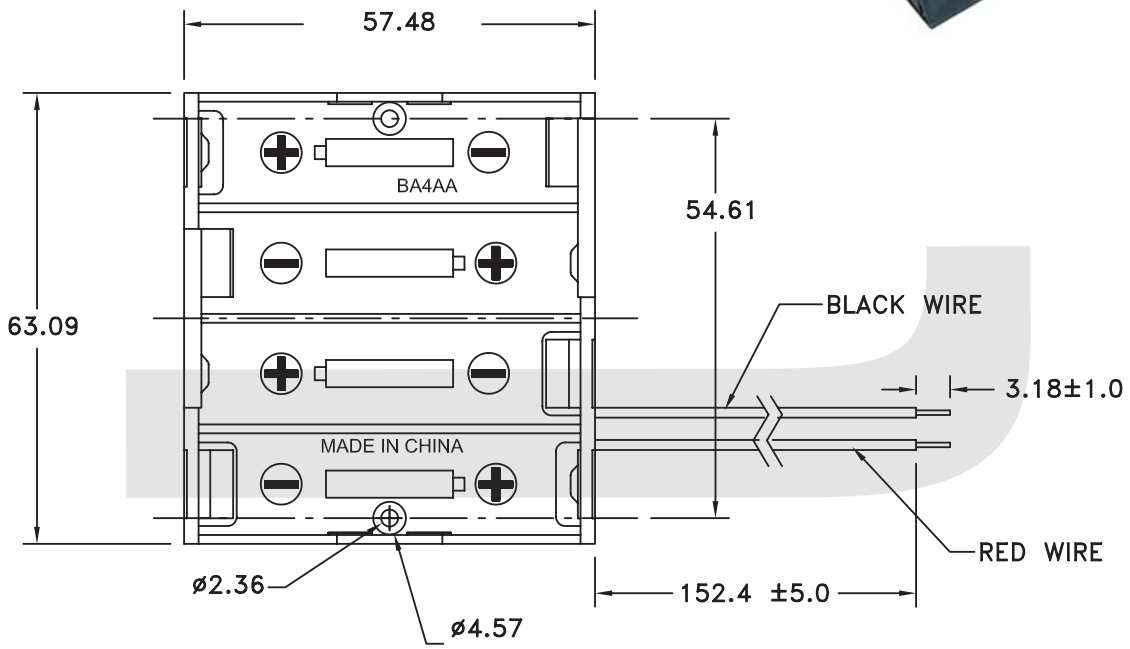

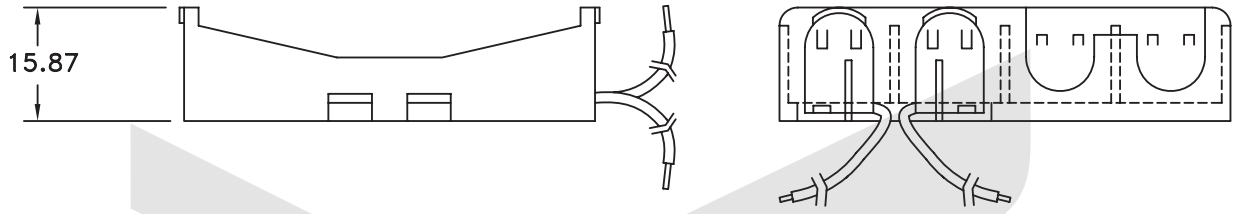

ORDER INFORMATION

Product NO.: KLS5-809-B

Part Number
Cell Box Series

TYPE:
A:With Soldered lug
B:With Wire L=15cm or other
C:With 6 Prong
D:With Pin

Cell Box Series

KLS5-809 UM-3 OR "AA" Cell Box Series

WIRE: UL 1007, # 26 AWG
BLACK & RED: 150 MM ± 5MM
STRIP & TIN: 5 MM ± 1MM
MATERIAL: A. B. S. RESIN BLACK COLOR
SPRING: .6 MM 65C SPRING WIRE
DESCR.: FOR ONE "AA" CELLS



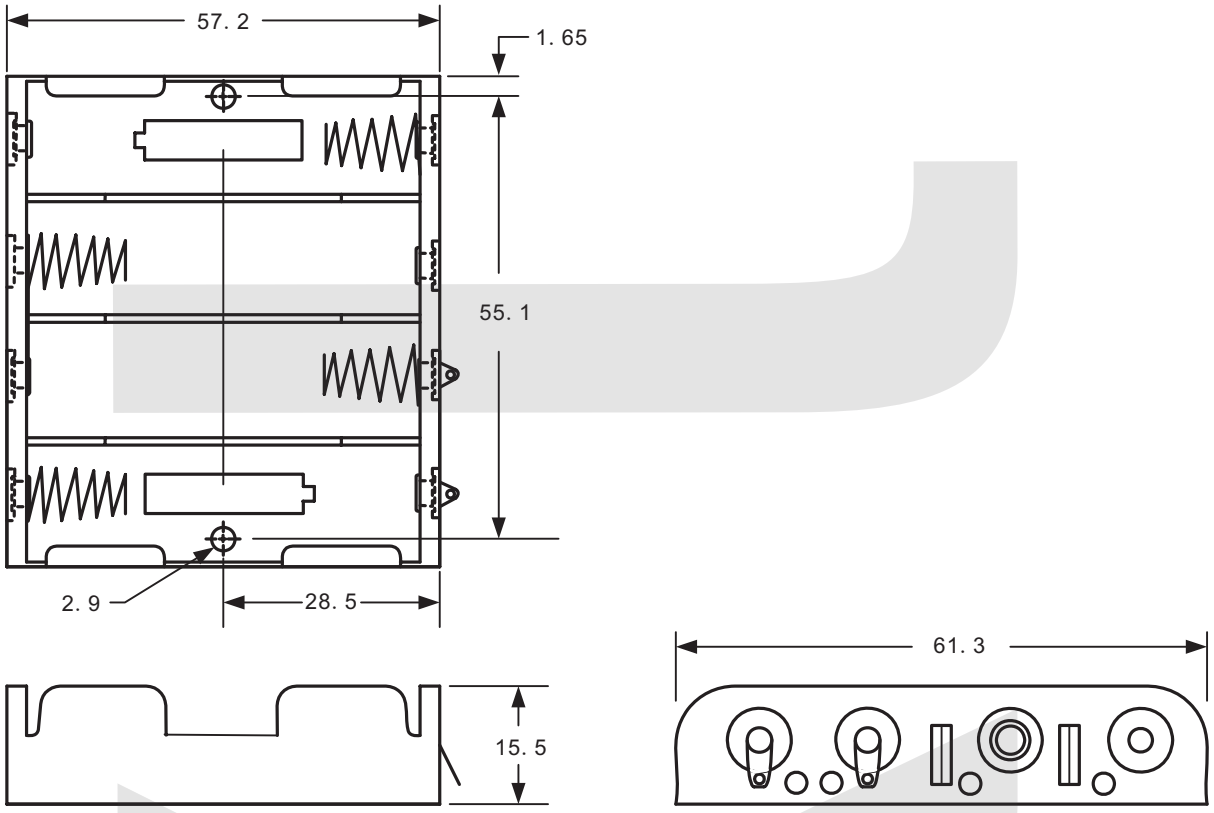

SOLDER LUGS SHOWN ABOVE

ORDER INFORMATION

Product NO.: KLS5-809-A

Part Number
Cell Box Series

TYPE:
A:With Soldered lug
B:With Wire L=15cm or other
C:With 6 Prong
D:With Pin

Cell Box Series

KLS5-809 UM-3 OR "AA" Cell Box Series

WIRE: UL 1007, # 26 AWG
BLACK & RED: 150 MM ± 5MM
STRIP & TIN: 5 MM ± 1MM
MATERIAL: A. B. S. RESIN BLACK COLOR
SPRING: .6 MM 65C SPRING WIRE
DESCR.: FOR ONE "AA" CELLS



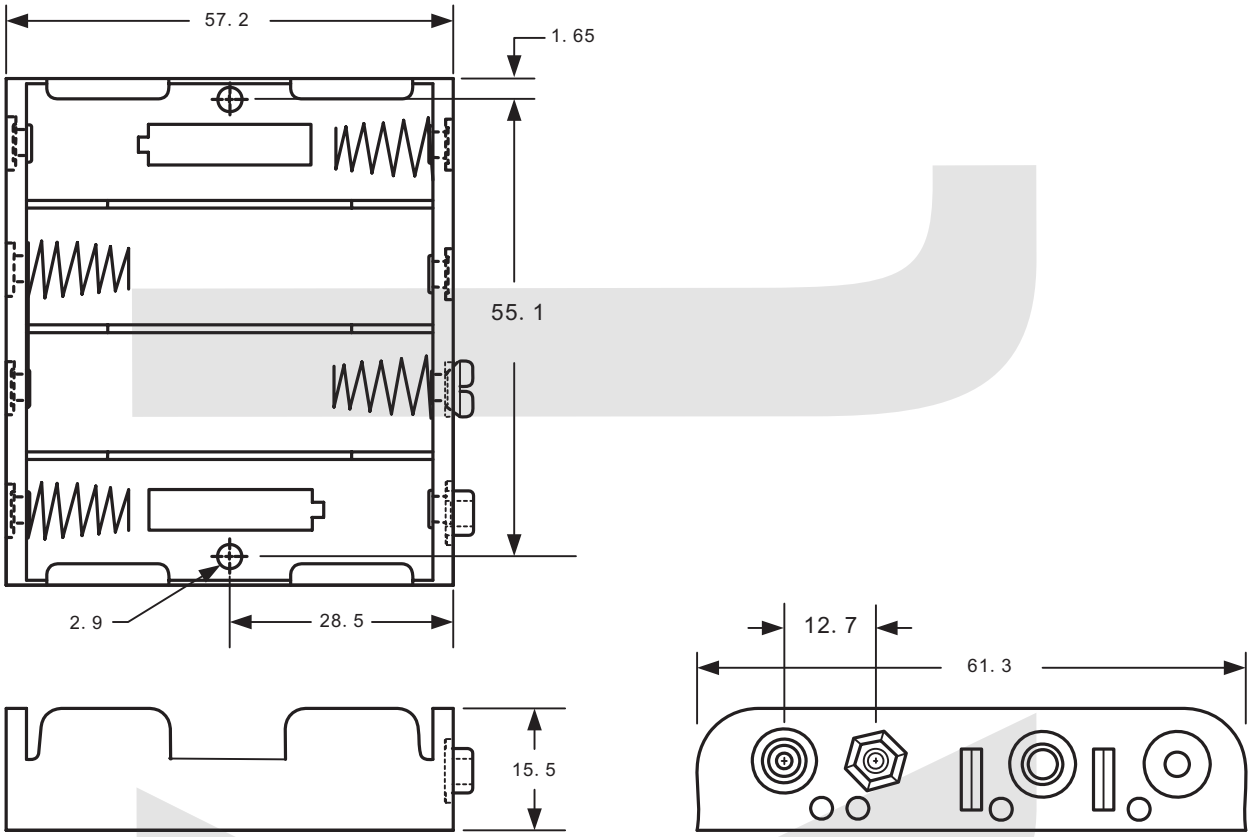

ORDER INFORMATION

Product NO.: KLS5-809-C

Part Number
Cell Box Series

TYPE:
A:With Soldered lug
B:With Wire L=15cm or other
C:With 6 Prong snap
D:With Pin

Cell Box Series

KLS5-809 UM-3 OR "AA" Cell Box Series

WIRE: UL 1007, # 26 AWG
BLACK & RED: 150 MM ± 5MM
STRIP & TIN: 5 MM ± 1MM
MATERIAL: A. B. S. RESIN BLACK COLOR
SPRING: .6 MM 65C SPRING WIRE
DESCR.: FOR ONE "AA" CELLS



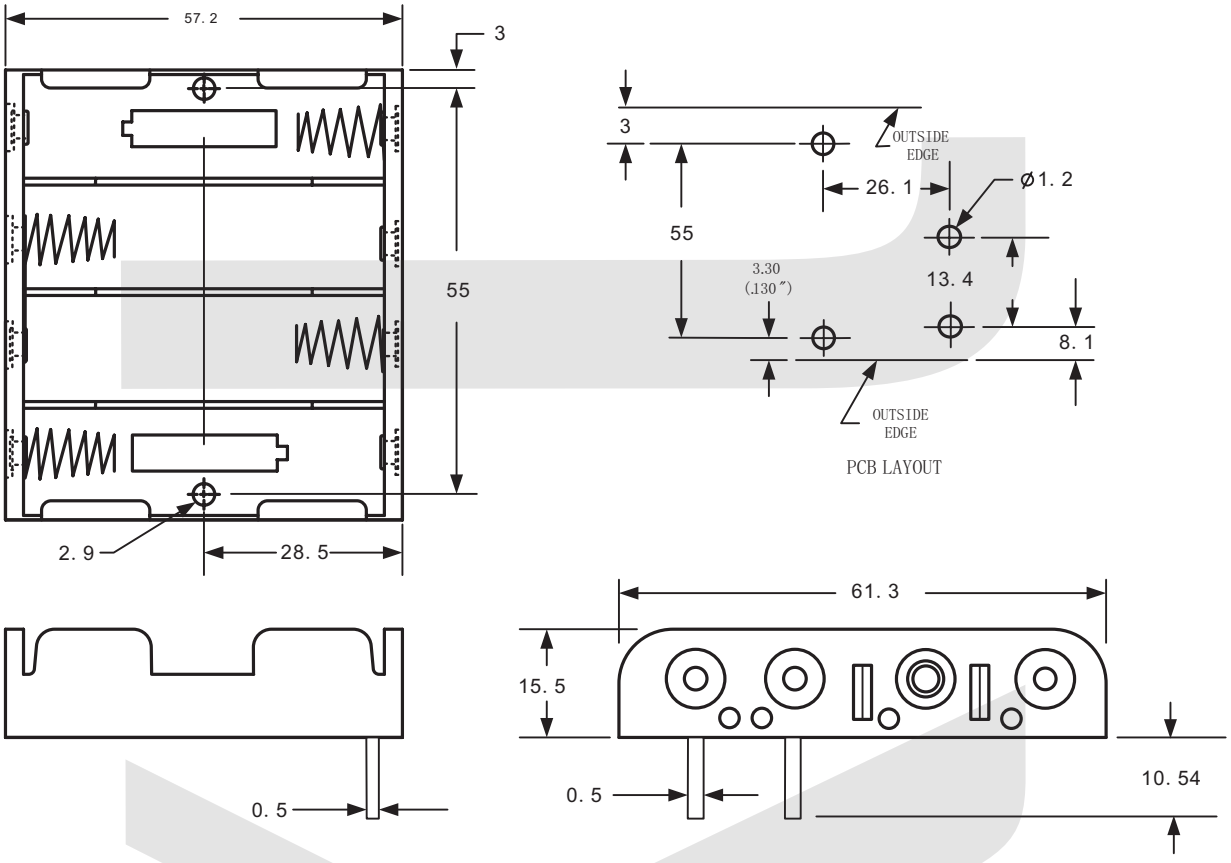

ORDER INFORMATION

Product NO.: KLS5-809-D

Part Number
Cell Box Series

TYPE:
A:With Soldered lug
B:With Wire L=15cm or other
C:With 6 Prong snap
D:With Pin

Cell Box Series

KLS5-810 UM-3 OR "AA" Cell Box Series

WIRE: UL 1007, # 26 AWG
BLACK & RED: 150 MM ± 5MM
STRIP & TIN: 5 MM ± 1MM
MATERIAL: A. B. S. RESIN BLACK COLOR
SPRING: .6 MM 65C SPRING WIRE
DESCR.: FOR ONE "AA" CELLS



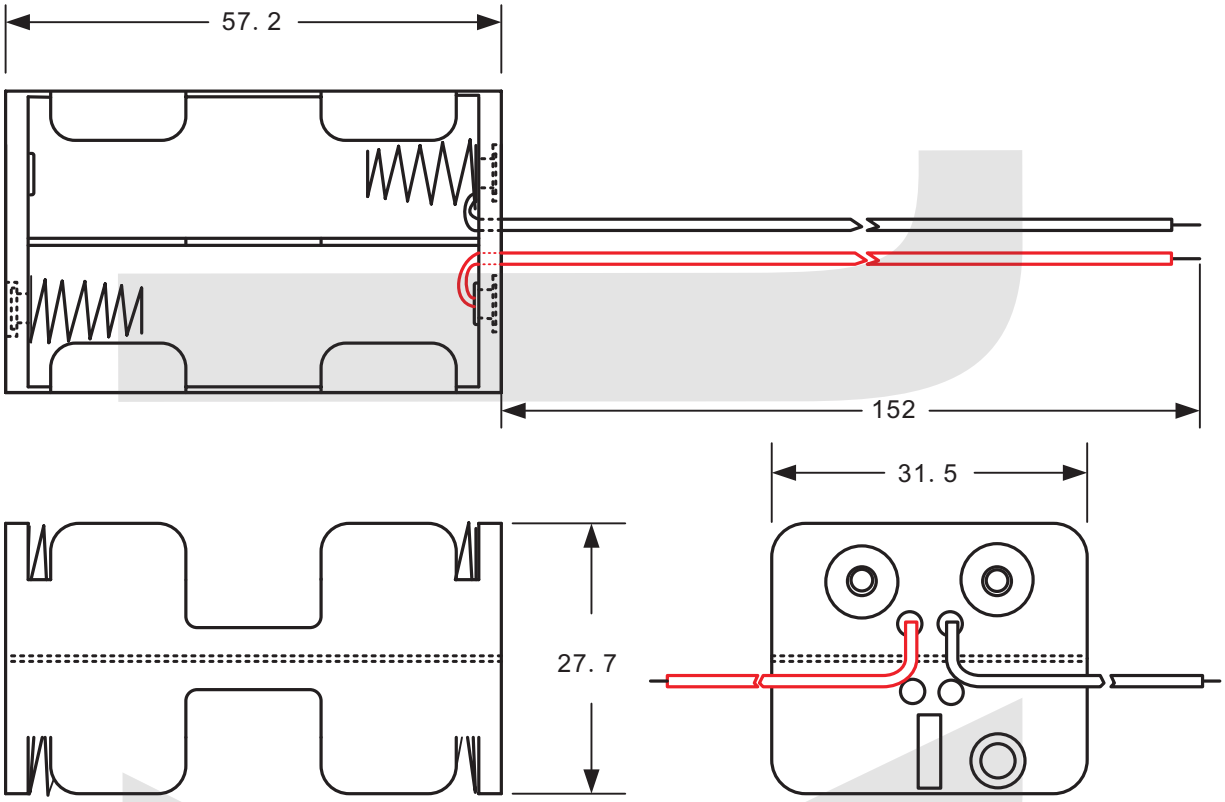

WIRE LEADS SHOWN ABOVE

ORDER INFORMATION

Product NO.: KLS5-810-B

Part Number
Cell Box Series

TYPE:
A:With Soldered lug
B:With Wire L=15cm or other
C:With 6 Prong snap

Cell Box Series

KLS5-810 UM-3 OR "AA" Cell Box Series

WIRE: UL 1007, # 26 AWG
BLACK & RED: 150 MM ± 5MM
STRIP & TIN: 5 MM ± 1MM
MATERIAL: A. B. S. RESIN BLACK COLOR
SPRING: .6 MM 65C SPRING WIRE
DESCR.: FOR ONE "AA" CELLS



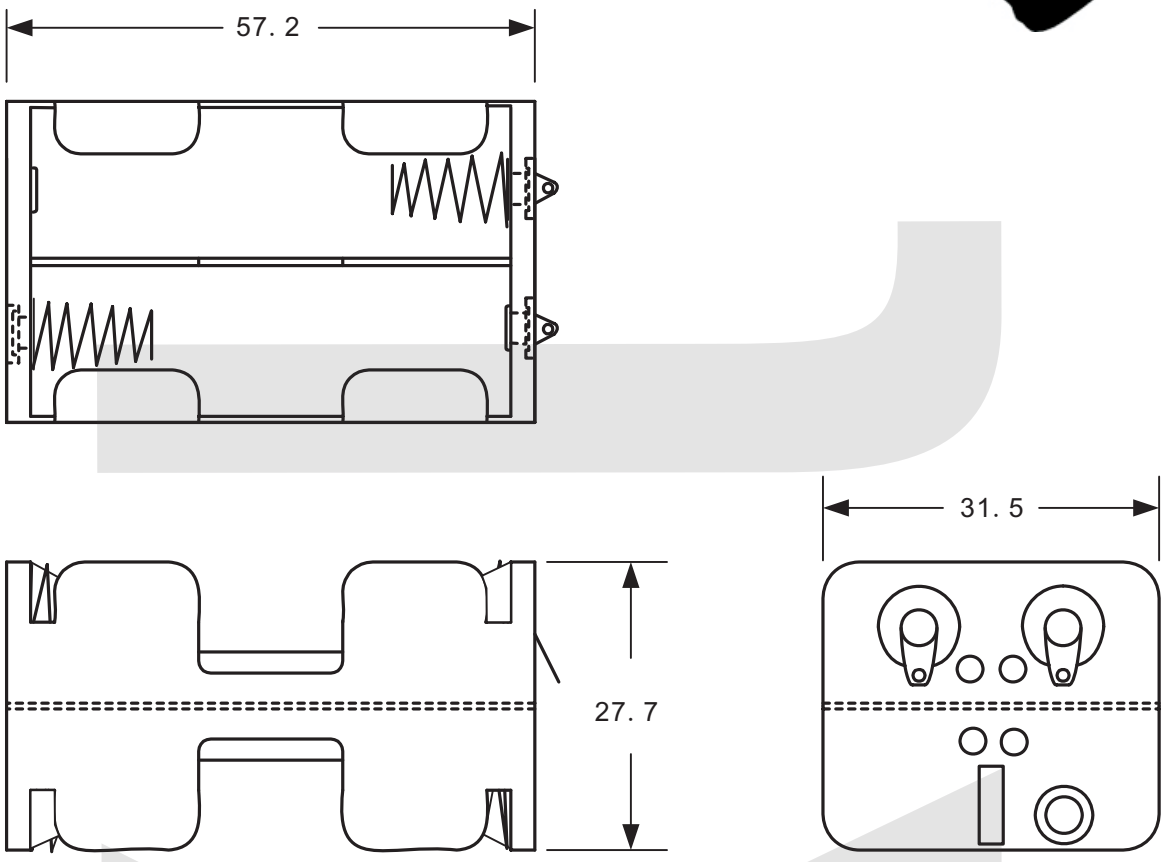

SOLDER LUGS SHOWN ABOVE

ORDER INFORMATION

Product NO.: KLS5-810-A

Part Number
Cell Box Series

TYPE:
A:With Soldered lug
B:With Wire L=15cm or other
C:With 6 Prong snap

Cell Box Series

KLS5-810 UM-3 OR "AA" Cell Box Series

WIRE: UL 1007, # 26 AWG
BLACK & RED: 150 MM ± 5MM
STRIP & TIN: 5 MM ± 1MM
MATERIAL: A. B. S. RESIN BLACK COLOR
SPRING: .6 MM 65C SPRING WIRE
DESCR.: FOR ONE "AA" CELLS



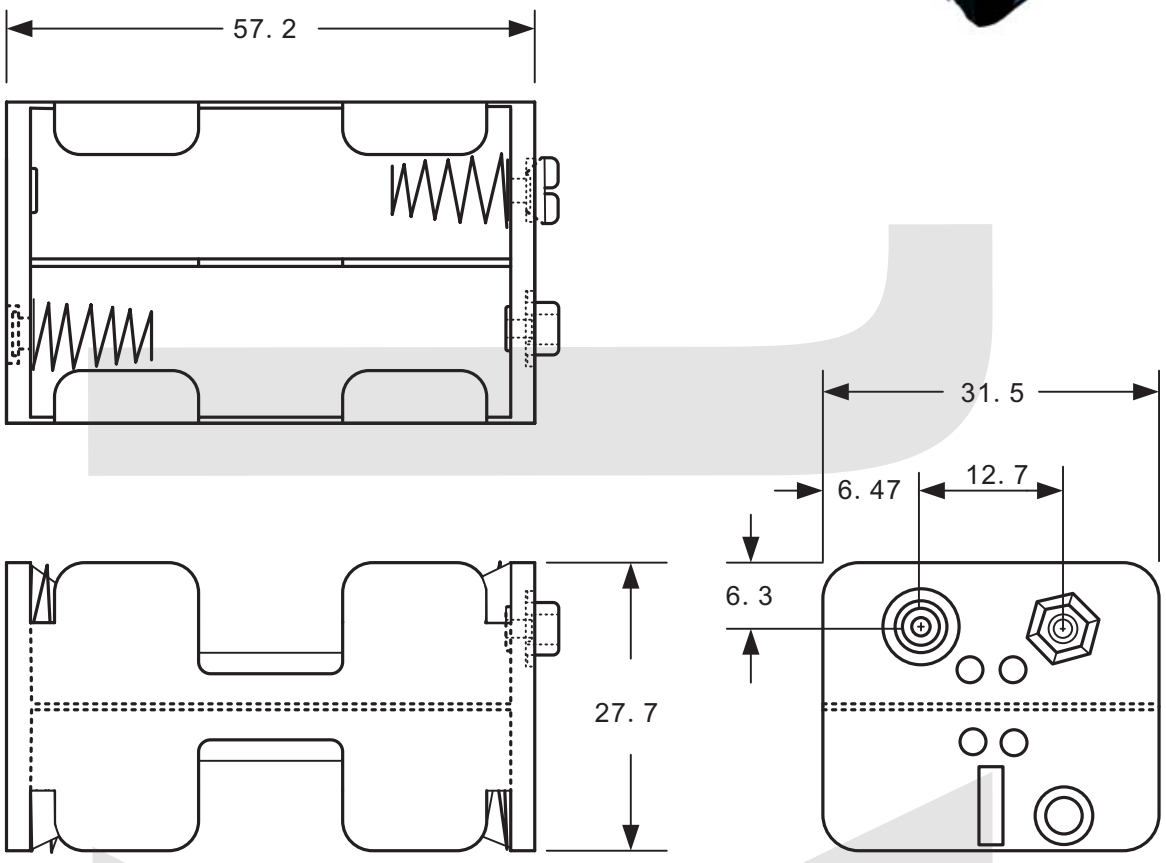

9 VOLT SNAP TYPE SHOWN ABOVE

ORDER INFORMATION

Product NO.: KLS5-810-C

Part Number
Cell Box Series

TYPE:
A:With Soldered lug
B:With Wire L=15cm or other
C:With 6 Prong snap

Cell Box Series

KLS5-812 UM-3 OR "AA" Safety Battery Holder Series

WIRE: UL 1007, # 26 AWG
BLACK & RED: 150 MM ± 5MM
STRIP & TIN: 5 MM ± 1MM
MATERIAL: A. B. S. RESIN, BLACK COLOR
SPRING: .6 MM 65C SPRING WIRE
DESCR.: FOR FOUR "AA" CELLS
WITH COVER & SCREW
SERIES CONNECTION, 6 VOLTS



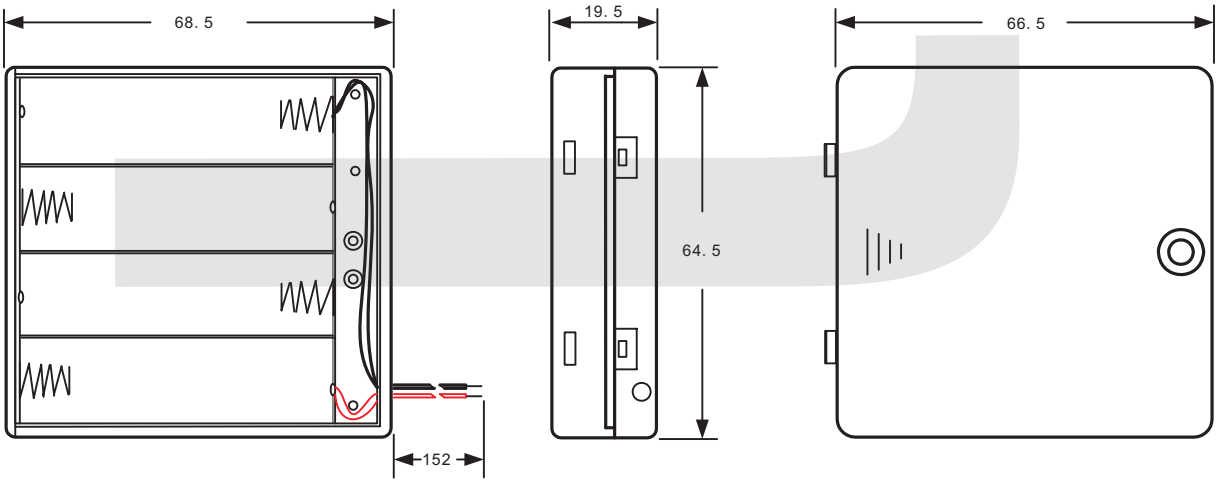

Holder　　END VIEW　　Cover

ORDER INFORMATION

Product NO.: KLS5-812-B

Part Number
Safety Battery Holder Series

TYPE:
B:With Wire And with switch L=15cm or other

Cell Box Series

KLS5-814 UM-3 OR "AA" Cell Box Series

WIRE: UL 1007, # 26 AWG
BLACK & RED: 150 MM ± 5MM
STRIP & TIN: 5 MM ± 1MM
MATERIAL: A. B. S. RESIN BLACK COLOR
SPRING: .6 MM 65C SPRING WIRE
DESCR.: FOR ONE "AA" CELLS



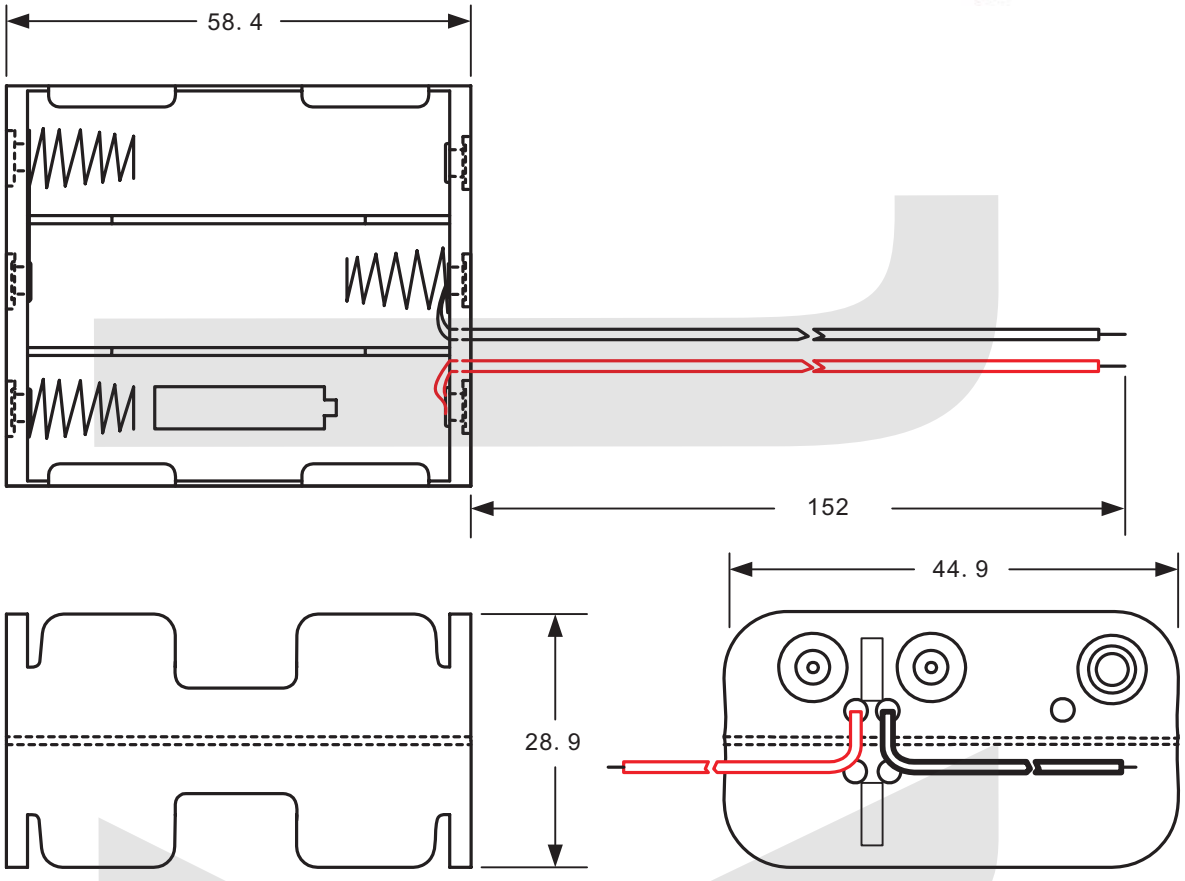

ORDER INFORMATION

Product NO.: KLS5-814-B

Part Number
Cell Box Series

TYPE:
A:With Soldered lug
B:With Wire L=15cm or other
C:With 6 Prong snap

Cell Box Series

KLS5-814 UM-3 OR "AA" Cell Box Series

WIRE: UL 1007, # 26 AWG
BLACK & RED: 150 MM ± 5MM
STRIP & TIN: 5 MM ± 1MM
MATERIAL: A. B. S. RESIN BLACK COLOR
SPRING: .6 MM 65C SPRING WIRE
DESCR.: FOR ONE "AA" CELLS



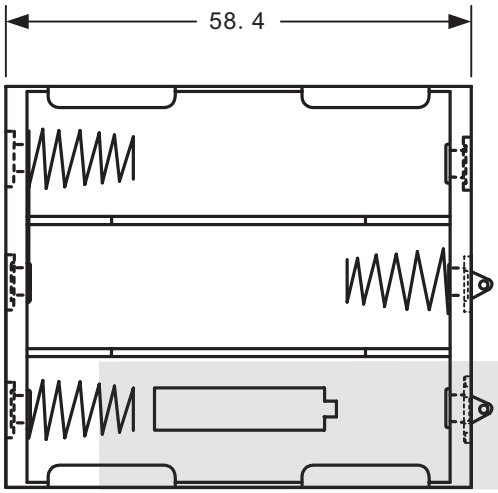

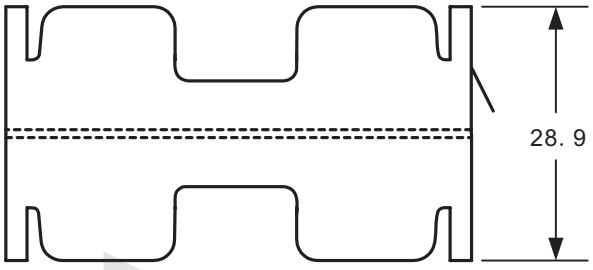

SOLDER LUGS SHOWN ABOVE

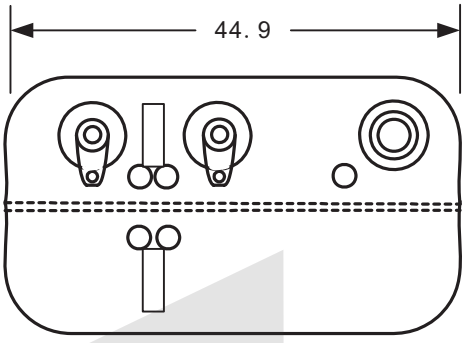

ORDER INFORMATION

Product NO.: KLS5-814-A

Part Number
Cell Box Series

TYPE:
A:With Soldered lug
B:With Wire L=15cm or other
C:With 6 Prong snap

Cell Box Series

KLS5-814 UM-3 OR "AA" Cell Box Series

WIRE: UL 1007, # 26 AWG
BLACK & RED: 150 MM ± 5MM
STRIP & TIN: 5 MM ± 1MM
MATERIAL: A. B. S. RESIN BLACK COLOR
SPRING: .6 MM 65C SPRING WIRE
DESCR.: FOR ONE "AA" CELLS



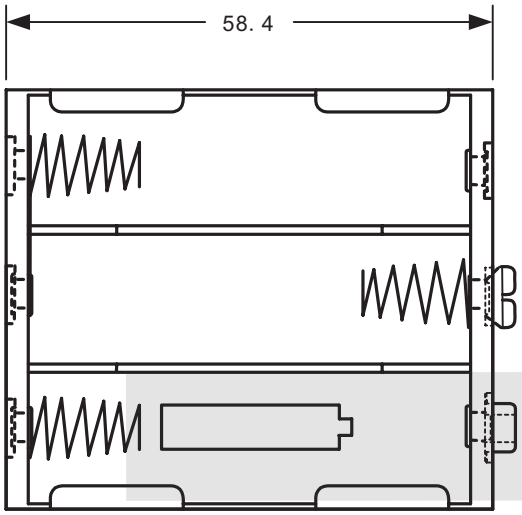

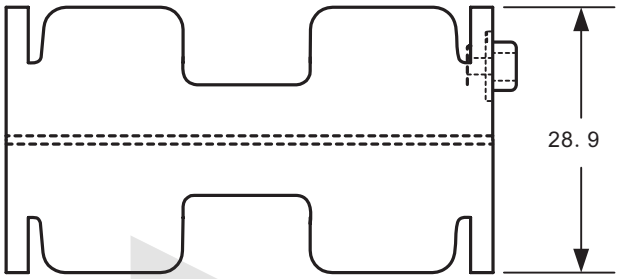

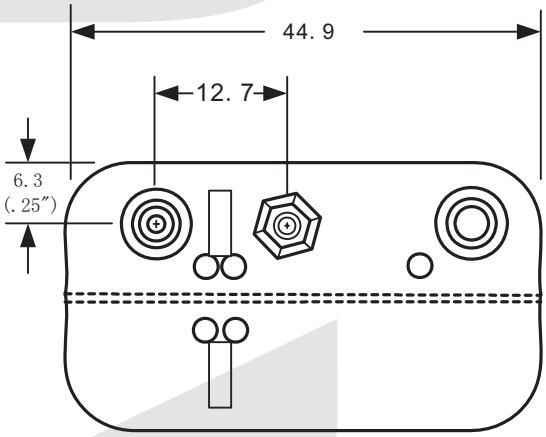

SOLDER LUGS SHOWN ABOVE

ORDER INFORMATION

Product NO.: KLS5-814-C

Part Number
Cell Box Series

TYPE:
A:With Soldered lug
B:With Wire L=15cm or other
C:With 6 Prong snap

Cell Box Series

KLS5-816 UM-3 OR "AA" Cell Box Series

WIRE: UL 1007, # 26 AWG
BLACK & RED: 150 MM ± 5MM
STRIP & TIN: 5 MM ± 1MM
MATERIAL: A. B. S. RESIN BLACK COLOR
SPRING: .6 MM 65C SPRING WIRE
DESCR.: FOR ONE "AA" CELLS



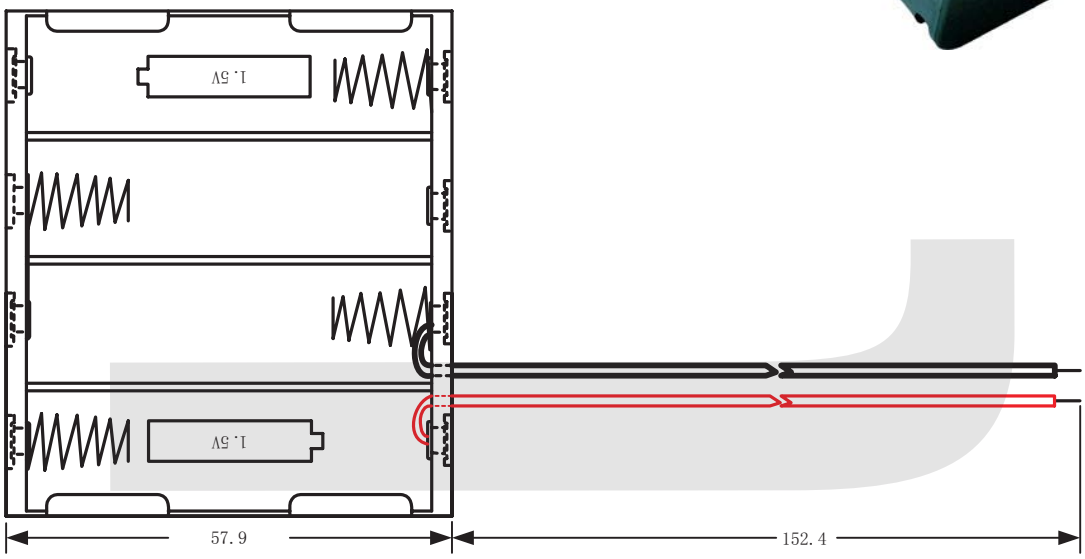

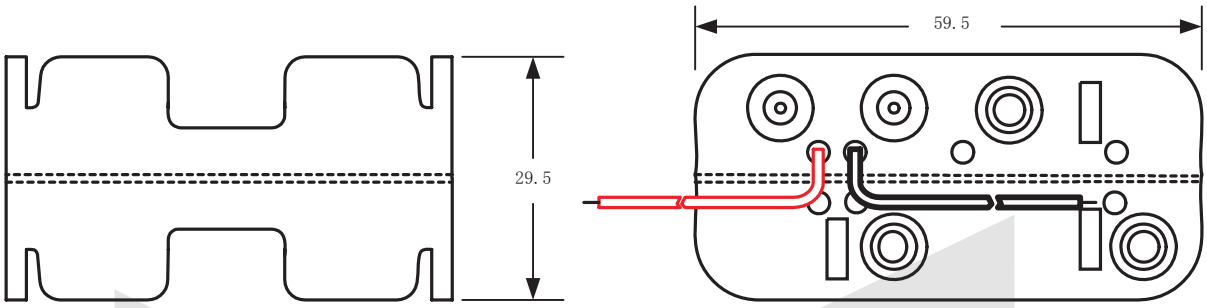

WIRE LEADS SHOWN ABOVE

ORDER INFORMATION

Product NO.: KLS5-816-B

Part Number
Cell Box Series

TYPE:
A:With Soldered lug
B:With Wire L=15cm or other
C:With 6 Prong

Cell Box Series

KLS5-816 UM-3 OR "AA" Cell Box Series

WIRE: UL 1007, # 26 AWG
BLACK & RED: 150 MM ± 5MM
STRIP & TIN: 5 MM ± 1MM
MATERIAL: A. B. S. RESIN BLACK COLOR
SPRING: .6 MM 65C SPRING WIRE
DESCR.: FOR ONE "AA" CELLS



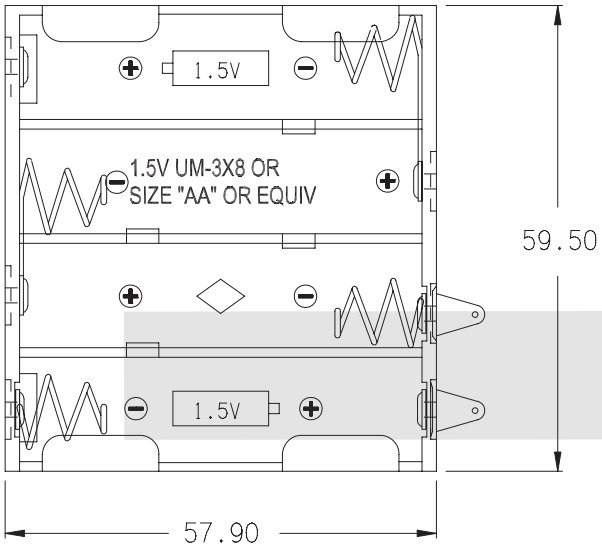

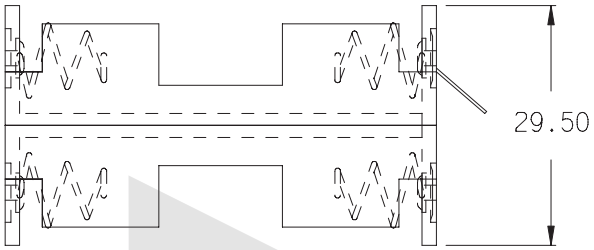

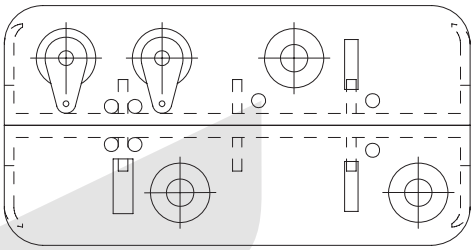

ORDER INFORMATION

Product NO.: KLS5-816-A

Part Number
Cell Box Series

TYPE:
A:With Soldered lug
B:With Wire L=15cm or other
C:With 6 Prong

Cell Box Series

KLS5-816 UM-3 OR "AA" Cell Box Series

WIRE: UL 1007, # 26 AWG
BLACK & RED: 150 MM ± 5MM
STRIP & TIN: 5 MM ± 1MM
MATERIAL: A. B. S. RESIN BLACK COLOR
SPRING: .6 MM 65C SPRING WIRE
DESCR.: FOR ONE "AA" CELLS



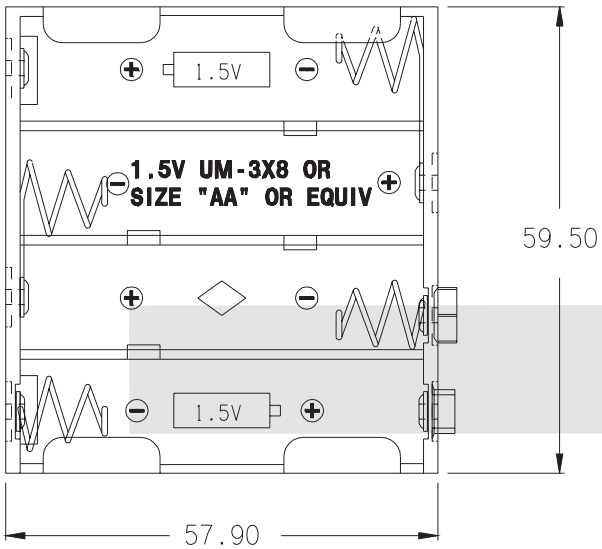

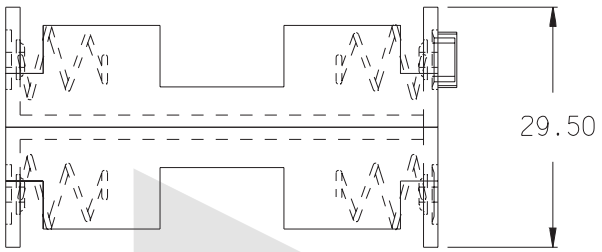

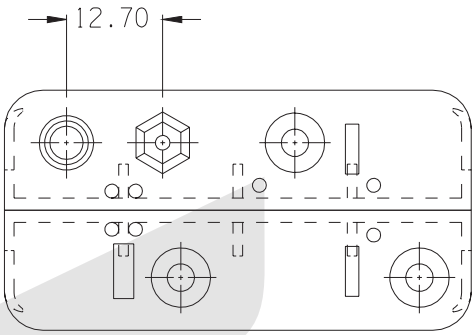

ORDER INFORMATION

Product NO.: KLS5-816-C

Part Number
Cell Box Series

TYPE:
A:With Soldered lug
B:With Wire L=15cm or other
C:With 6 Prong snap

Cell Box Series

KLS5-829 BHC-CR123A Cell Box

MATERIAL: PA66+25% GF, BLACK COLOR
SPRING: Steel



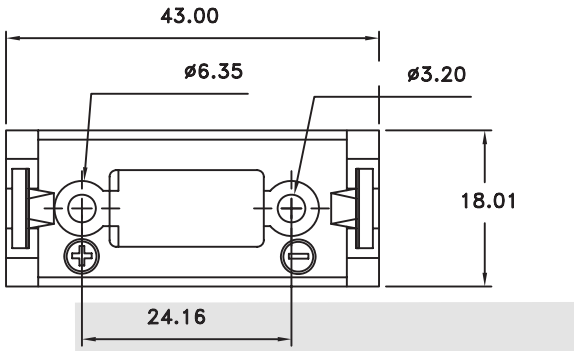

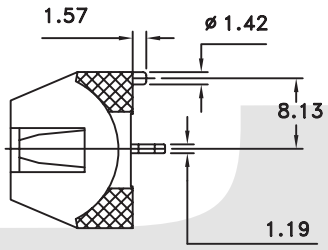

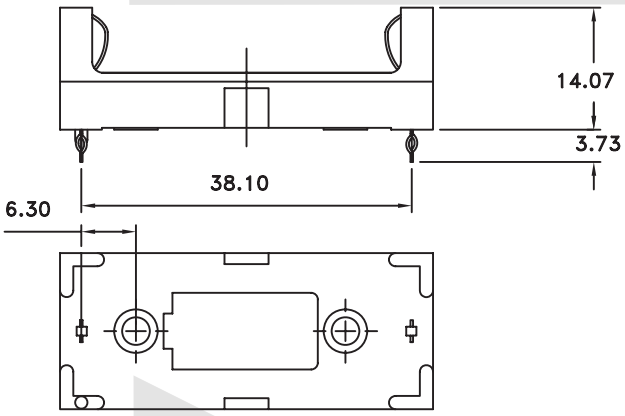

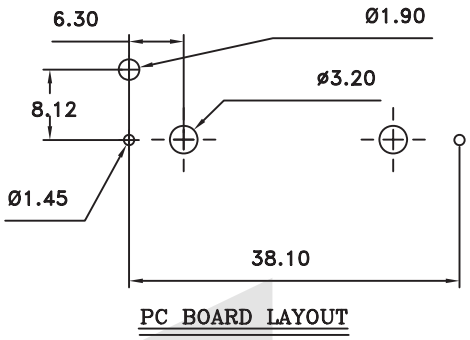

PC BOARD LAYOUT

ORDER INFORMATION

Product NO.: KLS5-829-D

- KLS5-829: Part Number / Cell Box Series
- D: TYPE: D:With Pin

Coin Cell Holder Series

KLS5-CR2032-02 Coin Cell Holder Series

Material:
Housing: 30% Glass filled PBT UL94V-0
Contacts: Brass

Electrical Characteristics:
Insulator Resistance: 1000M Ohm min.
Contact Resistance: 30m Ohm max.
Dielectnic voltage: 500V AC
Operating Temperature: -55 C~+105 C



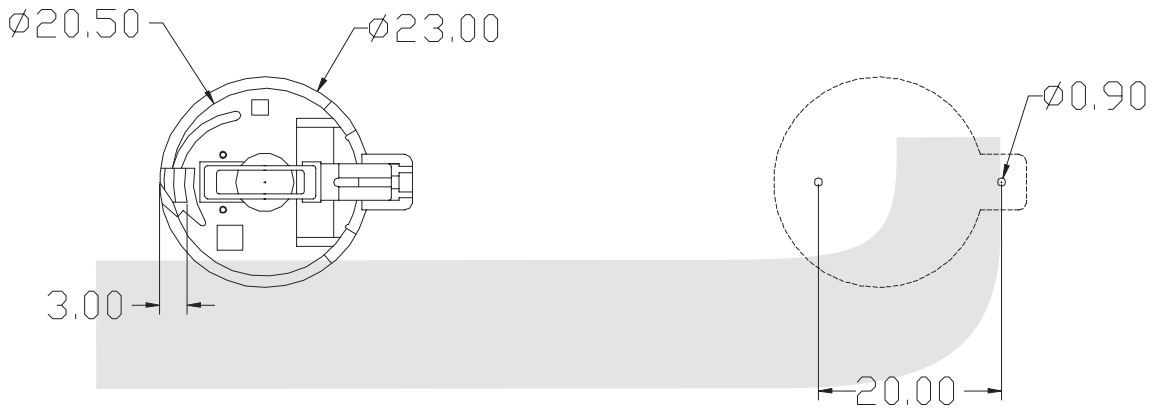

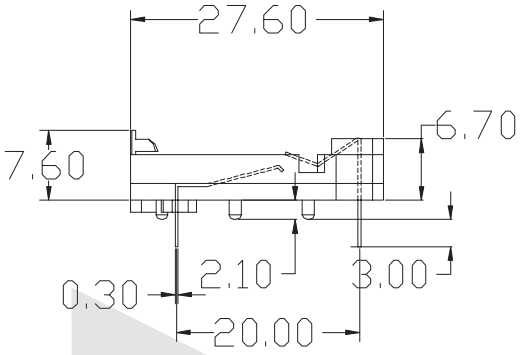

PCB HOLE LAYOUT

ORDER INFORMATION

ProductNO.: KLS5-CR2032-02

Pos. No. — Part Number

Coin Cell Holder Series

KLS5-CR2032-03 Coin Cell Holder Series

Material:
Housing: 30% Glass filled PBT UL94V-0
Contacts: Brass

Electrical Characteristics:
Insulator Resistance: 1000M Ohm min.
Contact Resistance: 30m Ohm max.
Dielectnic voltage: 500V AC
Operating Temperature: -55 C~+105 C



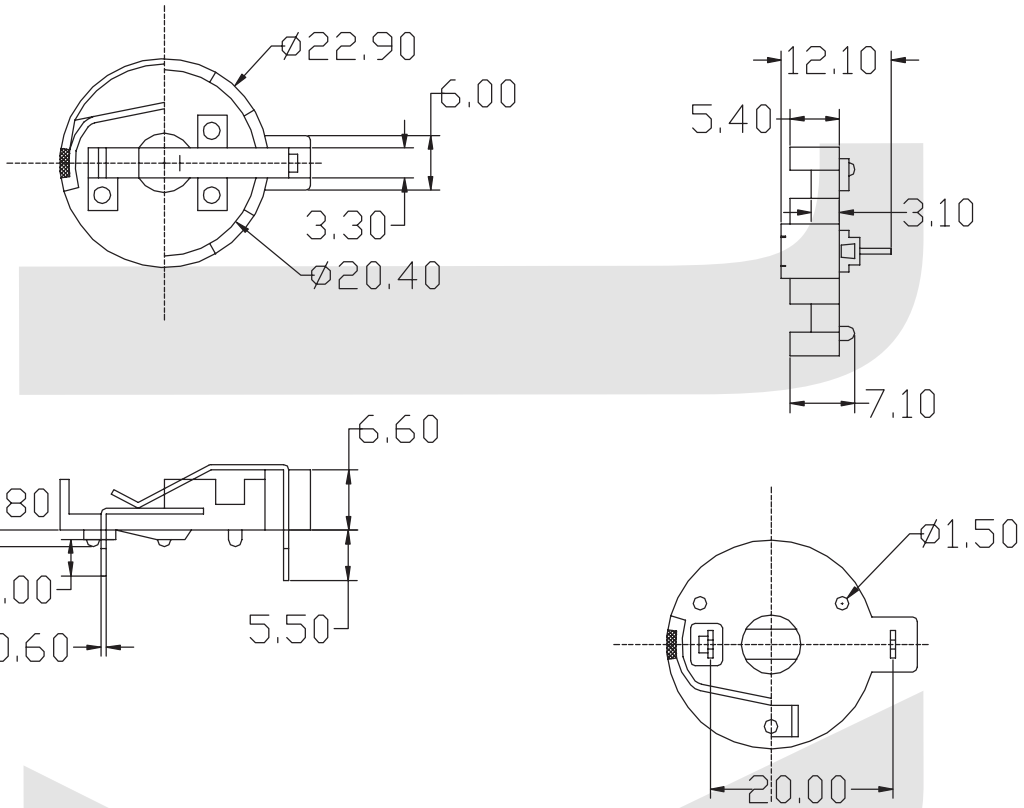

ORDER INFORMATION

ProductNO.: KLS5-CR2032-03

Pos. No. — Part Number

Coin Cell Holder Series

KLS5-CR2032-01 Coin Cell Holder Series

Material:
Housing: 30% Glass filled PBT UL94V-0
Contacts: Brass

Electrical Characteristics:
Insulator Resistance: 1000M Ohm min.
Contact Resistance: 30m Ohm max.
Dielectnic voltage: 500V AC
Operating Temperature: -55 C~+105 C



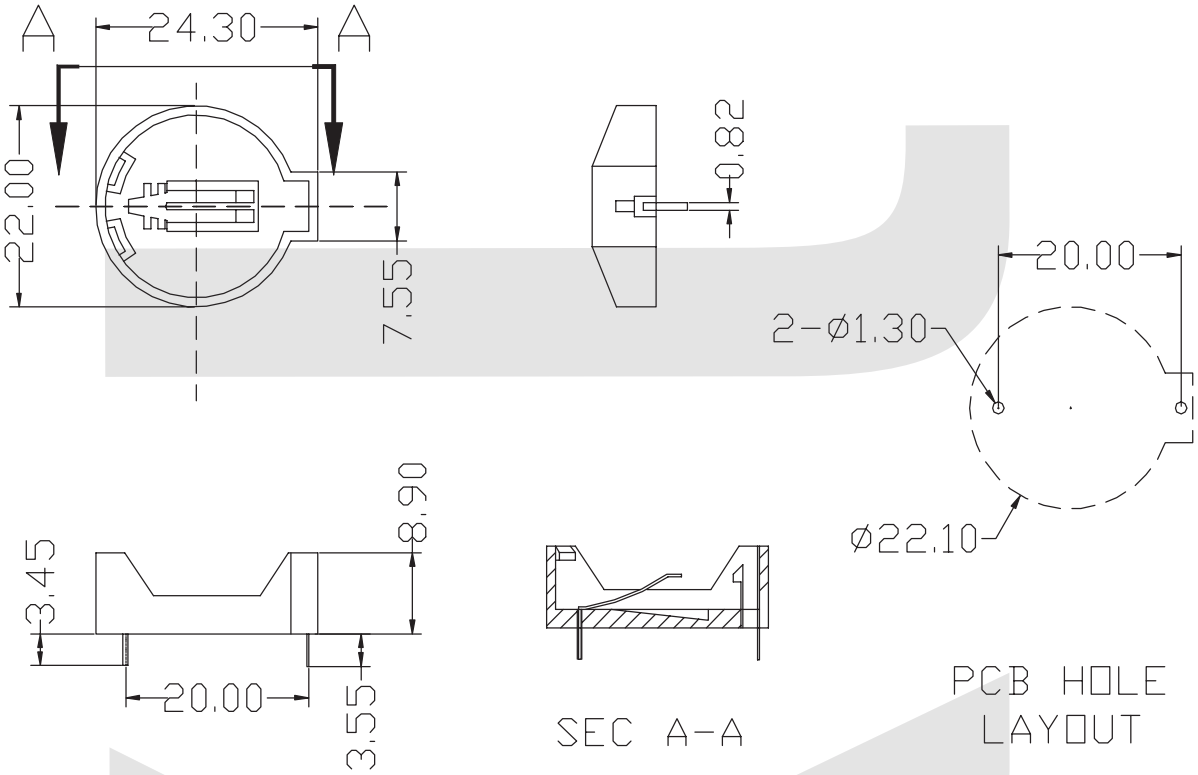

ORDER INFORMATION

ProductNO.: KLS5-CR2032-01

Pos. No. — Part Number

Coin Cell Holder Series

KLS5-CR2032-04 Coin Cell Holder Series

Material:
Housing: 30% Glass filled PBT UL94V-0
Contacts: Brass

Electrical Characteristics:
Insulator Resistance: 1000M Ohm min.
Contact Resistance: 30m Ohm max.
Dielectnic voltage: 500V AC
Operating Temperature: -55 C~+105 C



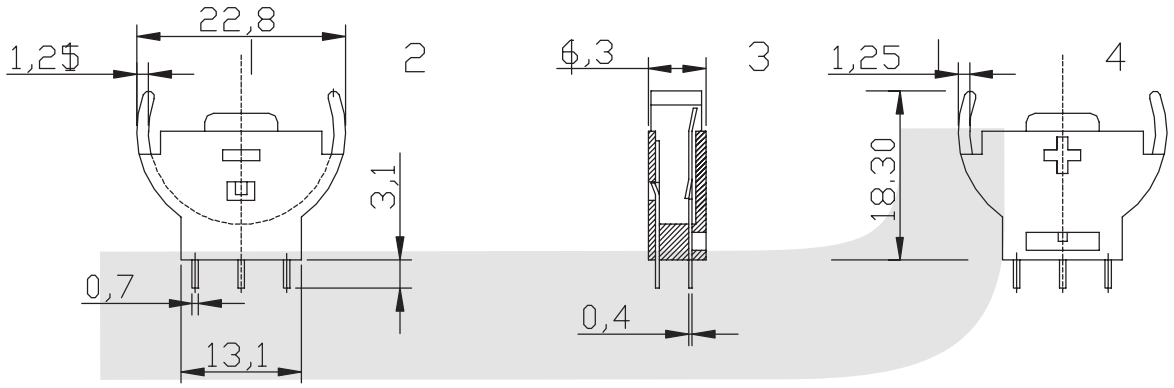

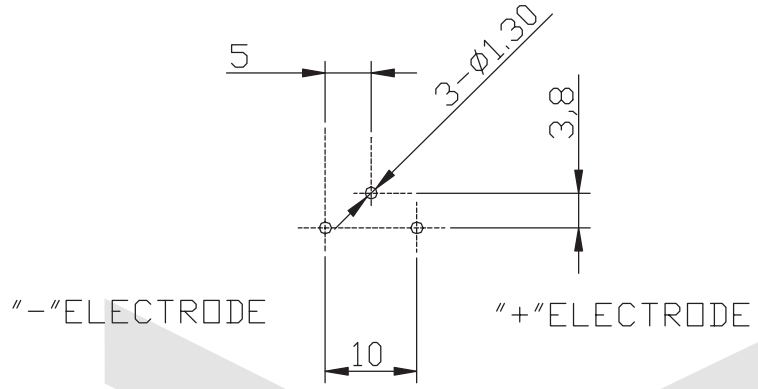

ORDER INFORMATION

ProductNO.: KLS5-CR2032-04

Pos. No. — Part Number

Coin Cell Holder Series

KLS5-CR2032-05 Coin Cell Holder Series

Material:
Housing: LCP
Contacts: Phosphor Bronze

Electrical Characteristics:
Insulator Resistance: 1000M Ohm min.
Contact Resistance: 30m Ohm max.
Dielectnic voltage: 500V AC
Operating Temperature: -55 C~+105 C



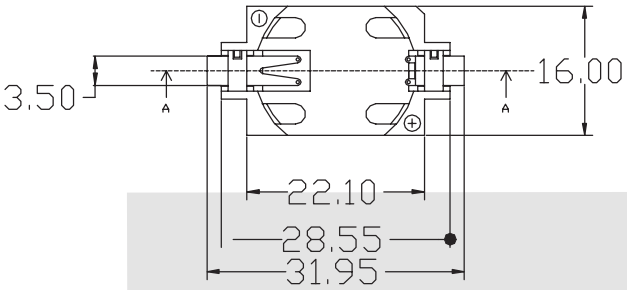

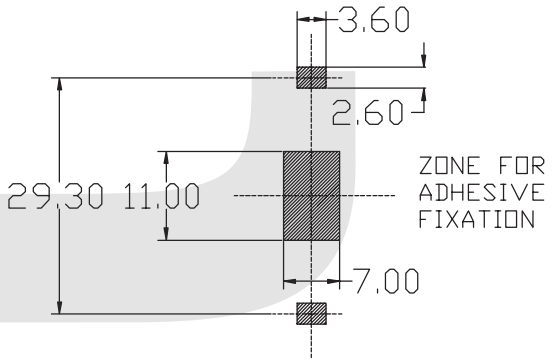

PCB LAYOUT

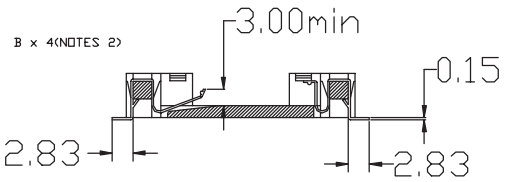

SECTION A-A

ORDER INFORMATION

ProductNO.: KLS5-CR2032-05

Pos. No. — Part Number

Coin Cell Holder Series

KLS5-CR2032-06 Coin Cell Holder Series

Material:

Housing:30% Glass filled PBT UL94V-0
Contacts: Phosphor Bronze

Electrical Characteristics:

Insulator Resistance: 1000M Ohm min.
Contact Resistance: 30m Ohm max.
Dielectnic voltage: 500V AC
Operating Temperature: -55 C~+105 C



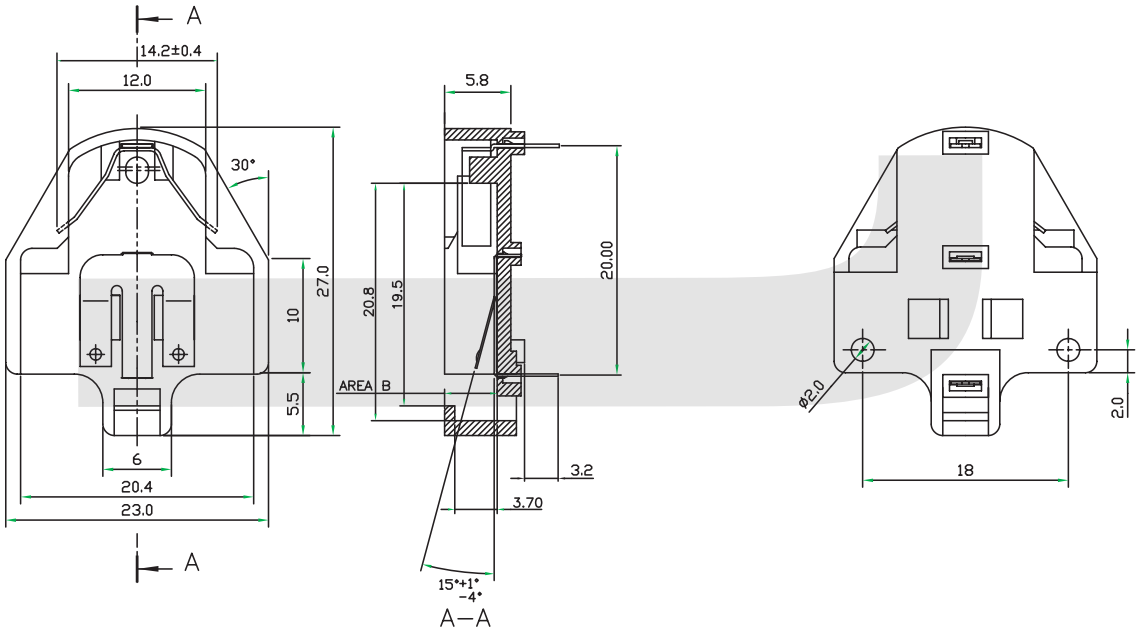

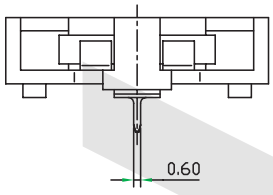

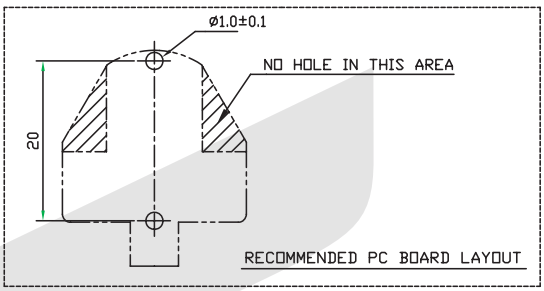

ORDER INFORMATION

ProductNO.: KLS5-CR2032-06

Pos. No. — Part Number

Coin Cell Holder Series

KLS5-CR2032-08 Coin Cell Holder Series

Material:
Housing:NYLON 66+GF, UL 94V-0
Contacts: Phosphor Bronze

Electrical Characteristics:
Insulator Resistance: 1000M Ohm min.
Contact Resistance: 30m Ohm max.
Dielectnic voltage: 500V AC
Operating Temperature: -55 C~+105 C



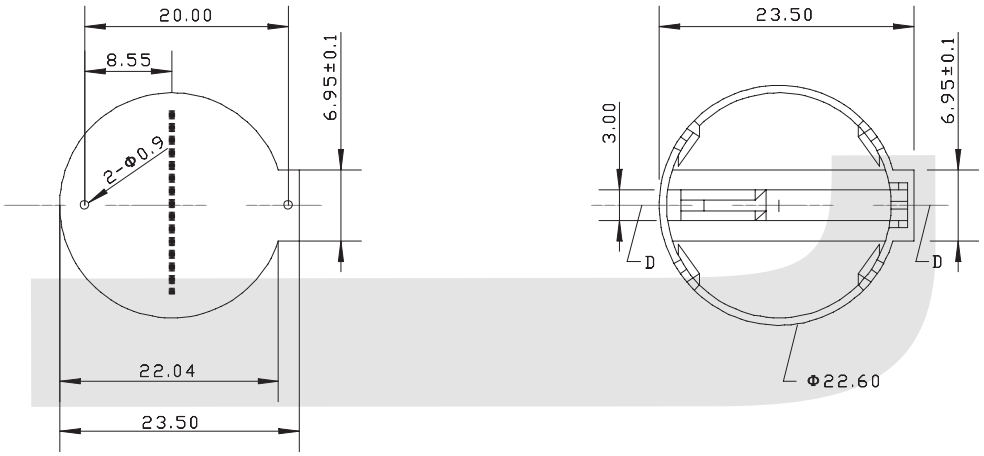

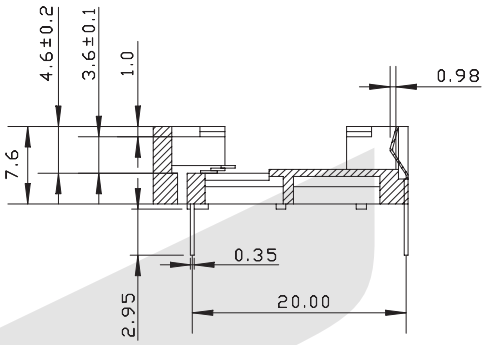

ORDER INFORMATION

ProductNO.: KLS5-CR2032-08

Pos. No. — Part Number

Coin Cell Holder Series

KLS5-CR2032-09 Coin Cell Holder Series

Material:
Contacts: Phosphor Bronze

Electrical Characteristics:
Insulator Resistance: 1000M Ohm min.
Contact Resistance: 30m Ohm max.
Dielectnic voltage: 500V AC
Operating Temperature: -55 C~+105 C



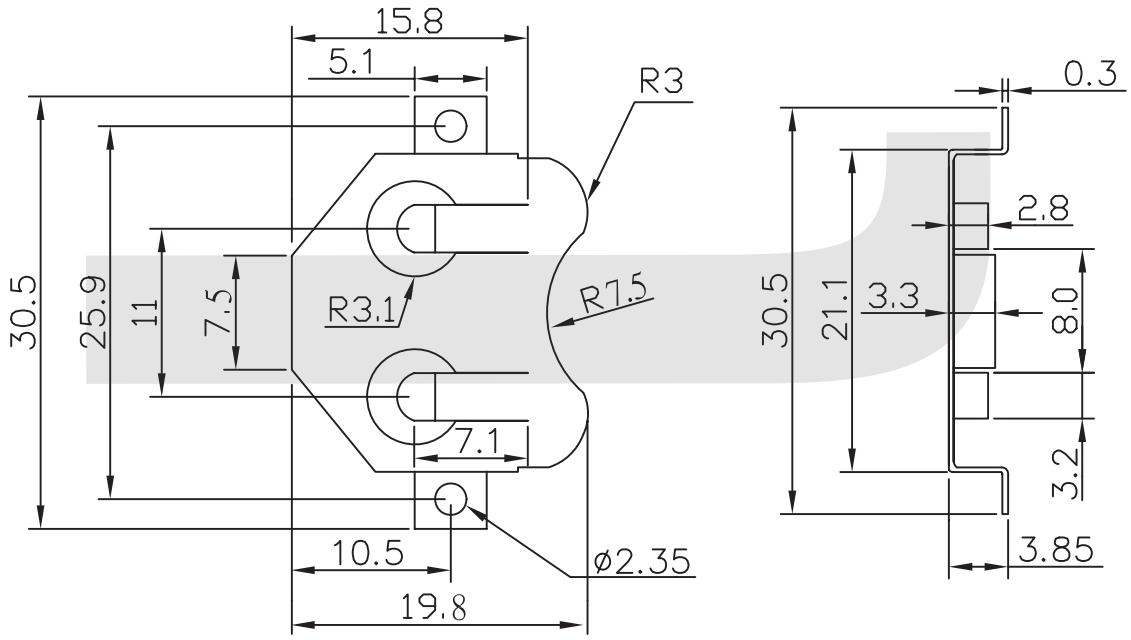

SPECIFICATION
MATERIAL:0.3mm PHOSPHORUS
BRONZE, NICKEL PLATE

ORDER INFORMATION

ProductNO.: KLS5-CR2032-09

Pos. No. — Part Number

Coin Cell Holder Series

KLS5-CR2032-10 Coin Cell Holder Series

Material:
Housing: 30% Glass filled PBT UL94V-0
Contacts: Brass

Electrical Characteristics:
Insulator Resistance: 1000M Ohm min.
Contact Resistance: 30m Ohm max.
Dielectnic voltage: 500V AC
Operating Temperature: -55 C~+105 C



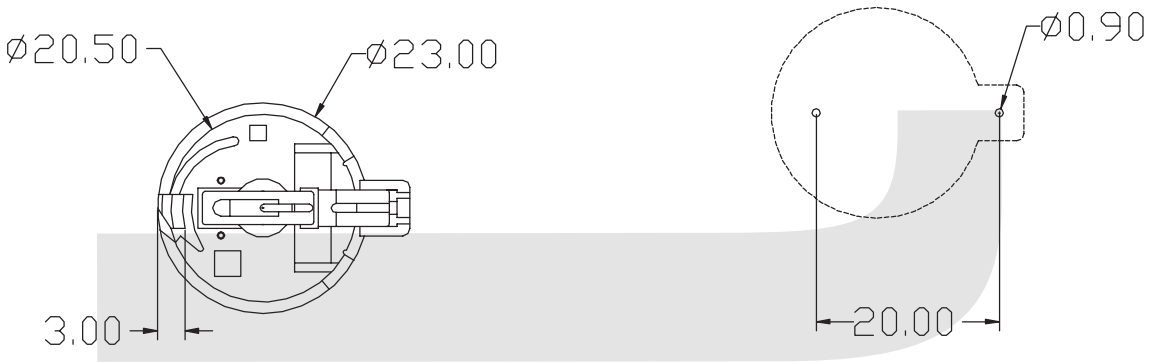

PCB HOLE LAYOUT

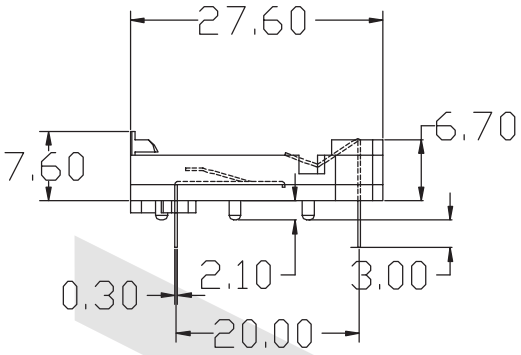

ORDER INFORMATION

ProductNO.: KLS5-CR2032-10

Pos. No. — Part Number

Coin Cell Holder Series

KLS5-CR2032-11 Coin Cell Holder Series

Material:
Housing: 30% Glass filled PBT UL94V-0
Contacts: Brass

Electrical Characteristics:
Insulator Resistance: 1000M Ohm min.
Contact Resistance: 30m Ohm max.
Dielectnic voltage: 500V AC
Operating Temperature: -55 C~+105 C



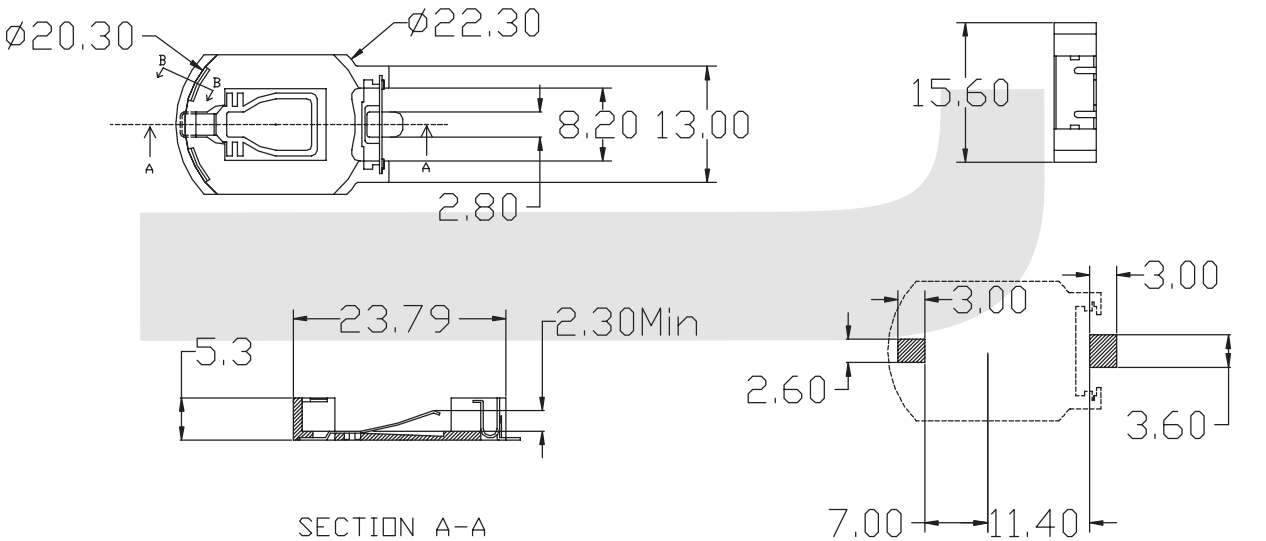

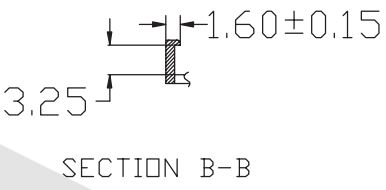

ORDER INFORMATION

ProductNO.: KLS5-CR2032-11

Pos. No. — Part Number

Coin Cell Holder Series

KLS5-CR1220-01 Coin Cell Holder Series

Material:
Housing: 30% Glass filled PBT UL94V-0
Contacts: Phosphor Bronze

Electrical Characteristics:
Insulator Resistance: 1000M Ohm min.
Contact Resistance: 30m Ohm max.
Dielectnic voltage: 500V AC
Operating Temperature: -55 C~+105 C



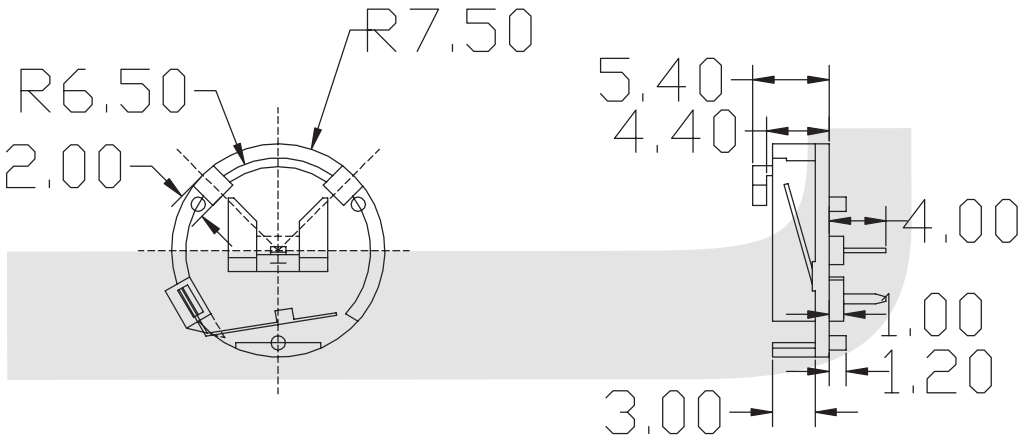

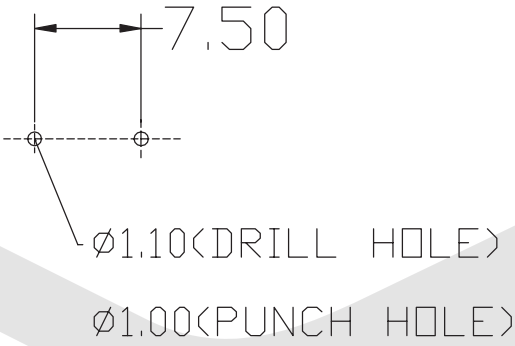

ORDER INFORMATION

ProductNO.: KLS5-CR1220-01

Pos. No. — Part Number

Coin Cell Holder Series

KLS5-CR1220-02 Coin Cell Holder Series

Material:
Housing: 30% Glass filled PBT UL94V-0
Contacts: Phosphor Bronze

Electrical Characteristics:
Insulator Resistance: 1000M Ohm min.
Contact Resistance: 30m Ohm max.
Dielectnic voltage: 500V AC
Operating Temperature: -55 C~+105 C



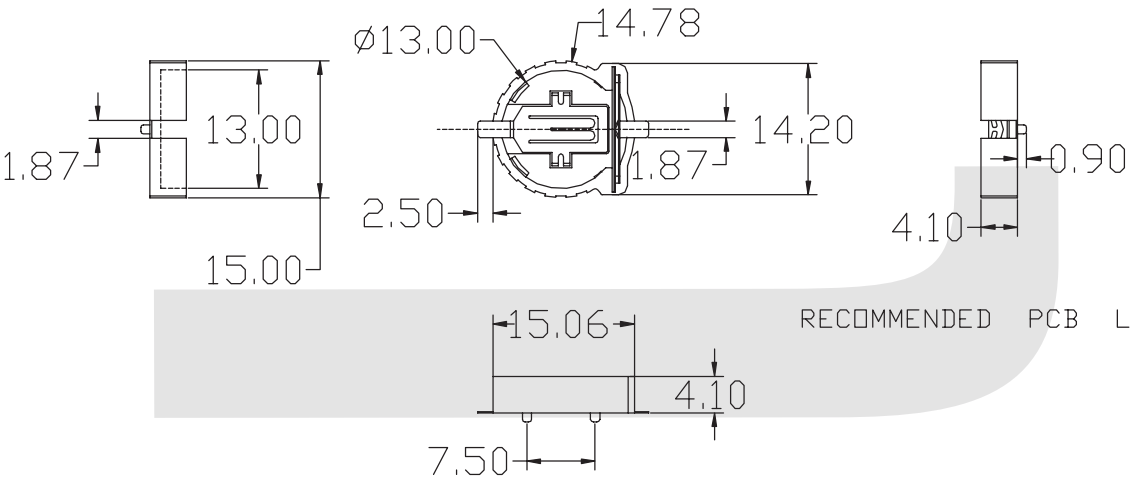

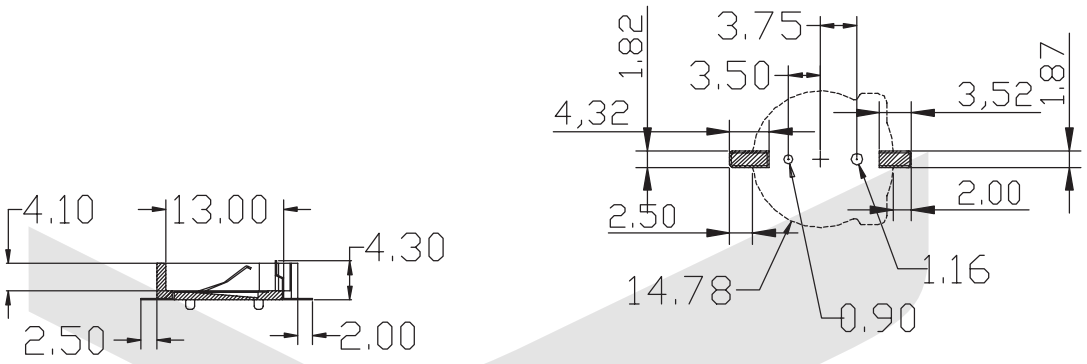

ORDER INFORMATION

ProductNO.: KLS5-CR1220-02

Pos. No. — Part Number

9V Battery seat Series

KLS5-BC9V-01 9V Battery seat Series



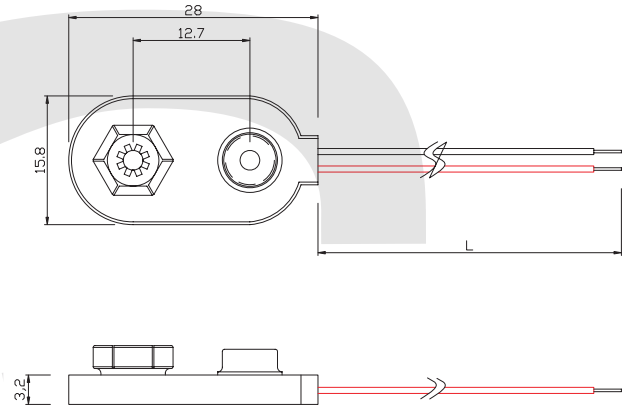

KLS5-BC9V-02 9V Battery seat Series



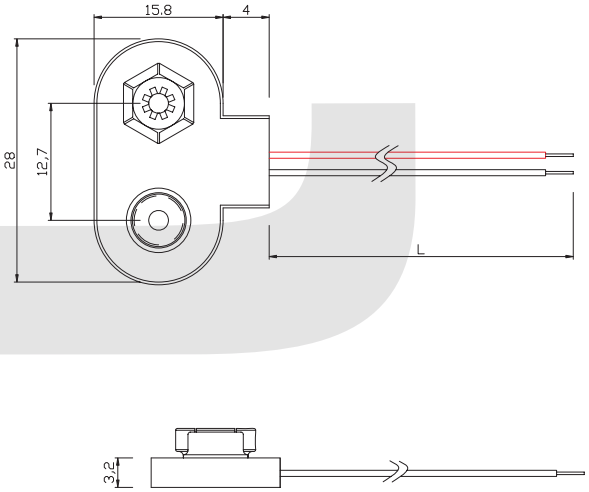

KLS5-BC9V-03 9V Battery seat Series

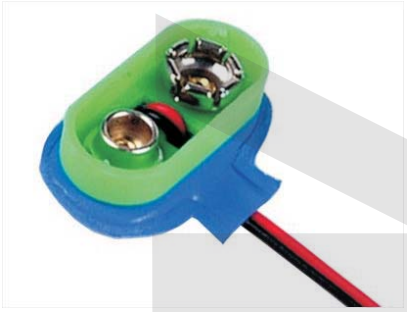

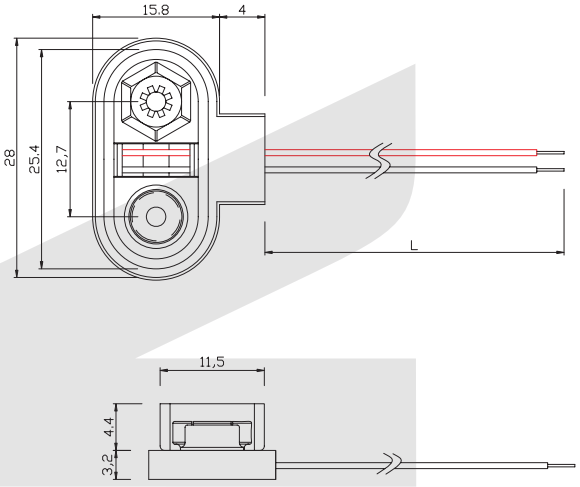

9V Battery seat Series

KLS5-BC9V-04 9V Battery seat Series



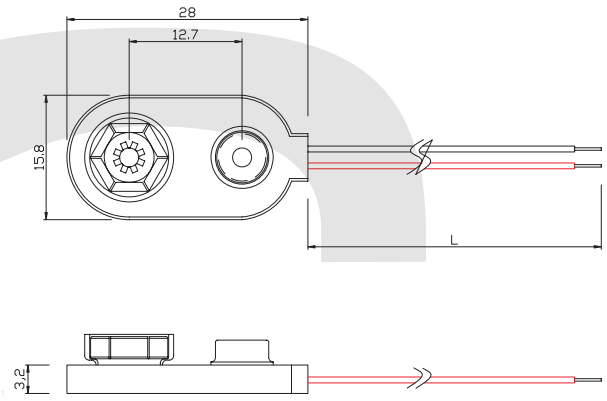

KLS5-BC9V-05 9V Battery seat Series



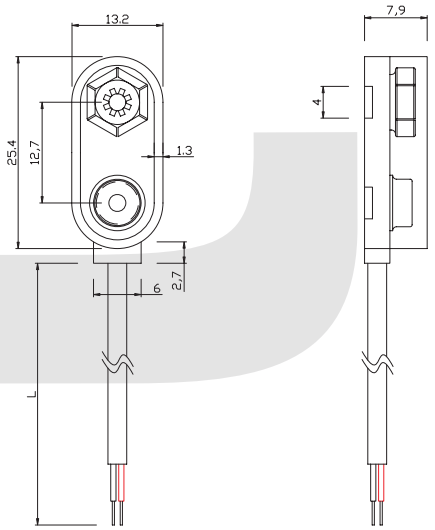

KLS5-BC9V-06 9V Battery seat Series



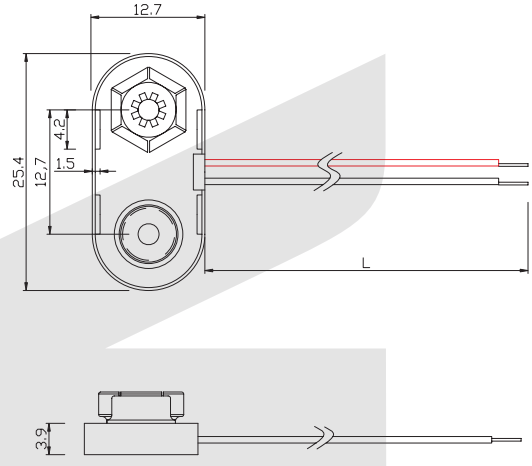

KLS

1-Connectors & Connector Components-Разъемы, соединители и их узлы

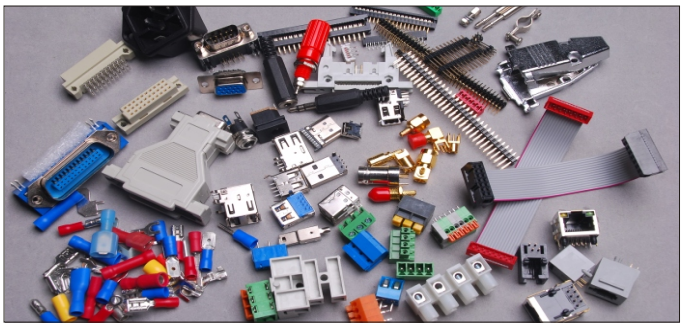

1-1 Wire to Board connectors
1-2 Board to Board connectors
1-3 Input/Output (Box to Box)
1-4 Socket & Card connectors
1-5 Power connectors
1-6 **Audio & Video connectors**
1-7 RF & Coax
1-8 Terminal Blocks & Strips
1-9 Terminals & Splices

More . . .



KLS ELECTRONIC CO; LTD. WWW.CNKLS.COM Email:sales@cnkls.com
Tel:0086 574 86824882 Fax:0086 574 86824882

MONO Plug / Stereo Plug Series

KLS1-PLG-001 (MONO Plug)





ORDER INFORMATION

Product NO. : KLS1-PLG-001

Pos. NO.

Part NO.

KLS's Part No.	Description
KLS1-PLG-001-2.5-N-B	2.5MM MONO plug / Nickel-plated / Black color
KLS1-PLG-001-2.5-G-R	2.5MM MONO plug / Gold-plated / Red color
KLS1-PLG-001-3.5-N-B	3.5MM MONO plug / Nickel-plated / Black color
KLS1-PLG-001-3.5-G-R	3.5MM MONO plug / Gold-plated / Red color
KLS1-PLG-001-6.3-N-B	6.3MM MONO plug / Nickel-plated / Black color
KLS1-PLG-001-6.3-G-R	6.3MM MONO plug / Gold-plated / Red color

Remark: Optional gold-plated nickel And Color Optional

All specification & dimensions are subject to change, Please call your nearest KLS sales represesntative for update information

MONO Plug / Stereo Plug Series

KLS1-PLG-002 (MONO Plug)





ORDER INFORMATION

Product NO. : KLS1-PLG-002

Pos. NO.

Part NO.

KLS's Part No.	Description
KLS1-PLG-002-2.5-N	2.5MM MONO plug / Nickel-plated
KLS1-PLG-002-2.5-G	2.5MM MONO plug / Gold-plated
KLS1-PLG-002-3.5-N	3.5MM MONO plug / Nickel-plated
KLS1-PLG-002-3.5-G	3.5MM MONO plug / Gold-plated
KLS1-PLG-002-6.3-N	6.3MM MONO plug / Nickel-plated
KLS1-PLG-002-6.3-G	6.3MM MONO plug / Gold-plated

Remark: Optional gold-plated nickel

MONO Plug / Stereo Plug Series

KLS1-PLG-004 (MONO Plug)



ORDER INFORMATION

Product NO. : KLS1-PLG-004

Pos. NO.

Part NO.

KLS's Part No.	Description
KLS1-PLG-004-2.5-N-B	2.5MM MONO plug / Nickel-plated / Black color
KLS1-PLG-004-2.5-G-R	2.5MM MONO plug / Gold-plated / Red color
KLS1-PLG-004-3.5-N-B	3.5MM MONO plug / Nickel-plated / Black color
KLS1-PLG-004-3.5-G-R	3.5MM MONO plug / Gold-plated / Red color
KLS1-PLG-004-6.3-N-B	6.3MM MONO plug / Nickel-plated / Black color
KLS1-PLG-004-6.3-G-R	6.3MM MONO plug / Gold-plated / Red color

Remark: Optional gold-plated nickel And Color Optional

All specification & dimensions are subject to change, Please call your nearest KLS sales represesntative for update information

MONO Plug / Stereo Plug Series

KLS1-PLG-005 (MONO Plug)



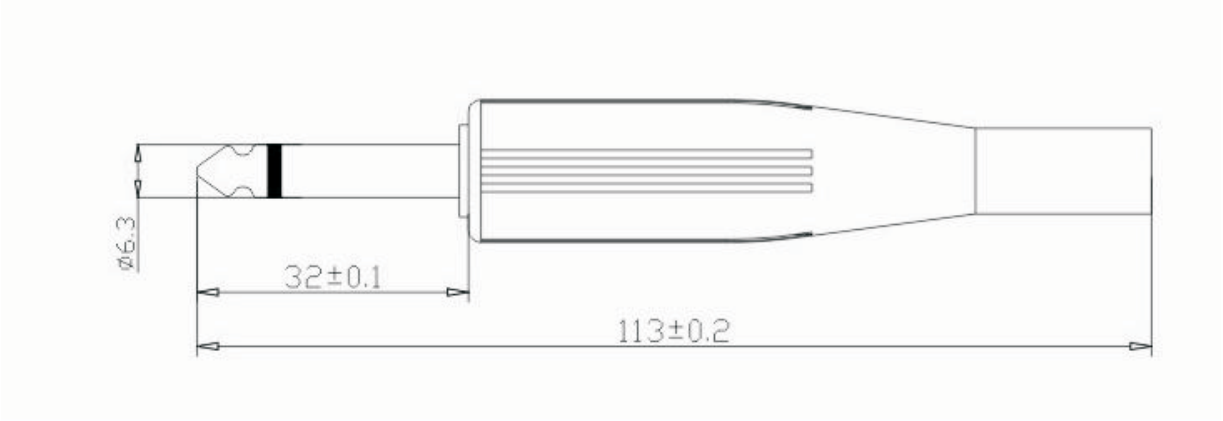

ORDER INFORMATION

Product NO. : KLS1-PLG-005

Pos. NO.

Part NO.

KLS's Part No.	Description
KLS1-PLG-005-6.3-N-B	6.3mm Mono Plug / Nickel-plated / Black color
KLS1-PLG-005-6.3-N-L	6.3mm Mono Plug / Nickel-plated / Blue color
KLS1-PLG-005-6.3-N-R	6.3mm Mono Plug / Nickel-plated / Red color
KLS1-PLG-005-6.3-G-B	6.3mm Mono Plug / Gold-plated / Black color
KLS1-PLG-005-6.3-G-L	6.3mm Mono Plug / Gold-plated / Blue color
KLS1-PLG-005-6.3-G-R	6.3mm Mono Plug / Gold-plated / Red color

Remark: Optional gold-plated nickel And Color Optional

All specification & dimensions are subject to change, Please call your nearest KLS sales represesntative for update information

MONO Plug / Stereo Plug Series

KLS1-PLG-006 (MONO Plug)



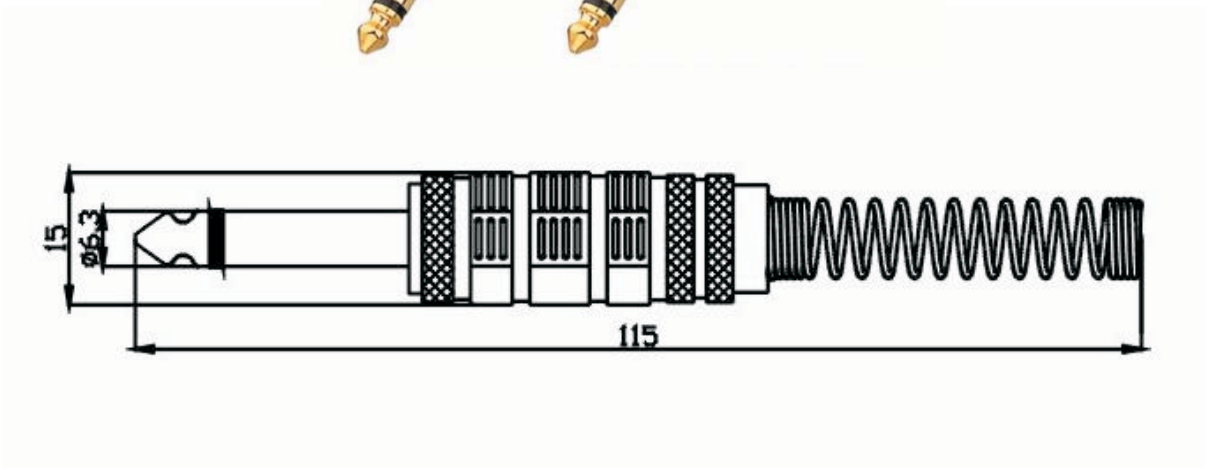

ORDER INFORMATION

Product NO. : KLS1-PLG-006

Pos. NO.

Part NO.

KLS's Part No.	Description
KLS1-PLG-006-6.3-N-B	6.3mm Mono Plug / Nickel-plated / Black color
KLS1-PLG-006-6.3-N-L	6.3mm Mono Plug / Nickel-plated / Blue color
KLS1-PLG-006-6.3-N-R	6.3mm Mono Plug / Nickel-plated / Red color
KLS1-PLG-006-6.3-G-B	6.3mm Mono Plug / Gold-plated / Black color
KLS1-PLG-006-6.3-G-L	6.3mm Mono Plug / Gold-plated / Blue color
KLS1-PLG-006-6.3-G-R	6.3mm Mono Plug / Gold-plated / Red color

Remark: Optional gold-plated nickel And Color Optional

MONO Plug / Stereo Plug Series

KLS1-PLG-007 (MONO Plug)



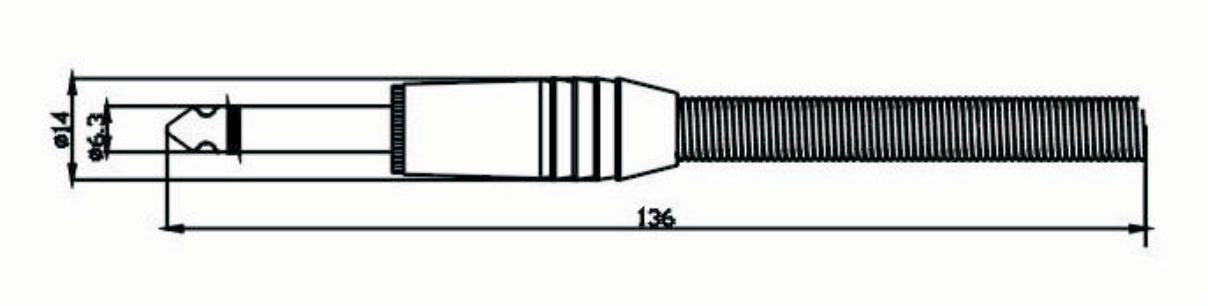

ORDER INFORMATION

Product NO. : KLS1-PLG-007

Pos. NO.

Part NO.

KLS's Part No.	Description
KLS1-PLG-007-6.3-N	6.3mm Mono Plug / Nickel-plated
KLS1-PLG-007-6.3-N	6.3mm Mono Plug / Nickel-plated
KLS1-PLG-007-6.3-N	6.3mm Mono Plug / Nickel-plated
KLS1-PLG-007-6.3-G	6.3mm Mono Plug / Gold-plated
KLS1-PLG-007-6.3-G	6.3mm Mono Plug / Gold-plated
KLS1-PLG-007-6.3-G	6.3mm Mono Plug / Gold-plated

Remark: Optional gold-plated nickel

MONO Plug / Stereo Plug Series

KLS1-PLG-008 (MONO Plug)



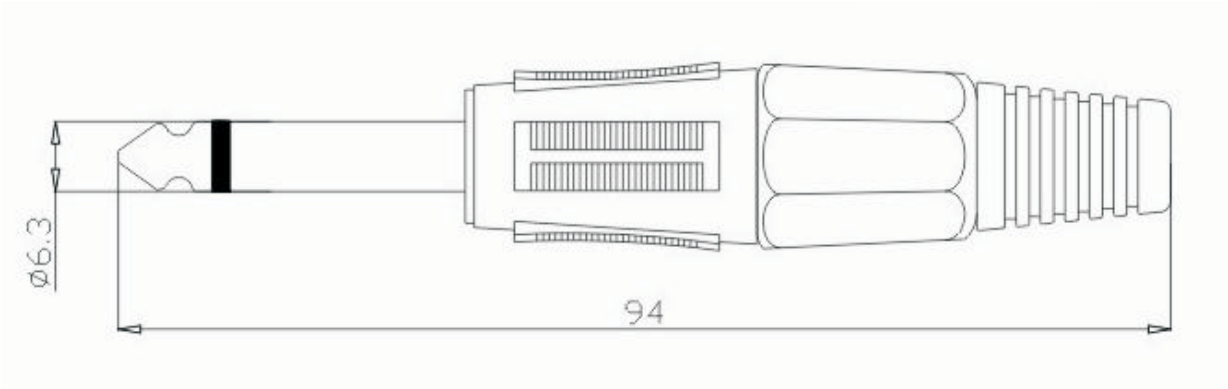

ORDER INFORMATION

Product NO. : KLS1-PLG-008

Pos. NO.

Part NO.

KLS's Part No.	Description
KLS1-PLG-008-6.3A-N-B	6.3mm Mono Plug / Nickel-plated / Black color
KLS1-PLG-008-6.3A-N-L	6.3mm Mono Plug / Nickel-plated / Blue color
KLS1-PLG-008-6.3A-N-R	6.3mm Mono Plug / Nickel-plated / Red color
KLS1-PLG-008-6.3A-G-B	6.3mm Mono Plug / Gold-plated / Black color
KLS1-PLG-008-6.3A-G-L	6.3mm Mono Plug / Gold-plated / Blue color
KLS1-PLG-008-6.3A-G-R	6.3mm Mono Plug / Gold-plated / Red color

Remark: Optional gold-plated nickel And Color Optional

All specification & dimensions are subject to change, Please call your nearest KLS sales represesntative for update information

MONO Plug / Stereo Plug Series

KLS1-PLG-008-6.3B TYPE:



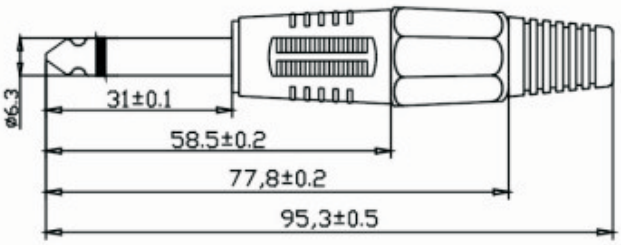

KLS1-PLG-008-6.3C TYPE:



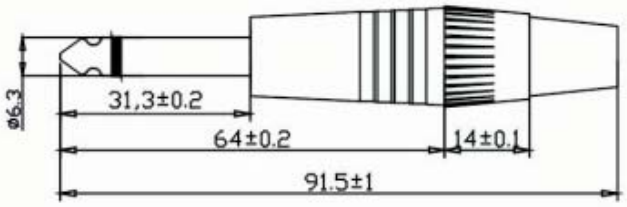

KLS1-PLG-008-6.3D TYPE:



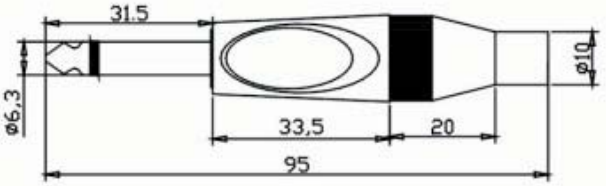

MONO Plug / Stereo Plug Series

KLS1-PLG-009 (MONO Plug)



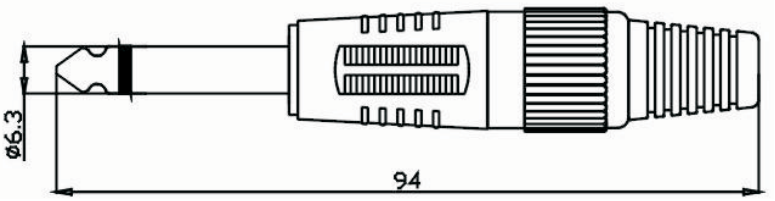

KLS1-PLG-009-6.3B TYPE:



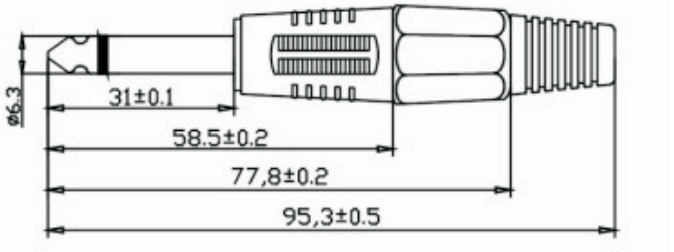

ORDER INFORMATION

Product NO. : KLS1-PLG-009

Pos. NO.

Part NO.

KLS's Part No.	Description
KLS1-PLG-009-6.3A-N-B	6.3mm Mono Plug / Nickel-plated / Black color
KLS1-PLG-009-6.3A-N-L	6.3mm Mono Plug / Nickel-plated / Blue color
KLS1-PLG-009-6.3A-N-R	6.3mm Mono Plug / Nickel-plated / Red color
KLS1-PLG-009-6.3A-G-B	6.3mm Mono Plug / Gold-plated / Black color
KLS1-PLG-009-6.3A-G-L	6.3mm Mono Plug / Gold-plated / Blue color
KLS1-PLG-009-6.3A-G-R	6.3mm Mono Plug / Gold-plated / Red color

Remark: Optional gold-plated nickel And Color Optional

All specification & dimensions are subject to change, Please call your nearest KLS sales represesntative for update information

MONO Plug / Stereo Plug Series

KLS1-PLG-010 (MONO Plug)



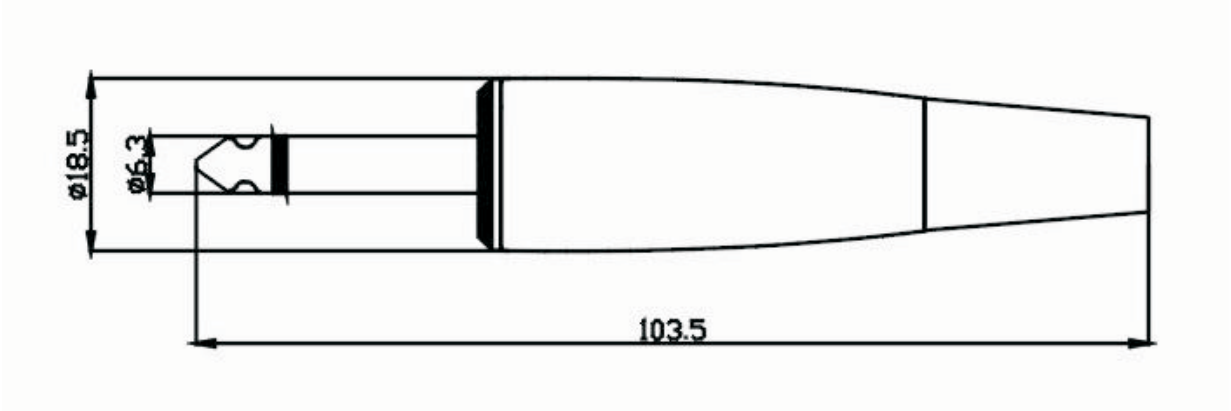

ORDER INFORMATION

Product NO. : KLS1-PLG-010

Pos. NO.

Part NO.

KLS's Part No.	Description
KLS1-PLG-010-6.3-N	6.3mm Mono Plug / Nickel-plated
KLS1-PLG-010-6.3-N	6.3mm Mono Plug / Nickel-plated
KLS1-PLG-010-6.3-N	6.3mm Mono Plug / Nickel-plated
KLS1-PLG-010-6.3-G	6.3mm Mono Plug / Gold-plated
KLS1-PLG-010-6.3-G	6.3mm Mono Plug / Gold-plated
KLS1-PLG-010-6.3-G	6.3mm Mono Plug / Gold-plated

Remark: Optional gold-plated nickel

MONO Plug / Stereo Plug Series

KLS1-PLG-011 (MONO Plug)



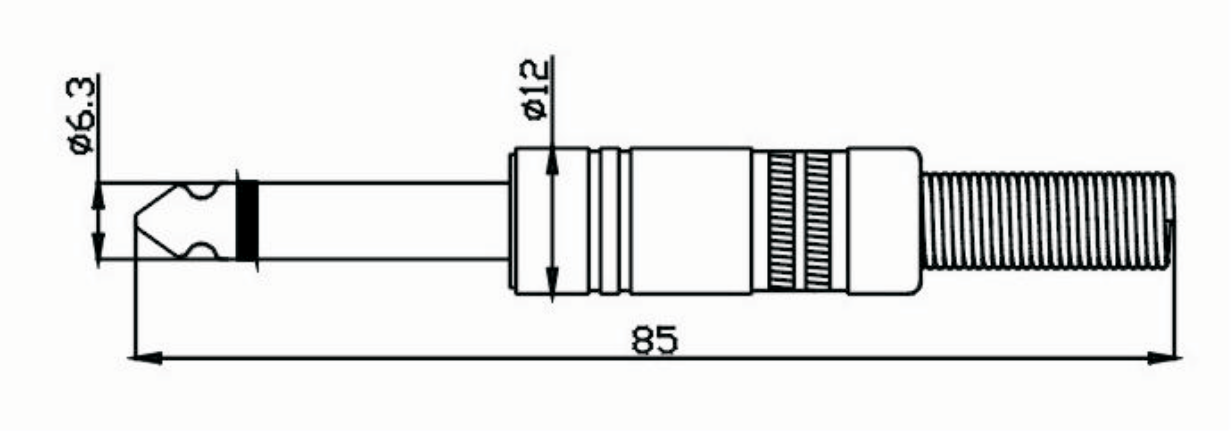

ORDER INFORMATION

Product NO. : KLS1-PLG-011

Pos. NO.

Part NO.

KLS's Part No.	Description
KLS1-PLG-011-2.5A-N	2.5MM MONO plug / Nickel-plated
KLS1-PLG-011-2.5A-G	2.5MM MONO plug / Gold-plated
KLS1-PLG-011-3.5A-N	3.5MM MONO plug / Nickel-plated
KLS1-PLG-011-3.5A-G	3.5MM MONO plug / Gold-plated
KLS1-PLG-011-6.3A-N	6.3MM MONO plug / Nickel-plated
KLS1-PLG-011-6.3A-G	6.3MM MONO plug / Gold-plated

Remark: Optional gold-plated nickel

All specification & dimensions are subject to change, Please call your nearest KLS sales represesntative for update information

MONO Plug / Stereo Plug Series

KLS1-PLR-01 (MONO Plug)



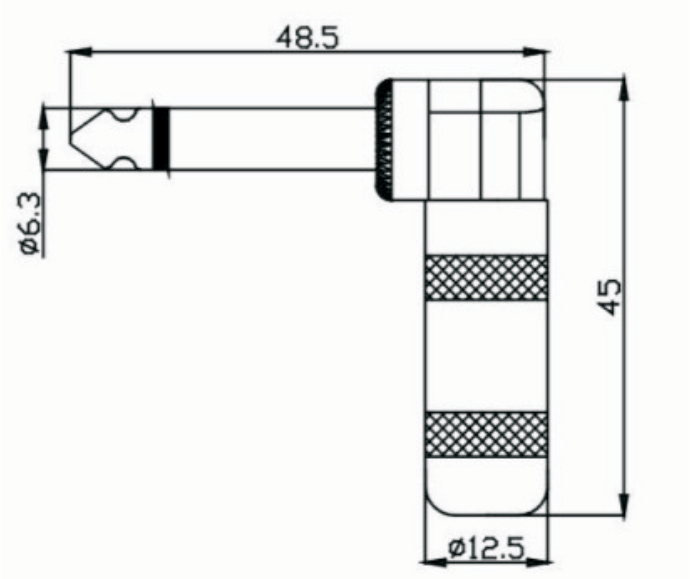

ORDER INFORMATION

Product NO. : KLS1-PLR-01

Pos. NO.

Part NO.

KLS's Part No.	Description
KLS1-PLR-01-6.3-N	6.3mm MONO plug / Nickel-plated
KLS1-PLR-01-6.3-G	6.3mm MONO plug / Gold-plated

Remark: Optional gold-plated nickel

MONO Plug / Stereo Plug Series

KLS1-PLR-02 (MONO Plug)



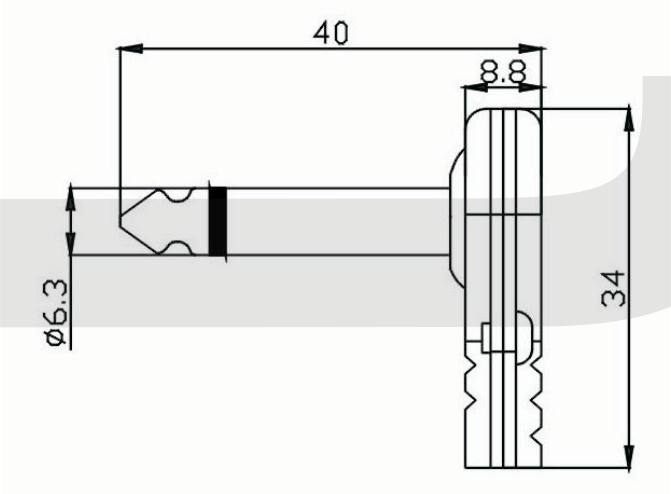

ORDER INFORMATION

Product NO. : KLS1-PLR-02

Pos. NO.

Part NO.

KLS's Part No.	Description
KLS1-PLR-02-6.3-N	6.3mm MONO plug / Nickel-plated
KLS1-PLR-02-6.3-G	6.3mm MONO plug / Gold-plated

Remark: Optional gold-plated nickel

MONO Plug / Stereo Plug Series

KLS1-PLR-03 (MONO Plug)



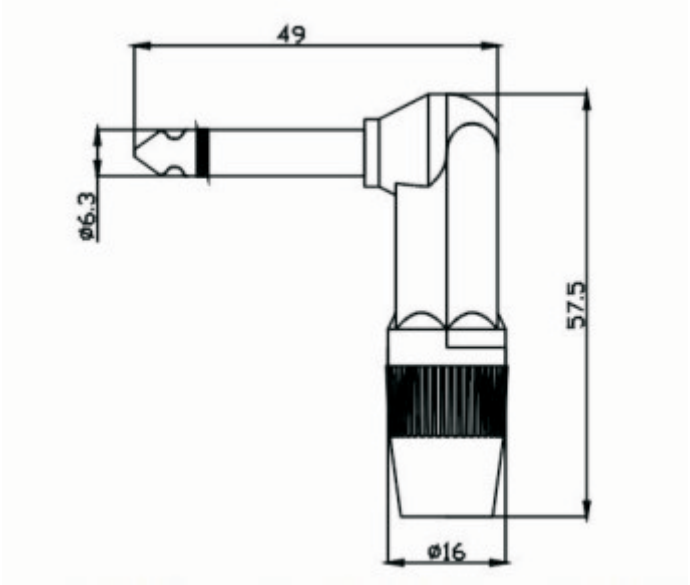

ORDER INFORMATION

Product NO. : KLS1-PLR-03

Pos. NO.

Part NO.

KLS's Part No.	Description
KLS1-PLR-03-6.3-N-B	6.3mm MONO plug / Nickel-plated / Black color
KLS1-PLR-03-6.3-G-L	6.3mm MONO plug / Gold-plated / Blue color

Remark: Optional gold-plated nickel And Color Optional

MONO Plug / Stereo Plug Series

KLS1-PLR-04 (MONO Plug)



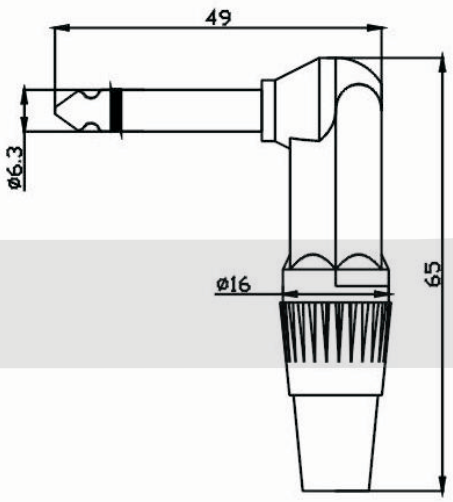

ORDER INFORMATION

Product NO. : KLS1-PLR-04

Pos. NO.

Part NO.

KLS's Part No.	Description
KLS1-PLR-04-6.3-N-B	6.3mm MONO plug / Nickel-plated / Black color
KLS1-PLR-04-6.3-G-L	6.3mm MONO plug / Gold-plated / Blue color

Remark: Optional gold-plated nickel And Color Optional

MONO Plug / Stereo Plug Series

KLS1-PLS-001 (MONO Plug)



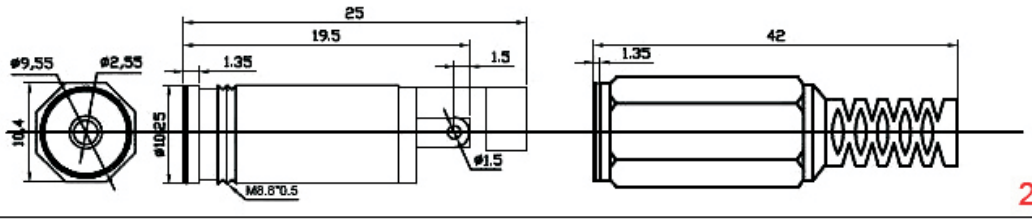

2.50mm

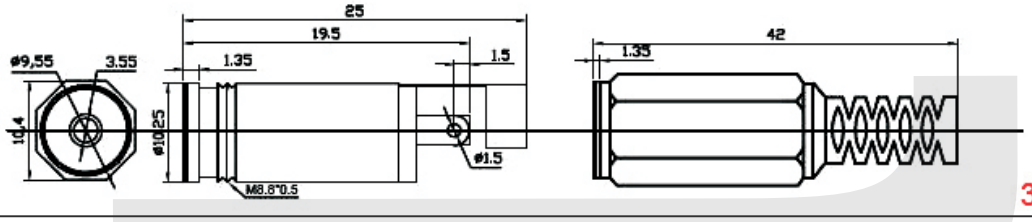

3.50mm

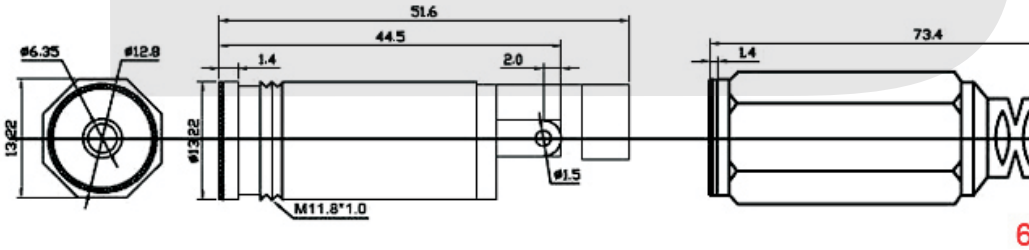

6.35mm

ORDER INFORMATION

Product NO. : KLS1-PLS-001

Pos. NO.

Part NO.

KLS's Part No.	Description
KLS1-PLS-001-2.5-P--B	2.5MM MONO plug socket / Plastic / Black color
KLS1-PLS-001-2.5-M-N	2.5MM MONO plug socket / Metal / Nickel-plated
KLS1-PLS-001-3.5-P-B	3.5MM MONO plug socket / Plastic / Black color
KLS1-PLS-001-3.5-M-N	3.5MM MONO plug socket / Metal / Nickel-plated
KLS1-PLS-001-6.3-P-B	6.3MM MONO plug socket / Plastic / Black color
KLS1-PLS-001-6.3-M-N	6.3MM MONO plug socket / Metal / Nickel-plated

MONO Plug / Stereo Plug Series

KLS1-PLG-001A (Stereo Plug)





ORDER INFORMATION

Product NO. : KLS1-PLG-001A

Pos. NO.

Part NO.

KLS's Part No.	Description
KLS1-PLG-001A-2.5-N-B	2.5MM Stereo plug / Nickel-plated / Black color
KLS1-PLG-001A-2.5-G-R	2.5MM Stereo plug / Gold-plated / Red color
KLS1-PLG-001A-3.5-N-B	3.5MM Stereo plug / Nickel-plated / Black color
KLS1-PLG-001A-3.5-G-R	3.5MM Stereo plug / Gold-plated / Red color
KLS1-PLG-001A-6.3-N-B	6.3MM Stereo plug / Nickel-plated / Black color
KLS1-PLG-001A-6.3-G-R	6.3MM Stereo plug / Gold-plated / Red color

Remark: Optional gold-plated nickel And Color Optional

All specification & dimensions are subject to change, Please call your nearest KLS sales represesntative for update information

MONO Plug / Stereo Plug Series

KLS1-PLG-002A (Stereo Plug)





ORDER INFORMATION

Product NO. : KLS1-PLG-002A

Pos. NO.

Part NO.

KLS's Part No.	Description
KLS1-PLG-002A-2.5-N	2.5MM Stereo plug / Nickel-plated
KLS1-PLG-002A-2.5-G	2.5MM Stereo plug / Gold-plated
KLS1-PLG-002A-3.5-N	3.5MM Stereo plug / Nickel-plated
KLS1-PLG-002A-3.5-G	3.5MM Stereo plug / Gold-plated
KLS1-PLG-002A-6.3-N	6.3MM Stereo plug / Nickel-plated
KLS1-PLG-002A-6.3-G	6.3MM Stereo plug / Gold-plated

Remark: Optional gold-plated nickel

MONO Plug / Stereo Plug Series

KLS1-PLG-004A (Stereo Plug)



ORDER INFORMATION

Product NO. : KLS1-PLG-004A

Pos. NO.

Part NO.

KLS's Part No.	Description
KLS1-PLG-004A-2.5-N-B	2.5MM Stereo plug / Nickel-plated / Black color
KLS1-PLG-004A-2.5-G-R	2.5MM Stereo plug / Gold-plated / Red color
KLS1-PLG-004A-3.5-N-B	3.5MM Stereo plug / Nickel-plated / Black color
KLS1-PLG-004A-3.5-G-R	3.5MM Stereo plug / Gold-plated / Red color
KLS1-PLG-004A-6.3-N-B	6.3MM Stereo plug / Nickel-plated / Black color
KLS1-PLG-004A-6.3-G-R	6.3MM Stereo plug / Gold-plated / Red color

Remark: Optional gold-plated nickel And Color Optional

All specification & dimensions are subject to change, Please call your nearest KLS sales represesntative for update information

MONO Plug / Stereo Plug Series

KLS1-PLG-005A (Stereo Plug)



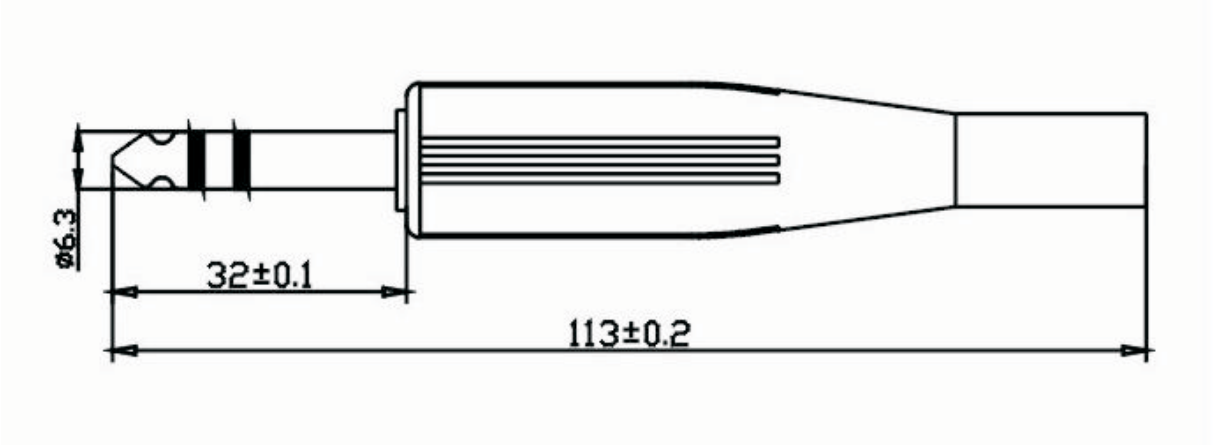

ORDER INFORMATION

Product NO. : KLS1-PLG-005A

Pos. NO.

Part NO.

KLS's Part No.	Description
KLS1-PLG-005A-6.3-N-B	6.3mm Stereo Plug / Nickel-plated / Black color
KLS1-PLG-005A-6.3-N-L	6.3mm Stereo Plug / Nickel-plated / Blue color
KLS1-PLG-005A-6.3-N-R	6.3mm Stereo Plug / Nickel-plated / Red color
KLS1-PLG-005A-6.3-G-B	6.3mm Stereo Plug / Gold-plated / Black color
KLS1-PLG-005A-6.3-G-L	6.3mm Stereo Plug / Gold-plated / Blue color
KLS1-PLG-005A-6.3-G-R	6.3mm Stereo Plug / Gold-plated / Red color

Remark: Optional gold-plated nickel And Color Optional

MONO Plug / Stereo Plug Series

KLS1-PLG-006A (Stereo Plug)



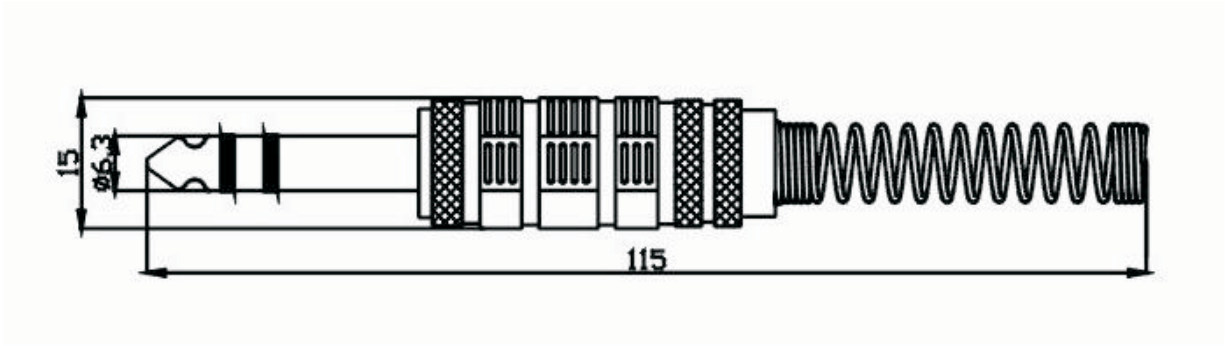

ORDER INFORMATION

Product NO. : KLS1-PLG-006A

Pos. NO.

Part NO.

KLS's Part No.	Description
KLS1-PLG-006A-6.3-N-B	6.3mm Stereo Plug / Nickel-plated / Black color
KLS1-PLG-006A-6.3-N-L	6.3mm Stereo Plug / Nickel-plated / Blue color
KLS1-PLG-006A-6.3-N-R	6.3mm Stereo Plug / Nickel-plated / Red color
KLS1-PLG-006A-6.3-G-B	6.3mm Stereo Plug / Gold-plated / Black color
KLS1-PLG-006A-6.3-G-L	6.3mm Stereo Plug / Gold-plated / Blue color
KLS1-PLG-006A-6.3-G-R	6.3mm Stereo Plug / Gold-plated / Red color

Remark: Optional gold-plated nickel And Color Optional

MONO Plug / Stereo Plug Series

KLS1-PLG-007A (Stereo Plug)



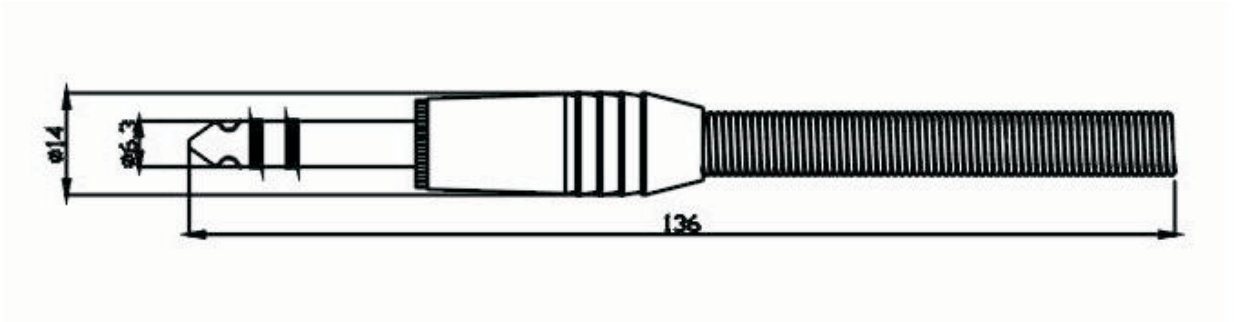

ORDER INFORMATION

Product NO. : KLS1-PLG-007A

Pos. NO.

Part NO.

KLS's Part No.	Description
KLS1-PLG-007A-6.3-N	6.3mm Stereo Plug / Nickel-plated
KLS1-PLG-007A-6.3-N	6.3mm Stereo Plug / Nickel-plated
KLS1-PLG-007A-6.3-N	6.3mm Stereo Plug / Nickel-plated
KLS1-PLG-007A-6.3-G	6.3mm Stereo Plug / Gold-plated
KLS1-PLG-007A-6.3-G	6.3mm Stereo Plug / Gold-plated
KLS1-PLG-007A-6.3-G	6.3mm Stereo Plug / Gold-plated

Remark: Optional gold-plated nickel

MONO Plug / Stereo Plug Series

KLS1-PLG-008A (Stereo Plug)



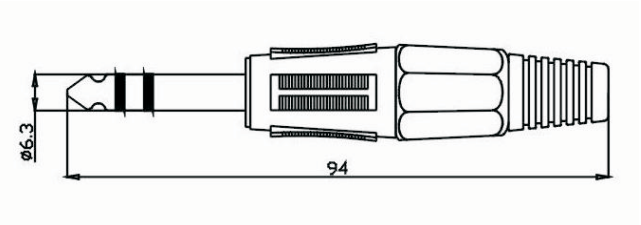

KLS1-PLG-008A-6.3B TYPE:



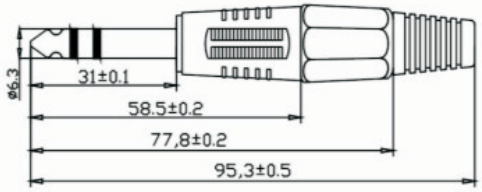

KLS1-PLG-008A-6.3C TYPE:



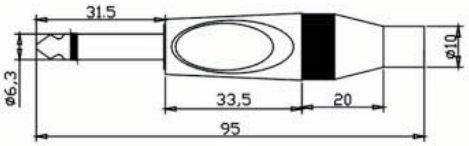

ORDER INFORMATION

Product NO. : KLS1-PLG-008

Pos. NO.

Part NO.

KLS's Part No.	Description
KLS1-PLG-008A-6.3A-N-B	6.3mm Stereo Plug / Nickel-plated / Black color
KLS1-PLG-008A-6.3A-N-L	6.3mm Stereo Plug / Nickel-plated / Blue color
KLS1-PLG-008A-6.3A-N-R	6.3mm Stereo Plug / Nickel-plated / Red color
KLS1-PLG-008A-6.3A-G-B	6.3mm Stereo Plug / Gold-plated / Black color
KLS1-PLG-008A-6.3A-G-L	6.3mm Stereo Plug / Gold-plated / Blue color
KLS1-PLG-008A-6.3A-G-R	6.3mm Stereo Plug / Gold-plated / Red color

Remark: Optional gold-plated nickel And Color Optional

MONO Plug / Stereo Plug Series

KLS1-PLG-009A (Stereo Plug)



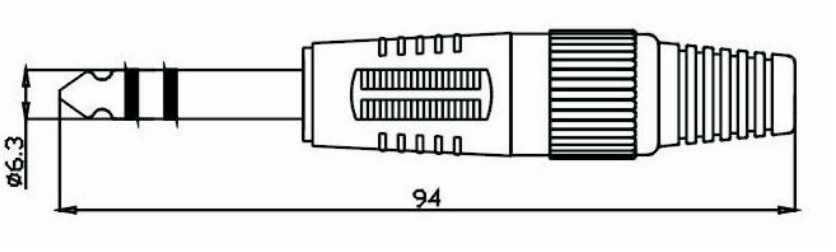

KLS1-PLG-009A-6.3B TYPE:



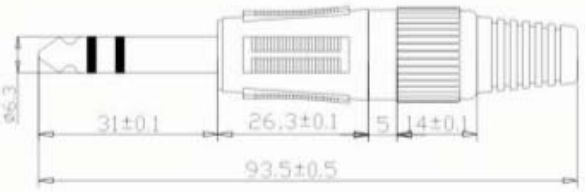

ORDER INFORMATION

Product NO. : KLS1-PLG-009A

Pos. NO.

Part NO.

KLS's Part No.	Description
KLS1-PLG-009A-6.3A-N-B	6.3mm Stereo Plug / Nickel-plated / Black color
KLS1-PLG-009A-6.3A-N-L	6.3mm Stereo Plug / Nickel-plated / Blue color
KLS1-PLG-009A-6.3A-N-R	6.3mm Stereo Plug / Nickel-plated / Red color
KLS1-PLG-009A-6.3A-G-B	6.3mm Stereo Plug / Gold-plated / Black color
KLS1-PLG-009A-6.3A-G-L	6.3mm Stereo Plug / Gold-plated / Blue color
KLS1-PLG-009A-6.3A-G-R	6.3mm Stereo Plug / Gold-plated / Red color

Remark: Optional gold-plated nickel And Color Optional

All specification & dimensions are subject to change, Please call your nearest KLS sales represesntative for update information

MONO Plug / Stereo Plug Series

KLS1-PLG-010A (Stereo Plug)



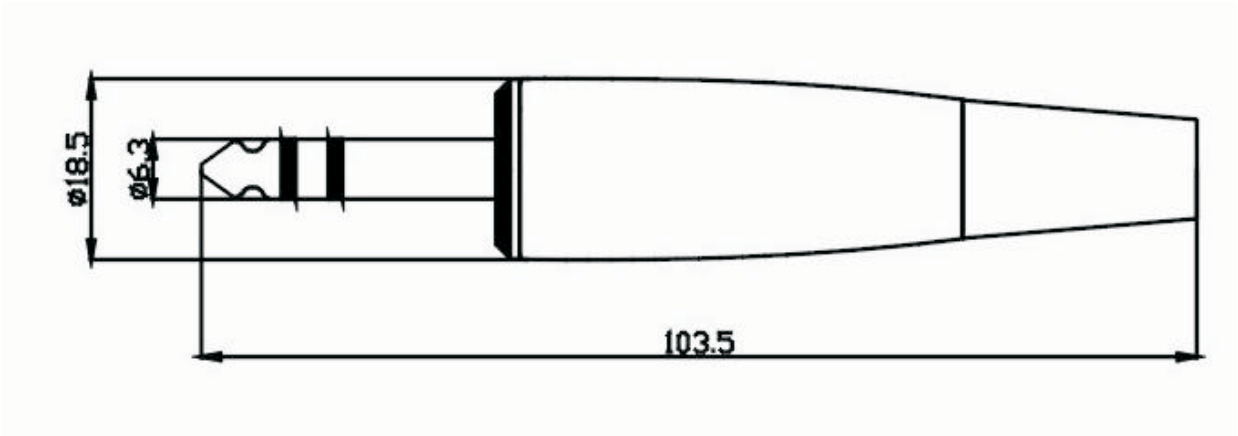

ORDER INFORMATION

Product NO. : KLS1-PLG-010A

Pos. NO.

Part NO.

KLS's Part No.	Description
KLS1-PLG-010A-6.3-N	6.3mm Stereo Plug / Nickel-plated
KLS1-PLG-010A-6.3-N	6.3mm Stereo Plug / Nickel-plated
KLS1-PLG-010A-6.3-N	6.3mm Stereo Plug / Nickel-plated
KLS1-PLG-010A-6.3-G	6.3mm Stereo Plug / Gold-plated
KLS1-PLG-010A-6.3-G	6.3mm Stereo Plug / Gold-plated
KLS1-PLG-010A-6.3-G	6.3mm Stereo Plug / Gold-plated

Remark: Optional gold-plated nickel

MONO Plug / Stereo Plug Series

KLS1-PLG-011A (Stereo Plug)



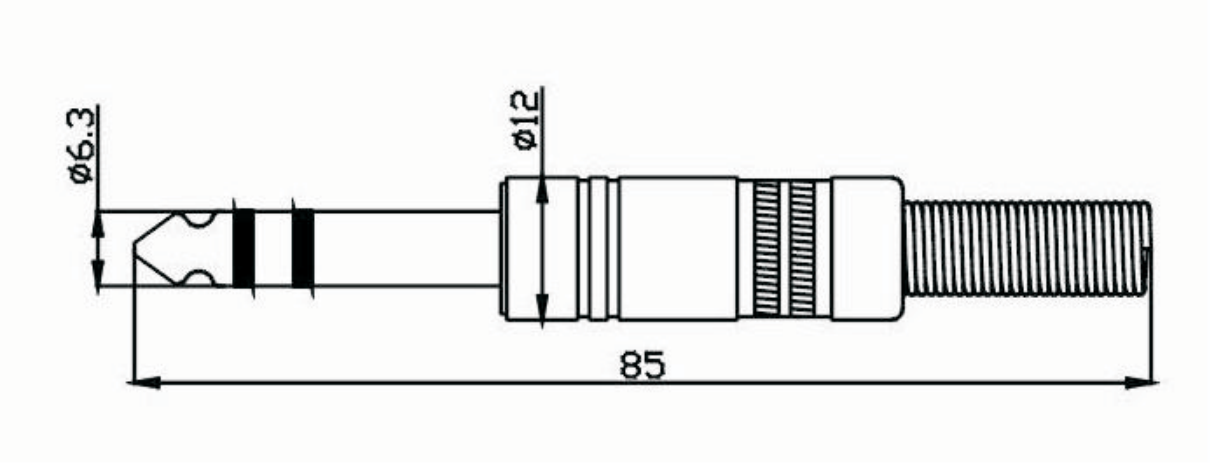

ORDER INFORMATION

Product NO. : KLS1-PLG-011

Pos. NO.

Part NO.

KLS's Part No.	Description
KLS1-PLG-011A-2.5A-N	2.5MM Stereo Plug / Nickel-plated
KLS1-PLG-011A-2.5A-G	2.5MM Stereo Plug / Gold-plated
KLS1-PLG-011A-3.5A-N	3.5MM Stereo Plug / Nickel-plated
KLS1-PLG-011A-3.5A-G	3.5MM Stereo Plug / Gold-plated
KLS1-PLG-011A-6.3A-N	6.3MM Stereo Plug / Nickel-plated
KLS1-PLG-011A-6.3A-G	6.3MM Stereo Plug / Gold-plated

Remark: Optional gold-plated nickel

MONO Plug / Stereo Plug Series

KLS1-PLG-012A (Stereo Plug)



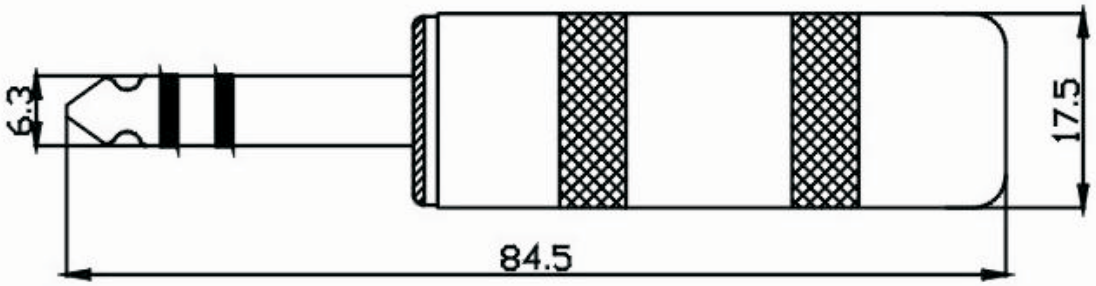

ORDER INFORMATION

Product NO. : KLS1-PLG-012A

Pos. NO.

Part NO.

KLS's Part No.	Description
KLS1-PLG-012A-2.5A-N	2.5MM Stereo Plug / Nickel-plated
KLS1-PLG-012A-2.5A-G	2.5MM Stereo Plug / Gold-plated
KLS1-PLG-012A-3.5A-N	3.5MM Stereo Plug / Nickel-plated
KLS1-PLG-012A-3.5A-G	3.5MM Stereo Plug / Gold-plated
KLS1-PLG-012A-6.3A-N	6.3MM Stereo Plug / Nickel-plated
KLS1-PLG-012A-6.3A-G	6.3MM Stereo Plug / Gold-plated

Remark: Optional gold-plated nickel

MONO Plug / Stereo Plug Series

KLS1-PLR-01A (Stereo Plug)



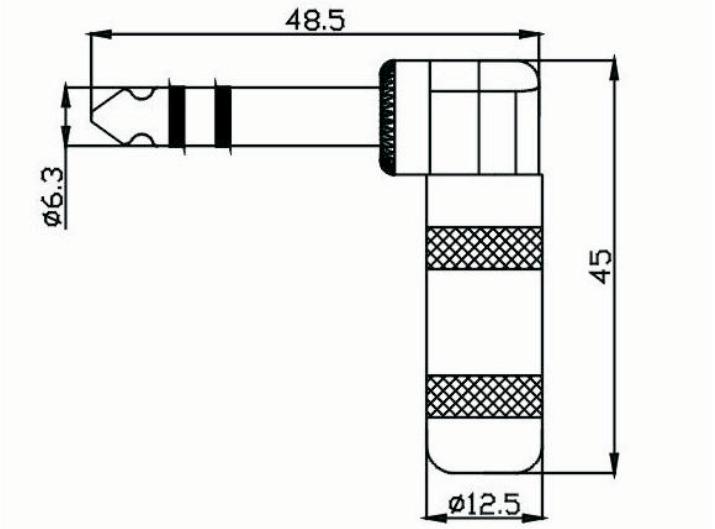

ORDER INFORMATION

Product NO. : KLS1-PLR-01A

Pos. NO.

Part NO.

KLS's Part No.	Description
KLS1-PLR-01A-6.3-N	6.3mm Stereo Plug / Nickel-plated
KLS1-PLR-01A-6.3-G	6.3mm Stereo Plug / Gold-plated

Remark: Optional gold-plated nickel

MONO Plug / Stereo Plug Series

KLS1-PLR-02A (Stereo Plug)



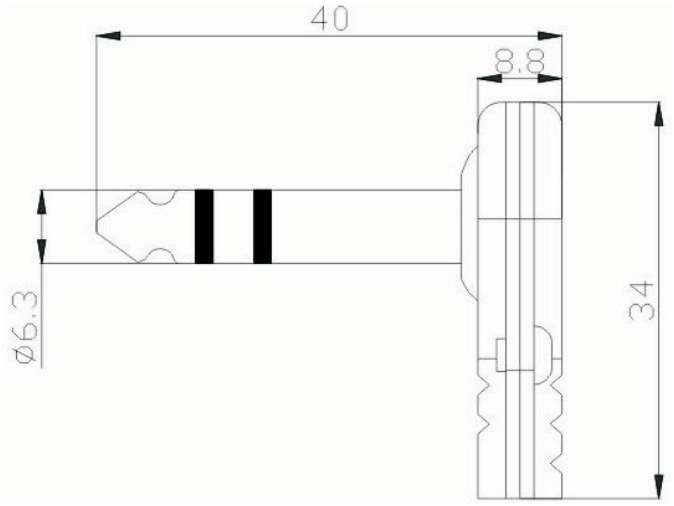

ORDER INFORMATION

Product NO. : KLS1-PLR-02A

Pos. NO.

Part NO.

KLS's Part No.	Description
KLS1-PLR-02A-6.3-N	6.3mm Stereo Plug / Nickel-plated
KLS1-PLR-02A-6.3-G	6.3mm Stereo Plug / Gold-plated

Remark: Optional gold-plated nickel

MONO Plug / Stereo Plug Series

KLS1-PLS-001A (Stereo Plug)



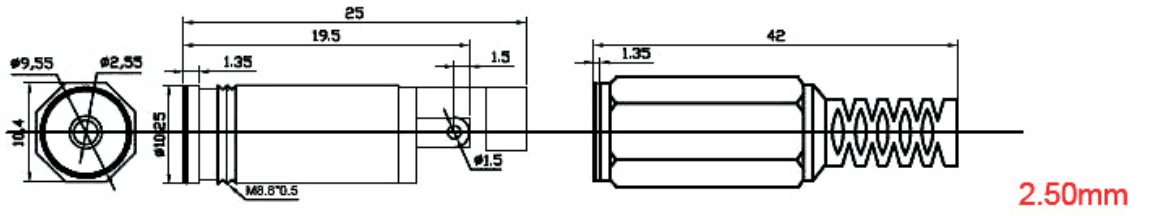

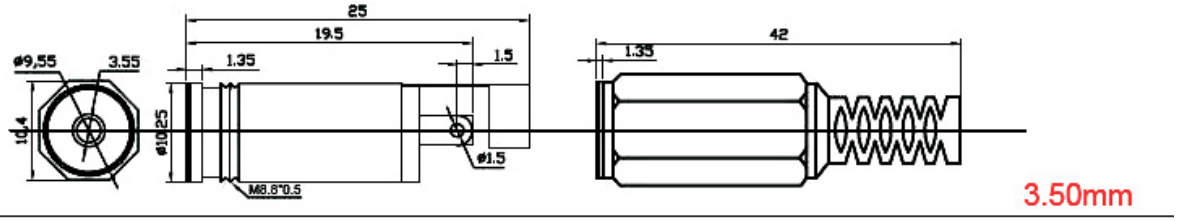

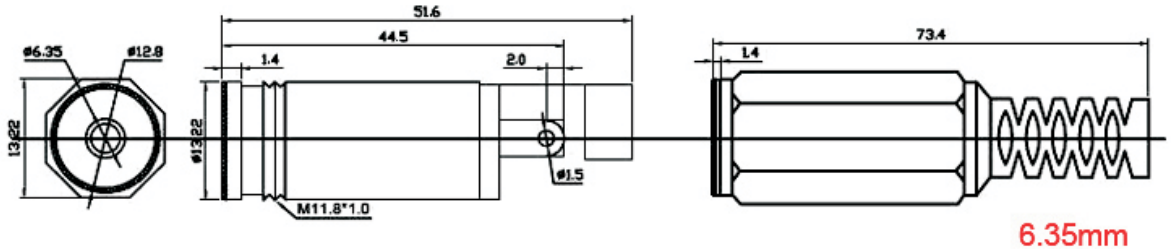

ORDER INFORMATION

Product NO. : KLS1-PLS-001A

Pos. NO.

Part NO.

KLS's Part No.	Description
KLS1-PLS-001A-2.5-P--B	2.5MM Stereo plug socket / Plastic / Black color
KLS1-PLS-001A-2.5-M-N	2.5MM Stereo plug socket / Metal / Nickel-plated
KLS1-PLS-001A-3.5-P-B	3.5MM Stereo plug socket / Plastic / Black color
KLS1-PLS-001A-3.5-M-N	3.5MM Stereo plug socket / Metal / Nickel-plated
KLS1-PLS-001A-6.3-P-B	6.3MM Stereo plug socket / Plastic / Black color
KLS1-PLS-001A-6.3-M-N	6.3MM Stereo plug socket / Metal / Nickel-plated

MONO Plug / Stereo Plug Series

KLS1-PLG-003 (Stereo Plug)



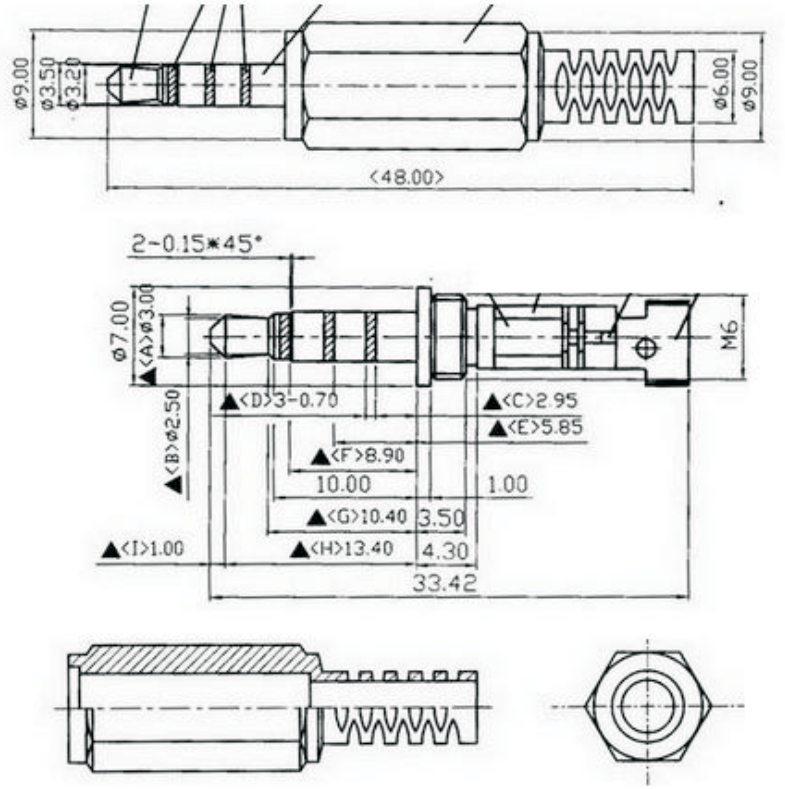

ORDER INFORMATION

Product NO. : KLS1-PLG-003

Pos. NO.

Part NO.

KLS's Part No.	Description
KLS1-PLG-003-2.5-N-B	2.5MM Stereo plug / Nickel-plated / Black color
KLS1-PLG-003-2.5-G-R	2.5MM Stereo plug / Gold-plated / Red color
KLS1-PLG-003-3.5-N-B	3.5MM Stereo plug / Nickel-plated / Black color
KLS1-PLG-003-3.5-G-R	3.5MM Stereo plug / Gold-plated / Red color
KLS1-PLG-003-6.3-N-B	6.3MM Stereo plug / Nickel-plated / Black color
KLS1-PLG-003-6.3-G-R	6.3MM Stereo plug / Gold-plated / Red color

Remark: Optional gold-plated nickel And Color Optional

2.5mm Mono Jack * Stereo Jack Series

KLS1-TG-2.5-001A (Dip Mono Jack)

Housing Material / Center Pin Material	PBT / Brass
Rated Load	DC 12V 0.5A Max
Contact resistance	⩽0.03Ω
Insulation resistance	⩾100MΩ
Withstand voltage	AC 500V(50Hz) 1min
Actuating Force	2.2~20N
Life	5000Time



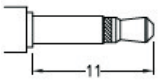

ø2.5 MATE PLUG

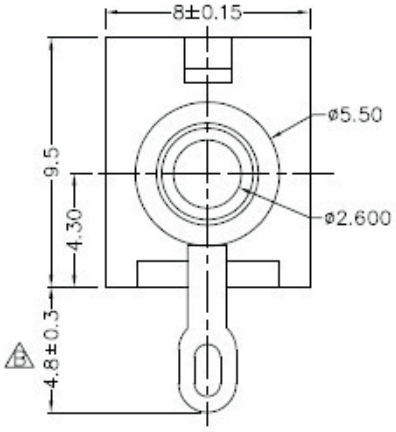

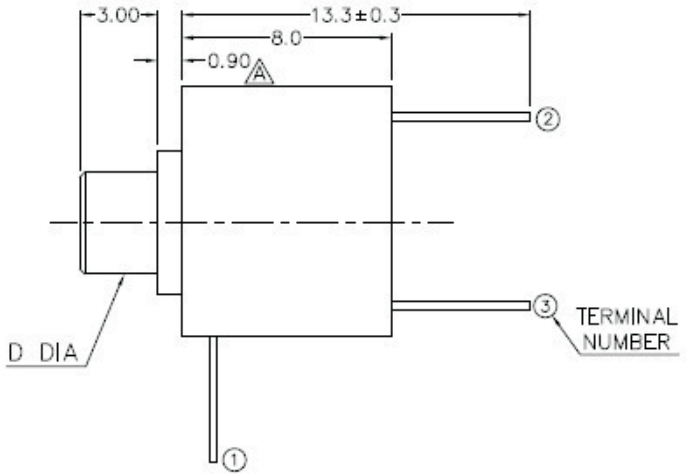

MODEL NO.	TG-25N	TG-25F
D DIA	THREADED	FLASHED
	M4X0.5	ø4.0
SCHEMATIC	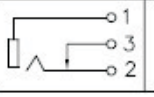	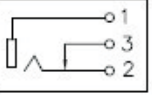

✳ MATERIAL

TERMINAL 1 : BRASS
TERMINAL 2 : COPPER ALLOY
TERMINAL 3 : BRASS
BUSHING : BRASS
HOUSING : PBT

ORDER INFORMATION

Product No. : KLS1-TG-2.5-001A

Pos. NO.
Series NO.

2.5mm Mono Jack * Stereo Jack Series

KLS1-TG-2.5-002A (Dip Mono Jack)

Housing Material / Center Pin Material	PBT / Brass
Rated Load	DC 12V 0.5A Max
Contact resistance	⩽0.03Ω
Insulation resistance	⩾100MΩ
Withstand voltage	AC 500V(50Hz) 1min
Actuating Force	2.2~20N
Life	5000Time



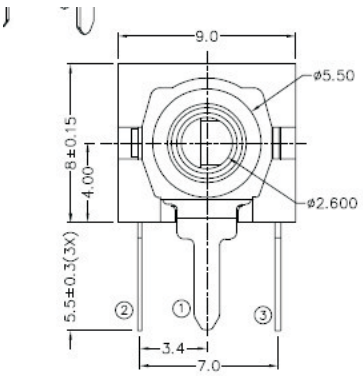

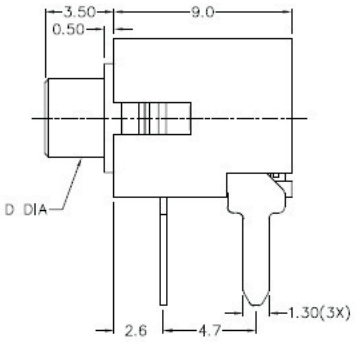

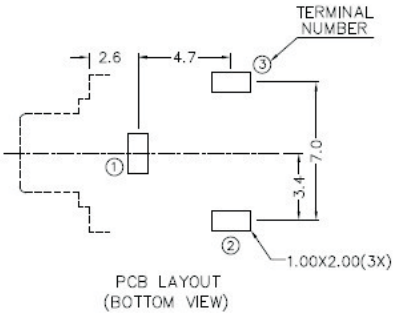

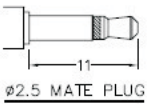

✳ MATERIAL

TERMINAL 1	: BRASS
TERMINAL 2	: COPPER ALLOY
TERMINAL 3	: BRASS
BUSHING	: BRASS
HOUSING	: PBT

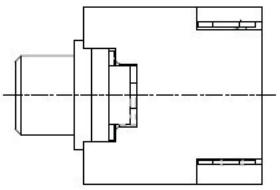

MODEL NO.	TG-256N	TG-256F
D DIA	THREADED	FLASHED
	M4X0.5	ø4.0
SCHEMATIC		

ORDER INFORMATION

Product No. : KLS1-TG-2.5-002A

Pos. NO.

Series NO.

2.5mm Mono Jack * Stereo Jack Series

KLS1-TG-2.5-003A (Dip Mono Jack)

Housing Material / Center Pin Material	PBT / Brass
Rated Load	DC 12V 0.5A Max
Contact resistance	⩽0.03Ω
Insulation resistance	⩾100MΩ
Withstand voltage	AC 500V(50Hz) 1min
Actuating Force	2.2~20N
Life	5000Time



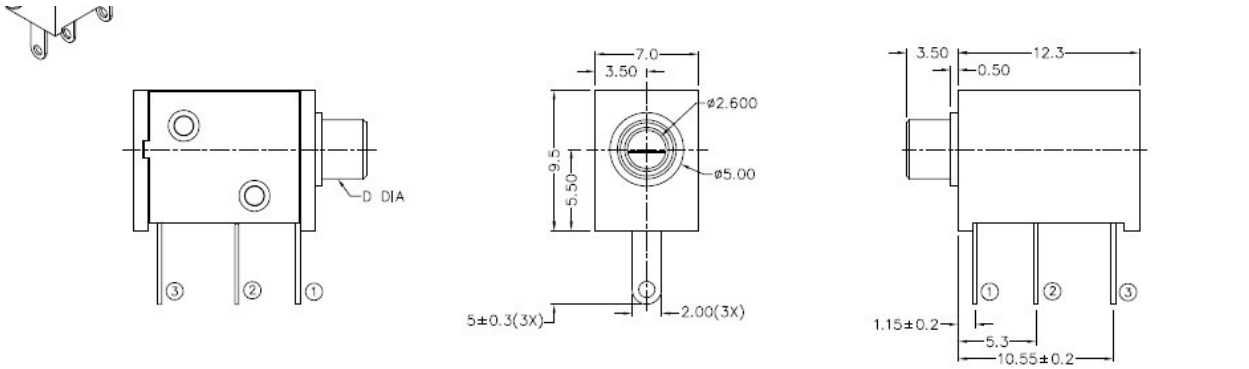

MODEL NO.	TG-402N	TG-402F
D DIA	THREADED M4X0.5	FLASHED ø4.0
SCHEMATIC	1 3 2	1 3 2

* MATERIAL

TERMINAL 1	:BRASS
TERMINAL 2	:COPPER ALLOY
TERMINAL 3	:BRASS
BUSHING	:BRASS
HOUSING	:PBT
COVER	:PBT

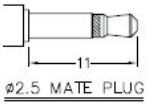

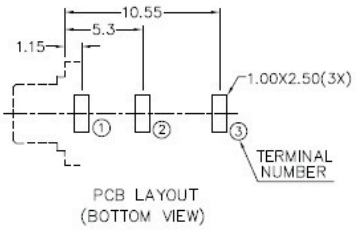

ORDER INFORMATION

Product No. : KLS1-TG-2.5-003A

Pos. NO.

Series NO.

I

2.5mm Mono Jack * Stereo Jack Series

KLS1-TG-2.5-004A (Dip Mono Jack)

Housing Material / Center Pin Material	PBT / Brass
Rated Load	DC 12V 0.5A Max
Contact resistance	⩽0.03Ω
Insulation resistance	⩾100MΩ
Withstand voltage	AC 500V(50Hz) 1min
Actuating Force	2.2~20N
Life	5000Time



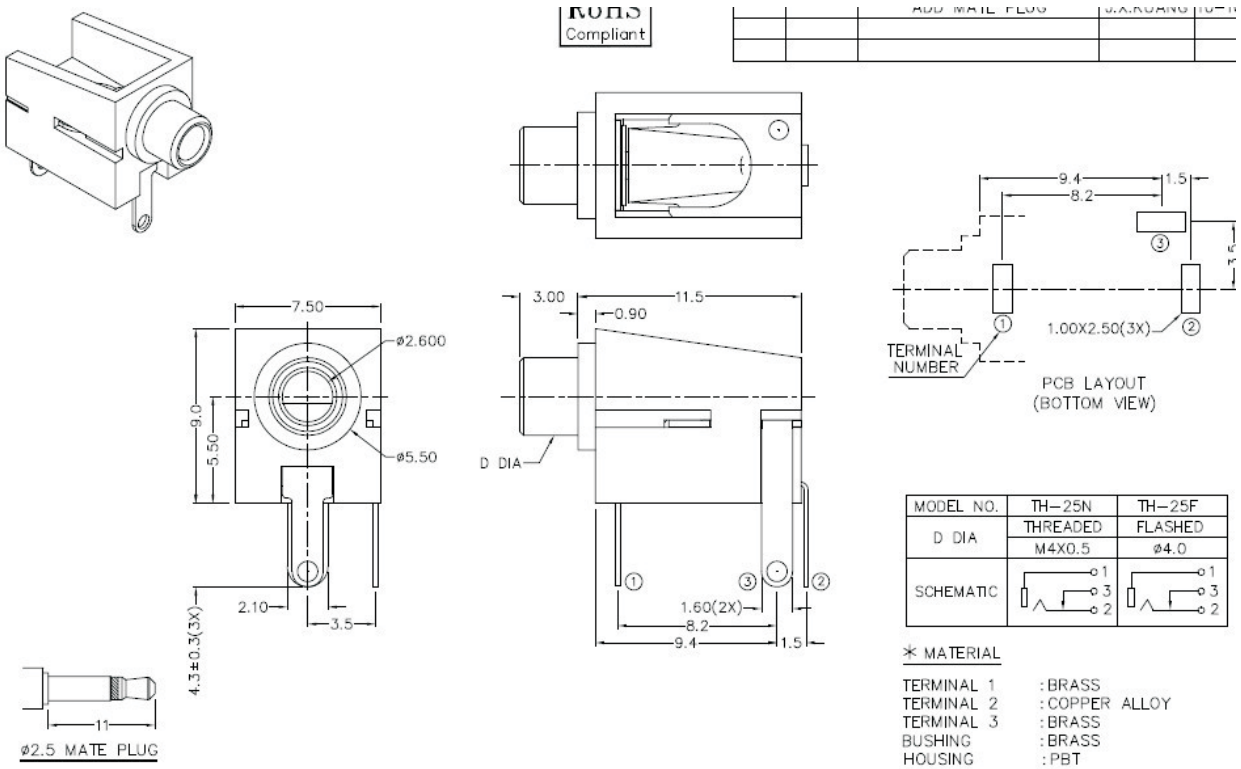

MODEL NO.	TH-25N	TH-25F
D DIA	THREADED M4X0.5	FLASHED ø4.0
SCHEMATIC	1 3 2	1 3 2

* MATERIAL

TERMINAL 1	:BRASS
TERMINAL 2	:COPPER ALLOY
TERMINAL 3	:BRASS
BUSHING	:BRASS
HOUSING	:PBT

ORDER INFORMATION

Product No. : KLS1-TG-2.5-004A

Pos. NO.

Series NO.

2.5mm Mono Jack * Stereo Jack Series

KLS1-TG-2.5-005A (Dip Mono Jack)

Housing Material / Center Pin Material	PBT / Brass
Rated Load	DC 12V 0.5A Max
Contact resistance	⩽0.03Ω
Insulation resistance	⩾100MΩ
Withstand voltage	AC 500V(50Hz) 1min
Actuating Force	2.2~20N
Life	5000Time



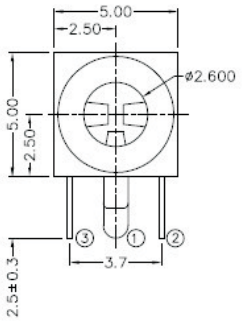

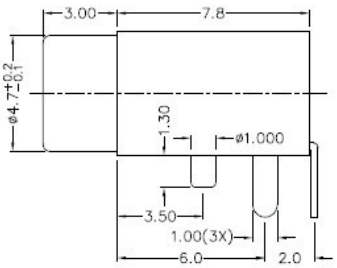

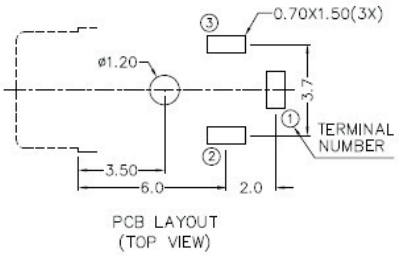

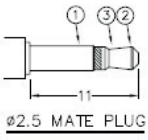

MODEL NO.	TG-252
SCHEMATIC	3 2 1

✳ MATERIAL

TERMINAL 1 : COPPER ALLOY
TERMINAL 2 : COPPER ALLOY
TERMINAL 3 : COPPER ALLOY
HOUSING : PBT

ORDER INFORMATION

Product No. : KLS1-TG-2.5-005A

Pos. NO.

Series NO.

2.5mm Mono Jack * Stereo Jack Series

KLS1-TG-2.5-006A (Dip Mono Jack)

Housing Material / Center Pin Material	PBT / Brass
Rated Load	DC 12V 0.5A Max
Contact resistance	⩽0.03Ω
Insulation resistance	⩾100MΩ
Withstand voltage	AC 500V(50Hz) 1min
Actuating Force	2.2~20N
Life	5000Time



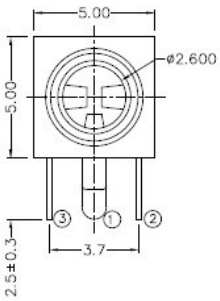

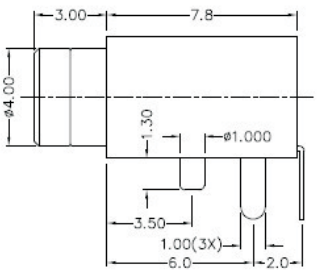

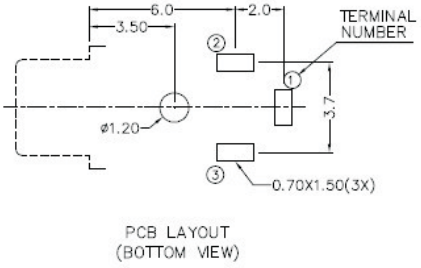

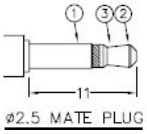

MODEL NO.	TG-253
SCHEMATIC	3 2 1

✳ MATERIAL

TERMINAL 1 : COPPER ALLOY
TERMINAL 2 : COPPER ALLOY
TERMINAL 3 : COPPER ALLOY
BUSHING : BRASS
HOUSING : PBT

KLS1-TG-2.5-006B:

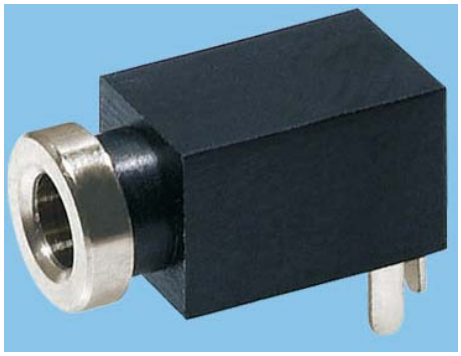

ORDER INFORMATION

Product No. : KLS1-TG-2.5-006A

Pos. NO.
Series NO.

2.5mm Mono Jack * Stereo Jack Series

KLS1-TSJ-2.1-001A (Dip Stereo Jack)

Housing Material / Center Pin Material	PBT / Brass
Rated Load	DC 12V 0.5A Max
Contact resistance	⩽0.03Ω
Insulation resistance	⩾100MΩ
Withstand voltage	AC 500V(50Hz) 1min
Actuating Force	2.2~20N
Life	5000Time



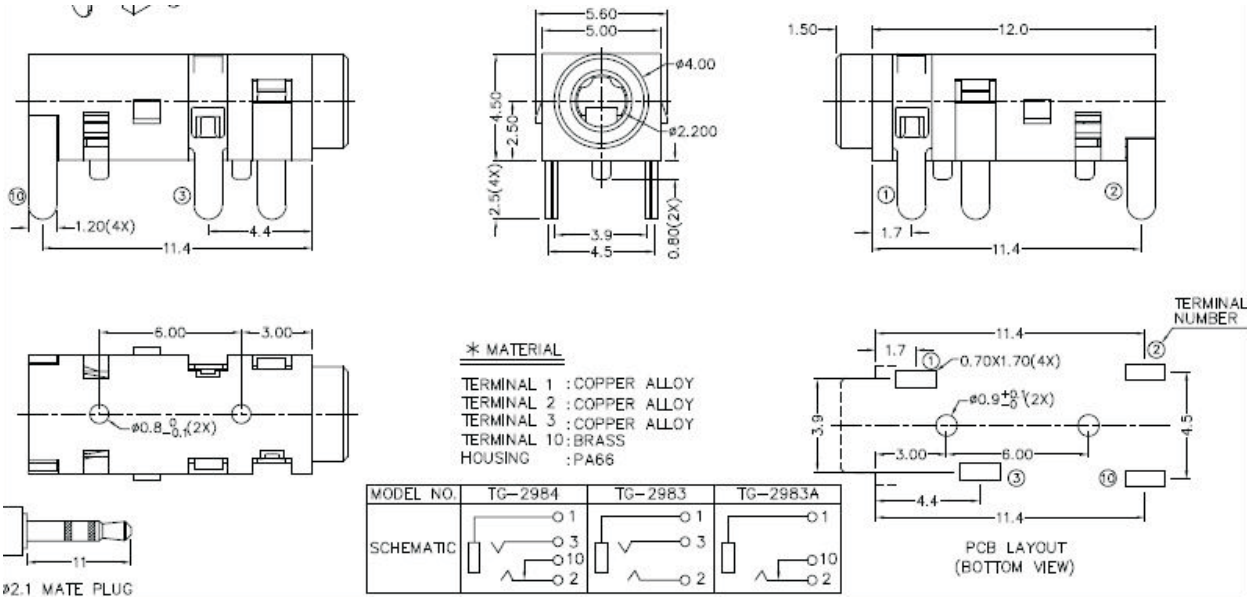

ORDER INFORMATION

Product No. : KLS1-TSJ-2.1-001A

Pos. NO.

Series NO.

2.5mm Mono Jack * Stereo Jack Series

KLS1-TSJ-2.5-001A (Dip Stereo Jack)

Housing Material / Center Pin Material	PA66 / Brass
Rated Load	DC 12V 1A Max
Contact resistance	⩽0.03Ω
Insulation resistance	⩾100MΩ
Withstand voltage	AC 500V(50Hz) 1min
Actuating Force	3~20N
Life	5000Time



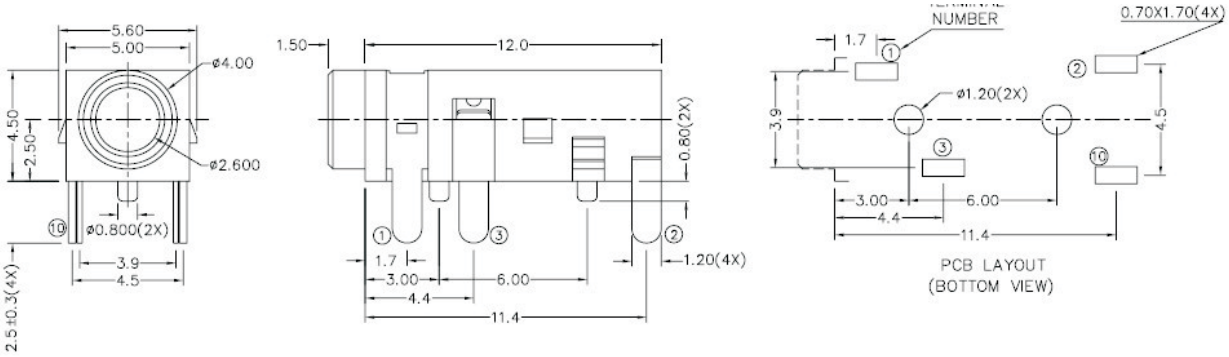

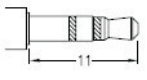

MODEL NO.	TG-2583A	TG-2583	TG-2584
SCHEMATIC	1, 10, 2	1, 3, 2	1, 3, 10, 2

✳ MATERIAL

TERMINAL 1 : COPPER ALLOY
TERMINAL 2 : COPPER ALLOY
TERMINAL 3 : COPPER ALLOY
TERMINAL 10 : BRASS
HOUSING : PA66

ORDER INFORMATION

Product No. : KLS1-TSJ-2.5-001A

Pos. NO.
Series NO.

2.5mm Mono Jack * Stereo Jack Series

KLS1-TSJ-2.5-002A (Dip Stereo Jack)

Housing Material / Center Pin Material	PA66 / Brass
Rated Load	DC 12V 1A Max
Contact resistance	⩽0.03Ω
Insulation resistance	⩾100MΩ
Withstand voltage	AC 500V(50Hz) 1min
Actuating Force	3~20N
Life	5000Time

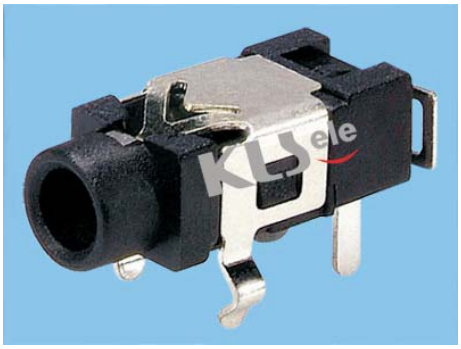

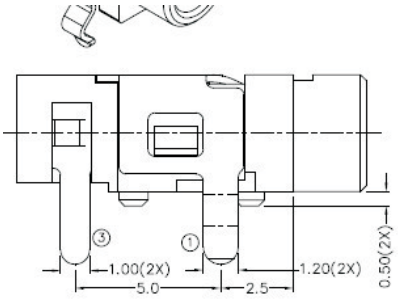

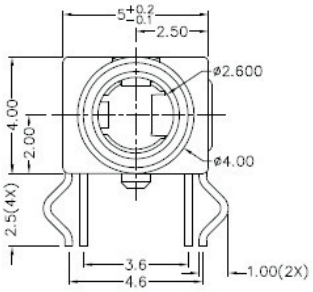

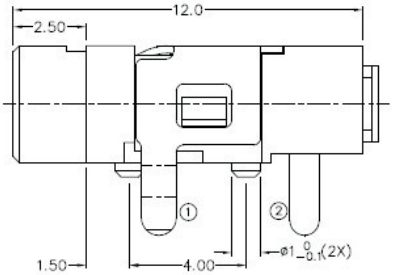

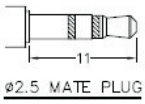

MODEL NO.	TC-2803
SCHEMATIC	1, 3, 2

✳ MATERIAL

TERMINAL 1 : COPPER ALLOY
TERMINAL 2 : COPPER ALLOY
TERMINAL 3 : COPPER ALLOY
HOUSING : PA66

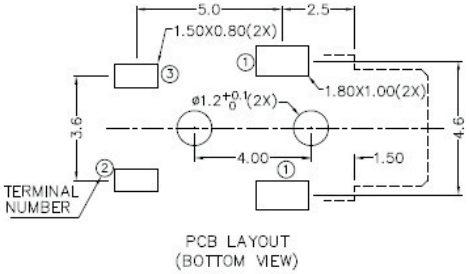

ORDER INFORMATION

Product No. : KLS1-TSJ-2.5-002A

Pos. NO.

Series NO.

2.5mm Mono Jack * Stereo Jack Series

KLS1-TSJ-2.5-003A (Dip Stereo Jack)

Housing Material / Center Pin Material	PA66 / Brass
Rated Load	DC 12V 1A Max
Contact resistance	⩽0.03Ω
Insulation resistance	⩾100MΩ
Withstand voltage	AC 500V(50Hz) 1min
Actuating Force	3~20N
Life	5000Time

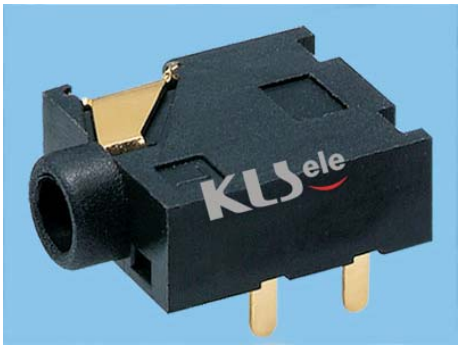

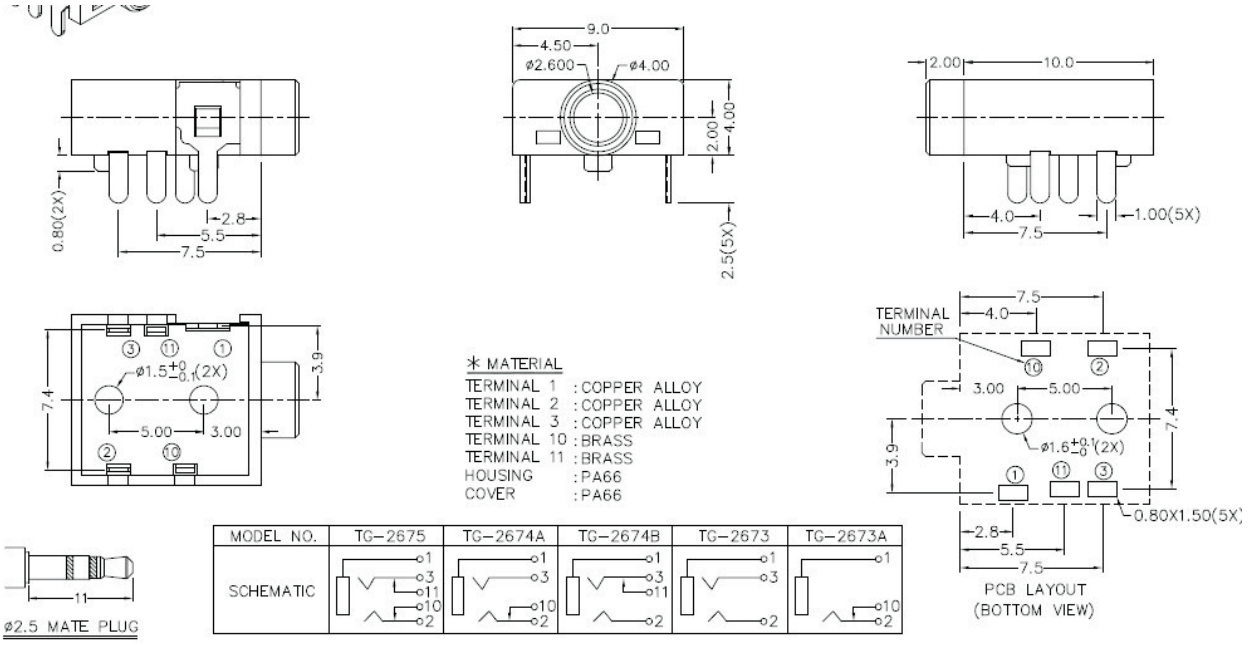

MODEL NO.	TG-2675	TG-2674A	TG-2674B	TG-2673	TG-2673A
SCHEMATIC					

ORDER INFORMATION

Product No. : KLS1-TSJ-2.5-003A

Pos. NO.

Series NO.

2.5mm Mono Jack * Stereo Jack Series

KLS1-TSJ-2.5-004A (Dip Stereo Jack)

Housing Material / Center Pin Material	PA66 / Brass
Rated Load	DC 12V 1A Max
Contact resistance	⩽0.03Ω
Insulation resistance	⩾100MΩ
Withstand voltage	AC 500V(50Hz) 1min
Actuating Force	3~20N
Life	5000Time

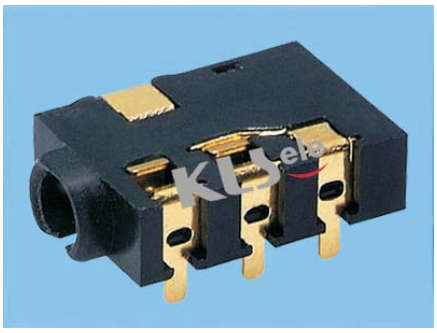

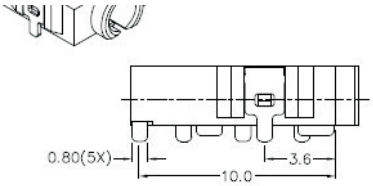

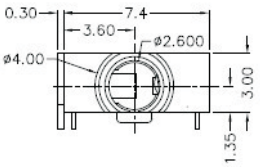

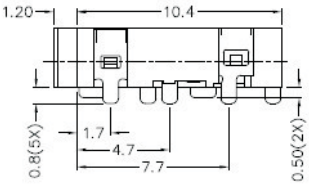

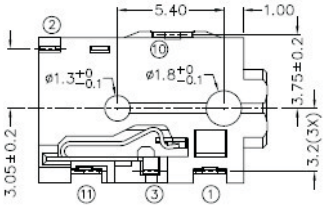

✳ MATERIAL

TERMINAL 1	:COPPER ALLOY
TERMINAL 2	:COPPER ALLOY
TERMINAL 3	:COPPER ALLOY
TERMINAL 10	:BRASS
TERMINAL 11	:COPPER ALLOY
HOUSING	:PA6T

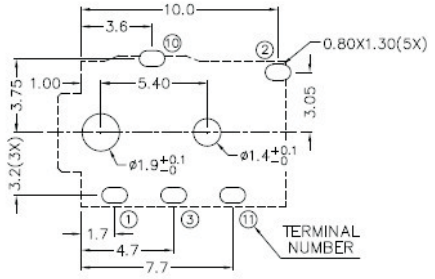

PCB LAYOUT
(TOP VIEW)

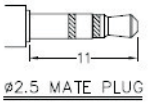

MODEL NO.	TG-2745	TG-2744A	TG-2744B	TG-2743	TG-2743A
SCHEMATIC	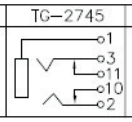	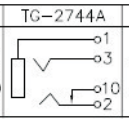	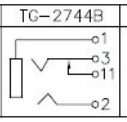	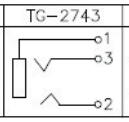	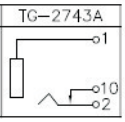

ORDER INFORMATION

Product No. : KLS1-TSJ-2.5-004A

Pos. NO.

Series NO.

2.5mm Mono Jack * Stereo Jack Series

KLS1-TSJ-2.5-005A (Dip Stereo Jack)

Housing Material / Center Pin Material	PBT / Brass
Rated Load	DC 12V 0.5A Max
Contact resistance	⩽0.03Ω
Insulation resistance	⩾100MΩ
Withstand voltage	AC 500V(50Hz) 1min
Actuating Force	2.2~20N
Life	5000Time



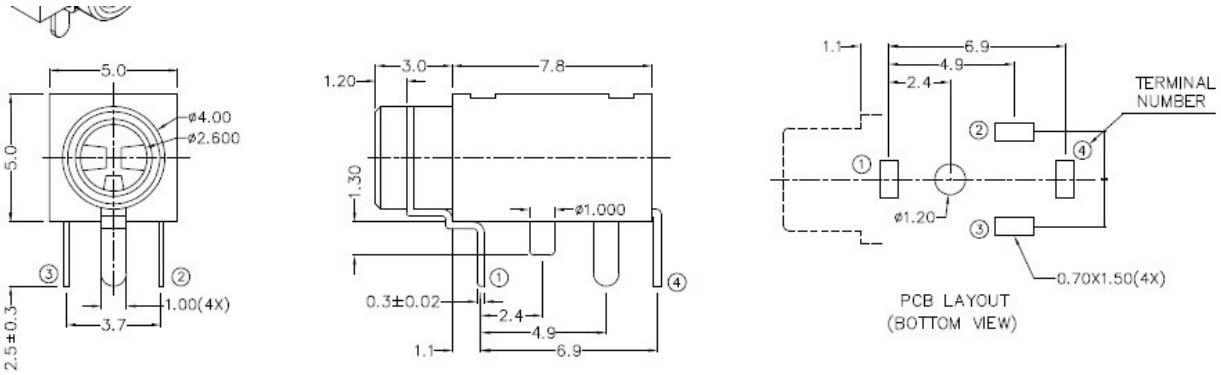

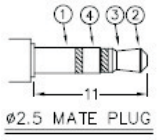

MODEL NO.	TG-255
SCHEMATIC	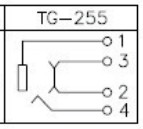

*MATERIAL

TERMINAL 1	:BRASS
TERMINAL 2	:COPPER ALLOY
TERMINAL 3	:COPPER ALLOY
TERMINAL 4	:COPPER ALLOY
BUSHING	:BRASS
HOUSING	:PBT

ORDER INFORMATION

Product No. : KLS1-TSJ-2.5-005A

Pos. NO.

Series NO.

2.5mm Mono Jack * Stereo Jack Series

KLS1-TSJ-2.5-006A (Dip Stereo Jack)

Housing Material / Center Pin Material	PA66 / Brass
Rated Load	DC 12V 1A Max
Contact resistance	⩽0.03Ω
Insulation resistance	⩾100MΩ
Withstand voltage	AC 500V(50Hz) 1min
Actuating Force	2.2~20N
Life	5000Time



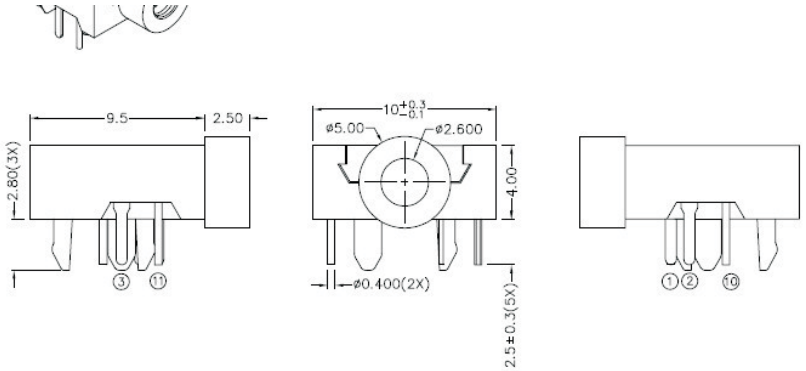

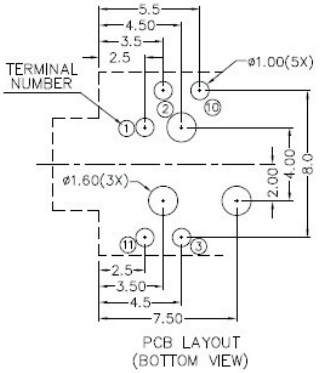

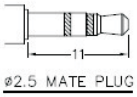

MODEL NO.	TG-2605	TG-2604A	TG-2604B	TG-2603	TG-2603A	TG-2602
SCHEMATIC	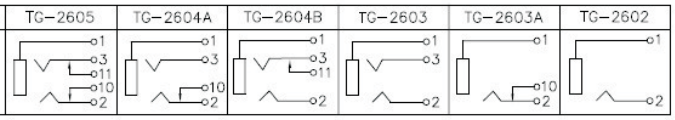					

✳ MATERIAL

TERMINAL 1	:BRASS
TERMINAL 2	:COPPER ALLOY
TERMINAL 3	:COPPER ALLOY
TERMINAL 10	:COPPER ALLOY
TERMINAL 11	:COPPER ALLOY
BUSHING	:BRASS
HOUSING	:PA66
COVER	:PA66

KLS1-PJ-2.5-006B:

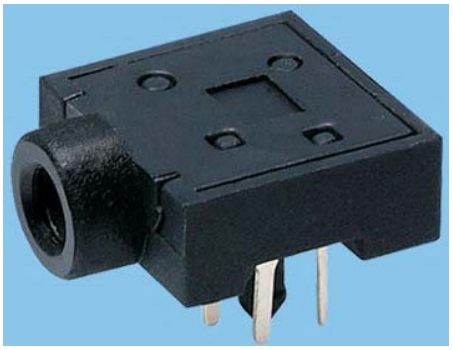

ORDER INFORMATION

Product No. : KLS1-TSJ-2.5-006A

Pos. NO.

Series NO.

2.5mm Mono Jack * Stereo Jack Series

KLS1-TSJ-2.5-007A (Dip Stereo Jack)

Housing Material / Center Pin Material	PA66 / Brass
Rated Load	DC 12V 1A Max
Contact resistance	⩽0.03Ω
Insulation resistance	⩾100MΩ
Withstand voltage	AC 500V(50Hz) 1min
Actuating Force	2.2~20N
Life	5000Time

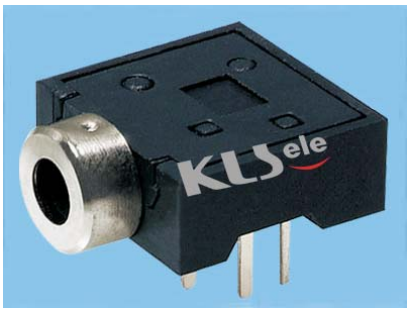

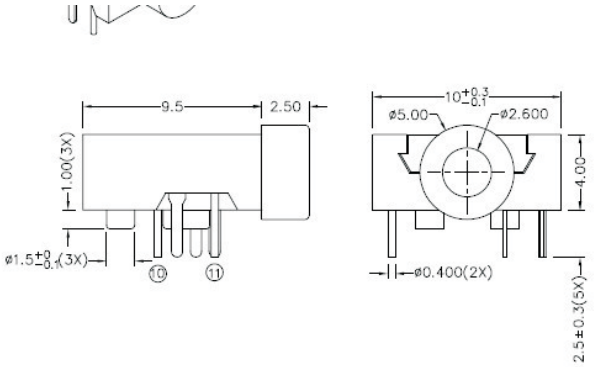

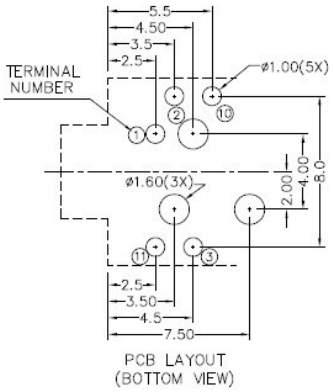

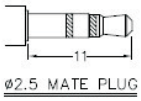

MODEL NO.	TG-2635P	TG-2634AP	TG-2634BP	TG-2633P	TG-2633AP	TG-2632P
SCHEMATIC	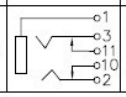	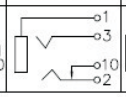	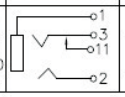	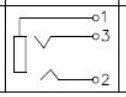	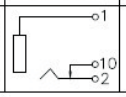	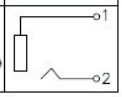

*MATERIAL

TERMINAL 1	:BRASS
TERMINAL 2	:COPPER ALLOY
TERMINAL 3	:COPPER ALLOY
TERMINAL 10	:COPPER ALLOY
TERMINAL 11	:COPPER ALLOY
BUSHING	:PA66
HOUSING	:PA66
COVER	:PA66

KLS1-PJ-2.5-007B:

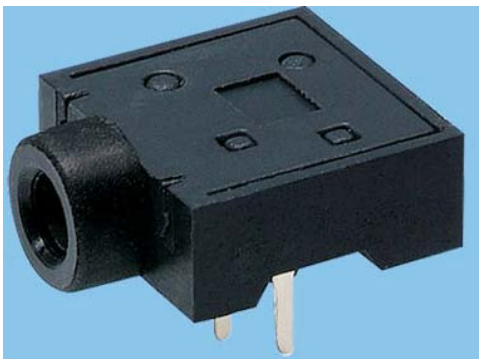

ORDER INFORMATION

Product No. : KLS1-TSJ-2.5-007A

Pos. NO.

Series NO.

2.5mm Mono Jack * Stereo Jack Series

KLS1-SPJ-2.5-001A (SMD Stereo Jack)

Housing Material / Center Pin Material	PA6T / BRASS
Rated Load	DC 12V 1A Max
Contact resistance	⩽0.03Ω
Insulation resistance	⩾100MΩ
Withstand voltage	AC 500V(50Hz) 1min
Actuating Force	3~20N
Life	5000Time



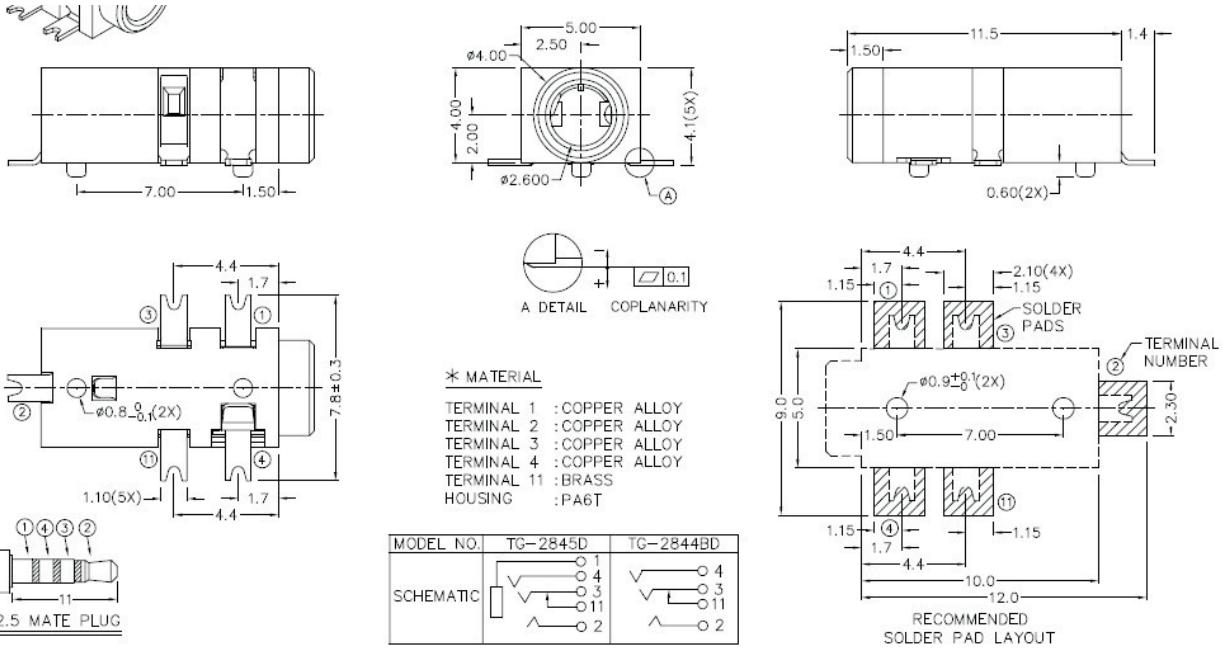

ORDER INFORMATION

Product No. : KLS1-SPJ-2.5-001A

Pos. NO.

Series NO.

I

2.5mm Mono Jack * Stereo Jack Series

KLS1-SPJ-2.5-002A (SMD Stereo Jack)

Housing Material / Center Pin Material	PA6T / BRASS
Rated Load	DC 12V 1A Max
Contact resistance	⩽0.03Ω
Insulation resistance	⩾100MΩ
Withstand voltage	AC 500V(50Hz) 1min
Actuating Force	3~20N
Life	5000Time

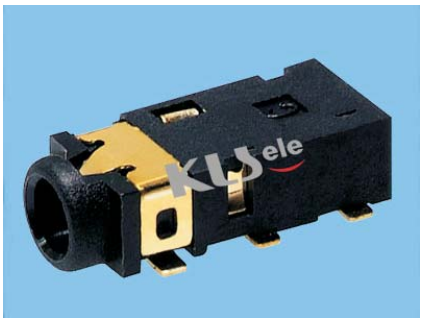

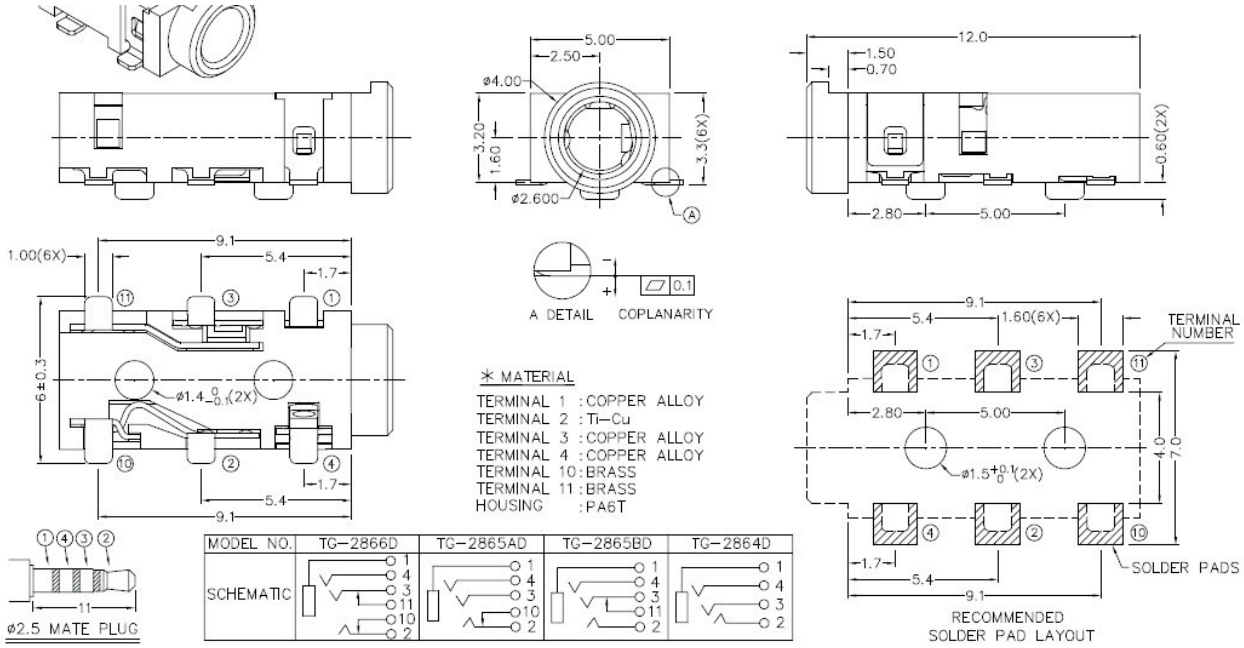

ORDER INFORMATION

ProductNo.. : KLS1-SPJ-2.5-002A

Pos. NO.

Series NO.

2.5mm Mono Jack * Stereo Jack Series

KLS1-SPJ-2.5-03A (SMD Stereo Jack)

Housing Material / Center Pin Material	PA6T / BRASS
Rated Load	DC 12V 1A Max
Contact resistance	⩽0.03Ω
Insulation resistance	⩾100MΩ
Withstand voltage	AC 500V(50Hz) 1min
Actuating Force	3~20N
Life	5000Time



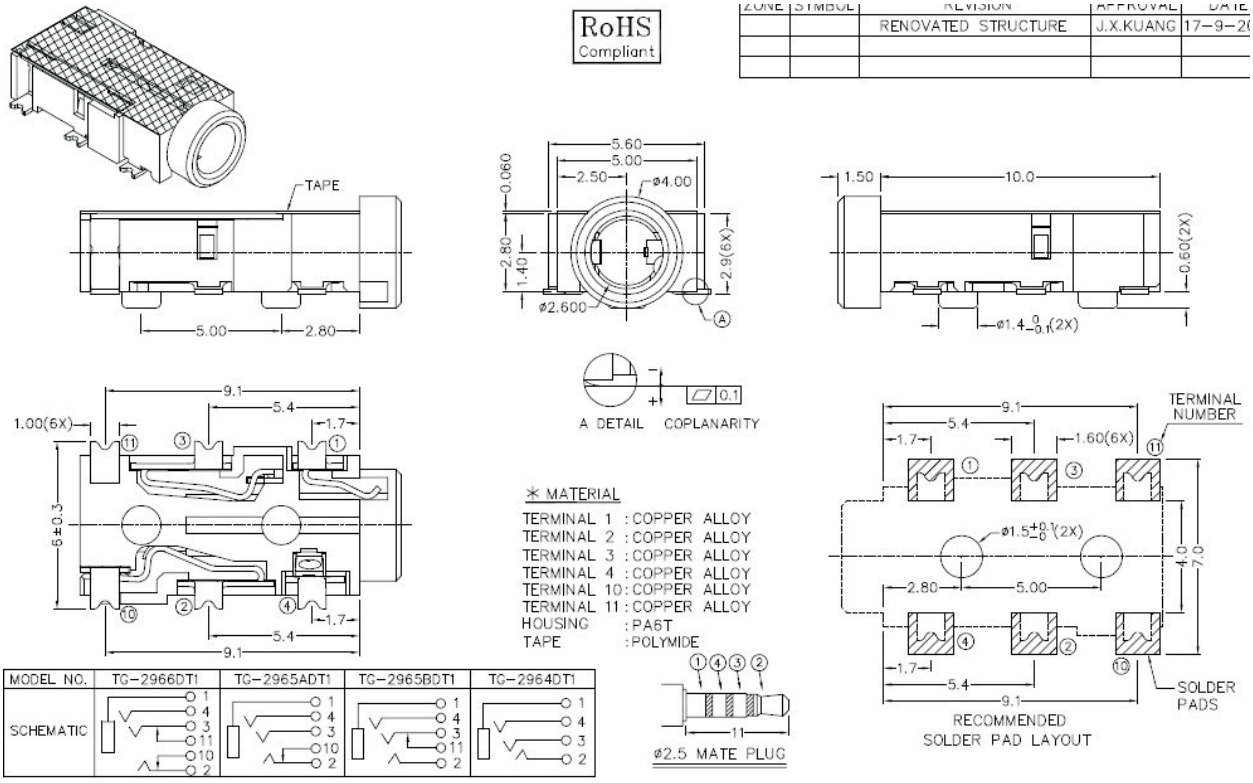

ORDER INFORMATION

Product No. : KLS1-SPJ-2.5-003A

Pos. NO.

Series NO.

2.5mm Mono Jack * Stereo Jack Series

KLS1-SPJ-2.5-004A (SMD Stereo Jack)

Housing Material / Center Pin Material	PA6T / BRASS
Rated Load	DC 12V 1A Max
Contact resistance	⩽0.03Ω
Insulation resistance	⩾100MΩ
Withstand voltage	AC 500V(50Hz) 1min
Actuating Force	3~20N
Life	5000Time



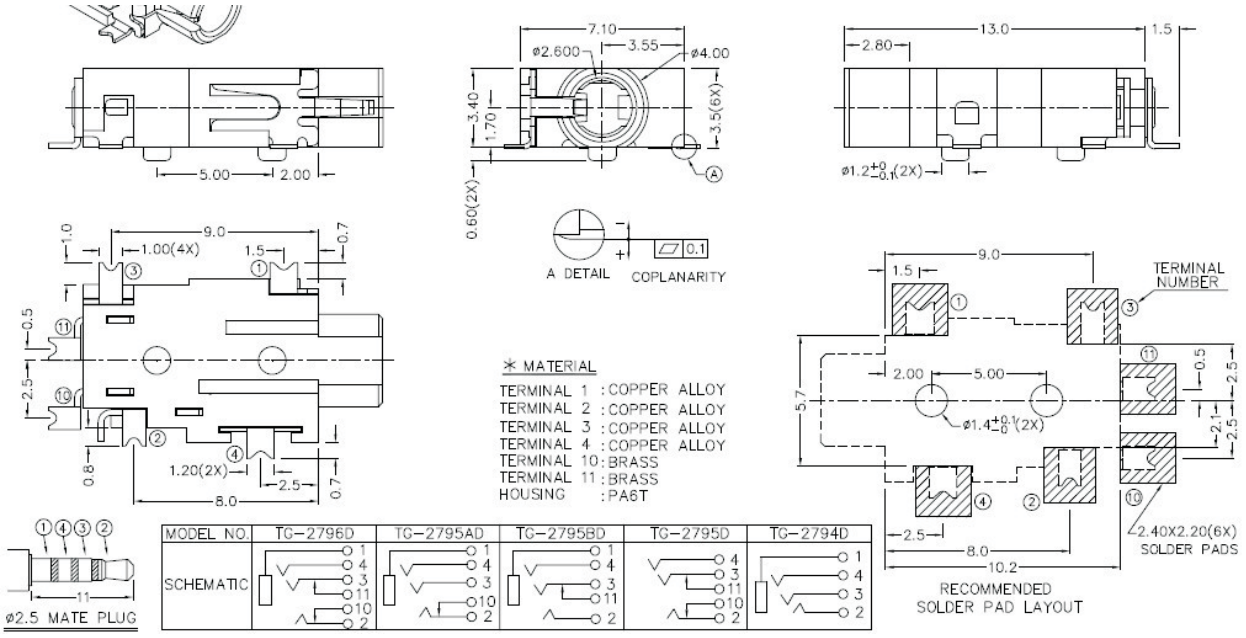

ORDER INFORMATION

Product No. : KLS1-SPJ-2.5-004A

Pos. NO.

Series NO.

2.5mm Mono Jack * Stereo Jack Series

KLS1-SPJ-2.5-005A (SMD Stereo Jack)

Housing Material / Center Pin Material	PA6T / BRASS
Rated Load	DC 12V 1A Max
Contact resistance	⩽0.03Ω
Insulation resistance	⩾100MΩ
Withstand voltage	AC 500V(50Hz) 1min
Actuating Force	3~20N
Life	5000Time



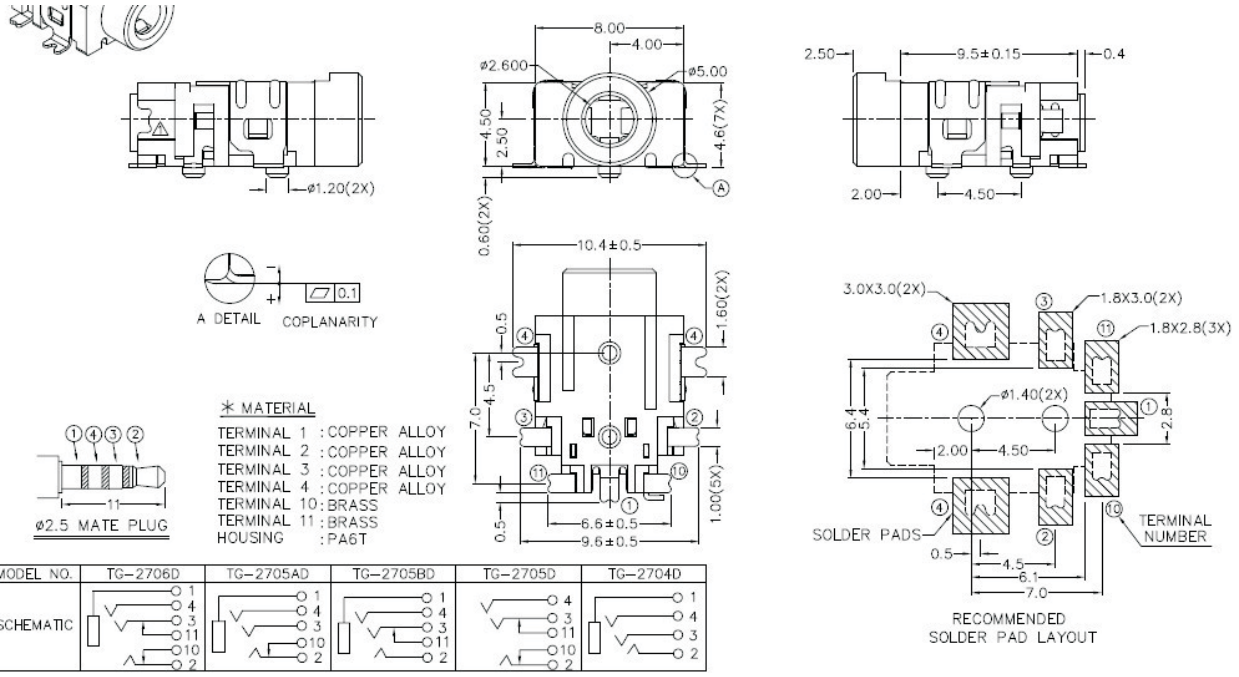

MODEL NO.	TG-2706D	TG-2705AD	TG-2705BD	TG-2705D	TG-2704D
SCHEMATIC					

ORDER INFORMATION

Product No. : KLS1-SPJ-2.5-005A

Pos. NO.

Series NO.

2.5mm Mono Jack * Stereo Jack Series

KLS1-SPJ-2.5-006A (SMD Stereo Jack)

Housing Material / Center Pin Material	PA6T / BRASS
Rated Load	DC 12V 1A Max
Contact resistance	⩽0.03Ω
Insulation resistance	⩾100MΩ
Withstand voltage	AC 500V(50Hz) 1min
Actuating Force	3~20N
Life	5000Time

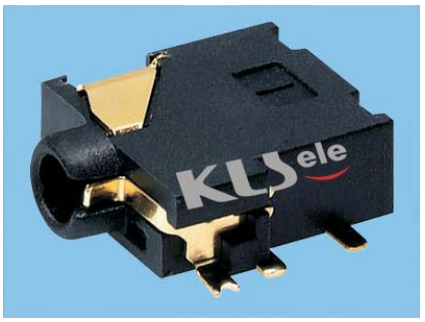

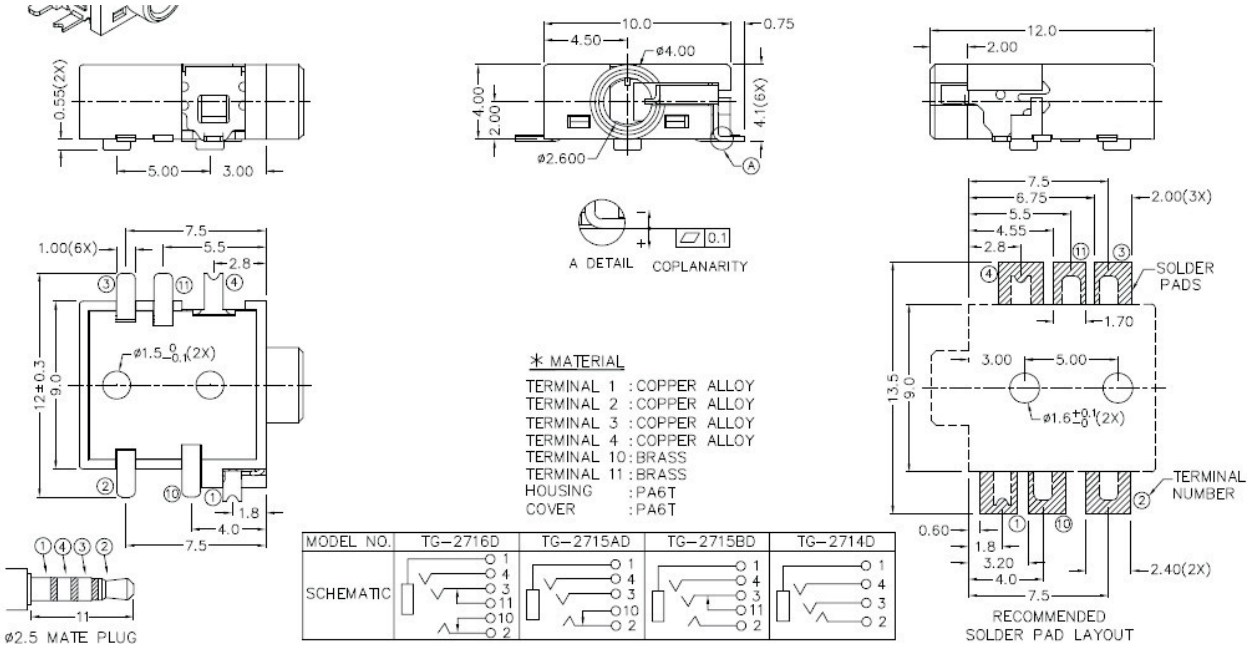

ORDER INFORMATION

Product No. : KLS1-SPJ-2.5-006A

Pos. NO.

Series NO.

I

2.5mm Mono Jack * Stereo Jack Series

KLS1-SPJ-2.5-007A (SMD Stereo Jack)

Housing Material / Center Pin Material	PA6T / BRASS
Rated Load	DC 12V 1A Max
Contact resistance	⩽0.03Ω
Insulation resistance	⩾100MΩ
Withstand voltage	AC 500V(50Hz) 1min
Actuating Force	3~20N
Life	5000Time



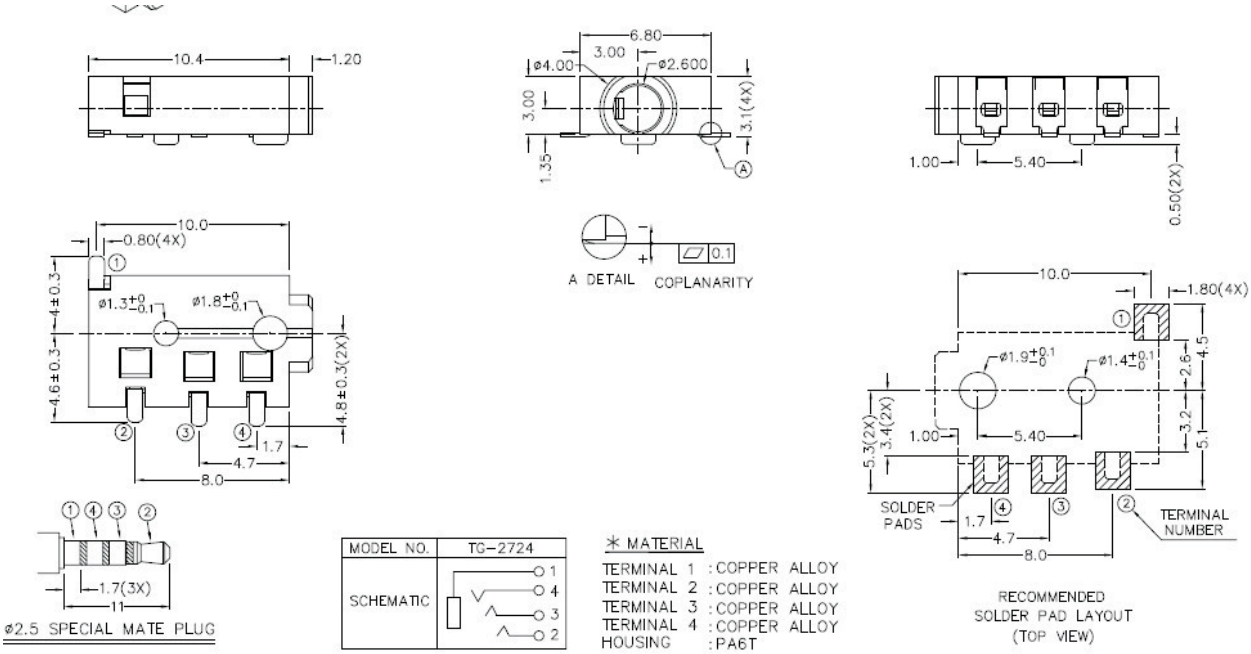

ORDER INFORMATION

Product No. : KLS1-SPJ-2.5-007A

Pos. NO.

Series NO.

2.5mm Mono Jack * Stereo Jack Series

KLS1-SPJ-2.5-008A (SMD Stereo Jack)

Housing Material / Center Pin Material	PA6T / BRASS
Rated Load	DC 12V 1A Max
Contact resistance	⩽0.03Ω
Insulation resistance	⩾100MΩ
Withstand voltage	AC 500V(50Hz) 1min
Actuating Force	3~20N
Life	5000Time



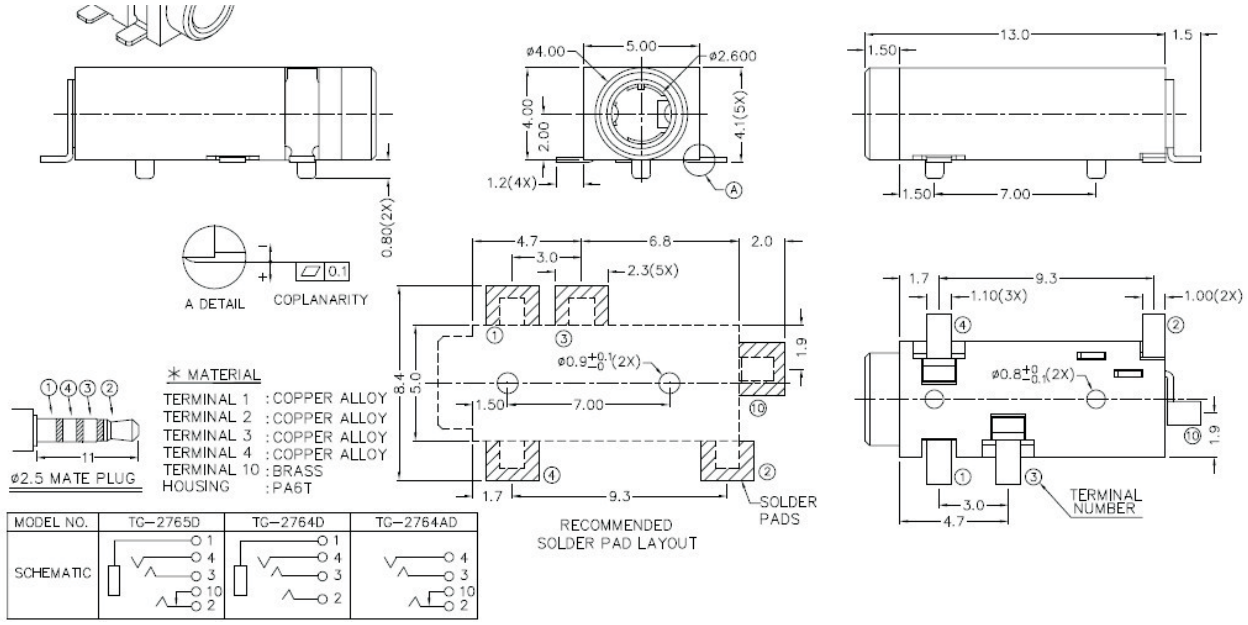

MODEL NO.	TG-2765D	TG-2764D	TG-2764AD
SCHEMATIC			

ORDER INFORMATION

Product No. : KLS1-SPJ-2.5-008A

Pos. NO.

Series NO.

2.5mm Mono Jack * Stereo Jack Series

KLS1-SPJ-2.5-009A (SMD Stereo Jack)

Housing Material / Center Pin Material	PA6T / BRASS
Rated Load	DC 12V 1A Max
Contact resistance	⩽0.03Ω
Insulation resistance	⩾100MΩ
Withstand voltage	AC 500V(50Hz) 1min
Actuating Force	3~20N
Life	5000Time



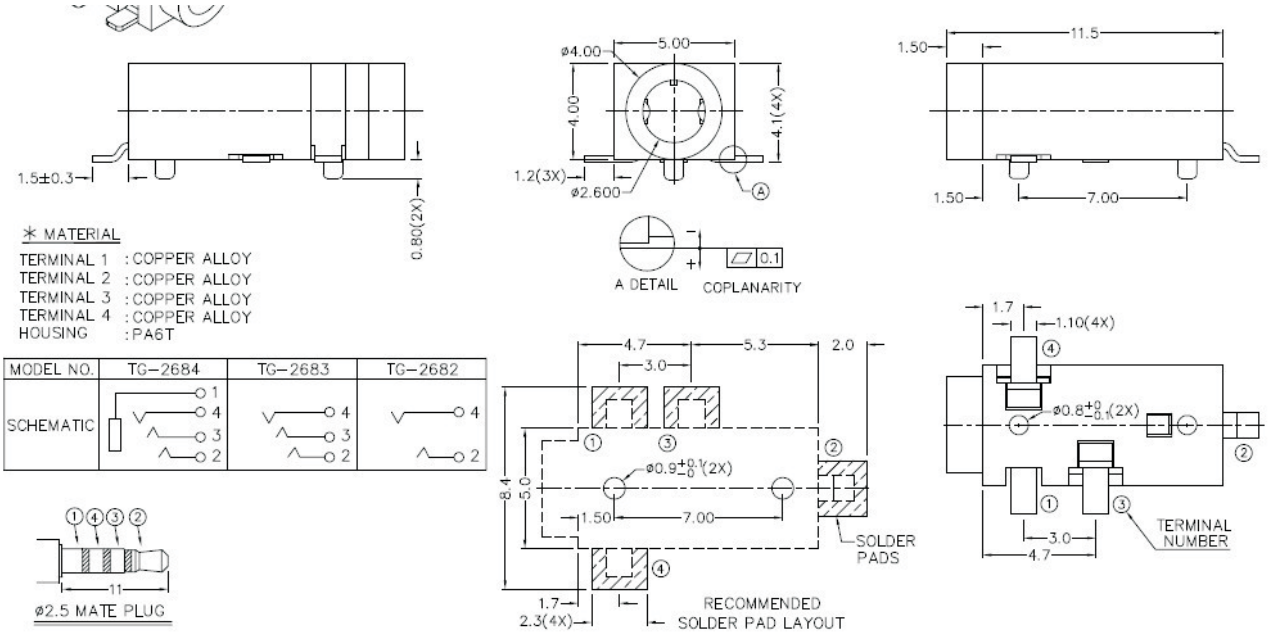

ORDER INFORMATION

Product No. : KLS1-SPJ-2.5-009A

Pos. NO.

Series NO.

2.5mm Mono Jack * Stereo Jack Series

KLS1-SSJ-2.5-001A (Dip Stereo Jack)

Housing Material / Center Pin Material	PA66 / Brass
Rated Load	DC 12V 1A Max
Contact resistance	⩽0.03Ω
Insulation resistance	⩾100MΩ
Withstand voltage	AC 500V(50Hz) 1min
Actuating Force	2.2~20N
Life	5000Time



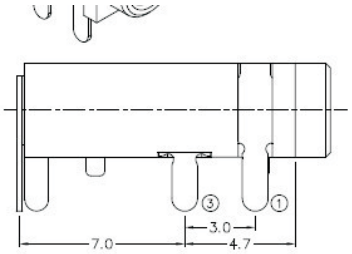

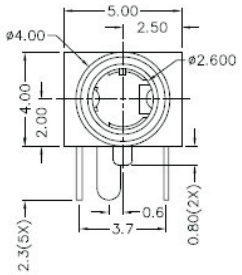

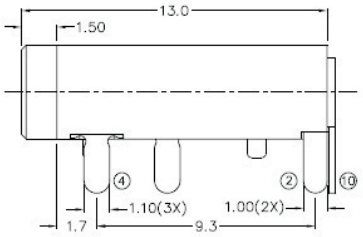

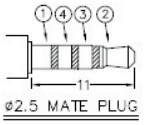

✳ MATERIAL
TERMINAL 1 :COPPER ALLOY
TERMINAL 2 :COPPER ALLOY
TERMINAL 3 :COPPER ALLOY
TERMINAL 4 :COPPER ALLOY
TERMINAL 10:BRASS
HOUSING :PA66

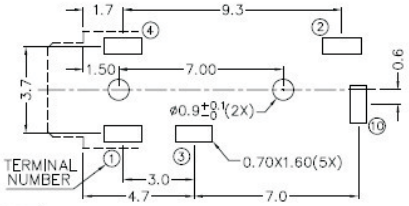

PCB LAYOUT
(BOTTOM VIEW)

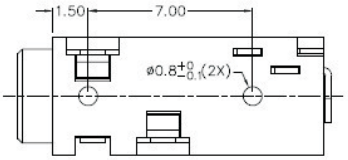

MODEL NO.	TG-2765	TG-2764	TG-2764A
SCHEMATIC	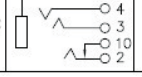	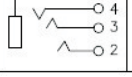	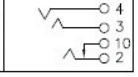

ORDER INFORMATION

Product No. : KLS1-SSJ-2.5-001A

Pos. NO.

Series NO.

2.5mm Mono Jack * Stereo Jack Series

KLS1-SSJ-2.5-002A (Dip Stereo Jack)

Housing Material / Center Pin Material	PA66 / Brass
Rated Load	DC 12V 1A Max
Contact resistance	⩽0.03Ω
Insulation resistance	⩾100MΩ
Withstand voltage	AC 500V(50Hz) 1min
Actuating Force	2.2~20N
Life	5000Time

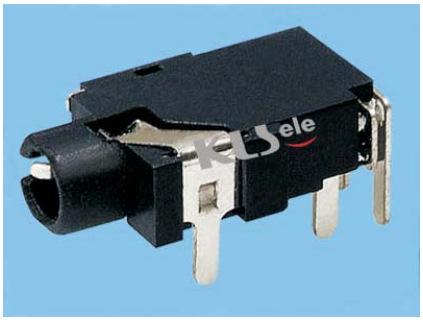

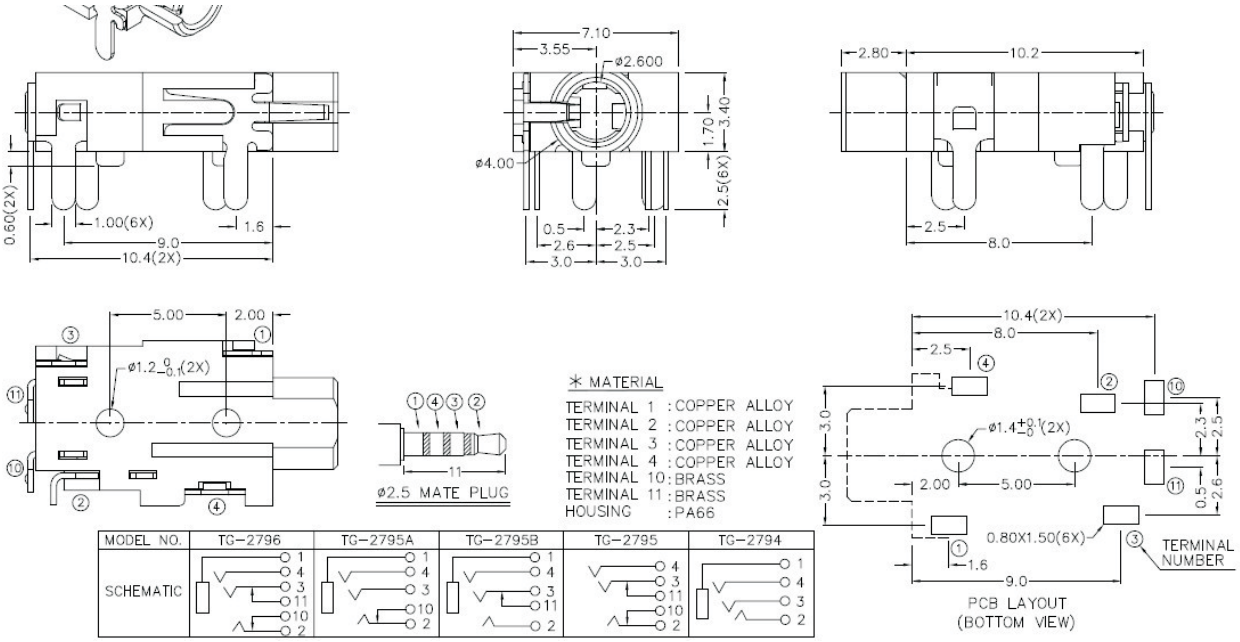

MODEL NO.	TG-2796	TG-2795A	TG-2795B	TG-2795	TG-2794
SCHEMATIC					

ORDER INFORMATION

Product No. : KLS1-SSJ-2.5-002A

Pos. NO.

Series NO.

2.5mm Mono Jack * Stereo Jack Series

KLS1-SSJ-2.5-003A (Dip Stereo Jack)

Housing Material / Center Pin Material	PA66 / Brass
Rated Load	DC 12V 1A Max
Contact resistance	⩽0.03Ω
Insulation resistance	⩾100MΩ
Withstand voltage	AC 500V(50Hz) 1min
Actuating Force	2.2~20N
Life	5000Time

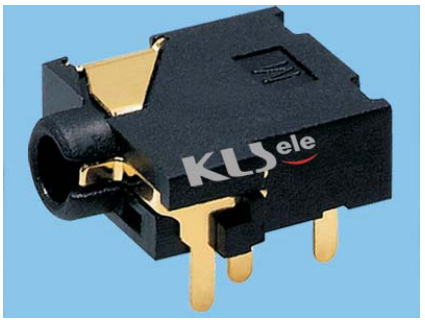

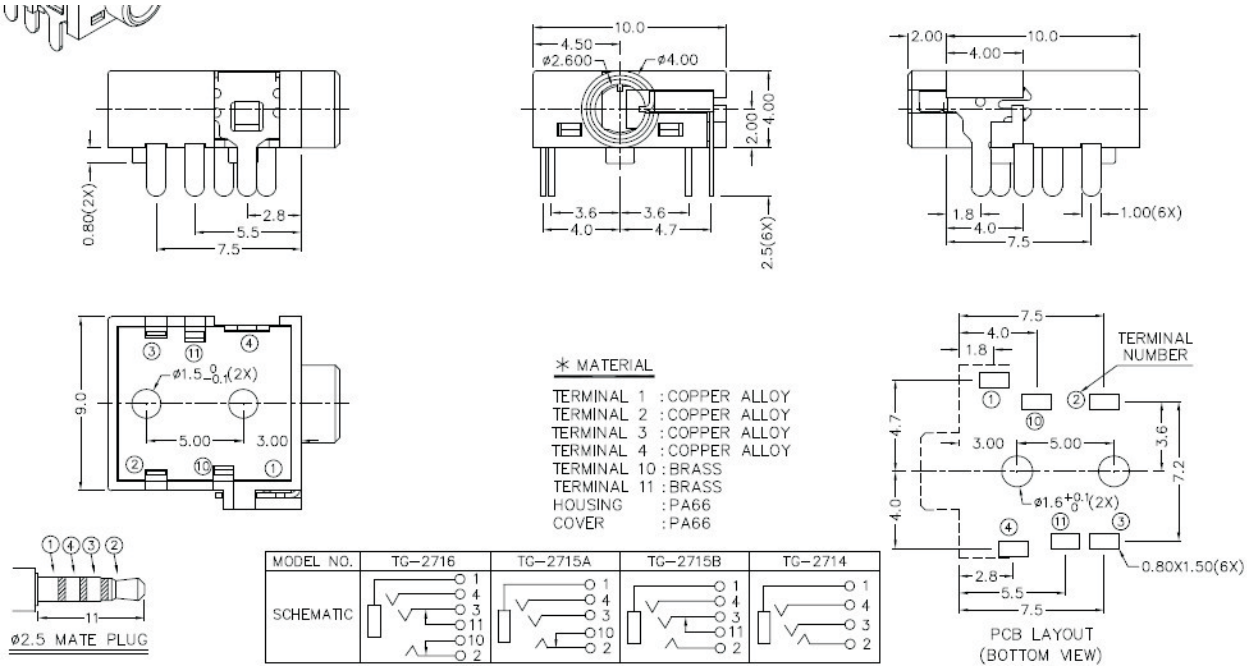

ORDER INFORMATION

Product No. : KLS1-SSJ-2.5-003A

Pos. NO.

Series NO.

2.5mm Mono Jack * Stereo Jack Series

KLS1-SSJ-2.5-004A (Dip Stereo Jack)

Housing Material / Center Pin Material	PA66 / Brass
Rated Load	DC 12V 1A Max
Contact resistance	⩽0.03Ω
Insulation resistance	⩾100MΩ
Withstand voltage	AC 500V(50Hz) 1min
Actuating Force	2.2~20N
Life	5000Time



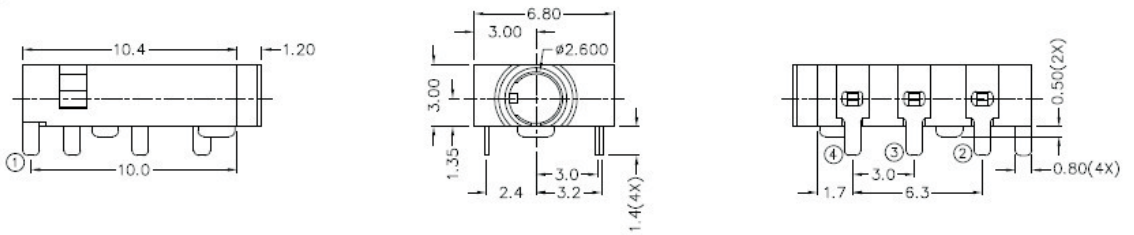

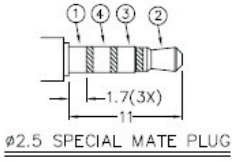

ø2.5 SPECIAL MATE PLUG

MODEL NO.	TG-2754
SCHEMATIC	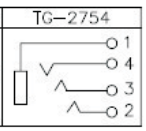

PCB LAYOUT
(BOTTOM VIEW)

✳ MATERIAL

TERMINAL 1 : COPPER ALLOY
TERMINAL 2 : COPPER ALLOY
TERMINAL 3 : COPPER ALLOY
TERMINAL 4 : COPPER ALLOY
HOUSING : PA66

ORDER INFORMATION

Product No. : KLS1-SSJ-2.5-004A

Pos. NO.

Series NO.

2.5mm Mono Jack * Stereo Jack Series

KLS1-TPJ-2.1-001A (SMD Stereo Jack)

Housing Material / Center Pin Material	PA66 / Brass
Rated Load	DC 12V 1A Max
Contact resistance	⩽0.03Ω
Insulation resistance	⩾100MΩ
Withstand voltage	AC 500V(50Hz) 1min
Actuating Force	2.2~20N
Life	5000Time

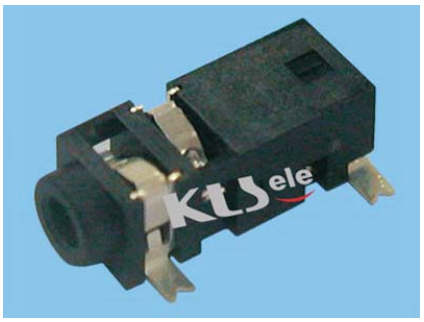

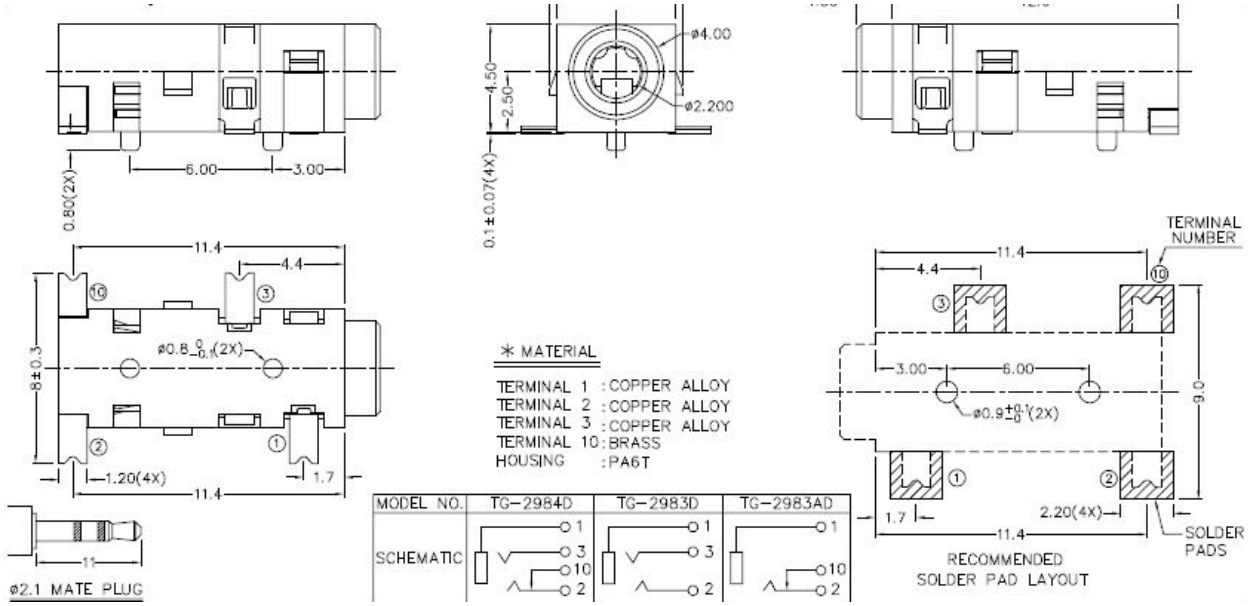

ORDER INFORMATION

Product No. : KLS1-TPJ-2.1-001A

Pos. NO.

Series NO.

2.5mm Mono Jack * Stereo Jack Series

KLS1-TPJ-2.5-001A (SMD Stereo Jack)

Housing Material / Center Pin Material	PA66 / Brass
Rated Load	DC 12V 1A Max
Contact resistance	⩽0.03Ω
Insulation resistance	⩾100MΩ
Withstand voltage	AC 500V(50Hz) 1min
Actuating Force	2.2~20N
Life	5000Time



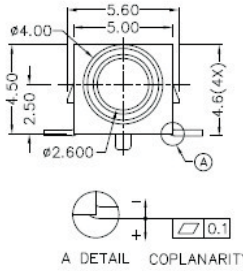

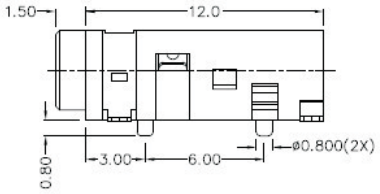

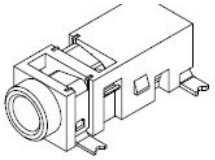

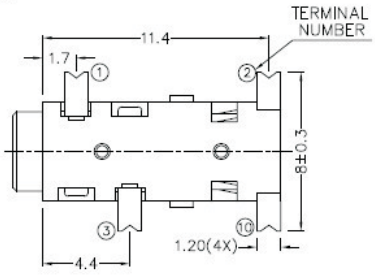

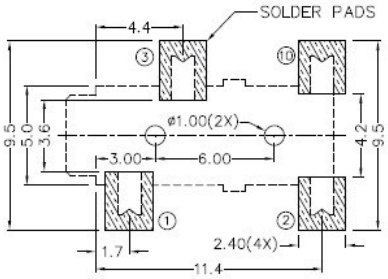

RECOMMENDED
SOLDER PAD LAYOUT

✳ MATERIAL

TERMINAL 1 : COPPER ALLOY
TERMINAL 2 : COPPER ALLOY
TERMINAL 3 : COPPER ALLOY
TERMINAL 10 : BRASS
HOUSING : PA6T

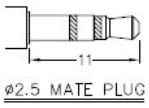

MODEL NO.	TG-2573A	TG-2573	TG-2574
SCHEMATIC	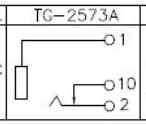	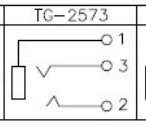	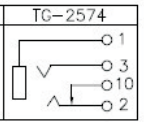

ORDER INFORMATION

Product No. : KLS1-TPJ-2.5-001A

Pos. NO.

Series NO.

2.5mm Mono Jack * Stereo Jack Series

KLS1-TPJ-2.5-002A (SMD Stereo Jack)

Housing Material / Center Pin Material	PA6T / PHOSPHOR BRONZE
Rated Load	DC 12V 1A Max
Contact resistance	⩽0.03Ω
Insulation resistance	⩾100MΩ
Withstand voltage	AC 500V(50Hz) 1min
Actuating Force	3~20N
Life	5000Time



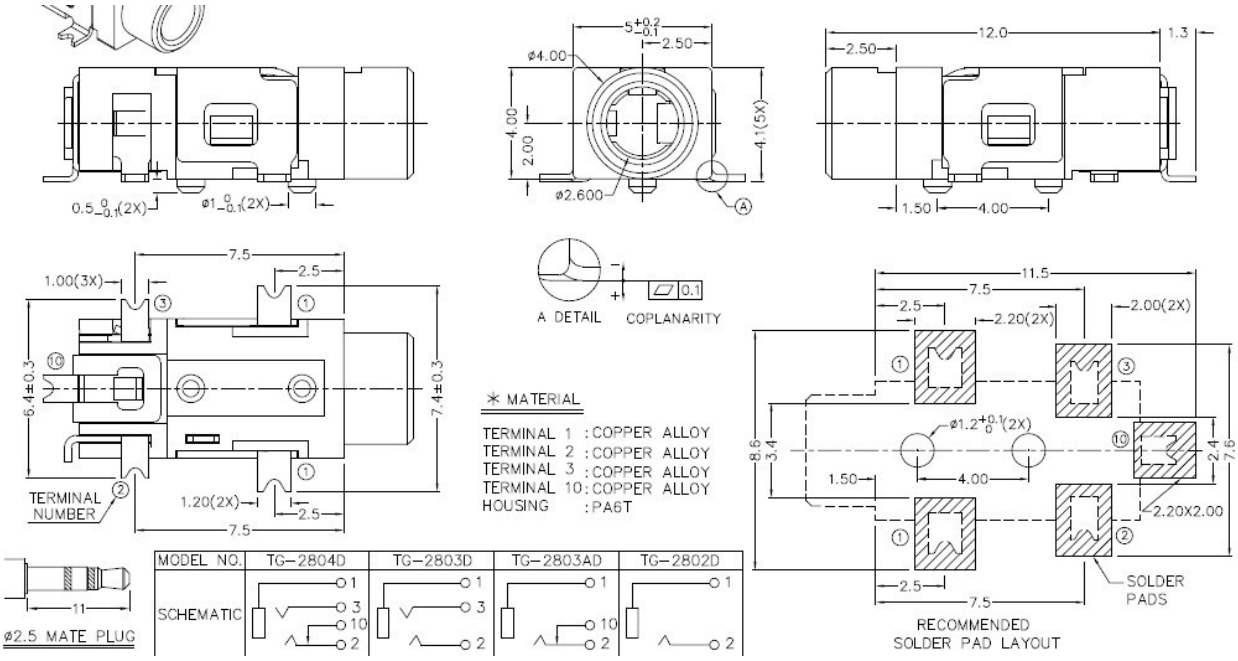

ORDER INFORMATION

Product No. : KLS1-TPJ-2.5-002A

Pos. NO.

Series NO.

2.5mm Mono Jack * Stereo Jack Series

KLS1-TPJ-2.5-003A (SMD Stereo Jack)

Housing Material / Center Pin Material	PA6T / PHOSPHOR BRONZE
Rated Load	DC 12V 1A Max
Contact resistance	⩽0.03Ω
Insulation resistance	⩾100MΩ
Withstand voltage	AC 500V(50Hz) 1min
Actuating Force	3~20N
Life	5000Time



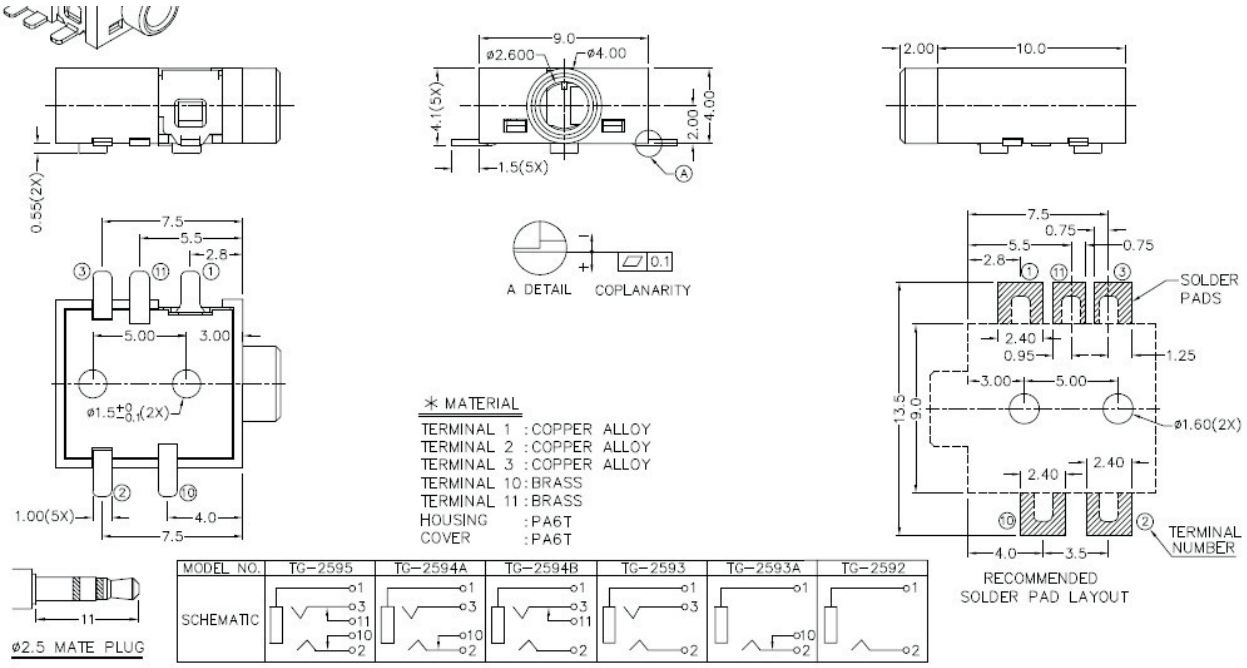

ORDER INFORMATION

Product No. : KLS1-TPJ-2.5-003A

Pos. NO.

Series NO.

2.5mm Mono Jack * Stereo Jack Series

KLS1-TPJ-2.5-004A (SMD Stereo Jack)

Housing Material / Center Pin Material	PA6T / BRASS
Rated Load	DC 12V 1A Max
Contact resistance	⩽0.03Ω
Insulation resistance	⩾100MΩ
Withstand voltage	AC 500V(50Hz) 1min
Actuating Force	3~20N
Life	5000Time



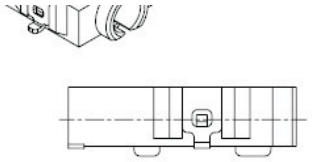

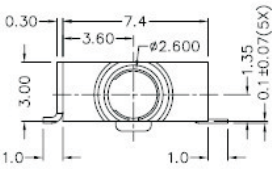

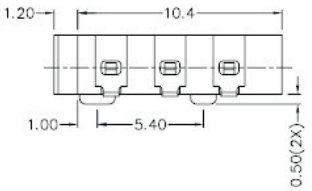

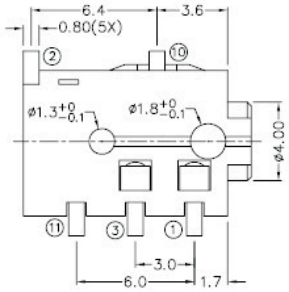

* MATERIAL
TERMINAL 1 : COPPER ALLOY
TERMINAL 2 : COPPER ALLOY
TERMINAL 3 : COPPER ALLOY
TERMINAL 10 : BRASS
TERMINAL 11 : COPPER ALLOY
HOUSING : PA6T

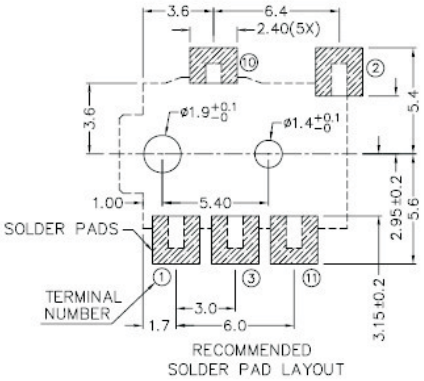

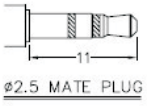

MODEL NO.	TG-2665	TG-2664A	TG-2663	TG-2663A
SCHEMATIC	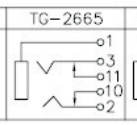	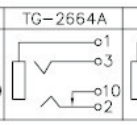	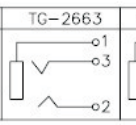	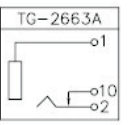

ORDER INFORMATION

Product No. : KLS1-TPJ-2.5-004A

Pos. NO.

Series NO.

2.5mm Mono Jack * Stereo Jack Series

KLS1-TPJ-2.5-005A (SMD Stereo Jack)

Housing Material / Center Pin Material	PA6T / BRASS
Rated Load	DC 12V 1A Max
Contact resistance	⩽0.03Ω
Insulation resistance	⩾100MΩ
Withstand voltage	AC 500V(50Hz) 1min
Actuating Force	3~20N
Life	5000Time

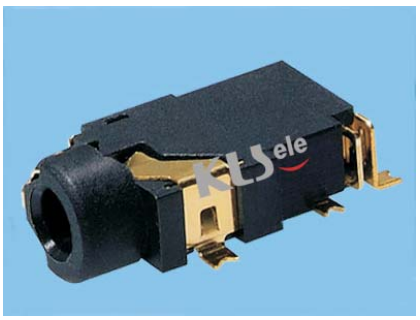

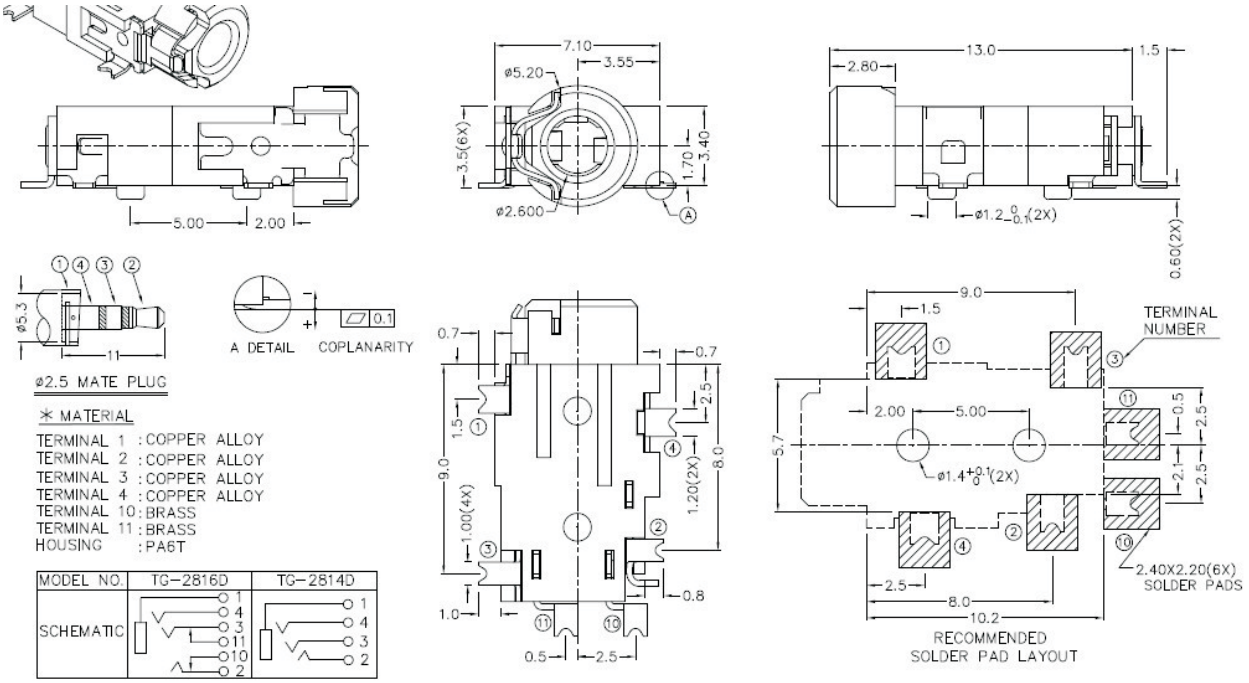

ORDER INFORMATION

Product No. : KLS1-TPJ-2.5-005A

Pos. NO.

Series NO.

2.5mm Mono Jack * Stereo Jack Series

KLS1-TPJ-2.5-006A (SMD Stereo Jack)

Housing Material / Center Pin Material	PA6T / BRASS
Rated Load	DC 12V 1A Max
Contact resistance	⩽0.03Ω
Insulation resistance	⩾100MΩ
Withstand voltage	AC 500V(50Hz) 1min
Actuating Force	3~20N
Life	5000Time



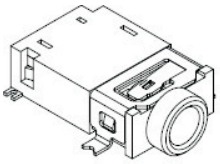

RoHS Compliant

ZONE	SYMBOL	REVISION	APPROVAL	DATE
		ADDED INDICATION OF COPLANARITY	J.X.KUANG	23-12-2

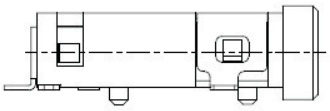

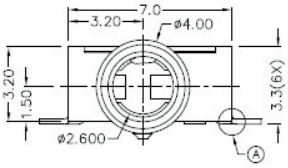

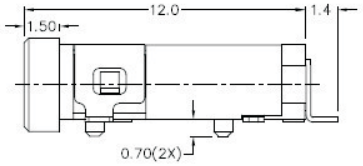

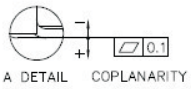

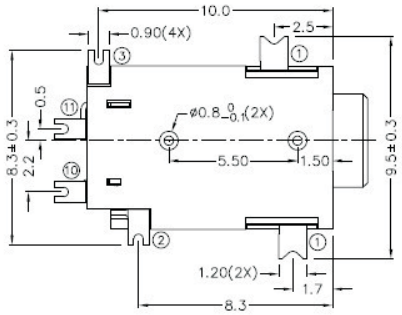

✳ MATERIAL

TERMINAL 1 : COPPER ALLOY
TERMINAL 2 : COPPER ALLOY
TERMINAL 3 : COPPER ALLOY
TERMINAL 10 : BRASS
TERMINAL 11 : BRASS
HOUSING : PA6T

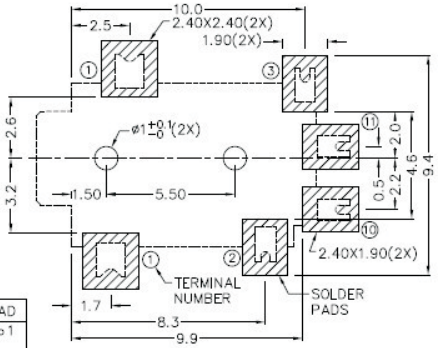

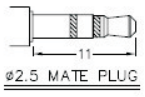

MODEL NO.	TG-2835D	TG-2834AD	TG-2834BD	TG-2833D	TG-2833AD
SCHEMATIC	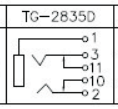	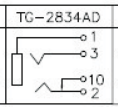	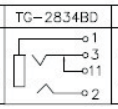	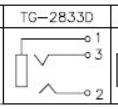	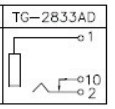

ORDER INFORMATION

Product No. : KLS1-TPJ-2.5-006A

Pos. NO.

Series NO.

2.5mm Mono Jack * Stereo Jack Series

KLS1-TPJ-2.5-007A (SMD Stereo Jack)

Housing Material / Center Pin Material	PA6T / BRASS
Rated Load	DC 12V 1A Max
Contact resistance	⩽0.03Ω
Insulation resistance	⩾100MΩ
Withstand voltage	AC 500V(50Hz) 1min
Actuating Force	3~20N
Life	5000Time

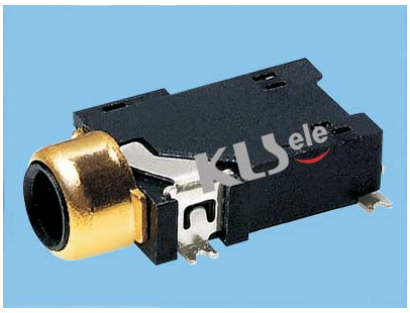

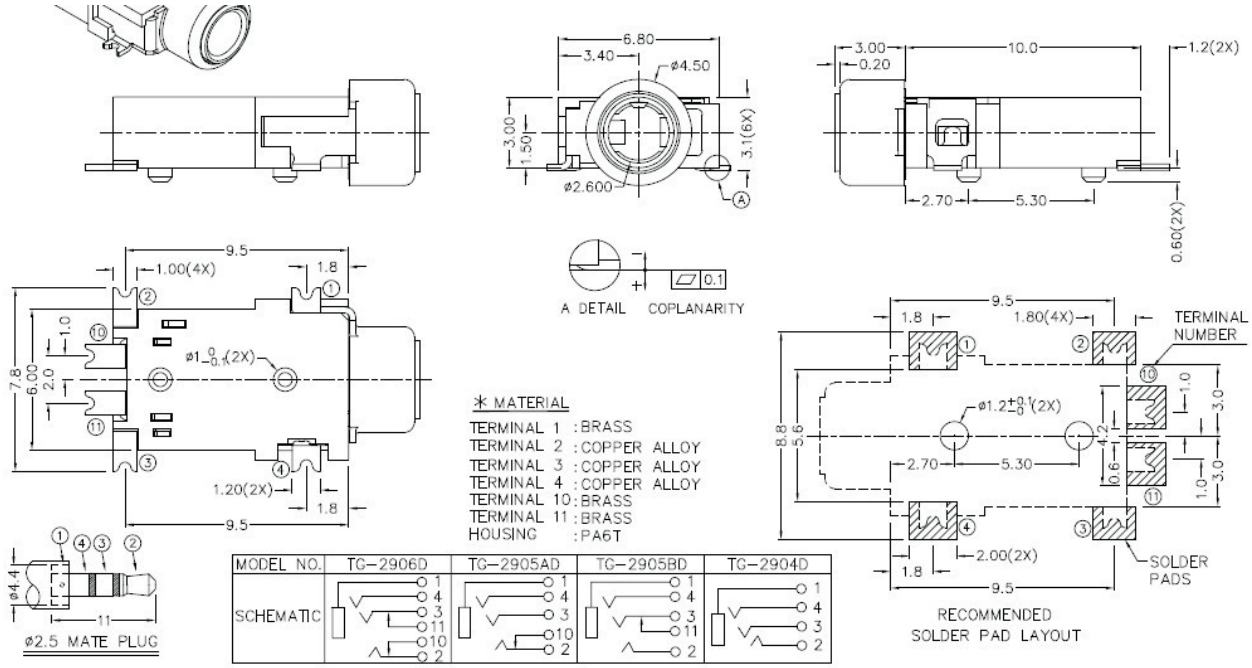

ORDER INFORMATION

Product No. : KLS1-TPJ-2.5-007A

Pos. NO.

Series NO.

2.5mm Mono Jack * Stereo Jack Series

KLS1-TPJ-2.5-008A (SMD Stereo Jack)

Housing Material / Center Pin Material	PA6T / BRASS
Rated Load	DC 12V 1A Max
Contact resistance	⩽0.03Ω
Insulation resistance	⩾100MΩ
Withstand voltage	AC 500V(50Hz) 1min
Actuating Force	3~20N
Life	5000Time

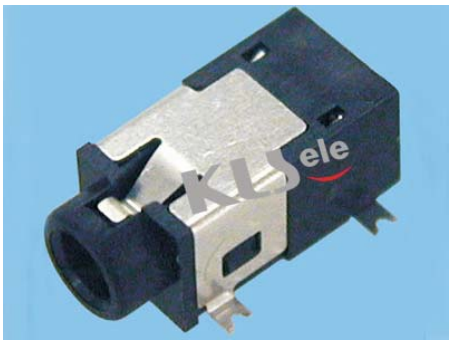

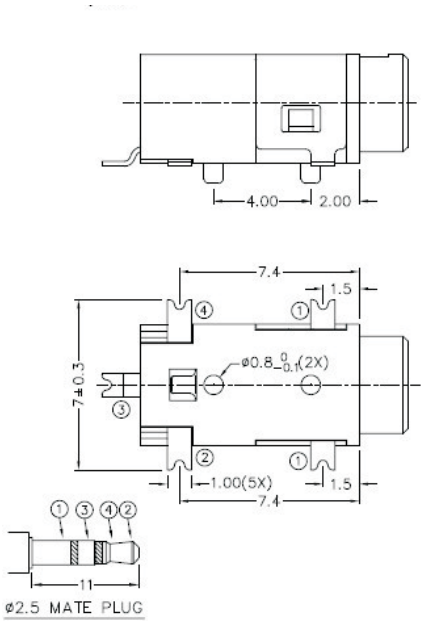

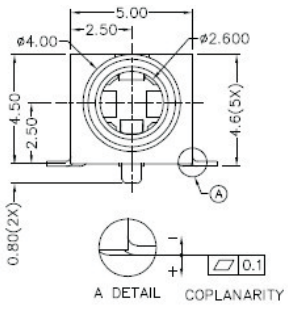

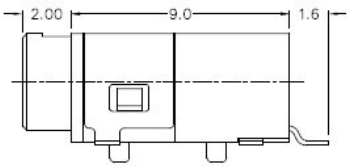

✳ MATERIAL

TERMINAL 1 : COPPER ALLOY
TERMINAL 2 : COPPER ALLOY
TERMINAL 3 : COPPER ALLOY
TERMINAL 4 : COPPER ALLOY
HOUSING : PA6T

MODEL NO.	TG-4014D
SCHEMATIC	

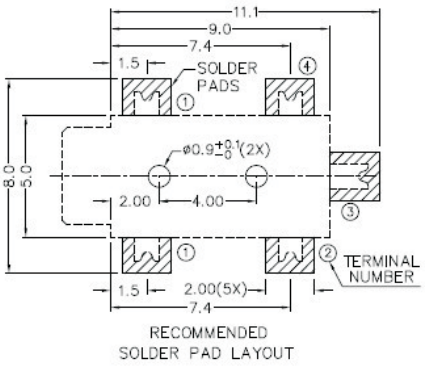

ORDER INFORMATION

Product No. : KLS1-TPJ-2.5-008A

Pos. NO.

Series NO.

3.5mm Mono Jack * Stereo Jack Series

KLS1-TG-3.5-001A (Dip Mono Jack)

Housing Material / Center Pin Material	PBT / Brass
Rated Load	DC 12V 0.5A Max
Contact resistance	⩽0.03Ω
Insulation resistance	⩾100MΩ
Withstand voltage	AC 500V(50Hz) 1min
Actuating Force	2.2~20N
Life	5000Time



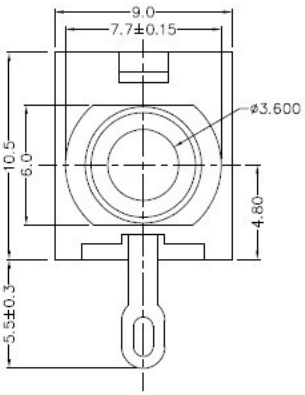

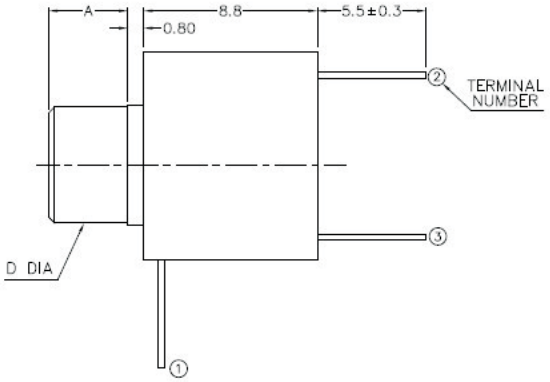

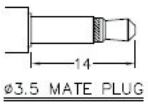

MODEL NO.	TG-35F	TG-35N	TG-35F3	TG-35N4	TG-35F5	TG-35N6
D DIA	FLASHED	THREADED	FLASHED	THREADED	FLASHED	THREADED
	ø6.0	M6X0.5	ø6.0	M6X0.5	ø5.5	M6X0.5
A	3.0mm	4.0mm	4.0mm	4.5mm	4.5mm	3.0mm
SCHEMATIC	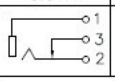	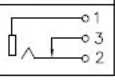	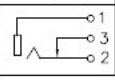	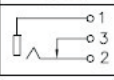	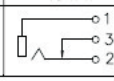	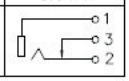

✳ MATERIAL

TERMINAL 1 : BRASS
TERMINAL 2 : COPPER ALLOY
TERMINAL 3 : BRASS
BUSHING : BRASS
HOUSING : PBT

ORDER INFORMATION

Product No. : KLS1-TG-3.5-001A

Pos. NO.

Series NO.

3.5mm Mono Jack * Stereo Jack Series

KLS1-TG-3.5-002A (Dip Mono Jack)

Housing Material / Center Pin Material	PBT / Brass
Rated Load	DC 12V 0.5A Max
Contact resistance	⩽0.03Ω
Insulation resistance	⩾100MΩ
Withstand voltage	AC 500V(50Hz) 1min
Actuating Force	2.2~20N
Life	5000Time

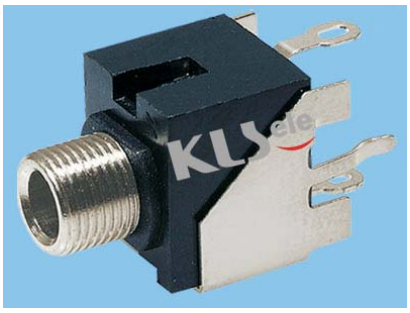

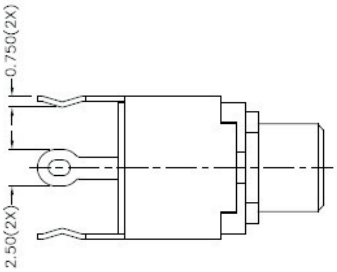

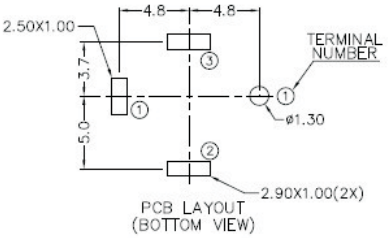

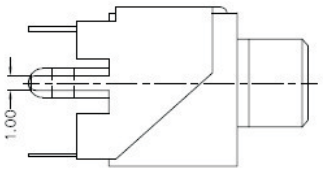

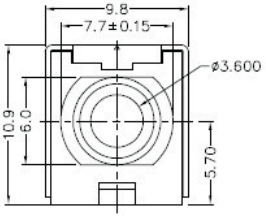

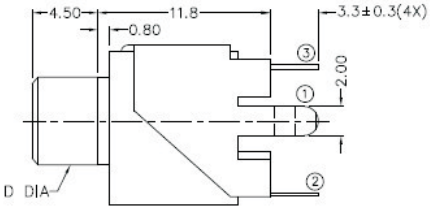

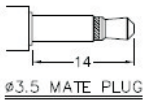

MODEL NO.	TG-35N4-4	TG-35F5-4
D DIA	THREADED M6X0.5	FLASHED ø5.5
SCHEMATIC		

* MATERIAL

TERMINAL 1 : COLD ROLLED STEEL
TERMINAL 2 : COPPER ALLOY
TERMINAL 3 : BRASS
BUSHING : BRASS
HOUSING : PBT

ORDER INFORMATION

Product No. : KLS1-TG-3.5-002A

Pos. NO.

Series NO.

3.5mm Mono Jack * Stereo Jack Series

KLS1-TG-3.5-003A (Dip Mono Jack)

Housing Material / Center Pin Material	PBT / Brass
Rated Load	DC 12V 0.5A Max
Contact resistance	⩽0.03Ω
Insulation resistance	⩾100MΩ
Withstand voltage	AC 500V(50Hz) 1min
Actuating Force	2.2~20N
Life	5000Time



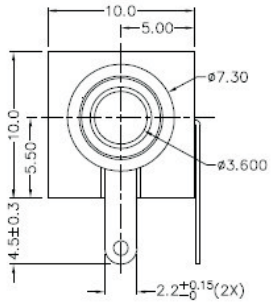

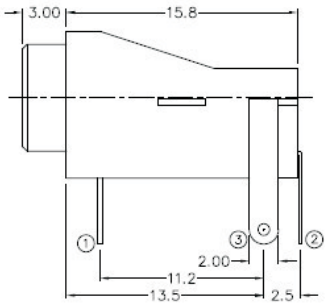

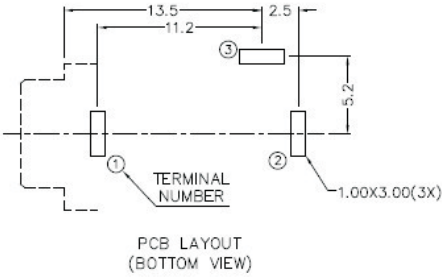

PCB LAYOUT
(BOTTOM VIEW)

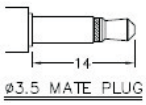

MODEL NO.	TH-35C
SCHEMATIC	1 3 2

✳ MATERIAL

TERMINAL 1	: BRASS
TERMINAL 2	: COPPER ALLOY
TERMINAL 3	: BRASS
BUSHING	: BRASS
INSULATION CAP	: PC
HOUSING	: PBT

ORDER INFORMATION

Product No. : KLS1-TG-3.5-003A

Pos. NO.

Series NO.

3.5mm Mono Jack * Stereo Jack Series

KLS1-TSJ-3.5-001A (Dip Stereo Jack)

Housing Material / Center Pin Material	PBT / Brass
Rated Load	DC 12V 0.5A Max
Contact resistance	⩽0.03Ω
Insulation resistance	⩾100MΩ
Withstand voltage	AC 500V(50Hz) 1min
Actuating Force	2.2~20N
Life	5000Time



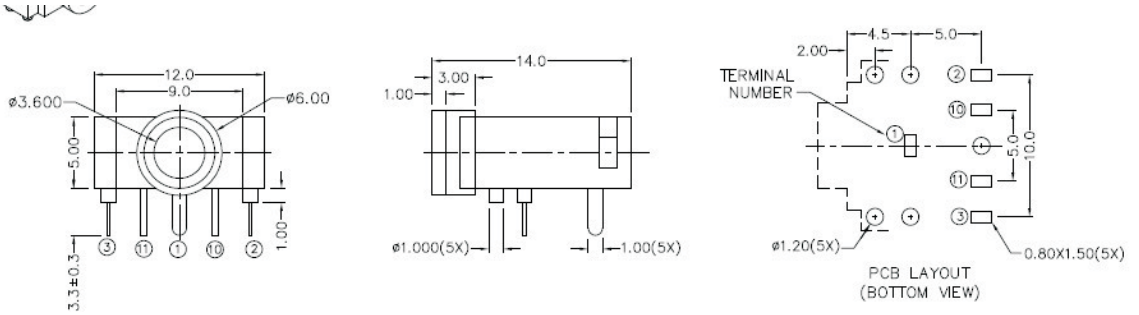

MODEL NO.	TSH-3515	TSH-3514A	TSH-3514B	TSH-3513	TSH-3513A	TSH-3512
SCHEMATIC	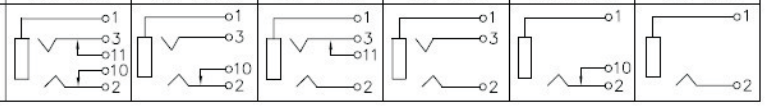					

*MATERIAL

TERMINAL 1	:COPPER ALLOY
TERMINAL 2	:COPPER ALLOY
TERMINAL 3	:COPPER ALLOY
TERMINAL 10	:BRASS
TERMINAL 11	:BRASS
BUSHING	:BRASS
HOUSING	:PBT

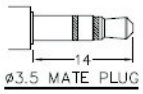

KLS1-TSJ-3.5-001B:



KLS1-TSJ-3.5-001C:



ORDER INFORMATION

Product No. : KLS1-TSJ-3.5-001A

Pos. NO.

Series NO.

3.5mm Mono Jack * Stereo Jack Series

KLS1-TSJ-3.5-002A (Dip Stereo Jack)

Housing Material / Center Pin Material	PBT / Brass
Rated Load	DC 12V 1A Max
Contact resistance	⩽0.03Ω
Insulation resistance	⩾100MΩ
Withstand voltage	AC 500V(50Hz) 1min
Actuating Force	3~20N
Life	5000Time



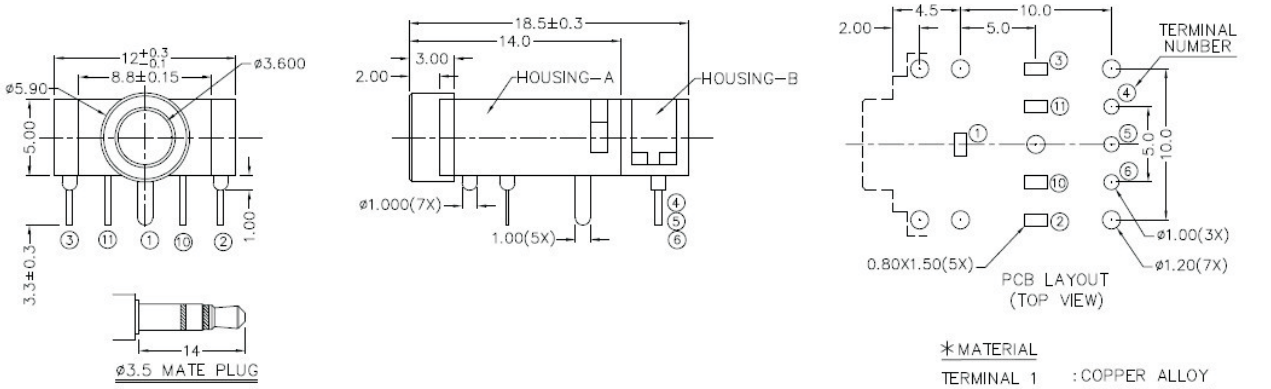

MODEL NO.	TSH—3615—12	TSH—3614A—12	TSH—3614B—12	TSH—3613—12	TSH—3613A—12	TSH—3612—12
SCHEMATIC	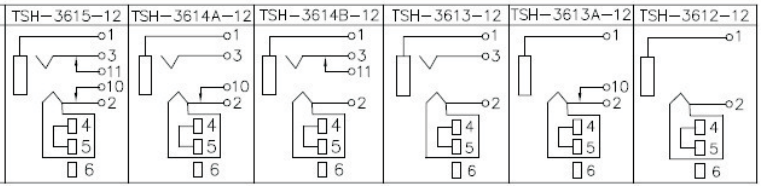					

✳MATERIAL

TERMINAL 1	:COPPER ALLOY
TERMINAL 2	:COPPER ALLOY
TERMINAL 3	:COPPER ALLOY
TERMINAL 10	:BRASS
TERMINAL 11	:BRASS
TERMINAL4,5,6	:BRASS
HOUSING—A	:PA66
HOUSING—B	:PA66
INSULATOR	:PA66
PIN BOARD	:PA66
CONTACT CLIP	:C5210R—EH AG CLAD

KLS1-TSJ-3.5-002B:

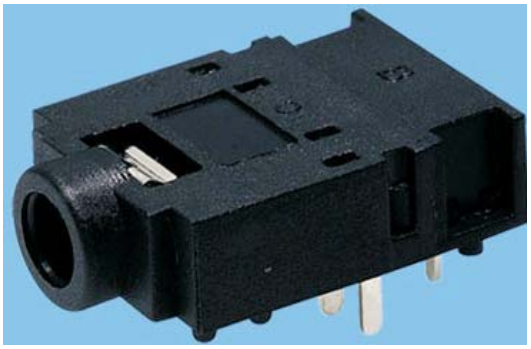

ORDER INFORMATION

Product No. : KLS1-TSJ-3.5-002A

Pos. NO.

Series NO.

3.5mm Mono Jack * Stereo Jack Series

KLS1-TSJ-3.5-003A (Dip Stereo Jack)

Housing Material / Center Pin Material	PBT / Brass
Rated Load	DC 12V 1A Max
Contact resistance	⩽0.03Ω
Insulation resistance	⩾100MΩ
Withstand voltage	AC 500V(50Hz) 1min
Actuating Force	3~20N
Life	5000Time



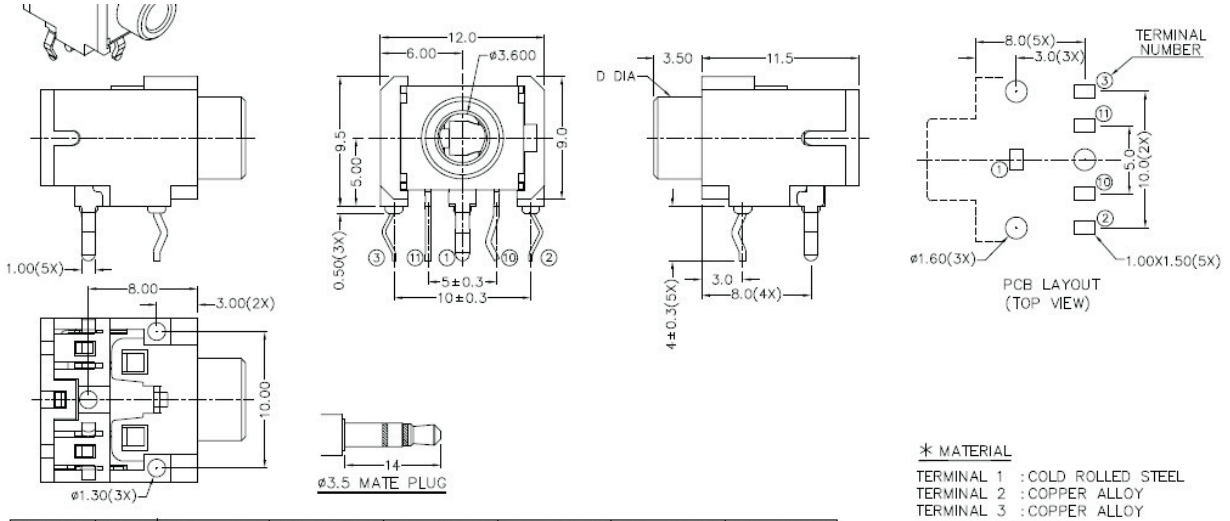

THREADED	M6X0.5	MODEL NO.	TSH-3575N	TSH-3574AN	TSH-3574BN	TSH-3573N	TSH-3573AN
FLASHED	ø6.0	MODEL NO.	TSH-3575F	TSH-3574AF	TSH-3574BF	TSH-3573F	TSH-3573AF
D DIA		SCHEMATIC					

✳ MATERIAL

TERMINAL 1	: COLD ROLLED STEEL
TERMINAL 2	: COPPER ALLOY
TERMINAL 3	: COPPER ALLOY
TERMINAL 10	: BRASS
TERMINAL 11	: BRASS
BUSHING	: BRASS
SPRING	: COPPER ALLOY
HOUSING	: PBT
COVER	: PBT

KLS1-TSJ-3.5-003B :



KLS1-TSJ-3.5-003C :



ORDER INFORMATION

Product No. : KLS1-TSJ-3.5-003A

Pos. NO.

Series NO.

3.5mm Mono Jack * Stereo Jack Series

KLS1-TSJ-3.5-004A (Dip Stereo Jack)

Housing Material / Center Pin Material	PBT / Brass
Rated Load	DC 12V 1A Max
Contact resistance	⩽0.03Ω
Insulation resistance	⩾100MΩ
Withstand voltage	AC 500V(50Hz) 1min
Actuating Force	3~20N
Life	5000Time



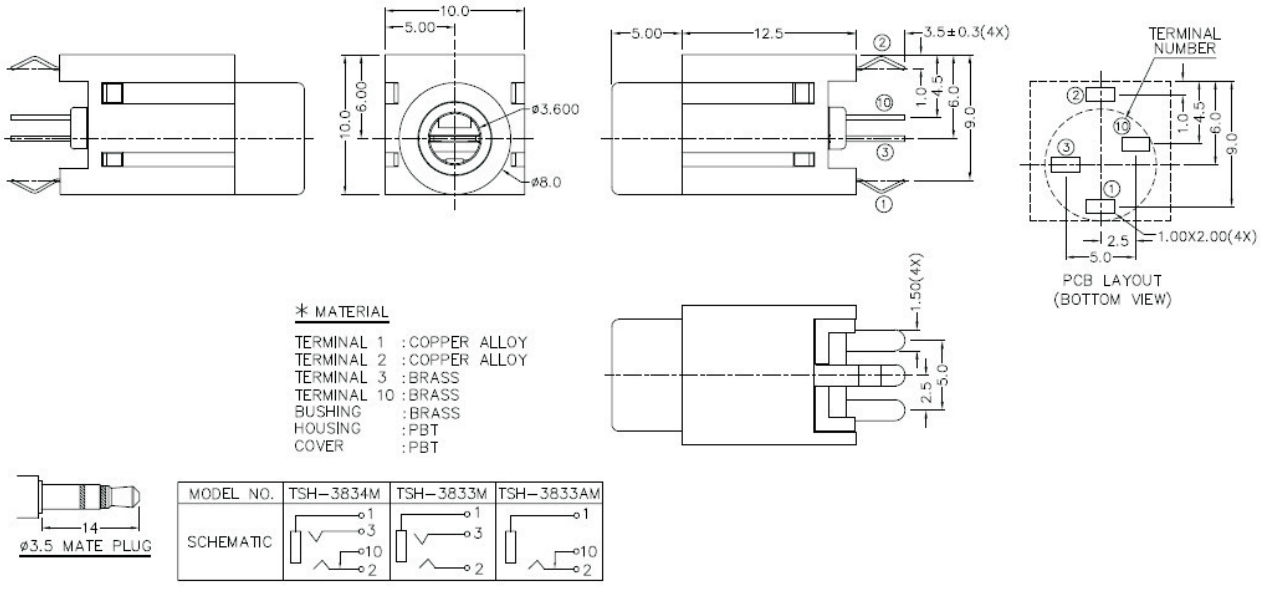

✳ MATERIAL

TERMINAL 1	:COPPER ALLOY
TERMINAL 2	:COPPER ALLOY
TERMINAL 3	:BRASS
TERMINAL 10	:BRASS
BUSHING	:BRASS
HOUSING	:PBT
COVER	:PBT

MODEL NO.	TSH-3834M	TSH-3833M	TSH-3833AM
SCHEMATIC			

KLS1-TSJ-3.5-004B:



ORDER INFORMATION

Product No. : KLS1-TSJ-3.5-004A

Pos. NO.

Series NO.

3.5mm Mono Jack * Stereo Jack Series

KLS1-TSJ-3.5-005B (Dip Stereo Jack)

Housing Material / Center Pin Material	PBT / Brass
Rated Load	DC 12V 1A Max
Contact resistance	⩽0.03Ω
Insulation resistance	⩾100MΩ
Withstand voltage	AC 500V(50Hz) 1min
Actuating Force	3~20N
Life	5000Time



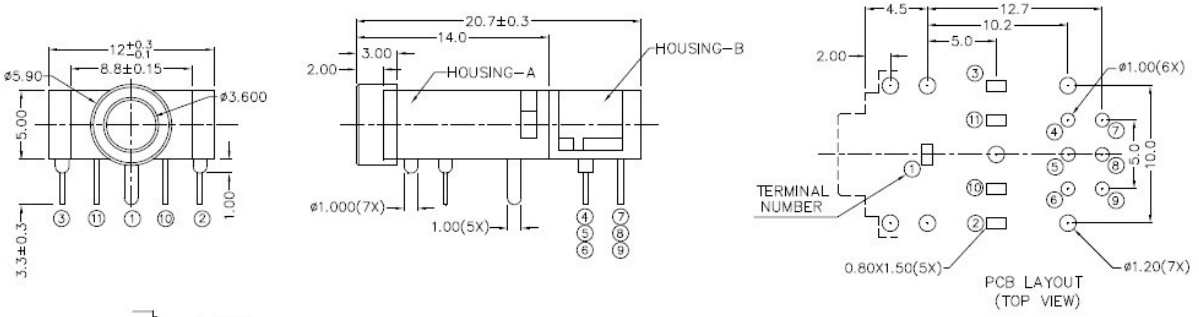

MODEL NO.	TSH-3615-22	TSH-3614A-22	TSH-3614B-22	TSH-3613-22	TSH-3613A-22	TSH-3612-22
SCHEMATIC	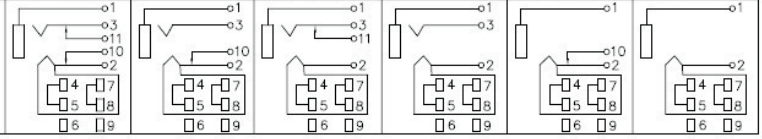					

*MATERIAL

TERMINAL 1	:COPPER ALLOY
TERMINAL 2	:COPPER ALLOY
TERMINAL 3	:COPPER ALLOY
TERMINAL 10	:BRASS
TERMINAL 11	:BRASS
TERMINAL4,5,6,7,8,9	:BRASS
HOUSING-A	:PA66
HOUSING-B	:PA66
INSULATOR	:PA66
PIN BOARD	:PA66
CONTACT CLIP	:C5210R-EH AG CLAD

KLS1-TSJ-3.5-005A:

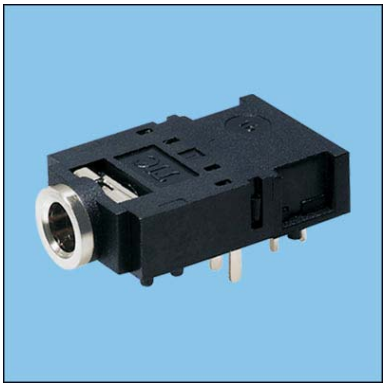

ORDER INFORMATION

Product No. : KLS1-TSJ-3.5-005B

Pos. NO.

Series NO.

3.5mm Mono Jack * Stereo Jack Series

KLS1-TSJ-3.5-006A (Dip Stereo Jack)

Housing Material / Center Pin Material	PBT / Brass
Rated Load	DC 12V 1A Max
Contact resistance	⩽0.03Ω
Insulation resistance	⩾100MΩ
Withstand voltage	AC 500V(50Hz) 1min
Actuating Force	3~20N
Life	5000Time



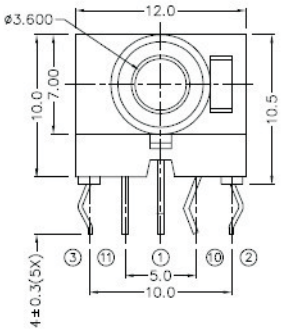

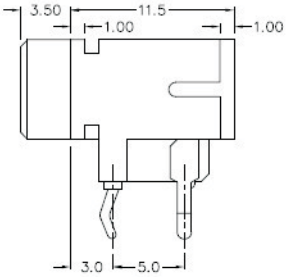

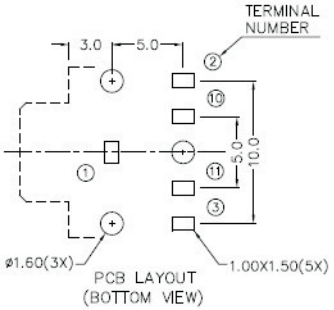

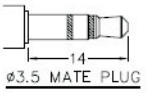

MODEL NO.	TSH-3565	TSH-3564A	TSH-3564B	TSH-3563	TSH-3563A	TSH-3562
SCHEMATIC	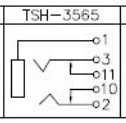	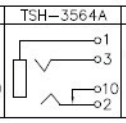	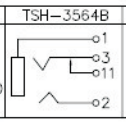	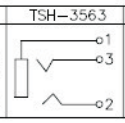	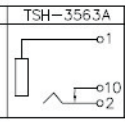	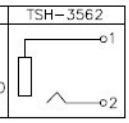

✳ MATERIAL

TERMINAL 1 : BRASS
TERMINAL 2 : COPPER ALLOY
TERMINAL 3 : COPPER ALLOY
TERMINAL 10 : BRASS
TERMINAL 11 : BRASS
HOUSING : PBT
COVER : PBT

KLS1-TSJ-3.5-006B:

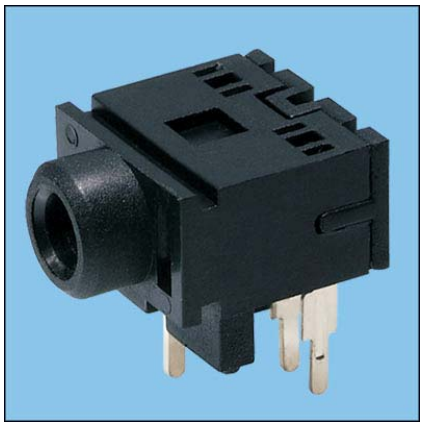

ORDER INFORMATION

Product No. : KLS1-TSJ-3.5-006A

Pos. NO.

Series NO.

3.5mm Mono Jack * Stereo Jack Series

KLS1-TSJ-3.5-007A (Dip Stereo Jack)

Housing Material / Center Pin Material	PBT / Brass
Rated Load	DC 12V 1A Max
Contact resistance	⩽0.03Ω
Insulation resistance	⩾100MΩ
Withstand voltage	AC 500V(50Hz) 1min
Actuating Force	3~20N
Life	5000Time



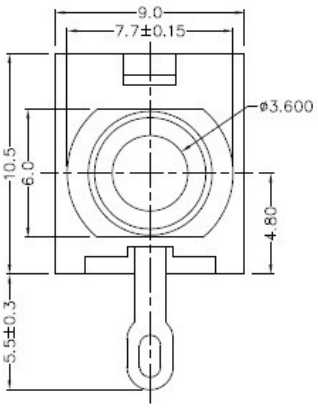

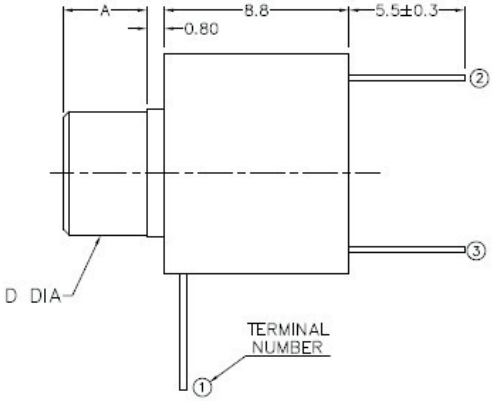

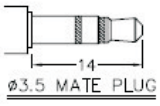

MODEL NO.	TG-35SN	TG-35SF	TG-35SN2	TG-35SF2
D DIA	THREADED	FLASHED	THREADED	FLASHED
	M6X0.5	ø6.0	M6X0.5	ø6.0
A	4.0mm	4.0mm	3.5mm	3.5mm
SCHEMATIC	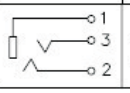	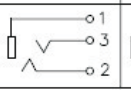	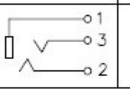	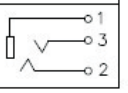

✳ MATERIAL

TERMINAL 1 : BRASS
TERMINAL 2 : COPPER ALLOY
TERMINAL 3 : BRASS
BUSHING : BRASS
HOUSING : PBT

ORDER INFORMATION

Product No. : KLS1-TSJ-3.5-007A

Pos. NO.

Series NO.

3.5mm Mono Jack * Stereo Jack Series

KLS1-TSJ-3.5-008A (Dip Stereo Jack)

Housing Material / Center Pin Material	PBT / Brass
Rated Load	DC 12V 1A Max
Contact resistance	⩽0.03Ω
Insulation resistance	⩾100MΩ
Withstand voltage	AC 500V(50Hz) 1min
Actuating Force	3~20N
Life	5000Time

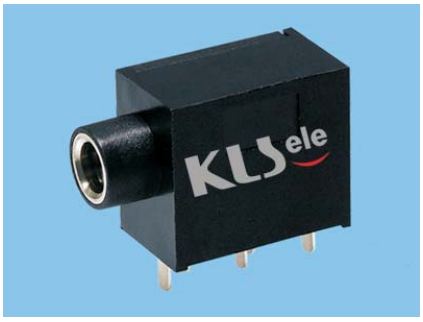

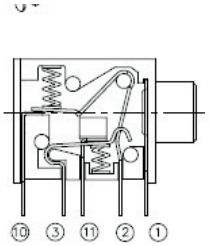

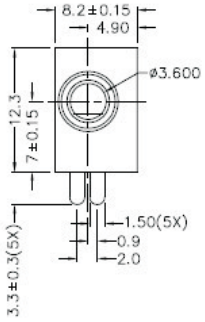

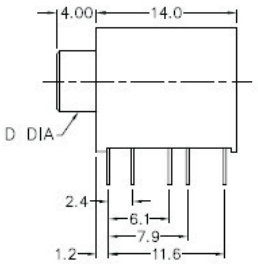

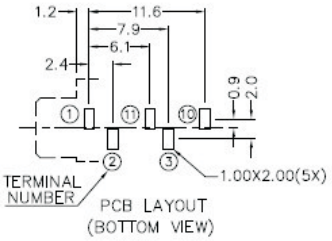

THREADED	M6X0.5	MODEL NO.	TSH-3555N	TSH-3554AN	TSH-3554BN	TSH-3553N	TSH-3553AN
FLASHED	ø6.0	MODEL NO.	TSH-3555F	TSH-3554AF	TSH-3554BF	TSH-3553F	TSH-3553AF
D DIA		SCHEMATIC	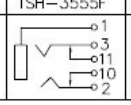		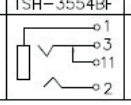	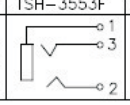	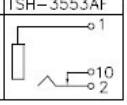

* MATERIAL

TERMINAL 1	:BRASS
TERMINAL 2	:BRASS
TERMINAL 3	:BRASS
TERMINAL 10	:BRASS
TERMINAL 11	:BRASS
BUSHING	:BRASS
SPRING	:STAINLESS STEEL
HOUSING	:PBT
COVER	:PBT

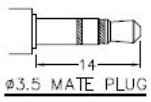

KLS1-TSJ-3.5-008B / KLS1-TSJ-3.5-008C

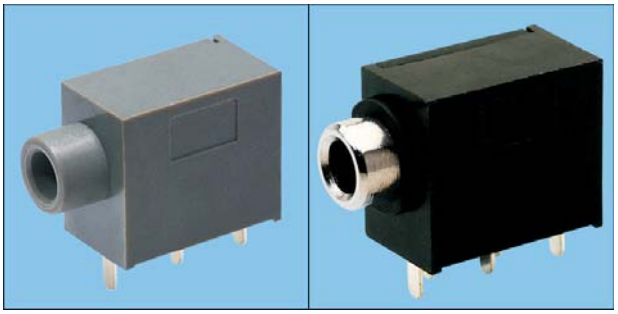

KLS1-TSJ-3.5-008D / KLS1-TSJ-3.5-008E

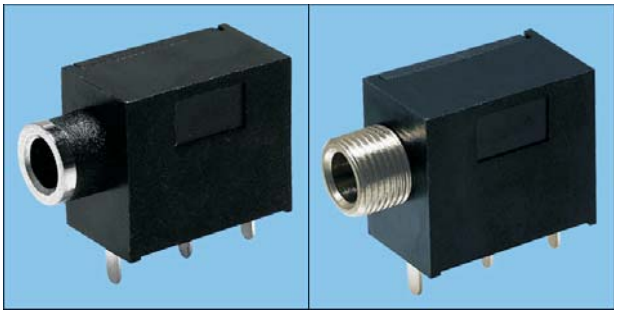

ORDER INFORMATION

Product No. : KLS1-TSJ-3.5-008A

Pos. NO.

Series NO.

3.5mm Mono Jack * Stereo Jack Series

KLS1-TSJ-3.5-009A (Dip Stereo Jack)

Housing Material / Center Pin Material	PBT / Brass
Rated Load	DC 12V 1A Max
Contact resistance	⩽0.03Ω
Insulation resistance	⩾100MΩ
Withstand voltage	AC 500V(50Hz) 1min
Actuating Force	3~20N
Life	5000Time



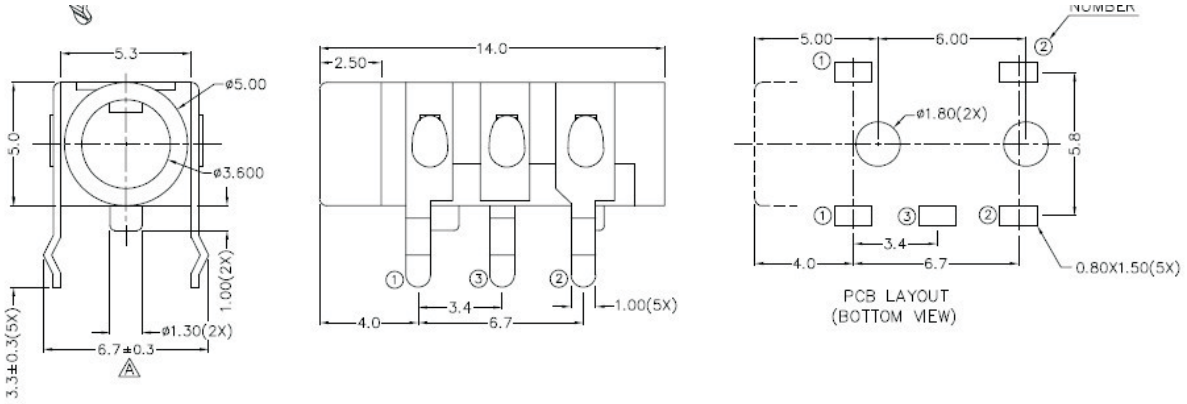

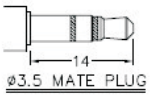

MODEL NO.	TSH-354
SCHEMATIC	1, 3, 2

∗ MATERIAL

TERMINAL 1 : COPPER ALLOY
TERMINAL 2 : COPPER ALLOY
TERMINAL 3 : COPPER ALLOY
HOUSING : PBT

ORDER INFORMATION

Product No. : KLS1-TSJ-3.5-009A

Pos. NO.

Series NO.

3.5mm Mono Jack * Stereo Jack Series

KLS1-TSJ-3.5-010A (Dip Stereo Jack)

Housing Material / Center Pin Material	PBT / Brass
Rated Load	DC 12V 1A Max
Contact resistance	⩽0.03Ω
Insulation resistance	⩾100MΩ
Withstand voltage	AC 500V(50Hz) 1min
Actuating Force	3~20N
Life	5000Time

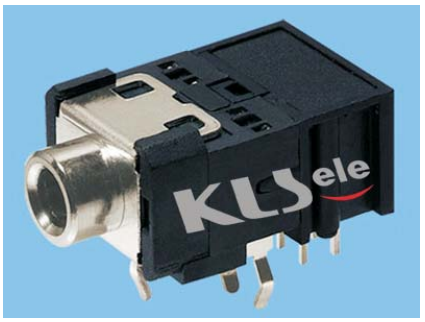

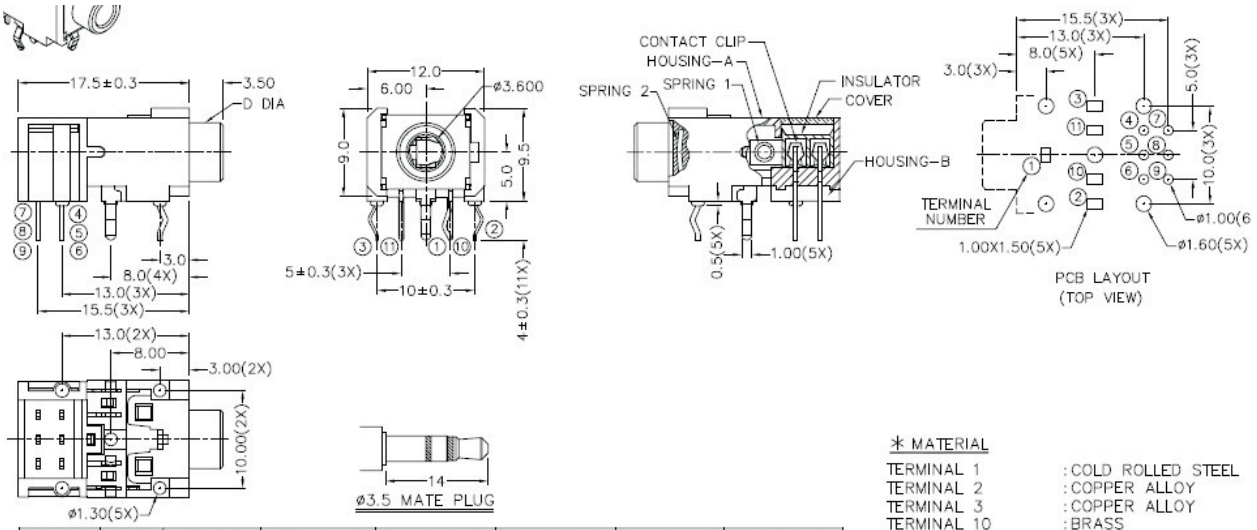

THREADED	M6X0.5	MODEL NO.	TSH-3575N-22	TSH-3574AN-22	TSH-3574BN-22	TSH-3573N-22	TSH-3573AN-22
FLASHED	ø6.0	MODEL NO.	TSH-3575F-22	TSH-3574AF-22	TSH-3574BF-22	TSH-3573F-22	TSH-3573AF-22
D DIA		SCHEMATIC	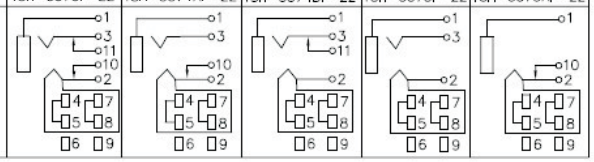				

✳ MATERIAL

TERMINAL 1	: COLD ROLLED STEEL
TERMINAL 2	: COPPER ALLOY
TERMINAL 3	: COPPER ALLOY
TERMINAL 10	: BRASS
TERMINAL 11	: BRASS
TERMINAL 4,5,6,7,8,9	: BRASS
BUSHING	: BRASS
HOUSING-A	: PBT
HOUSING-B	: PBT
COVER	: PBT
INSULATOR	: PA66
SPRING 1	: STAINLESS STEEL
SPRING 2	: COPPER ALLOY
CONTACT CLIP	: C5210R-EH AG CLAD

ORDER INFORMATION

Product No. : KLS1-TSJ-3.5-010A

Pos. NO.

Series NO.

3.5mm Mono Jack * Stereo Jack Series

KLS1-TSJ-3.5-011A (Dip Stereo Jack)

Housing Material / Center Pin Material	PBT / Brass
Rated Load	DC 12V 1A Max
Contact resistance	⩽0.03Ω
Insulation resistance	⩾100MΩ
Withstand voltage	AC 500V(50Hz) 1min
Actuating Force	3~20N
Life	5000Time



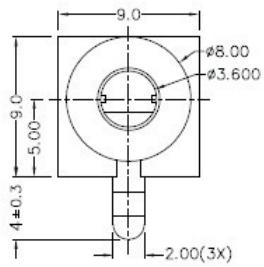

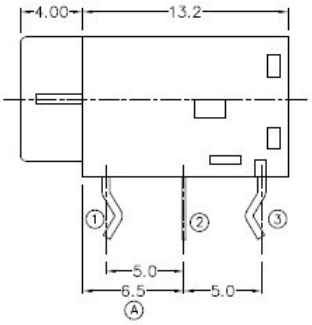

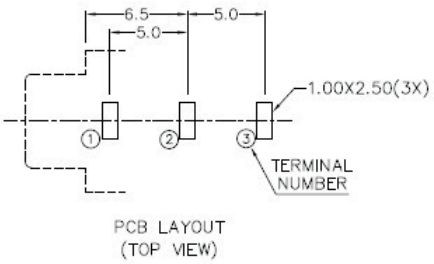

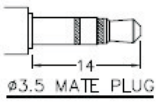

MODEL NO.	TSH-3583	TSH-3583A
SCHEMATIC	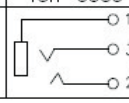	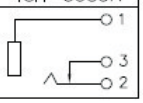

* MATERIAL

TERMINAL 1 : BRASS
TERMINAL 2 : COPPER ALLOY
TERMINAL 3 : BRASS
HOUSING : PBT

ORDER INFORMATION

Product No. : KLS1-TSJ-3.5-011A

Pos. NO.

Series NO.

3.5mm Mono Jack * Stereo Jack Series

KLS1-TSJ-3.5-012A (Dip Stereo Jack)

Housing Material / Center Pin Material	PBT / Brass
Rated Load	DC 12V 1A Max
Contact resistance	⩽0.03Ω
Insulation resistance	⩾100MΩ
Withstand voltage	AC 500V(50Hz) 1min
Actuating Force	3~20N
Life	5000Time



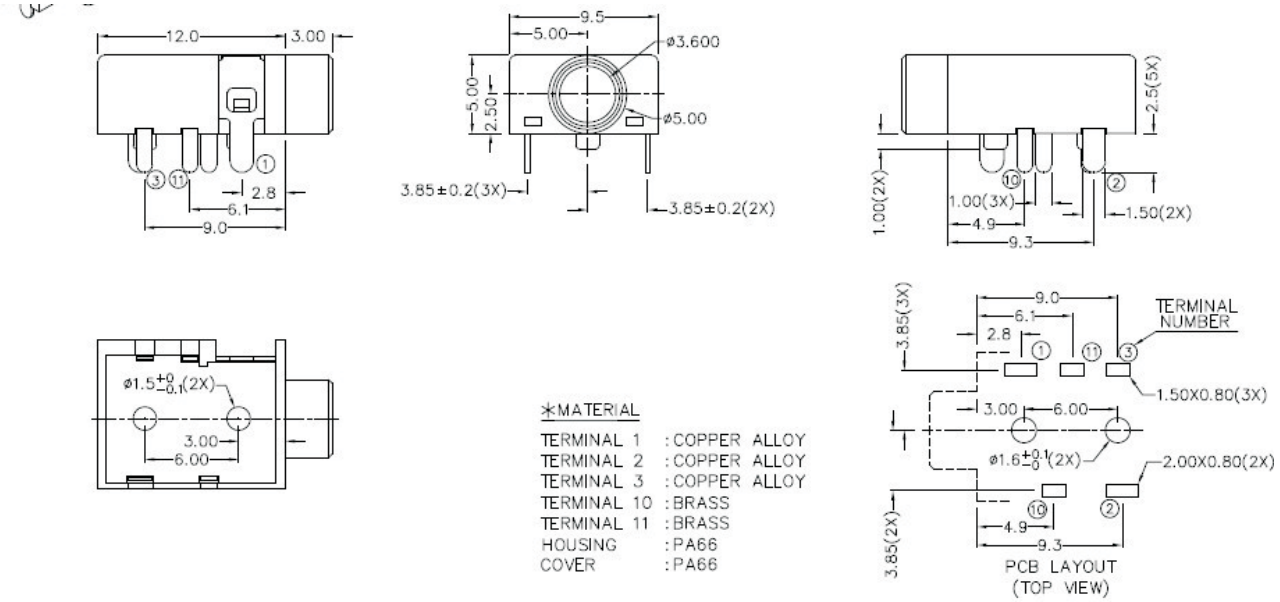

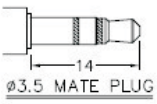

MODEL NO.	TSH-3675	TSH-3674A	TSH-3674B	TSH-3673	TSH-3673A
SCHEMATIC	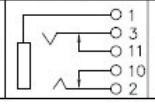	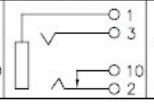	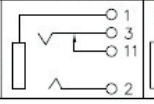	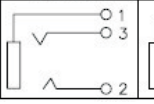	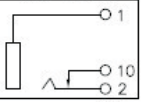

ORDER INFORMATION

Product No. : KLS1-TSJ-3.5-012A

Pos. NO.

Series NO.

3.5mm Mono Jack * Stereo Jack Series

KLS1-TSJ-3.5-013A (Dip Stereo Jack)

Housing Material / Center Pin Material	PBT / Brass
Rated Load	DC 12V 1A Max
Contact resistance	⩽0.03Ω
Insulation resistance	⩾100MΩ
Withstand voltage	AC 500V(50Hz) 1min
Actuating Force	3~20N
Life	5000Time



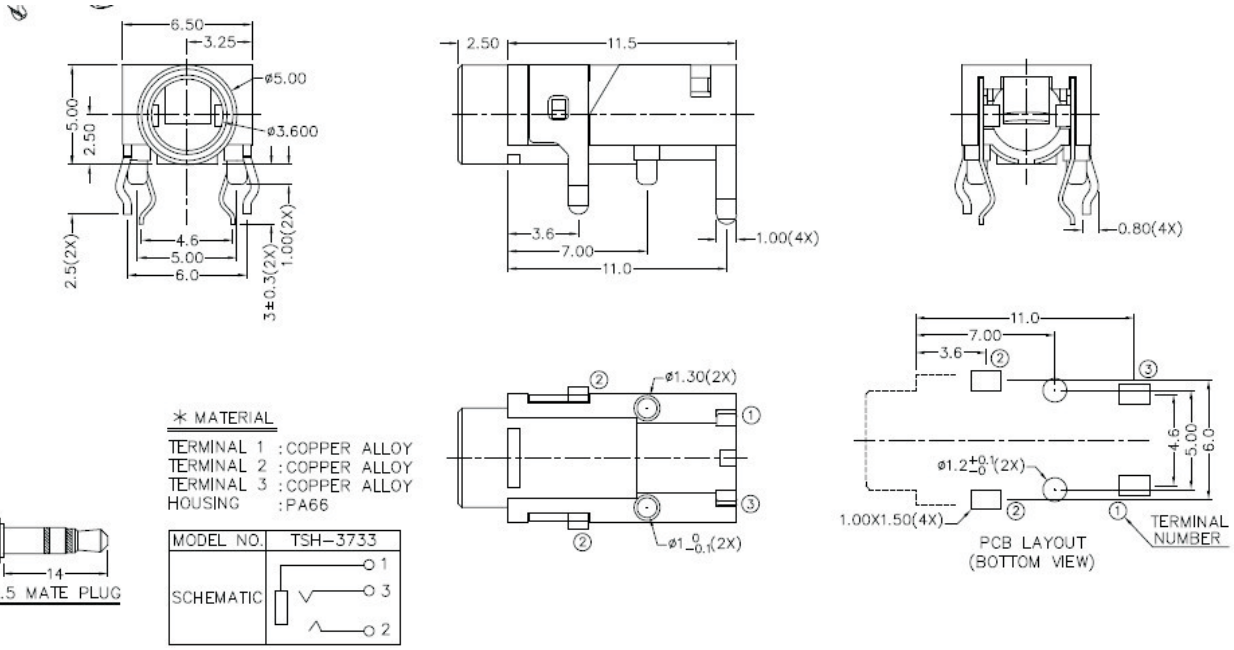

ORDER INFORMATION

Product No. : KLS1-TSJ-3.5-013A

Pos. NO.

Series NO.

3.5mm Mono Jack * Stereo Jack Series

KLS1-TSJ-3.5-014A (Dip Stereo Jack)

Housing Material / Center Pin Material	PBT / Brass
Rated Load	DC 12V 1A Max
Contact resistance	⩽0.03Ω
Insulation resistance	⩾100MΩ
Withstand voltage	AC 500V(50Hz) 1min
Actuating Force	3~20N
Life	5000Time



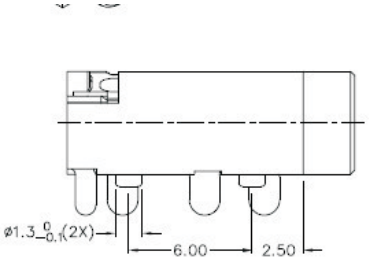

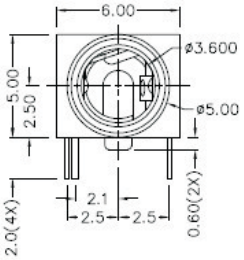

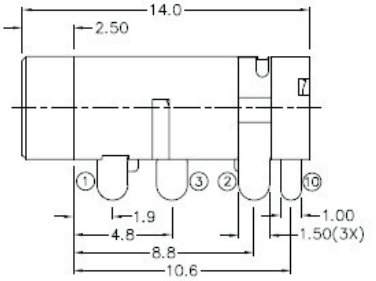

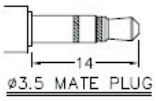

* MATERIAL

TERMINAL 1 : COPPER ALLOY
TERMINAL 2 : COPPER ALLOY
TERMINAL 3 : COPPER ALLOY
TERMINAL 10 : BRASS
HOUSING : PA66

MODEL NO.	TSH-3814	TSH-3813	TSH-3813A
SCHEMATIC	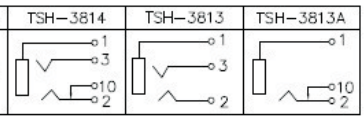		

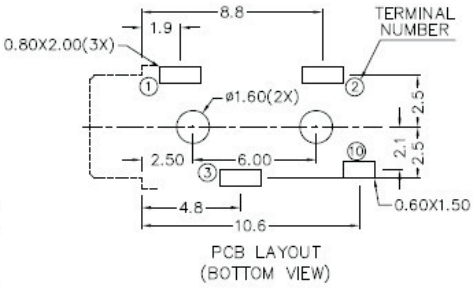

ORDER INFORMATION

Product No. : KLS1-TSJ-3.5-014A

Pos. NO.

Series NO.

3.5mm Mono Jack * Stereo Jack Series

KLS1-TSJ-3.5-015A (Dip Stereo Jack)

Housing Material / Center Pin Material	PBT / Brass
Rated Load	DC 12V 1A Max
Contact resistance	⩽0.03Ω
Insulation resistance	⩾100MΩ
Withstand voltage	AC 500V(50Hz) 1min
Actuating Force	3~20N
Life	5000Time



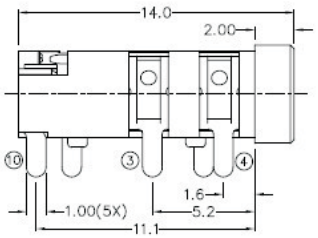

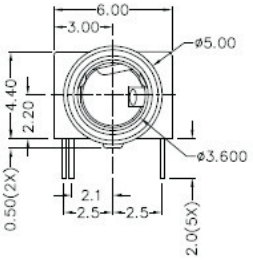

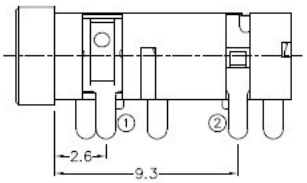

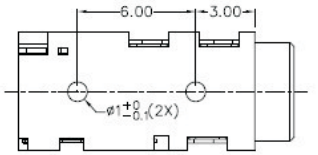

✳ MATERIAL

TERMINAL 1 : COPPER ALLOY
TERMINAL 2 : COPPER ALLOY
TERMINAL 3 : COPPER ALLOY
TERMINAL 4 : COPPER ALLOY
TERMINAL 10 : BRASS
HOUSING : PA66

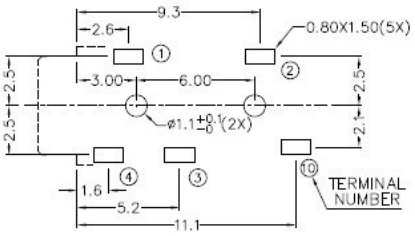

PCB LAYOUT
(BOTTOM VIEW)

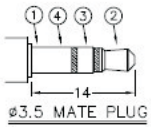

ø3.5 MATE PLUG

MODEL NO.	TSH-3865	TSH-3864	TSH-3864A	TSH-3863
SCHEMATIC	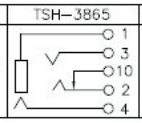	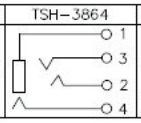	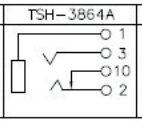	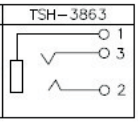

ORDER INFORMATION

Product No. : KLS1-TSJ-3.5-015A

Pos. NO.

Series NO.

3.5mm Mono Jack * Stereo Jack Series

KLS1-TSJ-3.5-016A (Dip Stereo Jack)

Housing Material / Center Pin Material	PBT / Brass
Rated Load	DC 12V 1A Max
Contact resistance	⩽0.03Ω
Insulation resistance	⩾100MΩ
Withstand voltage	AC 500V(50Hz) 1min
Actuating Force	3~20N
Life	5000Time



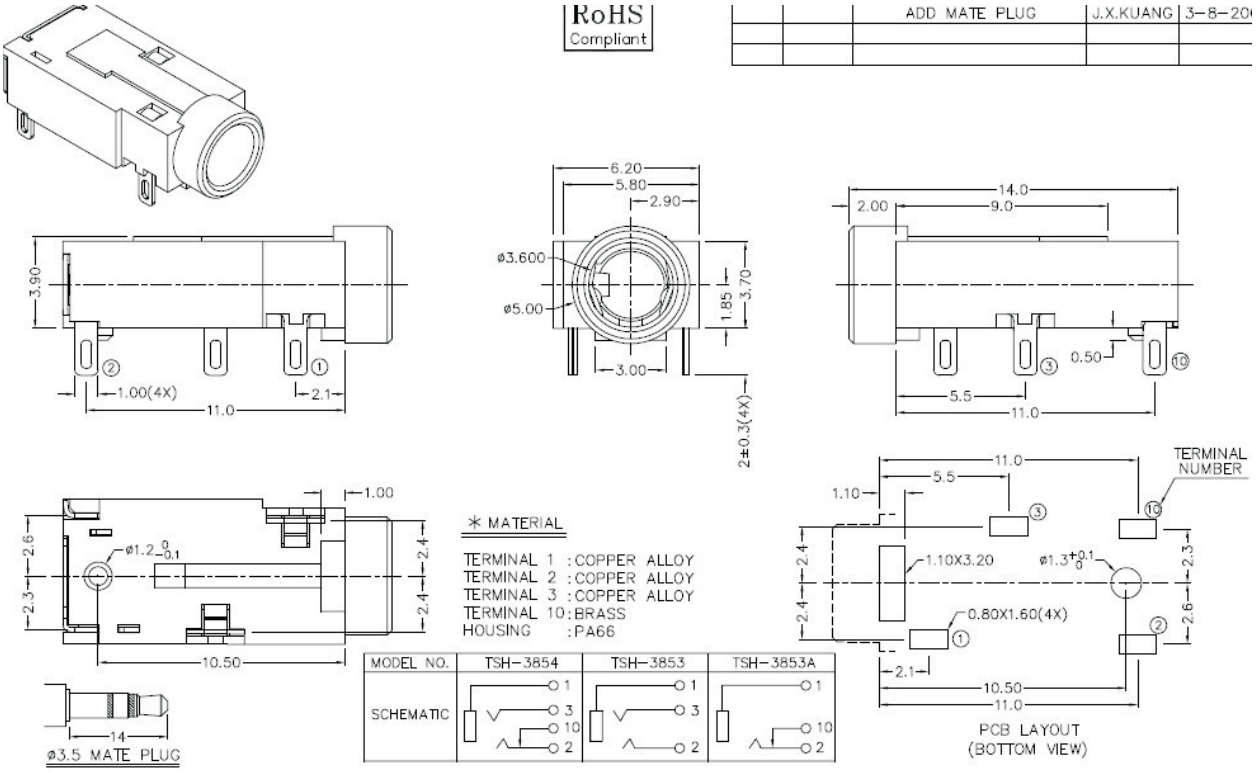

ORDER INFORMATION

Product No. : KLS1-TSJ-3.5-016A

Pos. NO.

Series NO.

3.5mm Mono Jack * Stereo Jack Series

KLS1-TSJ-3.5-017A (Dip Stereo Jack)

Housing Material / Center Pin Material	PA66 / Brass
Rated Load	DC 12V 1A Max
Contact resistance	⩽0.03Ω
Insulation resistance	⩾100MΩ
Withstand voltage	AC 500V(50Hz) 1min
Actuating Force	3~20N
Life	5000Time



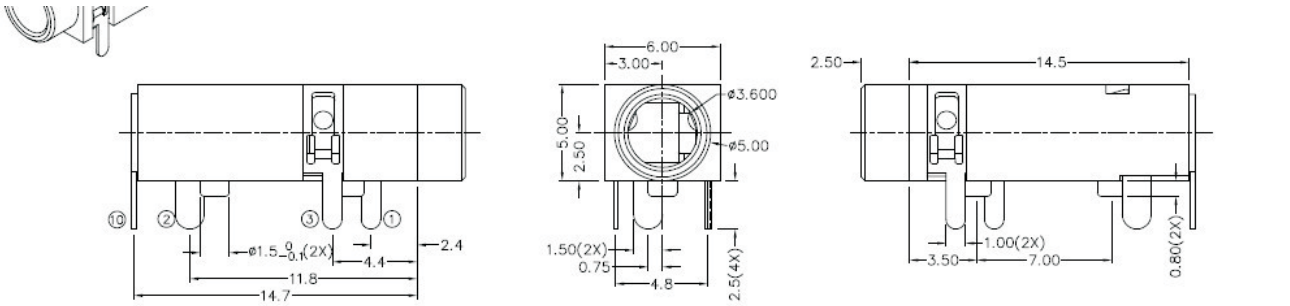

MODEL NO.	TSH-3874	TSH-3873	TSH-3873A
SCHEMATIC	1, 3, 10, 2	1, 3, 2	1, 10, 2

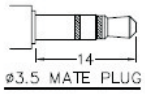

* MATERIAL

TERMINAL 1 : COPPER ALLOY
TERMINAL 2 : COPPER ALLOY
TERMINAL 3 : COPPER ALLOY
TERMINAL 10 : BRASS
HOUSING : PA66

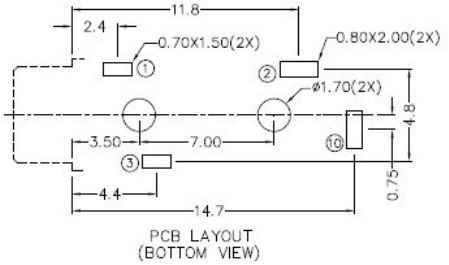

PCB LAYOUT
(BOTTOM VIEW)

ORDER INFORMATION

Product No. : KLS1-TSJ-3.5-017A

Pos. NO.

Series NO.

3.5mm Mono Jack * Stereo Jack Series

KLS1-SSJ-3.5-001A (Dip Stereo Jack)



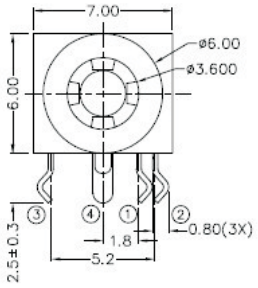

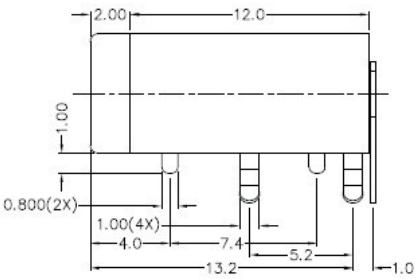

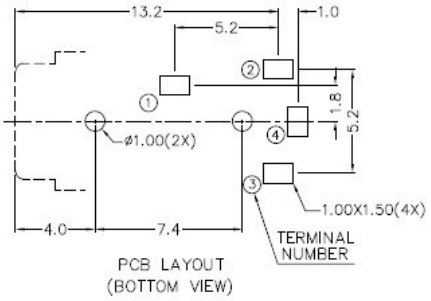

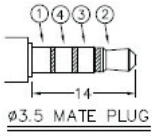

MODEL NO.	TSH-3724	TSH-3723
SCHEMATIC	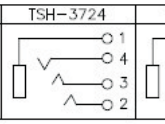	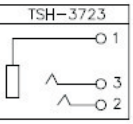

* MATERIAL

TERMINAL 1 : COPPER ALLOY
TERMINAL 2 : COPPER ALLOY
TERMINAL 3 : COPPER ALLOY
TERMINAL 4 : COPPER ALLOY
HOUSING : PBT

ORDER INFORMATION

Product No. : KLS1-SSJ-3.5-001A

Pos. NO.

Series NO.

All specification & dimensions are subject to change, Please call your nearest KLS sales represesntative for update information

3.5mm Mono Jack * Stereo Jack Series

KLS1-SSJ-3.5-002A (Dip Stereo Jack)

Housing Material / Center Pin Material	PA66 / Brass
Rated Load	DC 12V 1A Max
Contact resistance	⩽0.03Ω
Insulation resistance	⩾100MΩ
Withstand voltage	AC 500V(50Hz) 1min
Actuating Force	3~20N
Life	5000Time



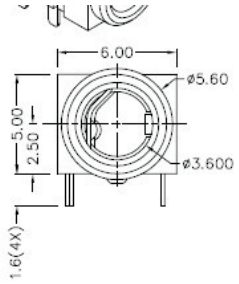

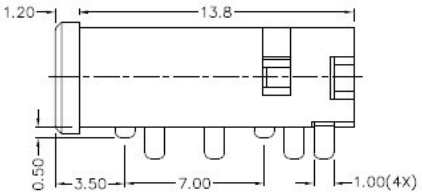

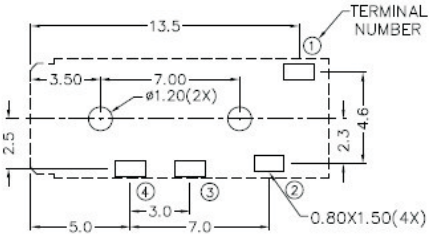

PCB LAYOUT
(BOTTOM VIEW)

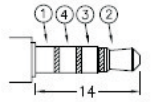

ø3.5 MATE PLUG

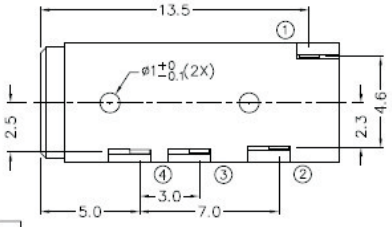

MODEL NO.	TSH-3744	TSH-3743
SCHEMATIC	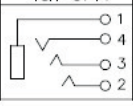	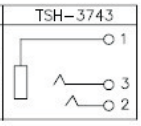

✳ MATERIAL

TERMINAL 1 : COPPER ALLOY
TERMINAL 2 : COPPER ALLOY
TERMINAL 3 : COPPER ALLOY
TERMINAL 4 : COPPER ALLOY
HOUSING : PA66

ORDER INFORMATION

Product No. : KLS1-SSJ-3.5-002A

Pos. NO.

Series NO.

3.5mm Mono Jack * Stereo Jack Series

KLS1-SSJ-3.5-003A (Dip Stereo Jack)

Housing Material / Center Pin Material	PA66 / Brass
Rated Load	DC 12V 1A Max
Contact resistance	⩽0.03Ω
Insulation resistance	⩾100MΩ
Withstand voltage	AC 500V(50Hz) 1min
Actuating Force	3~20N
Life	5000Time



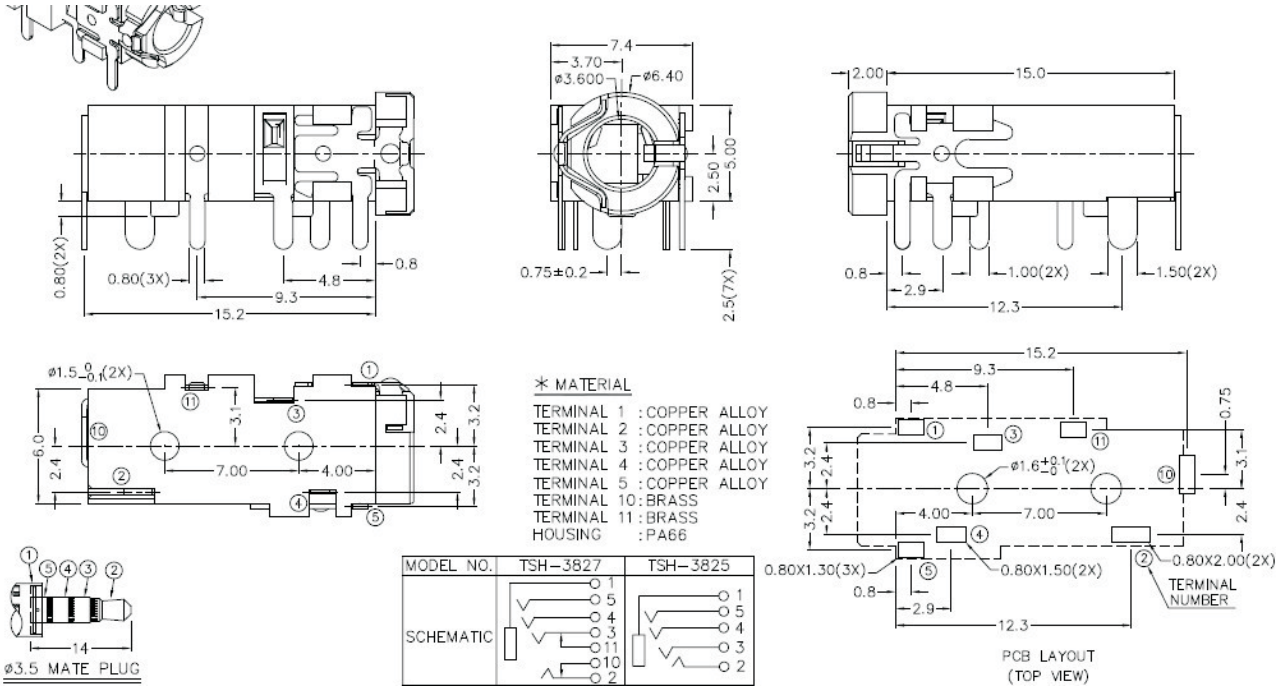

ORDER INFORMATION

Product No. : KLS1-SSJ-3.5-003A

Pos. NO.

Series NO.

3.5mm Mono Jack * Stereo Jack Series

KLS1-SSJ-3.5-004A (Dip Stereo Jack)

Housing Material / Center Pin Material	PA66 / Brass
Rated Load	DC 12V 1A Max
Contact resistance	⩽0.03Ω
Insulation resistance	⩾100MΩ
Withstand voltage	AC 500V(50Hz) 1min
Actuating Force	3~20N
Life	5000Time

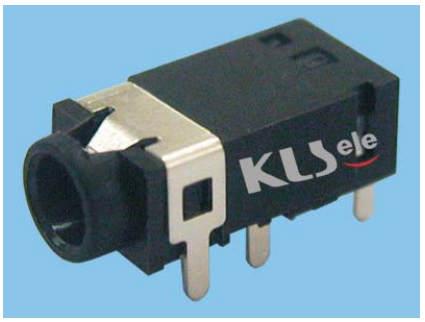

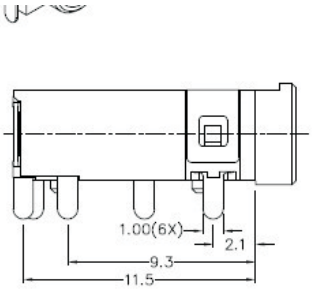

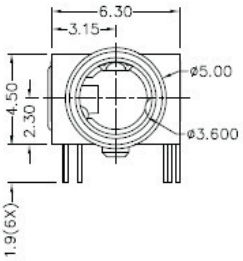

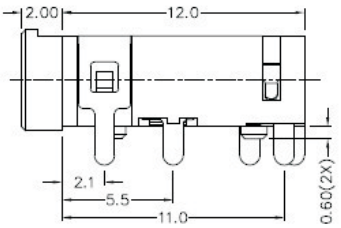

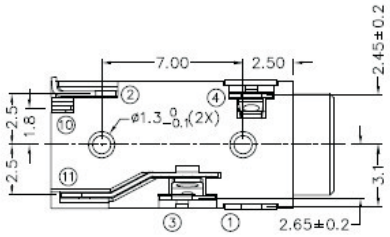

✳ MATERIAL

TERMINAL 1 : COPPER ALLOY
TERMINAL 2 : COPPER ALLOY
TERMINAL 3 : COPPER ALLOY
TERMINAL 4 : COPPER ALLOY
TERMINAL 10 : BRASS
TERMINAL 11 : BRASS
HOUSING : PA6T

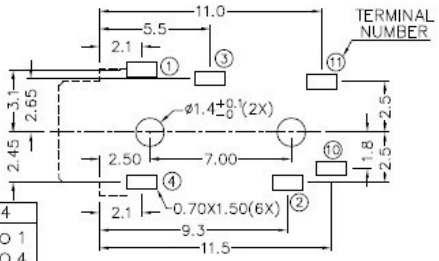

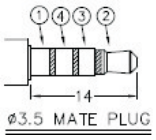

MODEL NO.	TSH-3896	TSH-3895A	TSH-3895B	TSH-3894
SCHEMATIC	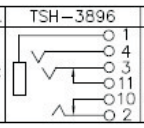	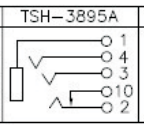	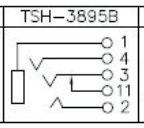	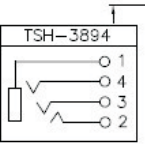

ORDER INFORMATION

Product No. : KLS1-SSJ-3.5-004A

Pos. NO.

Series NO.

3.5mm Mono Jack * Stereo Jack Series

KLS1-SSJ-3.5-005A (Dip Stereo Jack)

Housing Material / Center Pin Material	PA66 / Brass
Rated Load	DC 12V 1A Max
Contact resistance	⩽0.03Ω
Insulation resistance	⩾100MΩ
Withstand voltage	AC 500V(50Hz) 1min
Actuating Force	3~20N
Life	5000Time

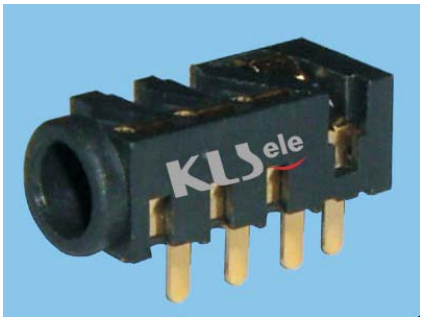

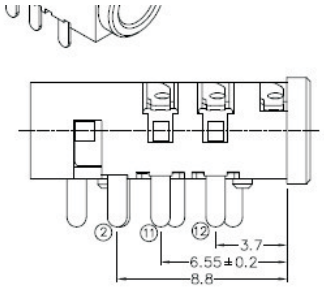

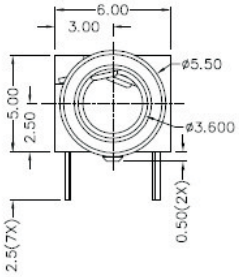

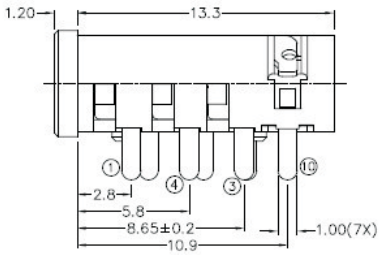

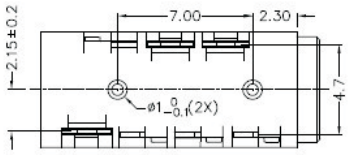

✳ MATERIAL

TERMINAL 1	:COPPER ALLOY
TERMINAL 2	:COPPER ALLOY
TERMINAL 3	:COPPER ALLOY
TERMINAL 4	:COPPER ALLOY
TERMINAL 10	:BRASS
TERMINAL 11	:BRASS
TERMINAL 12	:BRASS
HOUSING	:PA66

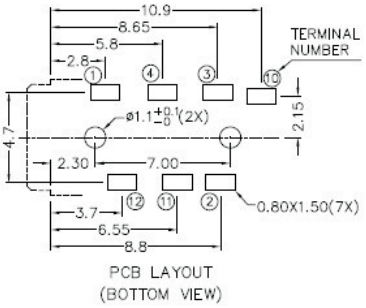

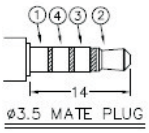

MODEL NO.	TSH-3917	TSH-3916A	TSH-3915A	TSH-3914	TSH-3915
SCHEMATIC	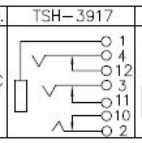	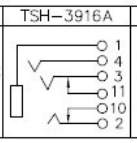	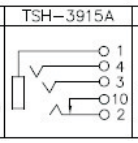	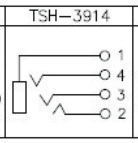	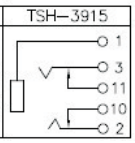

ORDER INFORMATION

Product No. : KLS1-SSJ-3.5-005A

Pos. NO.

Series NO.

3.5mm Mono Jack * Stereo Jack Series

KLS1-SSJ-3.5-006A (Dip Stereo Jack)

Housing Material / Center Pin Material	PA6T / Brass
Rated Load	DC 12V 1A Max
Contact resistance	⩽0.03Ω
Insulation resistance	⩾100MΩ
Withstand voltage	AC 500V(50Hz) 1min
Actuating Force	3~20N
Life	5000Time

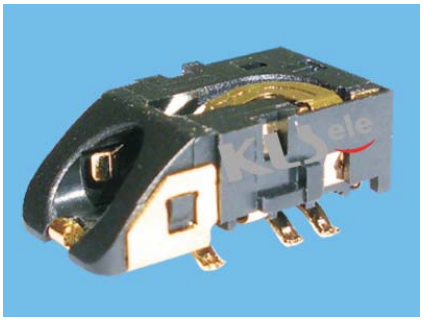

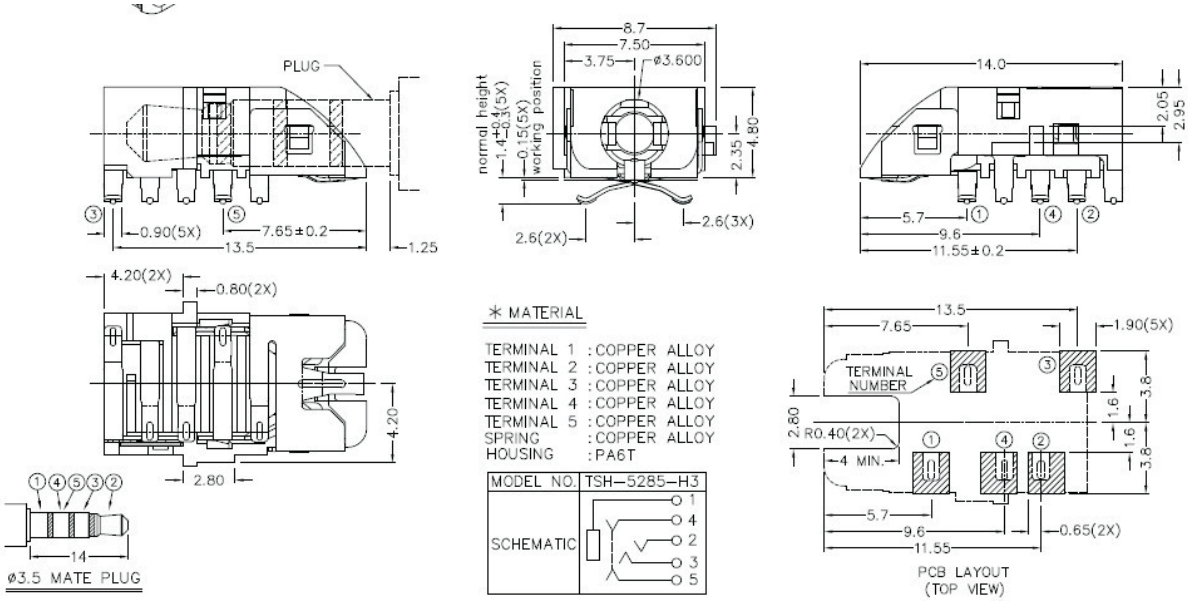

KLS1-SSJ-3.5-006B:

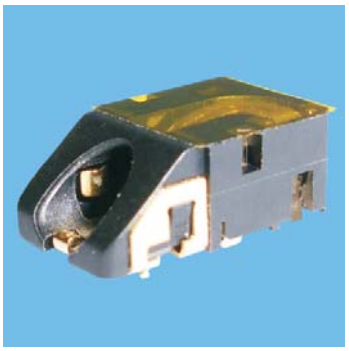

ORDER INFORMATION

Product No. : KLS1-SSJ-3.5-006A

Pos. NO.

Series NO.

3.5mm Mono Jack * Stereo Jack Series

KLS1-SSJ-3.5-007A (Dip Stereo Jack)

Housing Material / Center Pin Material	PA66 / Brass
Rated Load	DC 12V 1A Max
Contact resistance	⩽0.03Ω
Insulation resistance	⩾100MΩ
Withstand voltage	AC 500V(50Hz) 1min
Actuating Force	3~20N
Life	5000Time



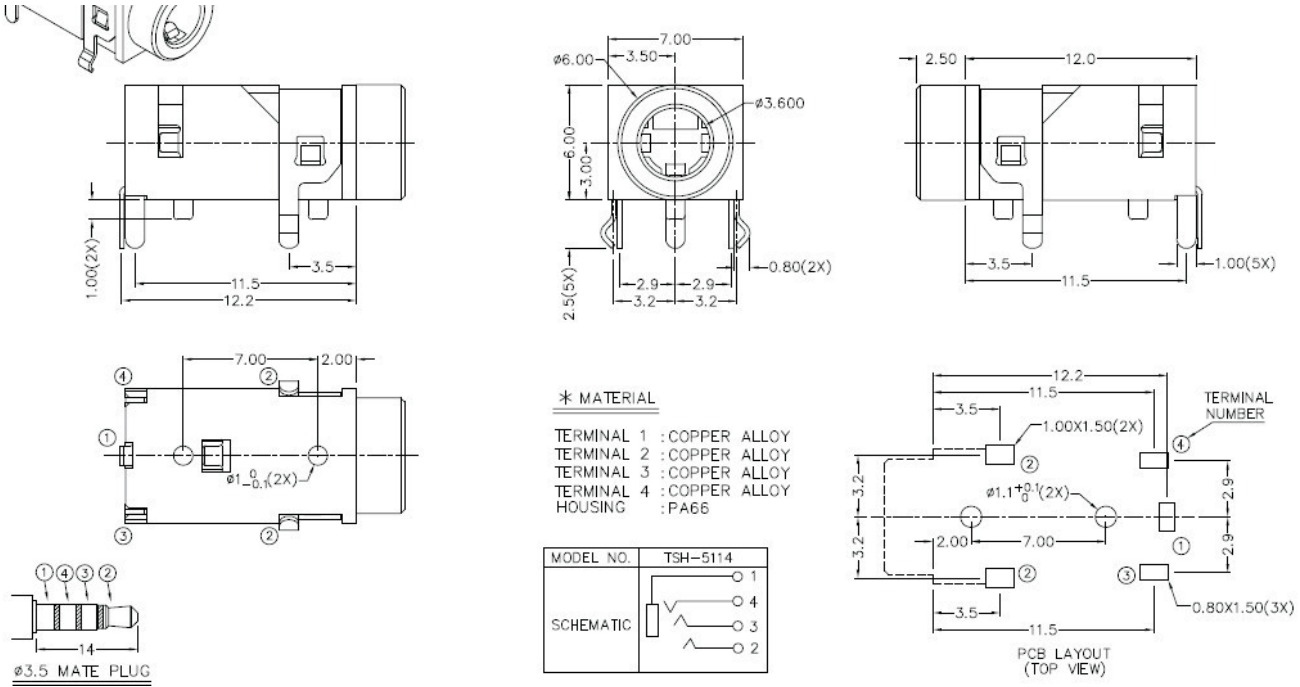

ORDER INFORMATION

Product No. : KLS1-SSJ-3.5-007A

Pos. NO.

Series NO.

3.5mm Mono Jack * Stereo Jack Series

KLS1-SSJ-3.5-008A (Dip Stereo Jack)

Housing Material / Center Pin Material	PA66 / Brass
Rated Load	DC 12V 1A Max
Contact resistance	⩽0.03Ω
Insulation resistance	⩾100MΩ
Withstand voltage	AC 500V(50Hz) 1min
Actuating Force	3~20N
Life	5000Time

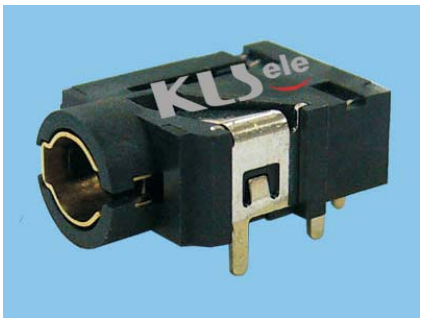

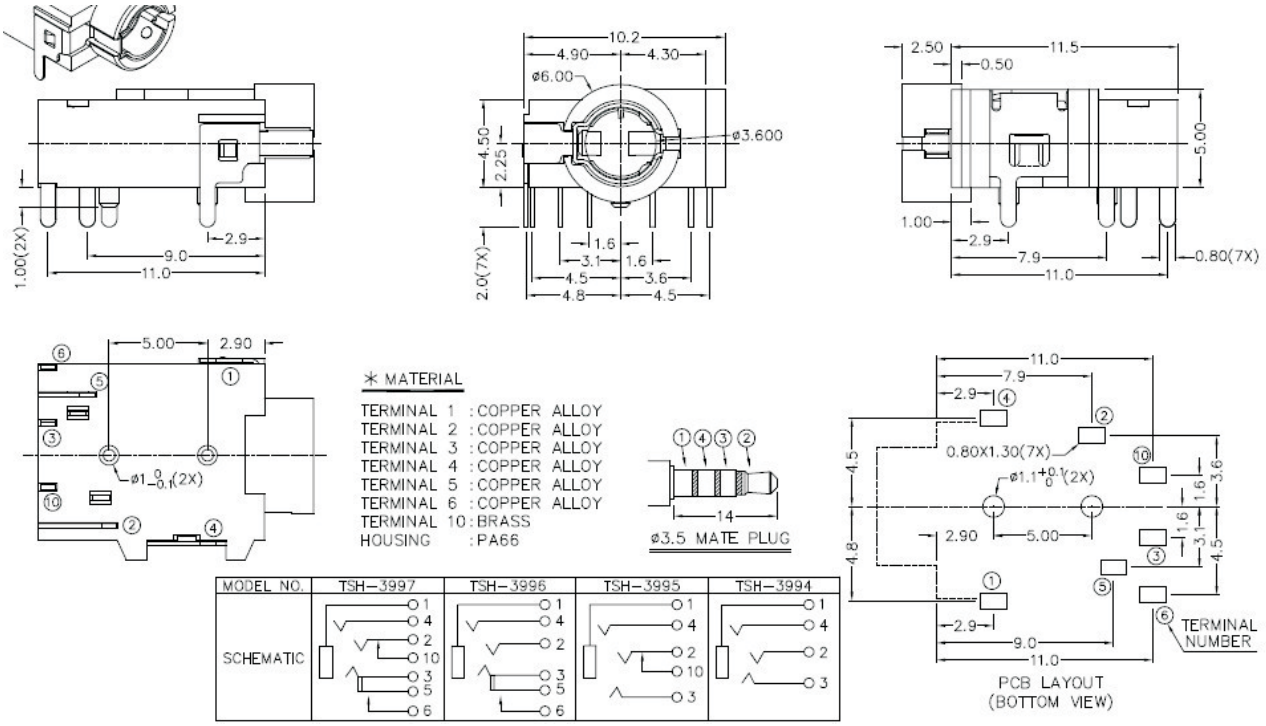

ORDER INFORMATION

Product No. : KLS1-SSJ-3.5-008A

Pos. NO.

Series NO.

3.5mm Mono Jack * Stereo Jack Series

KLS1-SSJ-3.5-009A (Dip Stereo Jack)

Housing Material / Center Pin Material	PA66 / Brass
Rated Load	DC 12V 1A Max
Contact resistance	⩽0.03Ω
Insulation resistance	⩾100MΩ
Withstand voltage	AC 500V(50Hz) 1min
Actuating Force	3~20N
Life	5000Time



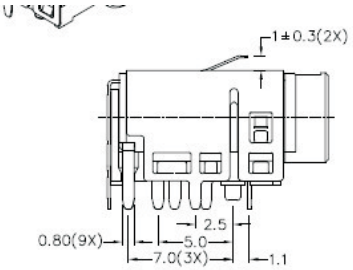

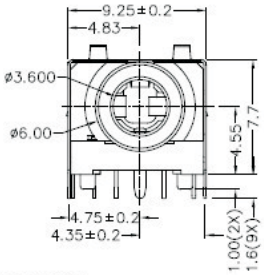

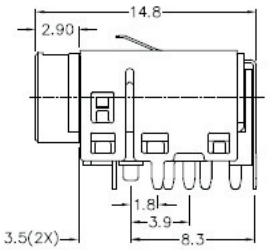

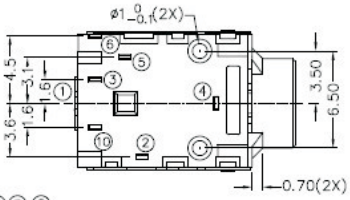

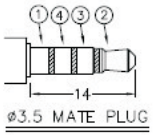

✳ MATERIAL

TERMINAL 1	:COPPER ALLOY
TERMINAL 2	:COPPER ALLOY
TERMINAL 3	:COPPER ALLOY
TERMINAL 4	:COPPER ALLOY
TERMINAL 5	:COPPER ALLOY
TERMINAL 6	:COPPER ALLOY
TERMINAL 10	:BRASS
SHIELD	:STAINLESS STEEL
HOUSING	:PA6T

MODEL NO.	TSH-5147S
SCHEMATIC	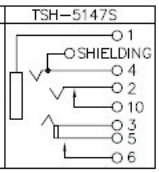

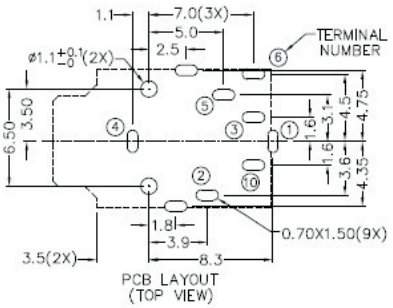

ORDER INFORMATION

Product No. : KLS1-SSJ-3.5-009A

Pos. NO.

Series NO.

3.5mm Mono Jack * Stereo Jack Series

KLS1-SSJ-3.5-010A (Dip Stereo Jack)

Housing Material / Center Pin Material	PA66 / Brass
Rated Load	DC 12V 1A Max
Contact resistance	⩽0.03Ω
Insulation resistance	⩾100MΩ
Withstand voltage	AC 500V(50Hz) 1min
Actuating Force	3~20N
Life	5000Time



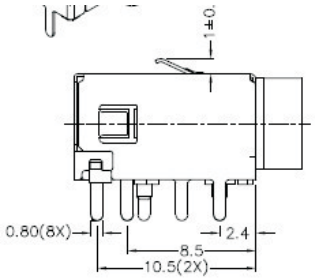

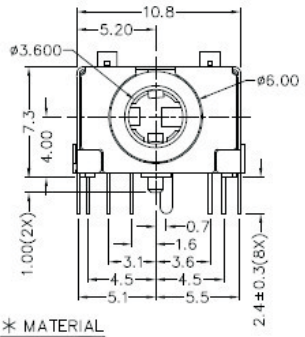

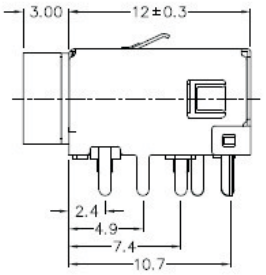

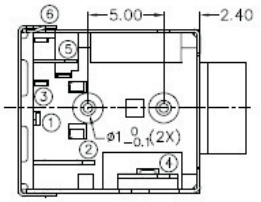

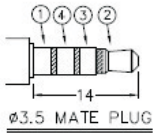

✳ MATERIAL

TERMINAL 1	COPPER ALLOY
TERMINAL 2	COPPER ALLOY
TERMINAL 3	COPPER ALLOY
TERMINAL 4	COPPER ALLOY
TERMINAL 5	COPPER ALLOY
TERMINAL 6	COPPER ALLOY
SHIELD	COPPER ALLOY
BUSHING	BRASS
HOUSING	PA66

MODEL NO.	TSH-5026S	TSH-5024S
SCHEMATIC	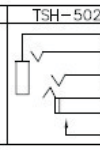	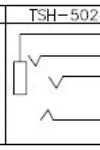

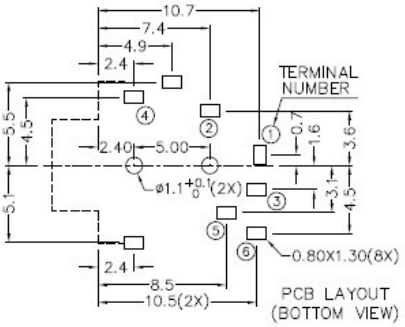

ORDER INFORMATION

Product No. : KLS1-SSJ-3.5-010A

Pos. NO.

Series NO.

3.5mm Mono Jack * Stereo Jack Series

KLS1-SJO-3.5-001A (Stereo Jack/OPTO)

Housing Material / Center Pin Material	PA9T / Brass
Rated Load	DC 12V 1A Max
Contact resistance	⩽0.03Ω
Insulation resistance	⩾100MΩ
Withstand voltage	AC 500V(50Hz) 1min
Actuating Force	3~20N
Life	5000Time

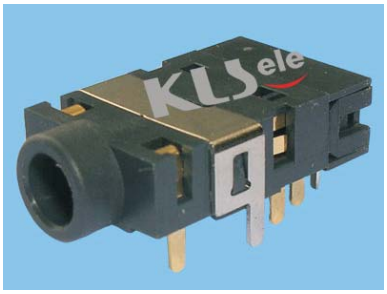

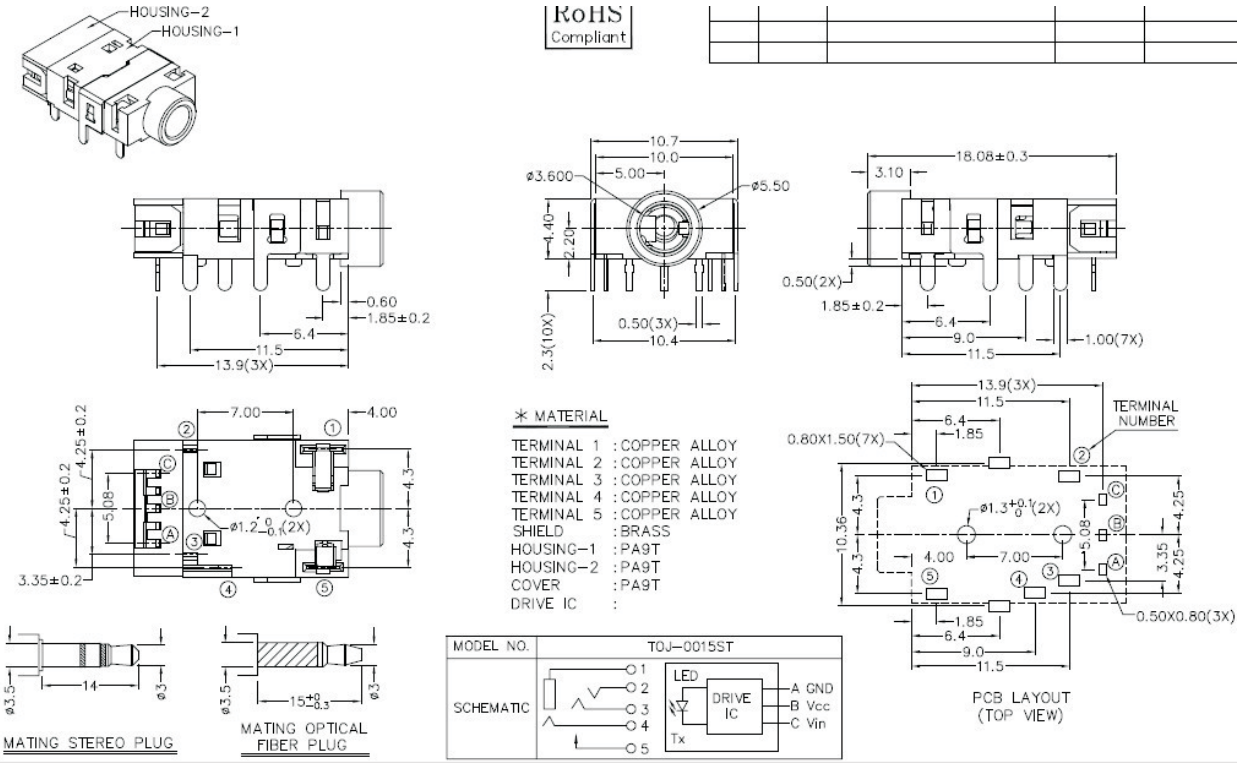

ORDER INFORMATION

Product No. : KLS1-SJO-3.5-001A

Pos. NO.

Series NO.

3.5mm Mono Jack * Stereo Jack Series

KLS1-SJO-3.5-002A (Stereo Jack/OPTO)

Housing Material / Center Pin Material	PA9T / Brass
Rated Load	DC 12V 1A Max
Contact resistance	⩽0.03Ω
Insulation resistance	⩾100MΩ
Withstand voltage	AC 500V(50Hz) 1min
Actuating Force	3~20N
Life	5000Time



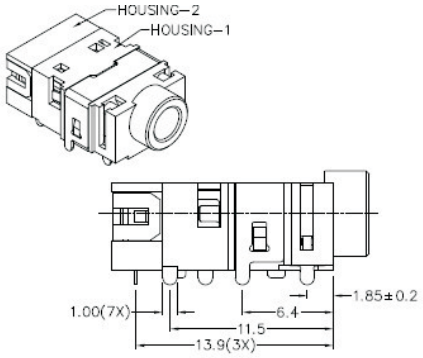

RoHS Compliant

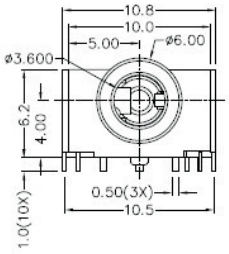

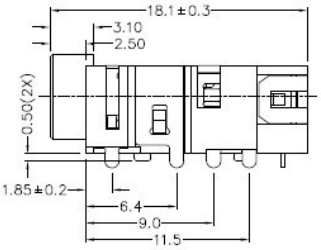

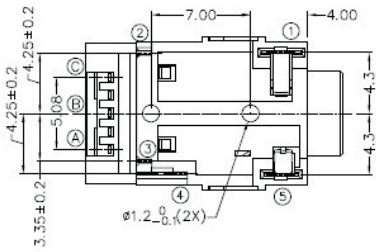

✳ MATERIAL

TERMINAL 1	:COPPER ALLOY
TERMINAL 2	:COPPER ALLOY
TERMINAL 3	:COPPER ALLOY
TERMINAL 4	:COPPER ALLOY
TERMINAL 5	:COPPER ALLOY
SHIELD	:BRASS
HOUSING-1	:PA9T
HOUSING-2	:PA9T
COVER	:PA9T
DRIVE IC	:

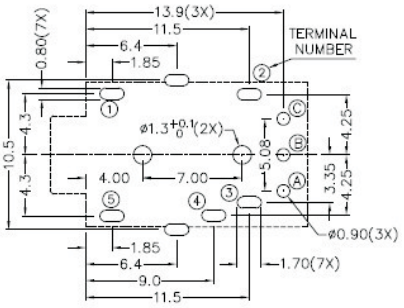

PCB LAYOUT
(TOP VIEW)

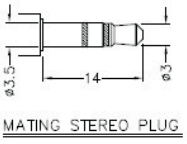

MATING STEREO PLUG

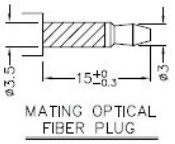

MATING OPTICAL FIBER PLUG

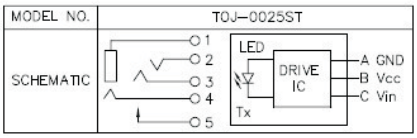

ORDER INFORMATION

Product No. : KLS1-SJO-3.5-002A

Pos. NO.

Series NO.

3.5mm Mono Jack * Stereo Jack Series

KLS1-SJO-3.5-003A (Stereo Jack/OPTO)

Housing Material / Center Pin Material	PA9T / Brass
Rated Load	DC 12V 1A Max
Contact resistance	⩽0.03Ω
Insulation resistance	⩾100MΩ
Withstand voltage	AC 500V(50Hz) 1min
Actuating Force	3~20N
Life	5000Time

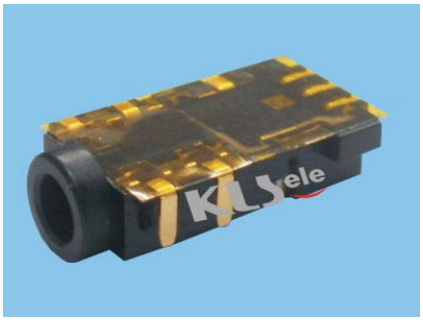

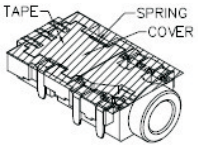

RoHS Compliant

ZONE	SYMBOL	REVISION	APPROVAL	DATE

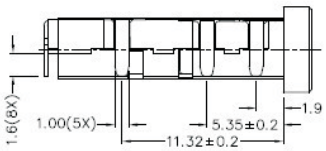

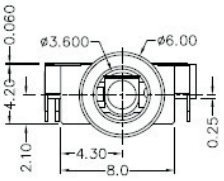

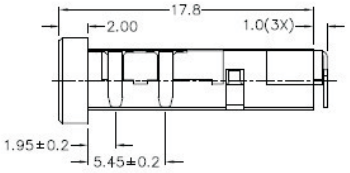

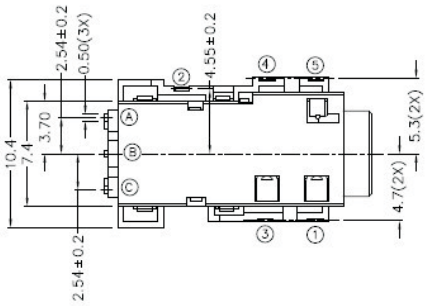

✳ MATERIAL

TERMINAL 1	:COPPER ALLOY
TERMINAL 2	:COPPER ALLOY
TERMINAL 3	:COPPER ALLOY
TERMINAL 4	:COPPER ALLOY
TERMINAL 5	:COPPER ALLOY
SPRING	:STAINLESS STEEL
HOUSING	:PA9T
COVER	:PA9T
TAPE	:POLYMIDE
DRIVE IC	:

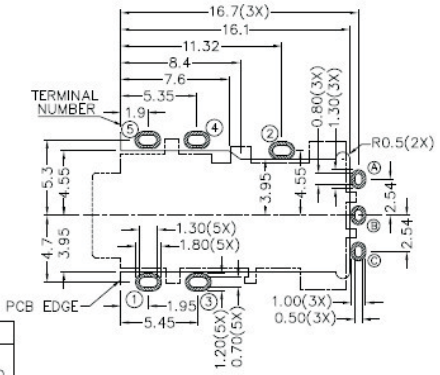

PCB LAYOUT
(TOP VIEW)

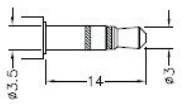

MATING STEREO PLUG

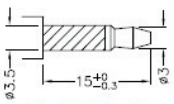

MATING OPTICAL FIBER PLUG

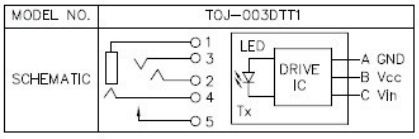

ORDER INFORMATION

Product No. : KLS1-SJO-3.5-003A

Pos. NO.

Series NO.

3.5mm Mono Jack * Stereo Jack Series

KLS1-TPJ-3.5-001A (SMD Stereo Jack)

Housing Material / Center Pin Material	PA6T / Brass
Rated Load	DC 12V 1A Max
Contact resistance	⩽0.03Ω
Insulation resistance	⩾100MΩ
Withstand voltage	AC 500V(50Hz) 1min
Actuating Force	3~20N
Life	5000Time



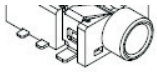

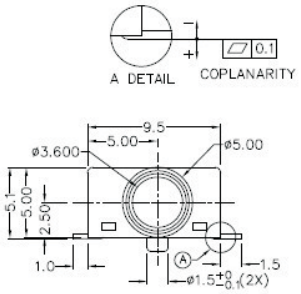

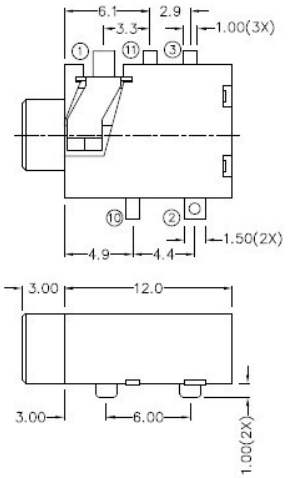

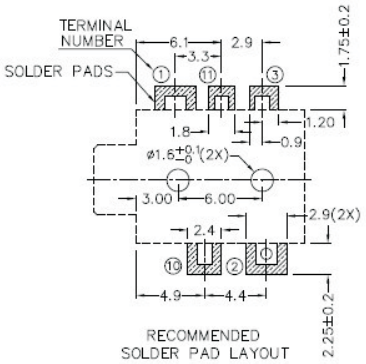

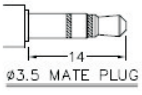

MODEL NO.	TSH-3675D	TSH-3674AD	TSH-3674BD	TSH-3673D	TSH-3673AD
SCHEMATIC	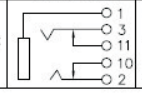	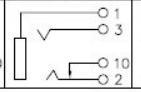	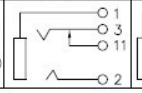	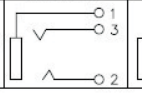	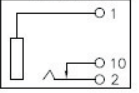

✳MATERIAL

TERMINAL 1	:COPPER ALLOY
TERMINAL 2	:COPPER ALLOY
TERMINAL 3	:COPPER ALLOY
TERMINAL 10	:BRASS
TERMINAL 11	:BRASS
HOUSING	:PA6T
COVER	:PA6T

ORDER INFORMATION

Product No. : KLS1-TPJ-3.5-001A

Pos. NO.

Series NO.

3.5mm Mono Jack * Stereo Jack Series

KLS1-TPJ-3.5-002A (SMD Stereo Jack)

Housing Material / Center Pin Material	PA6T / Brass
Rated Load	DC 12V 1A Max
Contact resistance	⩽0.03Ω
Insulation resistance	⩾100MΩ
Withstand voltage	AC 500V(50Hz) 1min
Actuating Force	3~20N
Life	5000Time



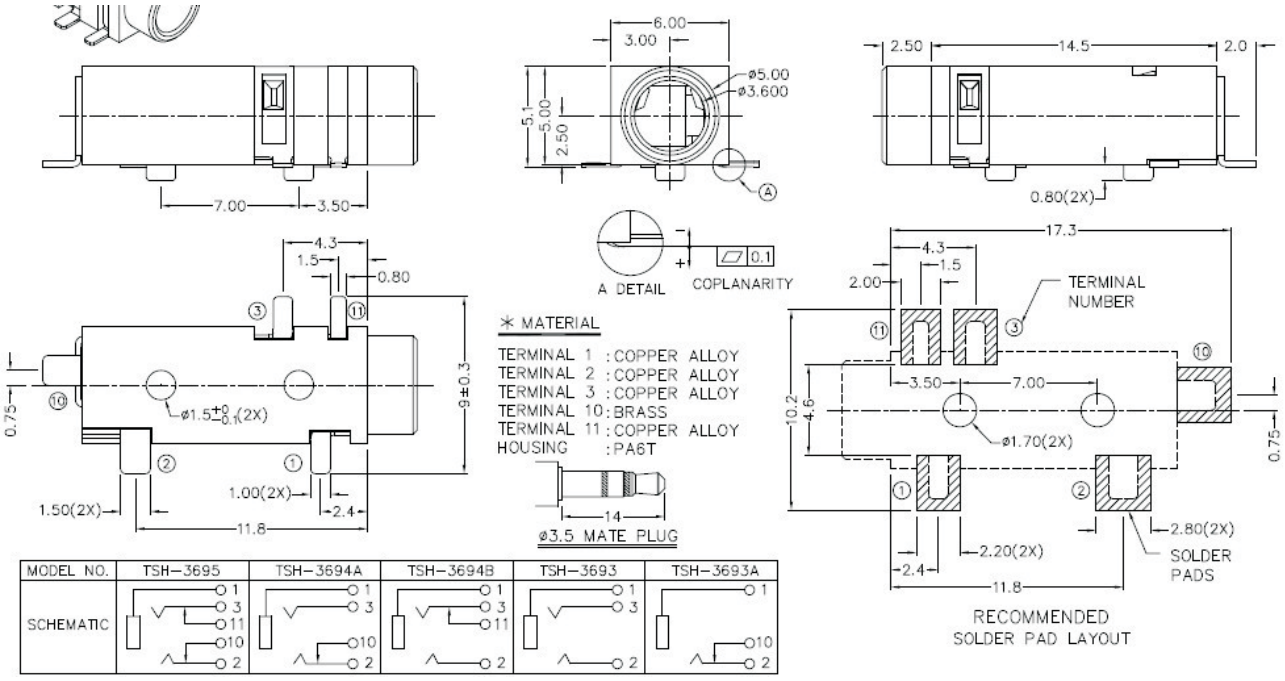

MODEL NO.	TSH-3695	TSH-3694A	TSH-3694B	TSH-3693	TSH-3693A
SCHEMATIC	1, 3, 11, 10, 2	1, 3, 10, 2	1, 3, 11, 2	1, 3, 2	1, 10, 2

ORDER INFORMATION

Product No. : KLS1-TPJ-3.5-002A

Pos. NO.

Series NO.

3.5mm Mono Jack * Stereo Jack Series

KLS1-TPJ-3.5-003A (SMD Stereo Jack)

Housing Material / Center Pin Material	PA6T / Brass
Rated Load	DC 12V 1A Max
Contact resistance	⩽0.03Ω
Insulation resistance	⩾100MΩ
Withstand voltage	AC 500V(50Hz) 1min
Actuating Force	3~20N
Life	5000Time

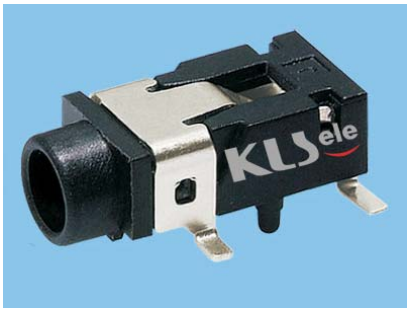

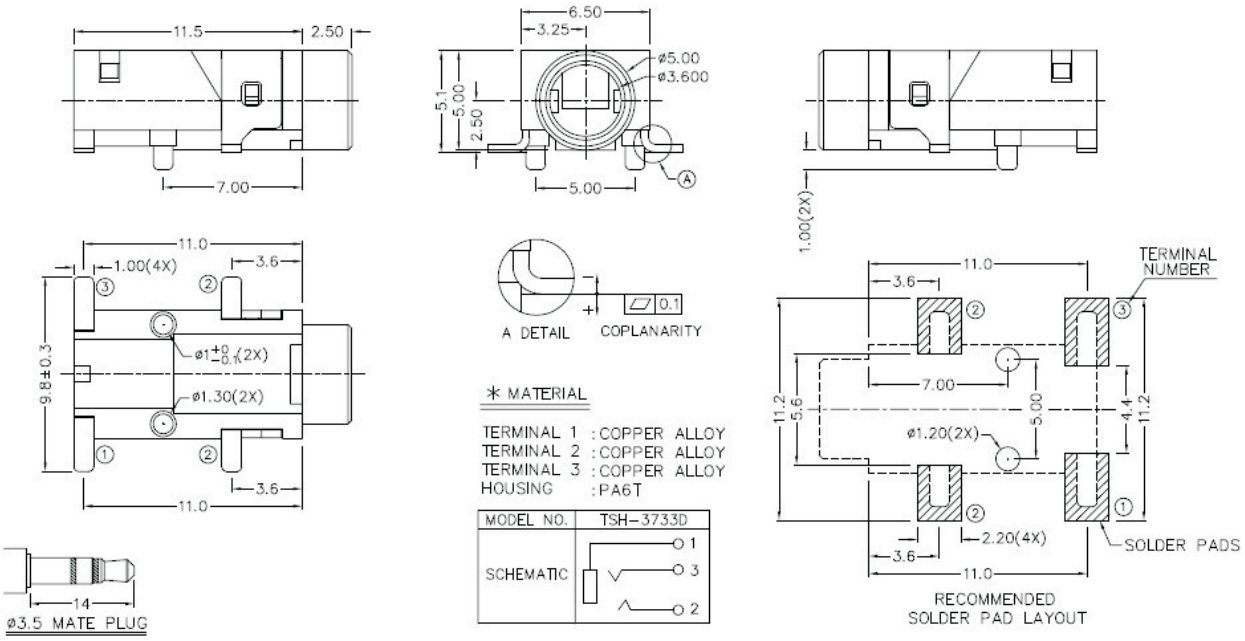

* MATERIAL

TERMINAL 1 : COPPER ALLOY
TERMINAL 2 : COPPER ALLOY
TERMINAL 3 : COPPER ALLOY
HOUSING : PA6T

MODEL NO.	TSH-3733D
SCHEMATIC	

ORDER INFORMATION

Product No. : KLS1-TPJ-3.5-003A

Pos. NO.

Series NO.

3.5mm Mono Jack * Stereo Jack Series

KLS1-TPJ-3.5-004A (SMD Stereo Jack)

Housing Material / Center Pin Material	PA6T / Brass
Rated Load	DC 12V 1A Max
Contact resistance	⩽0.03Ω
Insulation resistance	⩾100MΩ
Withstand voltage	AC 500V(50Hz) 1min
Actuating Force	3~20N
Life	5000Time



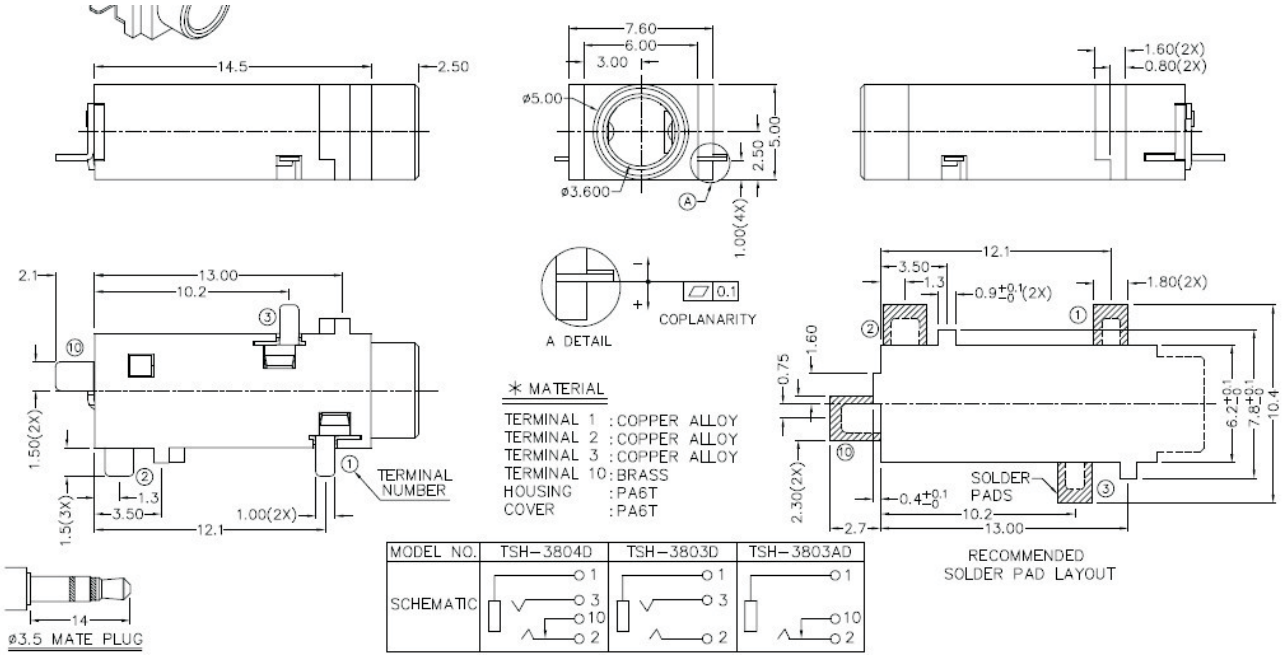

ORDER INFORMATION

Product No. : KLS1-TPJ-3.5-004A

Pos. NO.

Series NO.

3.5mm Mono Jack * Stereo Jack Series

KLS1-TPJ-3.5-005A (SMD Stereo Jack)

Housing Material / Center Pin Material	PA6T / Brass
Rated Load	DC 12V 1A Max
Contact resistance	⩽0.03Ω
Insulation resistance	⩾100MΩ
Withstand voltage	AC 500V(50Hz) 1min
Actuating Force	3~20N
Life	5000Time



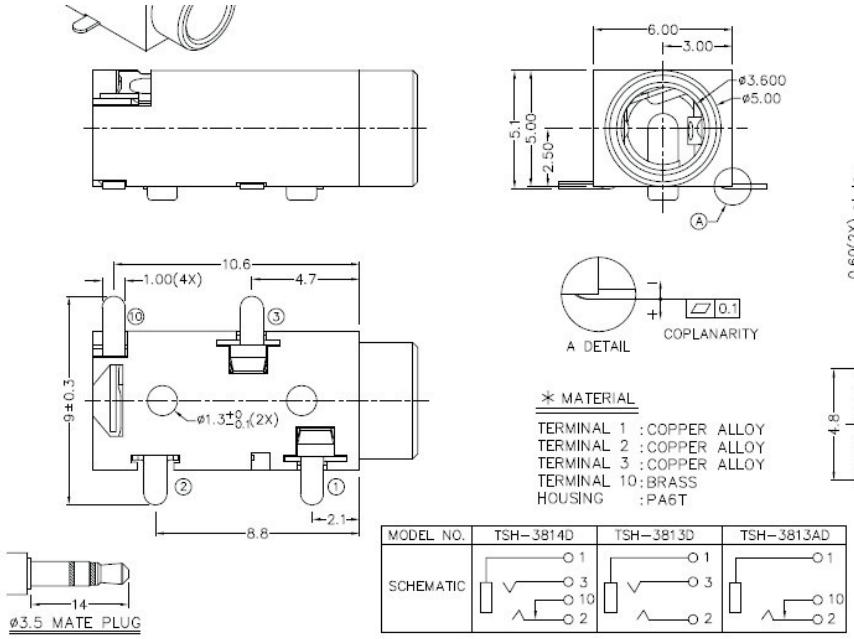

ORDER INFORMATION

Product No. : KLS1-TPJ-3.5-005A

Pos. NO.

Series NO.

3.5mm Mono Jack * Stereo Jack Series

KLS1-TPJ-3.5-006A (SMD Stereo Jack)

Housing Material / Center Pin Material	PA6T / Brass
Rated Load	DC 12V 1A Max
Contact resistance	⩽0.03Ω
Insulation resistance	⩾100MΩ
Withstand voltage	AC 500V(50Hz) 1min
Actuating Force	3~20N
Life	5000Time



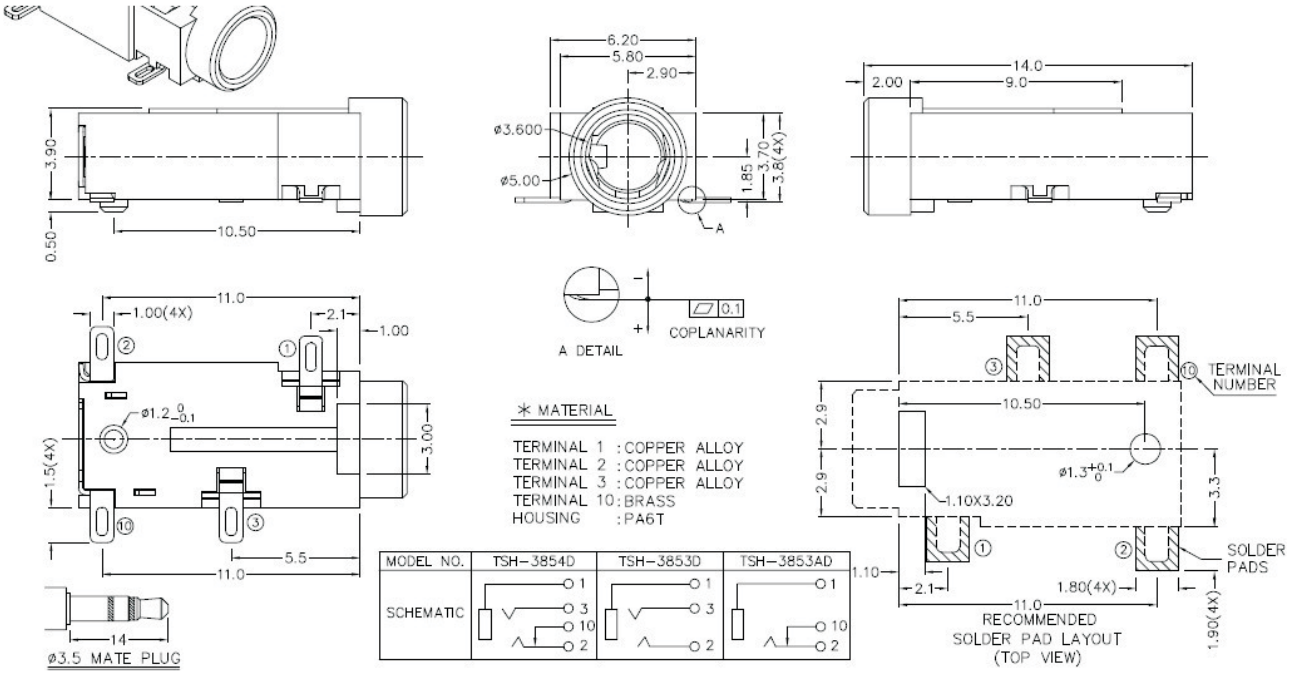

KLS1-TPJ-3.5-006B:



ORDER INFORMATION

Product No. : KLS1-TPJ-3.5-006A

Pos. NO.

Series NO.

3.5mm Mono Jack * Stereo Jack Series

KLS1-TPJ-3.5-007A (SMD Stereo Jack)

Housing Material / Center Pin Material	PA6T / Brass
Rated Load	DC 12V 1A Max
Contact resistance	⩽0.03Ω
Insulation resistance	⩾100MΩ
Withstand voltage	AC 500V(50Hz) 1min
Actuating Force	3~20N
Life	5000Time

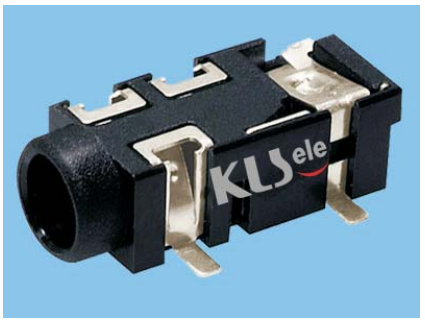

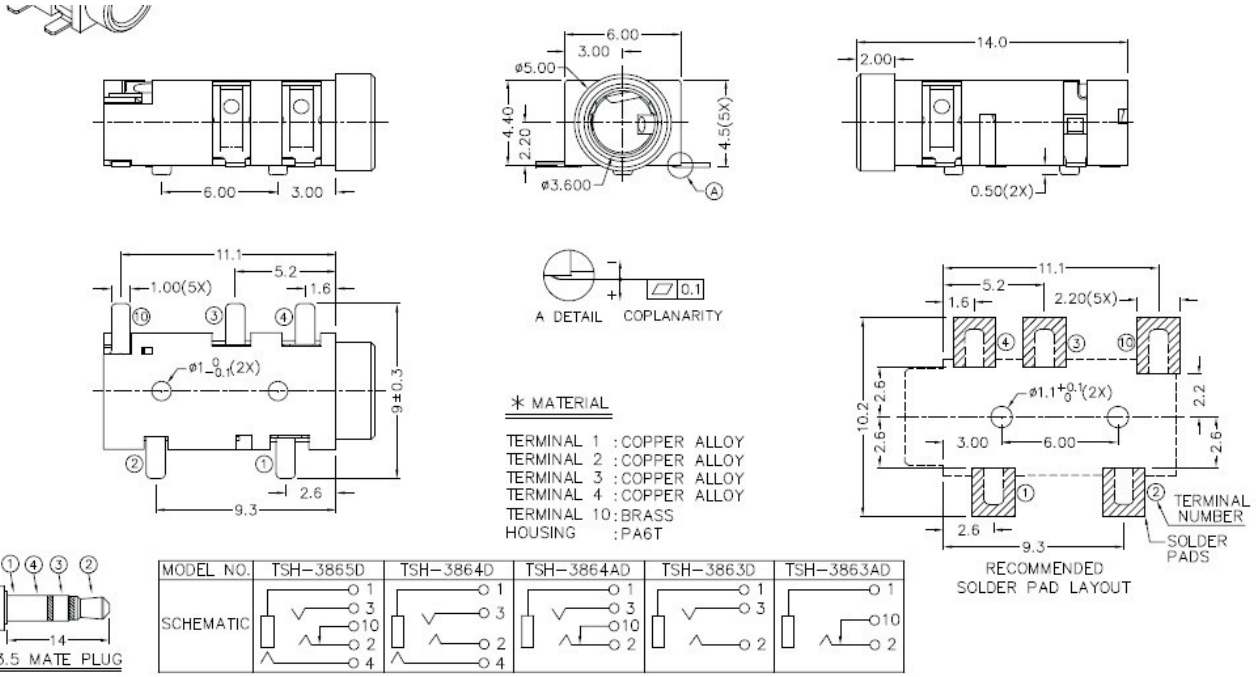

MODEL NO.	TSH-3865D	TSH-3864D	TSH-3864AD	TSH-3863D	TSH-3863AD
SCHEMATIC					

ORDER INFORMATION

Product No. : KLS1-TPJ-3.5-007A

Pos. NO.

Series NO.

3.5mm Mono Jack * Stereo Jack Series

KLS1-TPJ-3.5-008A (SMD Stereo Jack)

Housing Material / Center Pin Material	PA6T / Brass
Rated Load	DC 12V 1A Max
Contact resistance	⩽0.03Ω
Insulation resistance	⩾100MΩ
Withstand voltage	AC 500V(50Hz) 1min
Actuating Force	3~20N
Life	5000Time



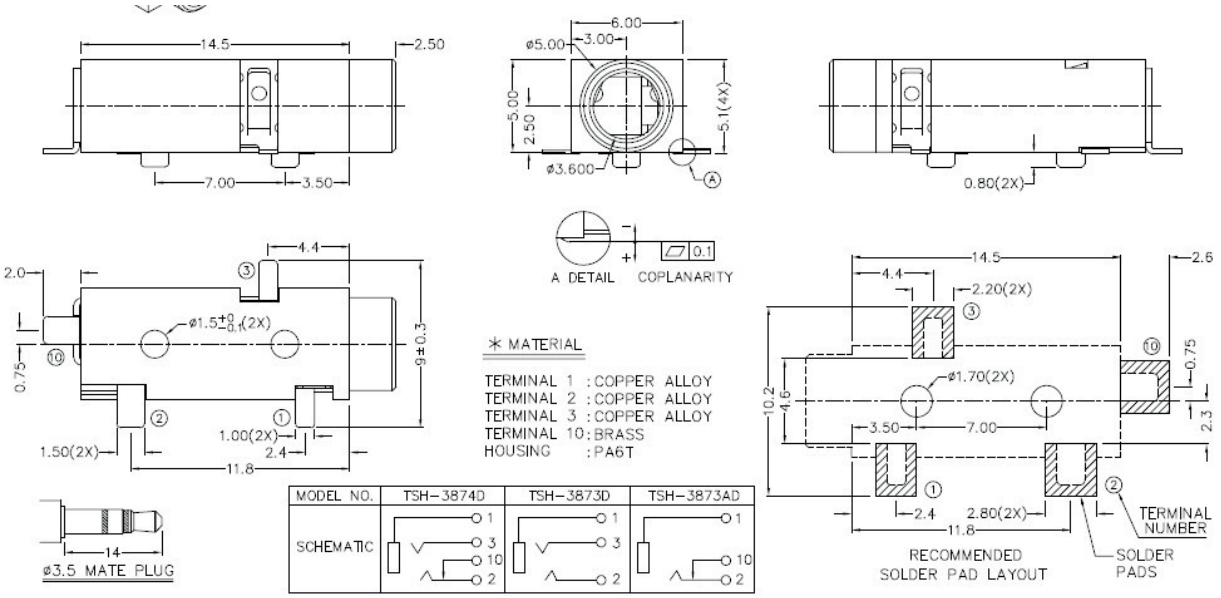

ORDER INFORMATION

Product No. : KLS1-TPJ-3.5-008A

Pos. NO.

Series NO.

3.5mm Mono Jack * Stereo Jack Series

KLS1-TPJ-3.5-009A (SMD Stereo Jack)

Housing Material / Center Pin Material	PA6T / Brass
Rated Load	DC 12V 1A Max
Contact resistance	⩽0.03Ω
Insulation resistance	⩾100MΩ
Withstand voltage	AC 500V(50Hz) 1min
Actuating Force	3~20N
Life	5000Time

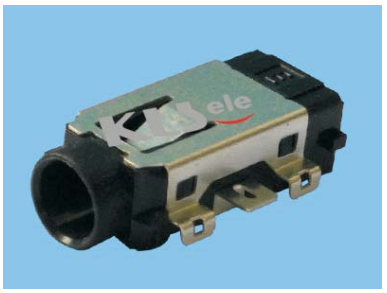

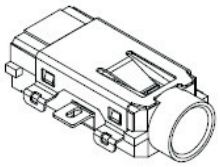

RoHS Compliant

		ADDED INDICATION OF COPLANARITY	J.X.KUANG	16-

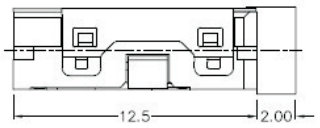

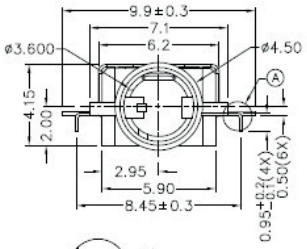

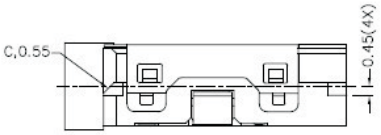

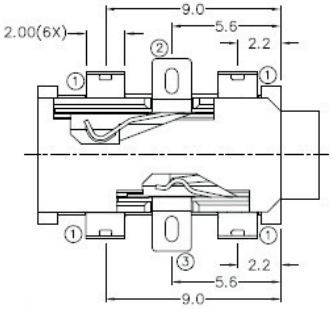

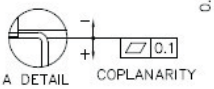

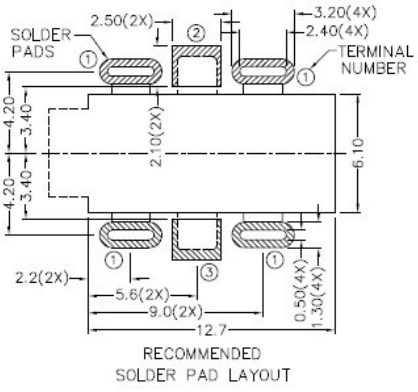

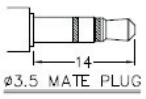

* MATERIAL

TERMINAL 1 : STAINLESS STEEL
TERMINAL 2 : COPPER ALLOY
TERMINAL 3 : COPPER ALLOY
HOUSING : PA6T

MODEL NO.	TSH-5033D
SCHEMATIC	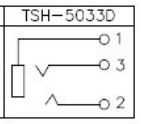

ORDER INFORMATION

Product No. : KLS1-TPJ-3.5-009A

Pos. NO.

Series NO.

3.5mm Mono Jack * Stereo Jack Series

KLS1-TPJ-3.5-010A (SMD Stereo Jack)

Housing Material / Center Pin Material	PA6T / Brass
Rated Load	DC 12V 1A Max
Contact resistance	⩽0.03Ω
Insulation resistance	⩾100MΩ
Withstand voltage	AC 500V(50Hz) 1min
Actuating Force	3~20N
Life	5000Time



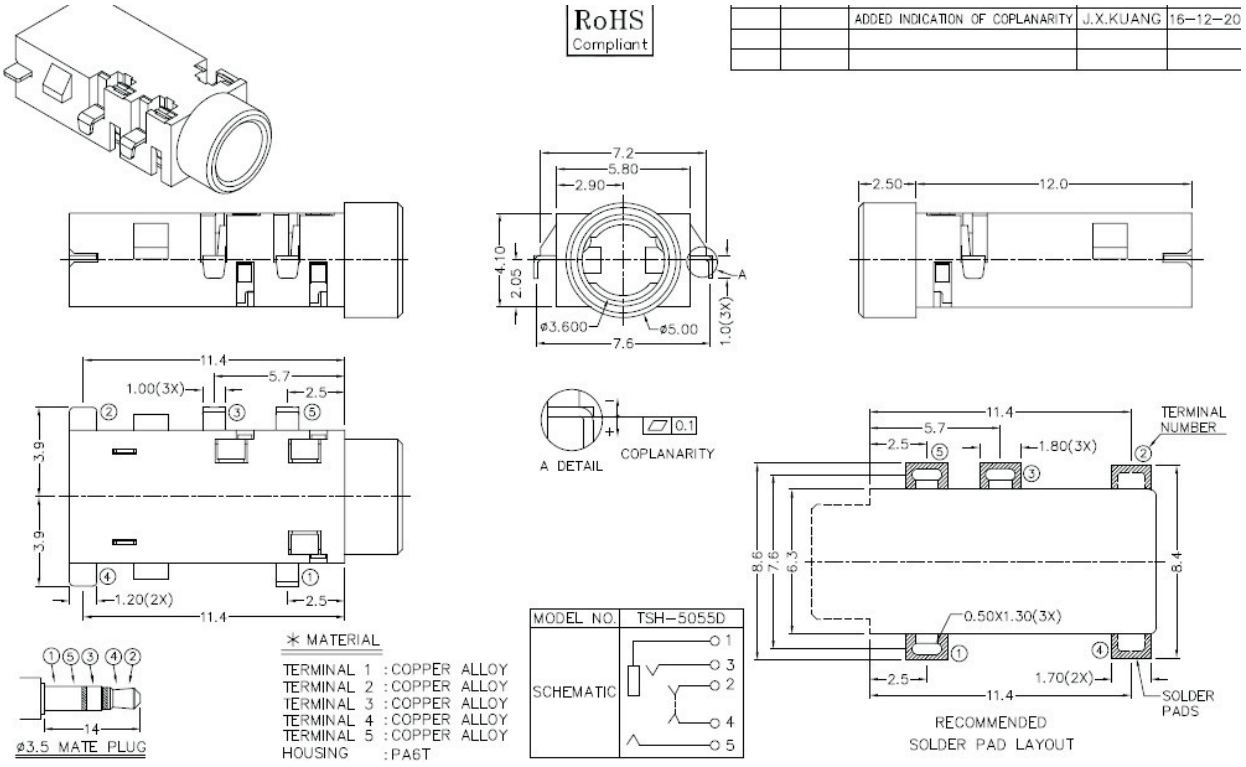

ORDER INFORMATION

Product No. : KLS1-TPJ-3.5-010A

Pos. NO.

Series NO.

I

3.5mm Mono Jack * Stereo Jack Series

KLS1-TPJ-3.5-011A (SMD Stereo Jack)

Housing Material / Center Pin Material	PA6T / Brass
Rated Load	DC 12V 1A Max
Contact resistance	⩽0.03Ω
Insulation resistance	⩾100MΩ
Withstand voltage	AC 500V(50Hz) 1min
Actuating Force	3~20N
Life	5000Time

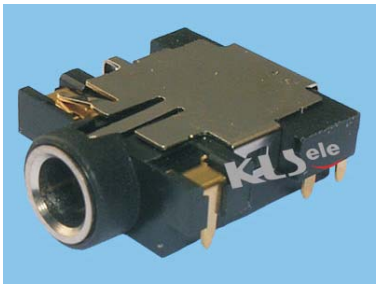

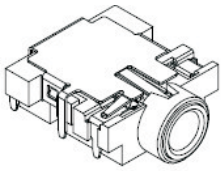

RoHS Compliant

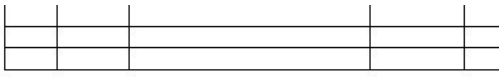

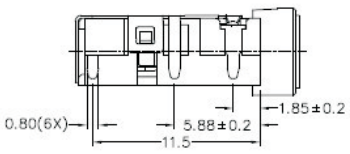

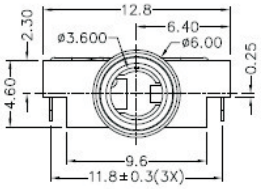

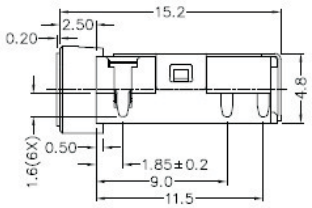

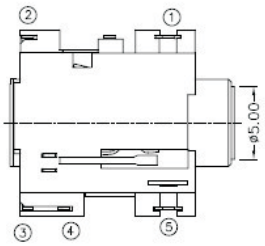

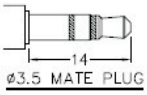

✳ MATERIAL

TERMINAL 1	:COPPER ALLOY
TERMINAL 2	:COPPER ALLOY
TERMINAL 3	:COPPER ALLOY
TERMINAL 4	:COPPER ALLOY
TERMINAL 5	:COPPER ALLOY
SHIELD	:COPPER ALLOY
BUSHING	:BRASS
HOUSING	:PA9T

MODEL NO.	TSH-5095DS
SCHEMATIC	SHIELDING, 1, 2, 3, 4, 5

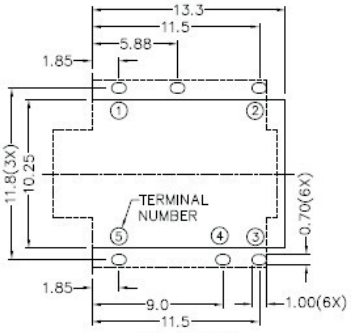

PCB LAYOUT
(TOP VIEW)

ORDER INFORMATION

Product No. : KLS1-TPJ-3.5-011A

Pos. NO.

Series NO.

3.5mm Mono Jack * Stereo Jack Series

KLS1-TPJ-3.5-012A (SMD Stereo Jack)

Housing Material / Center Pin Material	PA6T / Brass
Rated Load	DC 12V 1A Max
Contact resistance	⩽0.03Ω
Insulation resistance	⩾100MΩ
Withstand voltage	AC 500V(50Hz) 1min
Actuating Force	3~20N
Life	5000Time



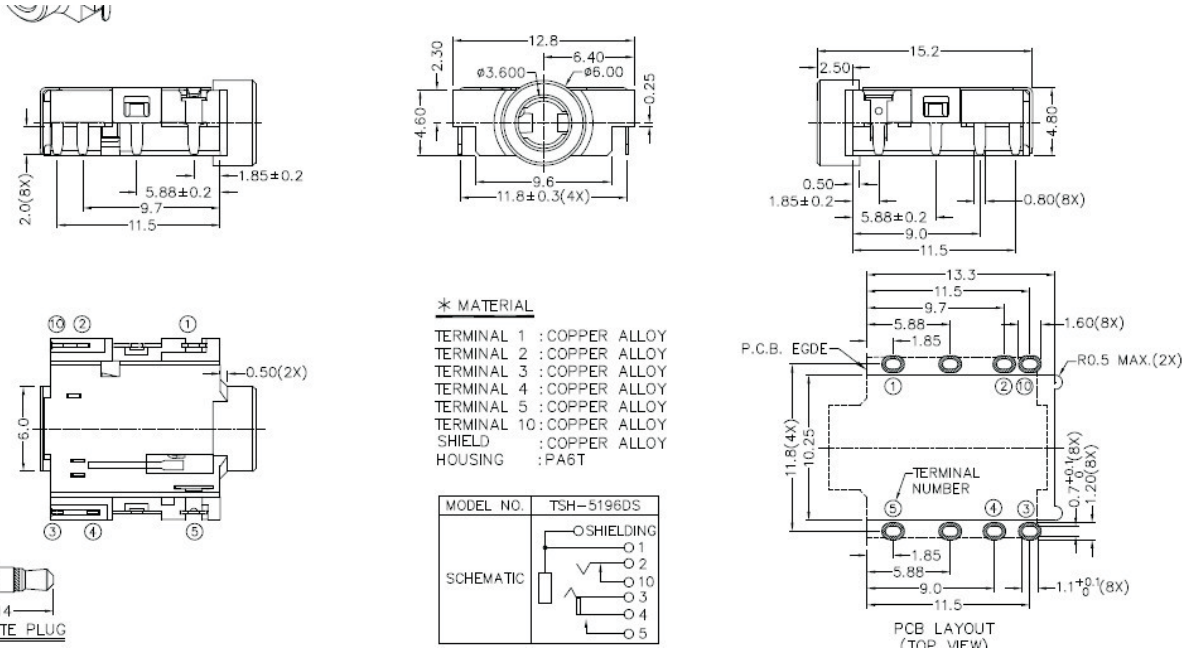

ORDER INFORMATION

Product No. : KLS1-TPJ-3.5-012A

Pos. NO.

Series NO.

3.5mm Mono Jack * Stereo Jack Series

KLS1-SPJ-3.5-001A (SMD Stereo Jack)

Housing Material / Center Pin Material	PA6T / Brass
Rated Load	DC 12V 1A Max
Contact resistance	⩽0.03Ω
Insulation resistance	⩾100MΩ
Withstand voltage	AC 500V(50Hz) 1min
Actuating Force	3~20N
Life	5000Time



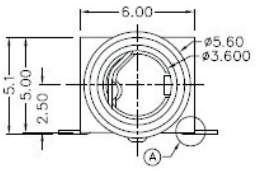

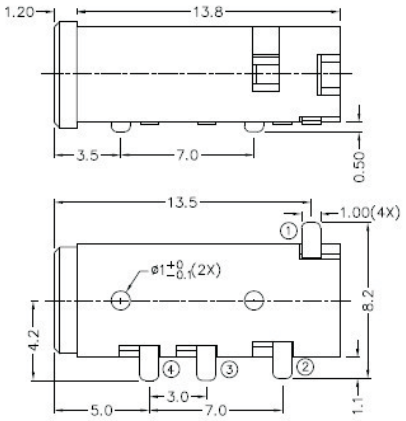

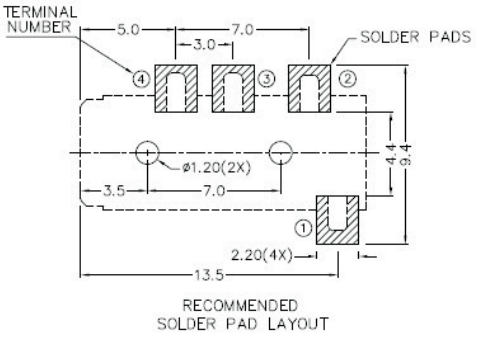

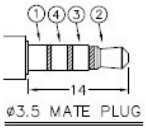

MODEL NO.	TSH-3714	TSH-3713	TSH-3713B
SCHEMATIC	1 4 3 2	1 3 2	4 3 2

✳ MATERIAL

TERMINAL 1 : COPPER ALLOY
TERMINAL 2 : COPPER ALLOY
TERMINAL 3 : COPPER ALLOY
TERMINAL 4 : COPPER ALLOY
HOUSING : PA6T

ORDER INFORMATION

Product No. : KLS1-SPJ-3.5-001A

Pos. NO.
Series NO.

3.5mm Mono Jack * Stereo Jack Series

KLS1-SPJ-3.5-002A (SMD Stereo Jack)

Housing Material / Center Pin Material	PA6T / Brass
Rated Load	DC 12V 1A Max
Contact resistance	⩽0.03Ω
Insulation resistance	⩾100MΩ
Withstand voltage	AC 500V(50Hz) 1min
Actuating Force	3~20N
Life	5000Time



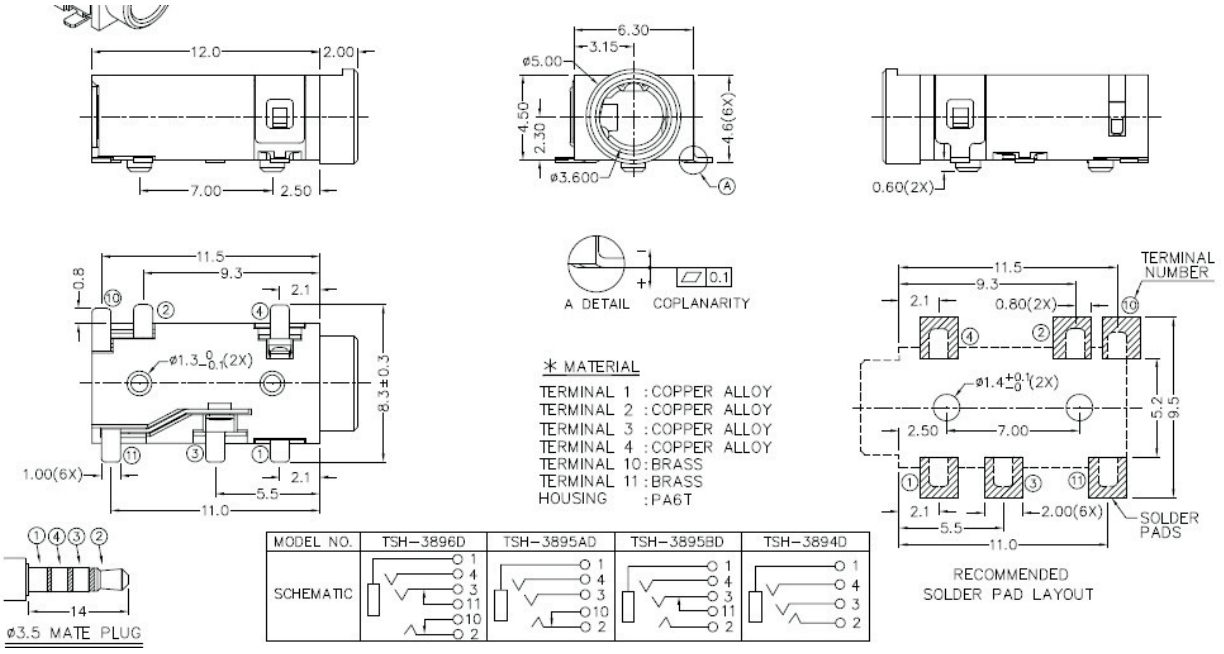

ORDER INFORMATION

Product No. : KLS1-SPJ-3.5-002A

Pos. NO.

Series NO.

3.5mm Mono Jack * Stereo Jack Series

KLS1-SPJ-3.5-003A (SMD Stereo Jack)

Housing Material / Center Pin Material	PA6T / Brass
Rated Load	DC 12V 1A Max
Contact resistance	⩽0.03Ω
Insulation resistance	⩾100MΩ
Withstand voltage	AC 500V(50Hz) 1min
Actuating Force	3~20N
Life	5000Time



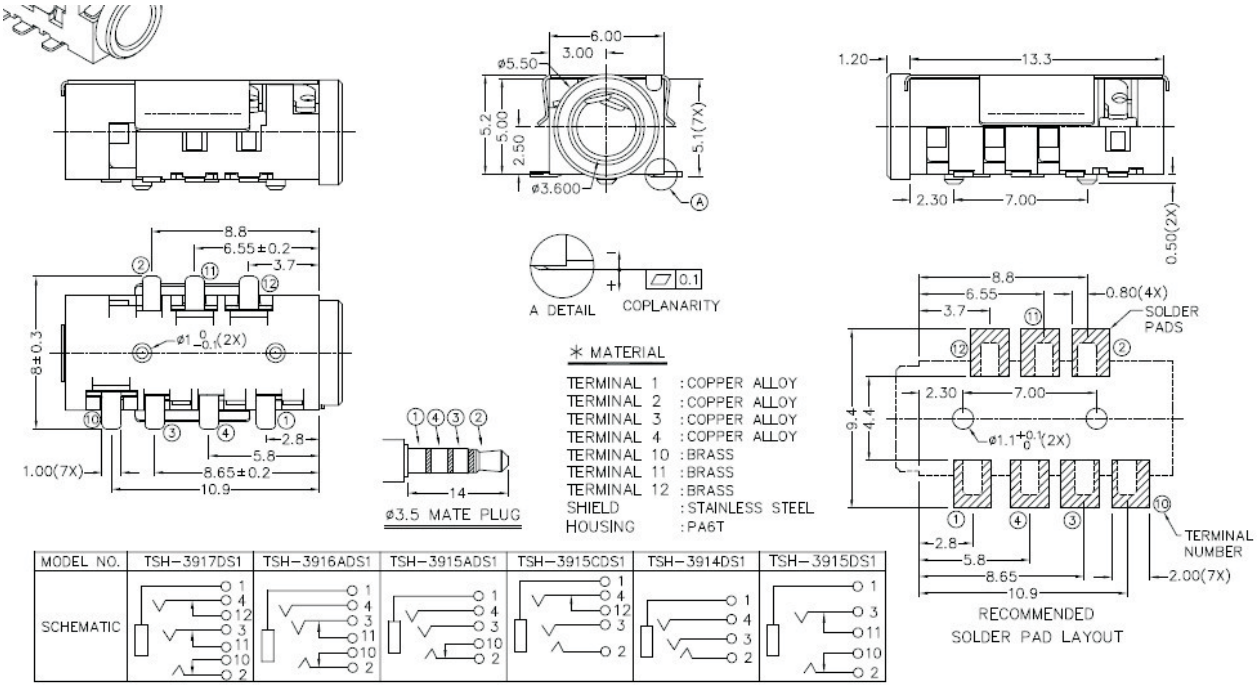

MODEL NO.	TSH-3917DS1	TSH-3916ADS1	TSH-3915ADS1	TSH-3915CDS1	TSH-3914DS1	TSH-3915DS1
SCHEMATIC						

ORDER INFORMATION

Product No. : KLS1-SPJ-3.5-003A

Pos. NO.

Series NO.

3.5mm Mono Jack * Stereo Jack Series

KLS1-SPJ-3.5-004A (SMD Stereo Jack)

Housing Material / Center Pin Material	PA6T / Brass
Rated Load	DC 12V 1A Max
Contact resistance	⩽0.03Ω
Insulation resistance	⩾100MΩ
Withstand voltage	AC 500V(50Hz) 1min
Actuating Force	3~20N
Life	5000Time



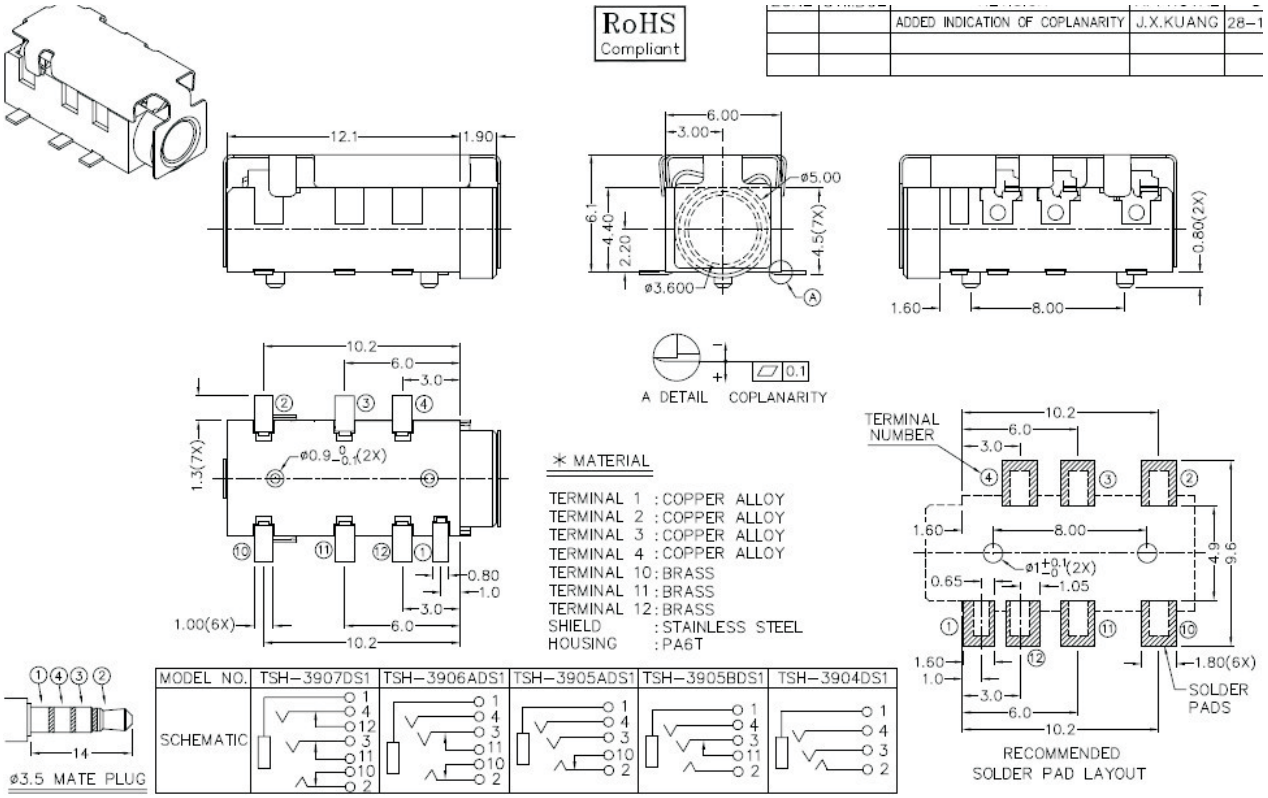

ORDER INFORMATION

Product No. : KLS1-SPJ-3.5-004A

Pos. NO.

Series NO.

3.5mm Mono Jack * Stereo Jack Series

KLS1-SPJ-3.5-005A (SMD Stereo Jack)

Housing Material / Center Pin Material	PA6T / Brass
Rated Load	DC 12V 1A Max
Contact resistance	⩽0.03Ω
Insulation resistance	⩾100MΩ
Withstand voltage	AC 500V(50Hz) 1min
Actuating Force	3~20N
Life	5000Time



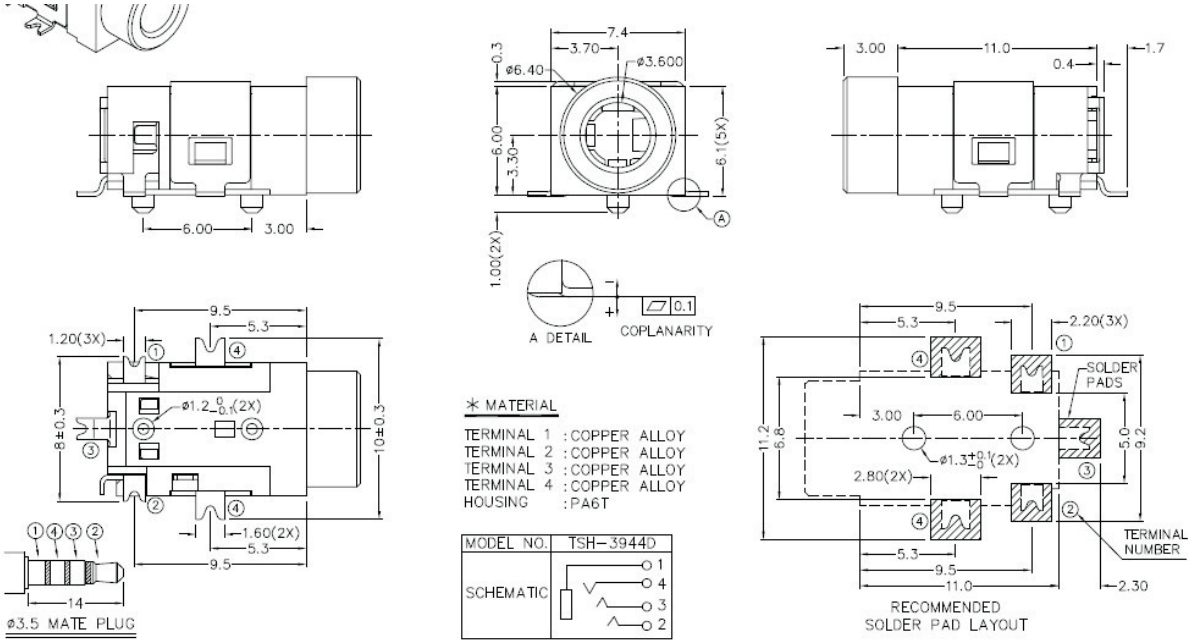

✳ MATERIAL

TERMINAL 1 : COPPER ALLOY
TERMINAL 2 : COPPER ALLOY
TERMINAL 3 : COPPER ALLOY
TERMINAL 4 : COPPER ALLOY
HOUSING : PA6T

MODEL NO.	TSH-3944D
SCHEMATIC	

KLS1-SPJ-3.5-005B:



ORDER INFORMATION

Product No. : KLS1-SPJ-3.5-005A

Pos. NO.

Series NO.

3.5mm Mono Jack * Stereo Jack Series

KLS1-SPJ-3.5-006A (SMD Stereo Jack)

Housing Material / Center Pin Material	PA6T / Brass
Rated Load	DC 12V 1A Max
Contact resistance	⩽0.03Ω
Insulation resistance	⩾100MΩ
Withstand voltage	AC 500V(50Hz) 1min
Actuating Force	3~20N
Life	5000Time



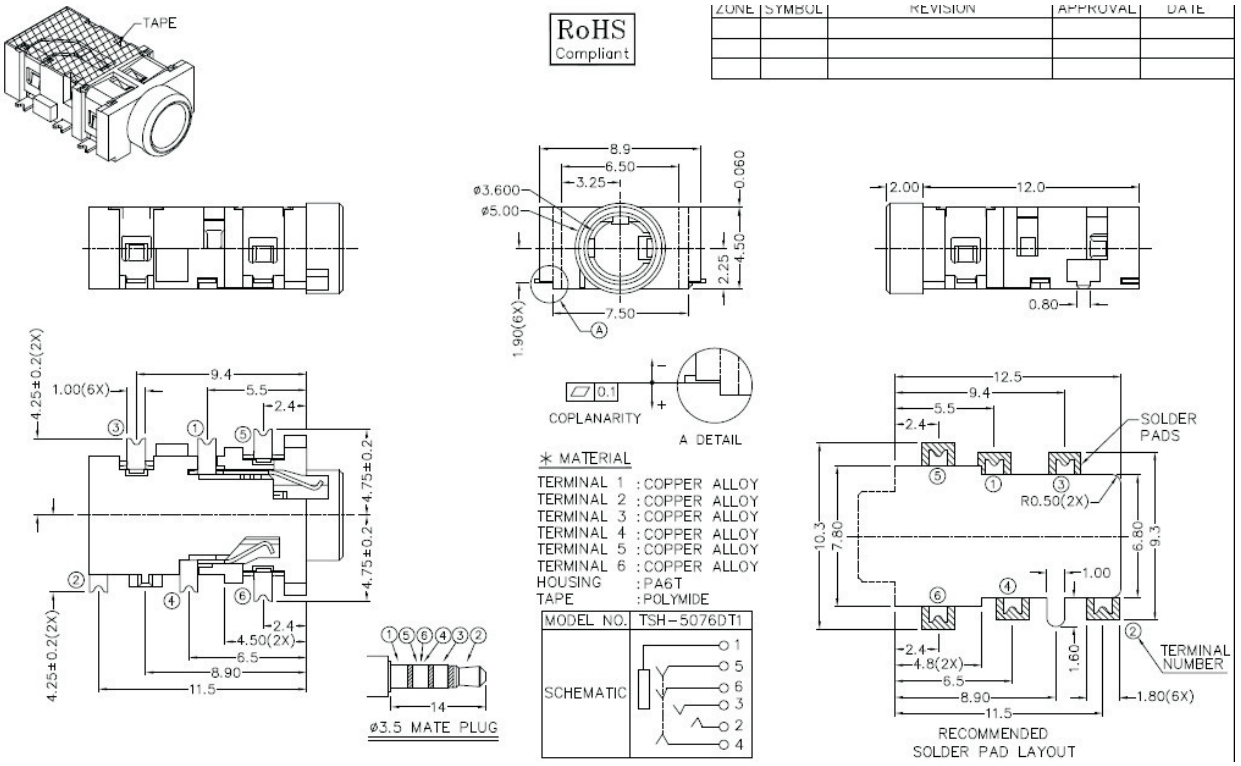

ORDER INFORMATION

Product No. : KLS1-SPJ-3.5-006A

Pos. NO.

Series NO.

3.5mm Mono Jack * Stereo Jack Series

KLS1-SPJ-3.5-007A (SMD Stereo Jack)

Housing Material / Center Pin Material	PA6T / Brass
Rated Load	DC 12V 1A Max
Contact resistance	⩽0.03Ω
Insulation resistance	⩾100MΩ
Withstand voltage	AC 500V(50Hz) 1min
Actuating Force	3~20N
Life	5000Time



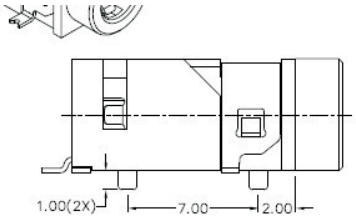

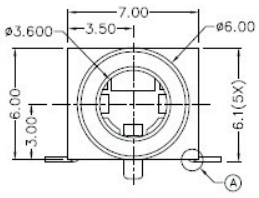

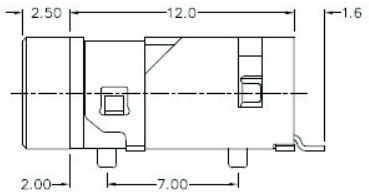

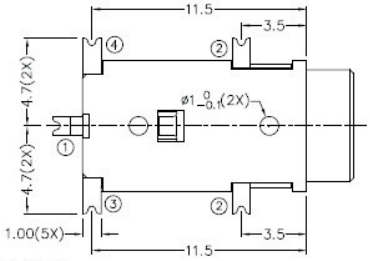

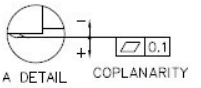

✳ MATERIAL

TERMINAL 1 : COPPER ALLOY
TERMINAL 2 : COPPER ALLOY
TERMINAL 3 : COPPER ALLOY
TERMINAL 4 : COPPER ALLOY
HOUSING : PA6T

MODEL NO.	TSH-5114D
SCHEMATIC	1, 4, 3, 2

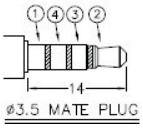

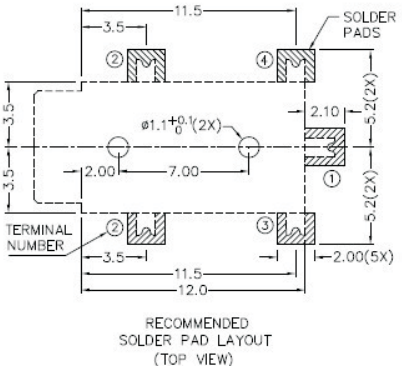

RECOMMENDED
SOLDER PAD LAYOUT
(TOP VIEW)

ORDER INFORMATION

Product No. : KLS1-SPJ-3.5-007A

Pos. NO.

Series NO.

3.5mm Mono Jack * Stereo Jack Series

KLS1-SPJ-3.5-008A (SMD Stereo Jack)

Housing Material / Center Pin Material	PA6T / Brass
Rated Load	DC 12V 1A Max
Contact resistance	⩽0.03Ω
Insulation resistance	⩾100MΩ
Withstand voltage	AC 500V(50Hz) 1min
Actuating Force	3~20N
Life	5000Time

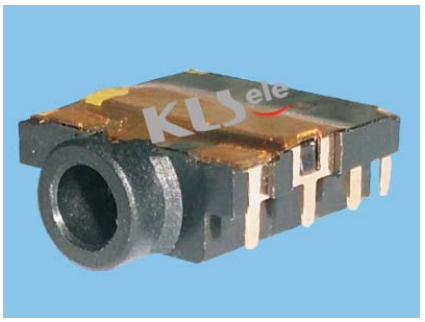

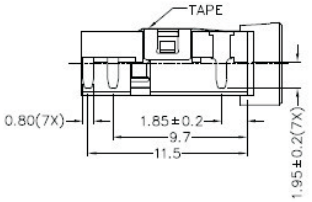

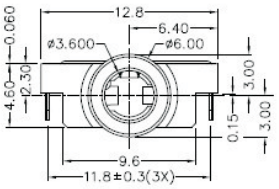

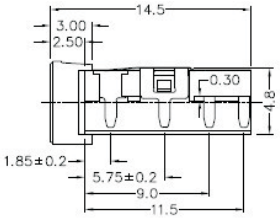

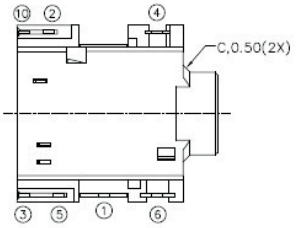

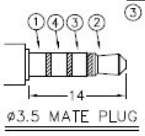

✳ MATERIAL

TERMINAL 1	COPPER ALLOY
TERMINAL 2	COPPER ALLOY
TERMINAL 3	COPPER ALLOY
TERMINAL 4	COPPER ALLOY
TERMINAL 5	COPPER ALLOY
TERMINAL 6	COPPER ALLOY
TERMINAL 10	COPPER ALLOY
HOUSING	PA6T
TAPE	POLYMIDE

MODEL NO.	TSH-5157DT1
SCHEMATIC	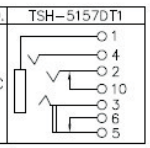

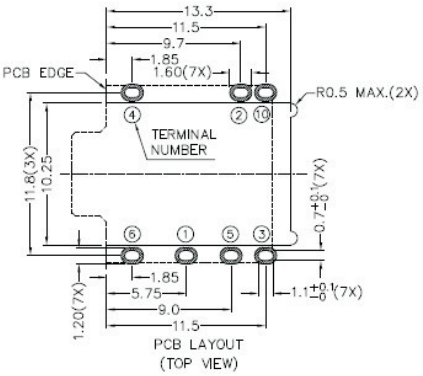

ORDER INFORMATION

Product No. : KLS1-SPJ-3.5-008A

Pos. NO.

Series NO.

3.5mm Mono Jack * Stereo Jack Series

KLS1-SPJ-3.5-009A (SMD Stereo Jack)

Housing Material / Center Pin Material	PA6T / Brass
Rated Load	DC 12V 1A Max
Contact resistance	⩽0.03Ω
Insulation resistance	⩾100MΩ
Withstand voltage	AC 500V(50Hz) 1min
Actuating Force	3~20N
Life	5000Time



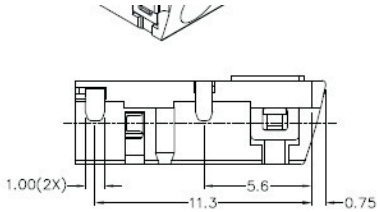

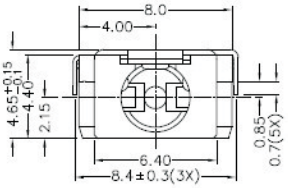

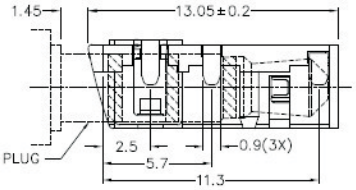

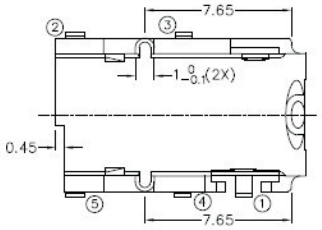

* MATERIAL

TERMINAL 1 : COPPER ALLOY
TERMINAL 2 : COPPER ALLOY
TERMINAL 3 : COPPER ALLOY
TERMINAL 4 : COPPER ALLOY
TERMINAL 5 : COPPER ALLOY
HOUSING : PA6T

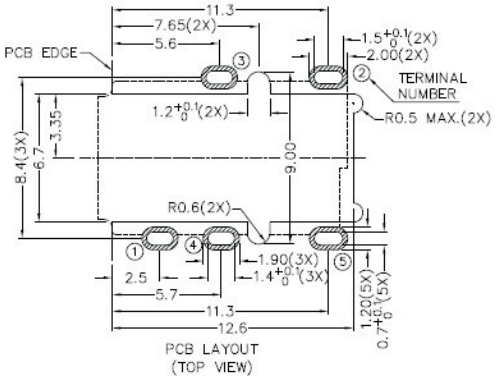

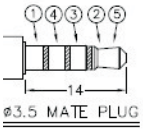

MODEL NO.	TSH-5315D
SCHEMATIC	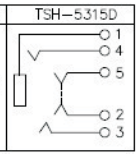

ORDER INFORMATION

Product No. : KLS1-SPJ-3.5-009A

Pos. NO.

Series NO.

RCA Plug / RCA Socket Series

KLS1-RCA-PF01 (RCA Socket)

Connector Type	Phono (RCA) Socket
Gender	Female
Signal Lines	Mono
Shielding	Unshielded
Color - Contact	Silver
Packaging	Bulk
Contact Material	Brass
Housing Color	Black,Blue,Red,Green,Yellow.....
Housing Material	Thermoplastic
Operating Temperature	-20°C ~ 85°C





ORDER INFORMATION

Product NO. : KLS1-RCA-PF01

Pos. NO.

Part NO.

KLS's Part No.	Description
KLS1-RCA-PF01-R	RCA Socket / Red color
KLS1-RCA-PF01-B	RCA Socket / Black color
KLS1-RCA-PF01-Y	RCA Socket / Yellow color
KLS1-RCA-PF01-G	RCA Socket / Green color

Remark: Optional Color Optional

RCA Plug / RCA Socket Series

KLS1-RCA-PF02(RCA Socket)

Connector Type	Phono (RCA) Socket
Gender	Female
Signal Lines	Mono
Shielding	Unshielded
Color - Contact	Silver
Packaging	Bulk
Contact Material	Brass
Housing Color	Black,Blue,Red,Green,Yellow .....
Housing Material	Thermoplastic
Operating Temperature	-20°C ~ 85°C



ORDER INFORMATION

Product NO. : KLS1-RCA-PF02

Pos. NO.

Part NO.

KLS's Part No.	Description
KLS1-RCA-PF02-R	RCA Socket / Red color
KLS1-RCA-PF02-B	RCA Socket / Black color
KLS1-RCA-PF02-Y	RCA Socket / Yellow color
KLS1-RCA-PF02-G	RCA Socket / Green color

Remark: Optional Color Optional

RCA Plug / RCA Socket Series

KLS1-RCA-PF03 (RCA Socket)

Connector Type	Phono (RCA) Socket
Gender	Female
Signal Lines	Mono
Shielding	Unshielded
Color - Contact	Silver
Packaging	Bulk
Contact Material	Brass
Housing Color	Black,Red.....
Housing Material	Thermoplastic
Operating Temperature	-20°C ~ 85°C



ORDER INFORMATION

Product NO. : KLS1-RCA-PF03

Pos. NO.

Part NO.

KLS's Part No.	Description
KLS1-RCA-PF03-N-R	RCA Socket / Nickel-plated / Red color
KLS1-RCA-PF03-N-B	RCA Socket / Nickel-plated / Black color
KLS1-RCA-PF03-N-Y	RCA Socket / Nickel-plated / Yellow color
KLS1-RCA-PF03-N-G	RCA Socket / Nickel-plated / Green color

Remark: Optional gold-plated nickel And Color Optional

RCA Plug / RCA Socket Series

KLS1-RCA-PF04 (RCA Socket)

Connector Type	Phono (RCA) Socket
Gender	Female
Signal Lines	Mono
Shielding	Unshielded
Color - Contact	Silver
Packaging	Bulk
Contact Material	Brass
Housing Color	Black,Red,Blue,Green.....
Housing Material	Thermoplastic
Operating Temperature	-20°C ~ 85°C



ORDER INFORMATION

Product NO. : KLS1-RCA-PF04

Pos. NO.

Part NO.

KLS's Part No.	Description
KLS1-RCA-PF04-R	RCA Socket / Red color
KLS1-RCA-PF04-B	RCA Socket / Black color
KLS1-RCA-PF04-L	RCA Socke / Blue color
KLS1-RCA-PF04-G	RCA Socket / Green color

Remark: Optional Color Optional

RCA Plug / RCA Socket Series

I

KLS1-RCA-PF05 (RCA Socket)

Connector Type	Phono (RCA) Socket
Gender	Female
Signal Lines	Mono
Shielding	Unshielded
Color - Contact	Silver
Packaging	Bulk
Contact Material	Brass
Housing Color	Black,Red,Green,Blue.....
Housing Material	Thermoplastic
Operating Temperature	-20°C ~ 85°C



ORDER INFORMATION

Product NO. : KLS1-RCA-PF05

Pos. NO.

Part NO.

KLS's Part No.	Description
KLS1-RCA-PF05-R	RCA Socket / Red color
KLS1-RCA-PF05-B	RCA Socket / Black color
KLS1-RCA-PF05-G	RCA Socket / Green color
KLS1-RCA-PF05-L	RCA Socket / Blue color

Remark: Optional Color Optional

RCA Plug / RCA Socket Series

KLS1-RCA-PF06 (RCA Socket)

Connector Type	Phono (RCA) Socket
Gender	Female
Signal Lines	Mono
Shielding	Unshielded
Color - Contact	Silver
Packaging	Bulk
Contact Material	Brass
Housing Color	Black,Red,Green,Blue.....
Housing Material	Thermoplastic
Operating Temperature	-20°C ~ 85°C



ORDER INFORMATION

Product NO. : KLS1-RCA-PF06

Pos. NO.

Part NO.

KLS's Part No.	Description
KLS1-RCA-PF06-R	RCA Socket / Red color
KLS1-RCA-PF06-B	RCA Socket / Black color
KLS1-RCA-PF06-G	RCA Socket / Green color
KLS1-RCA-PF06-L	RCA Socket / Blue color

Remark: Optional Color Optional

RCA Plug / RCA Socket Series

KLS1-RCA-PM01 (RCA Plug)

Gender	Male
Signal Lines	Mono
Plug/Mating Plug Diameter	3.20mm ID, 9.00mm OD (RCA)
Number of Positions/Contacts	2 Conductors, 2 Contacts
Internal Switch(s)	Does Not Contain Switch
Mounting Type	Free Hanging (In-Line)
Termination	Solder Eyelet(s)
Shielding	Unshielded
Features	Strain Relief
Color - Contact	Silver
Packaging	Bulk
Contact Material	Brass
Plating	Nickel
Housing Color	Black,Blue,Red,Green,Yellow.....
Housing Material	Thermoplastic
Operating Temperature	-20°C ~ 85°C





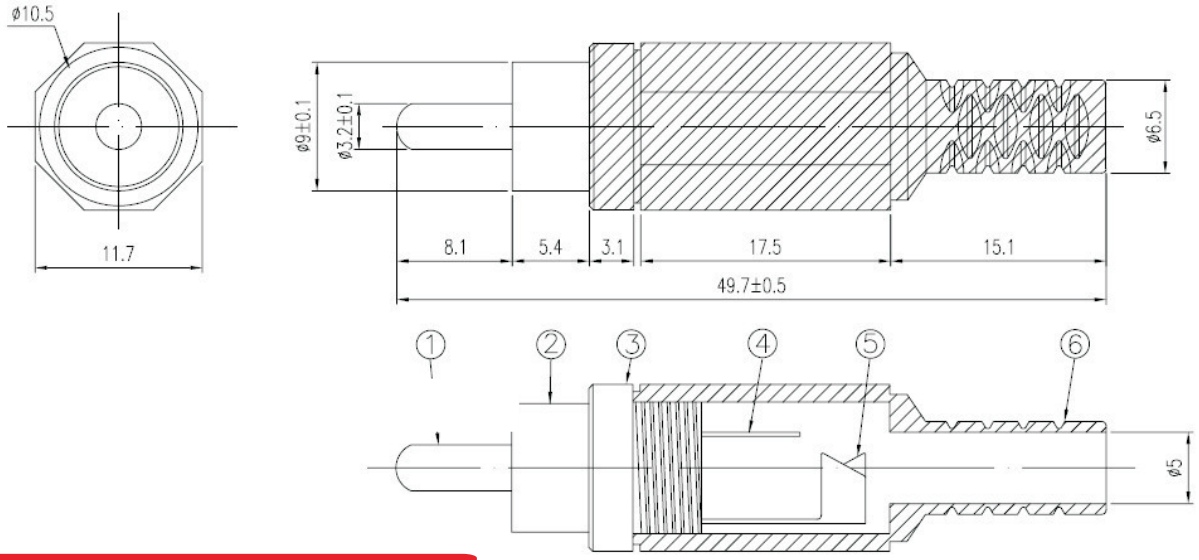

ORDER INFORMATION

Product NO. : KLS1-RCA-PM01

Pos. NO.

Part NO.

KLS's Part No.	Description
KLS1-RCA-PM01-R	RCA Plug / Red color
KLS1-RCA-PM01-B	RCA Plug / Black color
KLS1-RCA-PM01-Y	RCA Plug / Yellow color
KLS1-RCA-PM01-G	RCA Plug / Green color

Remark: Optional Color Optional

RCA Plug / RCA Socket Series

KLS1-RCA-PM02 (RCA Plug)

Connector Type	Phono (RCA) Plug
Gender	Male
Signal Lines	Mono
Plug/Mating Plug Diameter	3.20mm ID, 9.00mm OD (RCA)
Number of Positions/Contacts	2 Conductors, 2 Contacts
Internal Switch(s)	Does Not Contain Switch
Mounting Type	Free Hanging (In-Line)
Termination	Solder Eyelet(s)
Shielding	Unshielded
Size	Ø12x29mm
Color - Contact	Silver
Packaging	Bulk
Contact Material	Brass
Contact Material - Plating	Nickel
Housing Color	Black,Blue,Red,Green,Yellow.....
Housing Material	Thermoplastic
Operating Temperature	-20°C ~ 85°C





ORDER INFORMATION

Product NO. : KLS1-RCA-PM02

Pos. NO.

Part NO.

KLS's Part No.	Description
KLS1-RCA-PM02-R	RCA Plug / Red color
KLS1-RCA-PM02-B	RCA Plug / Black color
KLS1-RCA-PM02-Y	RCA Plug / Yellow color
KLS1-RCA-PM02-G	RCA Plug / Green color

Remark: Optional Color Optional

RCA Plug / RCA Socket Series

KLS1-RCA-PM03 (RCA Plug)

Phono (RCA) Plug	Mono,Phono (RCA) Plug
Plug/Mating Plug Diameter	3.20mm ID
Number of Positions/Contacts	2 Conductors, 2 Contacts
Internal Switch(s)	Does Not Contain Switch
Mounting Type	Free Hanging (In-Line)
Termination	Solder
Shielding	Unshielded
Cable O.D	5.8mm,6.0mm,6.5mm
Plating	Nickel,Gold
Packaging	Bulk
Contact Material	Brass
Operating Temperature	-40°C ~ 85°C
Color	Black,Red.....



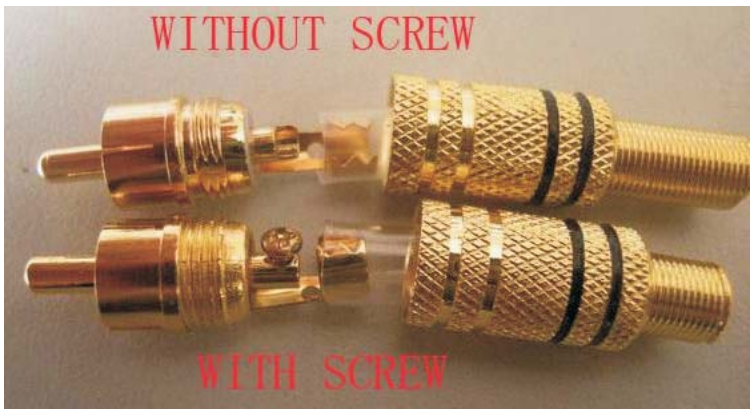

ORDER INFORMATION

Product NO. : KLS1-RCA-PM03

Pos. NO.

Part NO.

KLS's Part No.	Description
KLS1-RCA-PM03-N-R-*W-5.8*	RCA Plug / Nickel-plated / Red color / With Screw
KLS1-RCA-PM03-N-B-*W-5.8*	RCA Plug / Nickel-plated / Black color / With Screw
KLS1-RCA-PM03-G-R-*T-6.5*	RCA Plug / Gold-plated / Red color / Without Screw
KLS1-RCA-PM03-G-B-*T-6.5*	RCA Plug / Gold-plated / Black color / Without Screw

Remark: Optional gold-plated nickel And Screw Optional and Cable O.D Optional

RCA Plug / RCA Socket Series

KLS1-RCA-PM04 (RCA Plug)



Connector Type	Mono,Phono (RCA) Plug
Plug/Mating Plug Diameter	3.20mm ID
Number of Positions/Contacts	2 Conductors, 2 Contacts
Internal Switch(s)	Does Not Contain Switch
Mounting Type	Free Hanging (In-Line)
Termination	Solder
Color	Black,Red,Blue,Green.....
Color - Contact	Gold
Packaging	Bulk
Contact Material	Brass
Contact Material - Plating	Gold



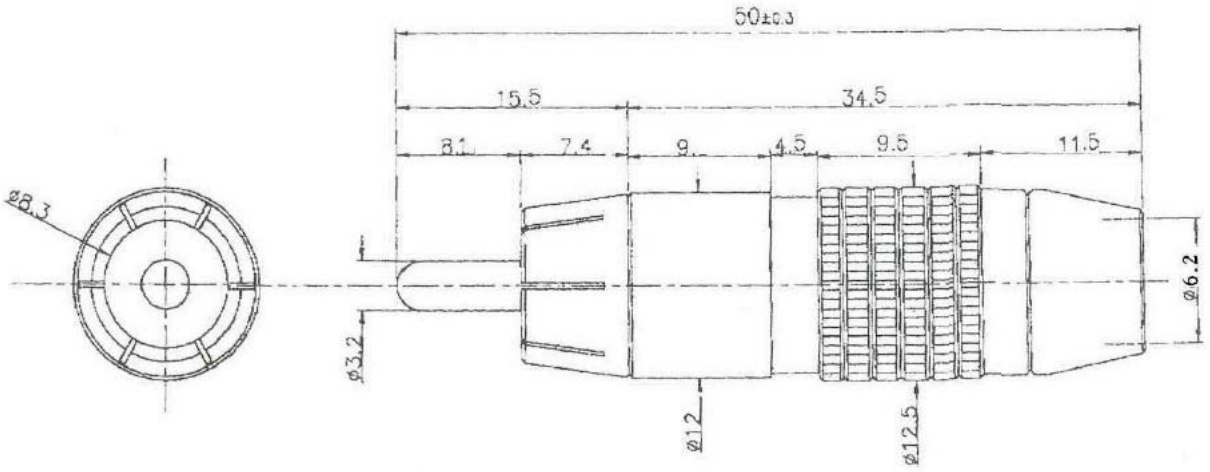

ORDER INFORMATION

Product NO. : KLS1-RCA-PM04

Pos. NO.

Part NO.

KLS's Part No.	Description
KLS1-RCA-PM04-R	RCA Plug / Red color
KLS1-RCA-PM04-B	RCA Plug / Black color
KLS1-RCA-PM04-L	RCA Plug / Blue color
KLS1-RCA-PM04-G	RCA Plug / Green color

Remark: Optional Color Optional

RCA Plug / RCA Socket Series

KLS1-RCA-PM05 (RCA Plug)

Connector Type	Phono (RCA) Plug
Plug/Mating Plug Diameter	3.20mm ID
Number of Positions/Contacts	2 Conductors, 2 Contacts
Signal Lines	Mono
Mounting Type	Free Hanging (In-Line)
Termination	Solder
Color	Black,Red,Green,Blue....
Color - Contact	Gold
Packaging	Bulk
Contact Material	Brass
Contact Material - Plating	Gold



ORDER INFORMATION

Product NO. : KLS1-RCA-PM05

Pos. NO.

Part NO.

KLS's Part No.	Description
KLS1-RCA-PM05-R	RCA Plug / Red color
KLS1-RCA-PM05-B	RCA Plug / Black color
KLS1-RCA-PM05-R	RCA Plug / Red color
KLS1-RCA-PM05-B	RCA Plug / Black color

Remark: Optional Color Optional

RCA Plug / RCA Socket Series

KLS1-RCA-PM06 (RCA Plug)

Connector Type	Mono,Phono (RCA) Plug
Plug/Mating Plug Diameter	3.20mm ID
Number of Positions/Contacts	2 Conductors, 2 Contacts
Internal Switch(s)	Does Not Contain Switch
Mounting Type	Free Hanging (In-Line)
Termination	Solder
Color	Black,Red,Green,Blue.....
Color - Contact	Gold
Packaging	Bulk
Contact Material	Brass
Contact Material - Plating	Gold



ORDER INFORMATION

Product NO. : KLS1-RCA-PM06

Pos. NO.

Part NO.

KLS's Part No.	Description
KLS1-RCA-PM06-R	RCA Plug / Red color
KLS1-RCA-PM06-B	RCA Plug / Black color
KLS1-RCA-PM06-G	RCA Plug / Green color
KLS1-RCA-PM06-L	RCA Plug / Blue color

Remark: Optional Color Optional

RCA Plug / RCA Socket Series

KLS1-RCA-PM07 (RCASocket)

Specifications:

. Specified for cable diameters up to: 9.0mm and 10.5mm.
. Dimensions: 13mm ± 0.2mm diameter x 50mm ± 1.00mm overall length



Connector Type	Mono,Phono (RCA) Plug
Plug/Mating Plug Diameter	3.20mm ID
Internal Sw itch(s)	Does Not Contain Sw itch
Mounting Type	Free Hanging (In-Line)
Termination	Solder
Color	Black,Red,Green,Blue.....
Color - Contact	Gold
Packaging	Bulk
Contact Material	Brass
Contact Material - Plating	Gold



ORDER INFORMATION

Product NO: KLS1-RCA-PM07

Pos. NO.
Part NO.

KLS's Part No.	Description
KLS1-RCA-PM07-R-9.0	RCA Plug / Red color
KLS1-RCA-PM07-B-9.0	RCA Plug / Black color
KLS1-RCA-PM07-G-10.5	RCA Plug / Green color
KLS1-RCA-PM07-L-10.5	RCA Plug / Blue color

Remark: Optional Color Optional

RCA Plug / RCA Socket Series

I

KLS1-RCA-PM08 (RCA Plug)

Summary:
. High Performance Audio RCA Connectors
(Eutectic cast brass central pin/Locking Collet type)

Specifications 1:
. Specified for cable diameters up to 6.5mm,7.5mm,8.5mm
. Dimensions: 11.5mm ± 0.1 diameter x 45mm ± 1.00mm overall length

Specifications 2:
. Specified for cable diameters up to 15mm
. Dimensions: 17mm ± 0.2mm diameter x 67mm ± 1.00mm overall length

Connector Type	Mono,Phono (RCA) Plug
Plug/Mating Plug Diameter	3.20mm ID
Internal Switch(s)	Does Not Contain Switch
Mounting Type	Free Hanging (In-Line)
Termination	Solder
Color	Black,Red,Green,Blue.....
Color - Contact	Gold
Packaging	Bulk
Contact Material	Brass
Contact Material - Plating	Gold



ORDER INFORMATION

Product NO. : KLS1-RCA-PM08

Pos. NO.

Part NO.

KLS's Part No.	Description
KLS1-RCA-PM08-R-6.5	RCA Plug / Red color / With Screw
KLS1-RCA-PM08-B-7.5	RCA Plug / Black color / With Screw
KLS1-RCA-PM08-G-8.5	RCA Plug / Green color / With Screw
KLS1-RCA-PM08-L-15	RCA Plug / Blue color / With Screw

Remark: Optional Color Optional and Cable O.D Optional

RCA Plug / RCA Socket Series

KLS1-RCA-PM09 (RCA Plug)

Connector Type	Mono,Phono (RCA) Plug
Plug/Mating Plug Diameter	3.20mm ID
Number of Positions/Contacts	2 Conductors, 2 Contacts
Internal Switch(s)	Does Not Contain Switch
Mounting Type	Free Hanging (In-Line)
Termination	Solder
Color	Black,Red,Blue,Green,White.....
Color - Contact	Gold
Packaging	Bulk
Contact Material	Brass
Contact Material - Plating	Gold









ORDER INFORMATION

Product NO. : KLS1-RCA-PM09

Pos. NO.

Part NO.

KLS's Part No.	Description
KLS1-RCA-PM09-R	RCA Plug / Red color
KLS1-RCA-PM09-B	RCA Plug / Black color
KLS1-RCA-PM09-G	RCA Plug / Green color
KLS1-RCA-PM09-L	RCA Plug / Blue color

Remark: Optional Color Optional

RCA Plug / RCA Socket Series

KLS1-RCA-PM10 (RCA Plug)

Connector Type	Mono,Phono (RCA) Plug
Plug/Mating Plug Diameter	3.20mm ID
Number of Positions/Contacts	2 Conductors, 2 Contacts
Internal Switch(s)	Does Not Contain Switch
Mounting Type	Free Hanging (In-Line)
Termination	Solder
Color	Black,Red,Blue,Green,White.....
Color - Contact	Gold
Packaging	Bulk
Contact Material	Brass
Contact Material - Plating	Gold



ORDER INFORMATION

Product NO. : KLS1-RCA-PM10

Pos. NO.

Part NO.

KLS's Part No.	Description
KLS1-RCA-PM10-R	RCA Plug / Red color
KLS1-RCA-PM10-B	RCA Plug / Black color
KLS1-RCA-PM10-G	RCA Plug / Green color
KLS1-RCA-PM10-L	RCA Plug / Blue color

Remark: Optional Color Optional

RCA Plug / RCA Socket Series

KLS1-RCA-PM11 (RCA Plug)

Connector Type	Mono,Phono (RCA) Plug
Plug/Mating Plug Diameter	3.20mm ID
Number of Positions/Contacts	2 Conductors, 2 Contacts
Internal Sw itch(s)	Does Not Contain Sw itch
Mounting Type	Free Hanging (In-Line)
Termination	Solder
Color	Black,Red,Blue,Green,White.....
Color - Contact	Gold
Packaging	Bulk
Contact Material	Brass
Contact Material - Plating	Gold



ORDER INFORMATION

Product NO. : KLS1-RCA-PM11

Pos. NO.

Part NO.

KLS's Part No.	Description
KLS1-RCA-PM11-R	RCA Plug / Red color
KLS1-RCA-PM11-B	RCA Plug / Black color
KLS1-RCA-PM11-G	RCA Plug / Green color
KLS1-RCA-PM11-L	RCA Plug / Blue color

Remark: Optional Color Optional

RCA Plug / RCA Socket Series

KLS1-RCA-PM12 (RCA Plug)

Connector Type	Mono,Phono (RCA) Plug
Plug/Mating Plug Diameter	3.20mm ID
Number of Positions/Contacts	2 Conductors, 2 Contacts
Internal Switch(s)	Does Not Contain Switch
Mounting Type	Free Hanging (In-Line)
Termination	Solder
Color	Black,Red,Blue,Green,White.....
Color - Contact	Gold
Packaging	Bulk
Contact Material	Brass
Contact Material - Plating	Gold



ORDER INFORMATION

Product NO. : KLS1-RCA-PM12

Pos. NO.

Part NO.

KLS's Part No.	Description
KLS1-RCA-PM12-R	RCA Plug / Red color
KLS1-RCA-PM12-B	RCA Plug / Black color
KLS1-RCA-PM12-G	RCA Plug / Green color
KLS1-RCA-PM12-L	RCA Plug / Blue color

Remark: Optional Color Optional

RCA Plug / RCA Socket Series

KLS1-RCA-PM13 (RCA Plug)

Connector Type	Mono,Phono (RCA) Plug
Plug/Mating Plug Diameter	3.20mm ID
Number of Positions/Contacts	2 Conductors, 2 Contacts
Internal Sw itch(s)	Does Not Contain Sw itch
Mounting Type	Free Hanging (In-Line)
Termination	Solder
Color	Black,Red,Blue,Green,White.....
Color - Contact	Gold
Packaging	Bulk
Contact Material	Brass
Contact Material - Plating	Gold



ORDER INFORMATION

Product NO. : KLS1-RCA-PM13

Pos. NO.

Part NO.

KLS's Part No.	Description
KLS1-RCA-PM13-R	RCA Plug / Red color
KLS1-RCA-PM13-B	RCA Plug / Black color
KLS1-RCA-PM13-G	RCA Plug / Green color
KLS1-RCA-PM13-L	RCA Plug / Blue color

Remark: Optional Color Optional

RCA Plug / RCA Socket Series

KLS1-RCA-PM14 (RCA Plug)

Connector Type	Mono,Phono (RCA) Plug
Plug/Mating Plug Diameter	3.20mm ID
Number of Positions/Contacts	2 Conductors, 2 Contacts
Internal Switch(s)	Does Not Contain Switch
Mounting Type	Free Hanging (In-Line)
Termination	Solder
Color	Black,Red,Blue,Green,White.....
Color - Contact	Gold
Packaging	Bulk
Contact Material	Brass
Contact Material - Plating	Gold



ORDER INFORMATION

Product NO. : KLS1-RCA-PM14

Pos. NO.

Part NO.

KLS's Part No.	Description
KLS1-RCA-PM14-R	RCA Plug / Red color
KLS1-RCA-PM14-B	RCA Plug / Black color
KLS1-RCA-PM14-G	RCA Plug / Green color
KLS1-RCA-PM14-L	RCA Plug / Blue color

Remark: Optional Color Optional

RCA Plug / RCA Socket Series

KLS1-RCA-PM15 (RCA Plug)

Connector Type	Mono,Phono (RCA) Plug
Plug/Mating Plug Diameter	3.20mm ID
Number of Positions/Contacts	2 Conductors, 2 Contacts
Internal Switch(s)	Does Not Contain Switch
Mounting Type	Free Hanging (In-Line)
Termination	Solder
Color	Black,Red,Blue,Green,White.....
Color - Contact	Gold
Packaging	Bulk
Contact Material	Brass
Contact Material - Plating	Gold



ORDER INFORMATION

Product NO. : KLS1-RCA-PM15

Pos. NO.

Part NO.

KLS's Part No.	Description
KLS1-RCA-PM15-R	RCA Plug / Red color
KLS1-RCA-PM15-B	RCA Plug / Black color
KLS1-RCA-PM15-G	RCA Plug / Green color
KLS1-RCA-PM15-L	RCA Plug / Blue color

Remark: Optional Color Optional

RCA Plug / RCA Socket Series

KLS1-RCA-PM16 (RCA Plug)

Connector Type	Mono,Phono (RCA) Plug
Plug/Mating Plug Diameter	3.20mm ID
Number of Positions/Contacts	2 Conductors, 2 Contacts
Internal Sw itch(s)	Does Not Contain Sw itch
Mounting Type	Free Hanging (In-Line)
Termination	Solder
Color	Black,Red,Blue,Green,White.....
Color - Contact	Gold
Packaging	Bulk
Contact Material	Brass
Contact Material - Plating	Gold



ORDER INFORMATION

Product NO. : KLS1-RCA-PM16

Pos. NO.

Part NO.

KLS's Part No.	Description
KLS1-RCA-PM16-R	RCA Plug / Red color
KLS1-RCA-PM16-B	RCA Plug / Black color
KLS1-RCA-PM16-G	RCA Plug / Green color
KLS1-RCA-PM16-L	RCA Plug / Blue color

Remark: Optional Color Optional

RCA Plug / RCA Socket Series

KLS1-RCA-PM17 (RCA Plug)

Connector Type	Mono,Phono (RCA) Plug
Plug/Mating Plug Diameter	3.20mm ID
Number of Positions/Contacts	2 Conductors, 2 Contacts
Internal Sw itch(s)	Does Not Contain Sw itch
Mounting Type	Free Hanging (In-Line)
Termination	Solder
Color	Black,Red,Blue,Green,White.....
Color - Contact	Gold
Packaging	Bulk
Contact Material	Brass
Contact Material - Plating	Gold



ORDER INFORMATION

Product NO. : KLS1-RCA-PM17

Pos. NO.

Part NO.

KLS's Part No.	Description
KLS1-RCA-PM17-R	RCA Plug / Red color
KLS1-RCA-PM17-B	RCA Plug / Black color
KLS1-RCA-PM17-G	RCA Plug / Green color
KLS1-RCA-PM17-L	RCA Plug / Blue color

Remark: Optional Color Optional

RCA Plug / RCA Socket Series

KLS1-RCA-PM18 (RCA Plug)

Connector Type	Mono,Phono (RCA) Plug
Plug/Mating Plug Diameter	3.20mm ID
Number of Positions/Contacts	2 Conductors, 2 Contacts
Internal Sw itch(s)	Does Not Contain Sw itch
Mounting Type	Free Hanging (In-Line)
Termination	Solder
Color	Black,Red,Blue,Green,White.....
Color - Contact	Gold
Packaging	Bulk
Contact Material	Brass
Contact Material - Plating	Gold



ORDER INFORMATION

Product NO. : KLS1-RCA-PM18

Pos. NO.

Part NO.

KLS's Part No.	Description
KLS1-RCA-PM18-R	RCA Plug / Red color
KLS1-RCA-PM18-B	RCA Plug / Black color
KLS1-RCA-PM18-G	RCA Plug / Green color
KLS1-RCA-PM18-L	RCA Plug / Blue color

Remark: Optional Color Optional

RCA Plug / RCA Socket Series

KLS1-RCA-PMR-01 (RCA Plug)

Connector Type	Phono (RCA) Plug
Gender	Male
Signal Lines	Mono
Plug/Mating Plug Diameter	3.20mm ID
Number of Positions/Contacts	2 Conductors, 2 Contacts
Internal Sw itch(s)	Does Not Contain Sw itch
Mounting Type	Free Hanging (In-Line)
Termination	Solder Eyelet(s)
Shielding	Unshielded
Features	Strain Relief
Color - Contact	Silver
Packaging	Bulk
Contact Material	Brass
Housing Color	Black,Red.....
Housing Material	Thermoplastic
Operating Temperature	-20°C ~ 85°C



ORDER INFORMATION

Product NO. : KLS1-RCA-PMR-01

Pos. NO.

Part NO.

KLS's Part No.	Description
KLS1-RCA-PMR01-R	RCA Plug / Red color
KLS1-RCA-PMR01-B	RCA Plug / Black color
KLS1-RCA-PMR01-G	RCA Plug / Green color
KLS1-RCA-PMR01-L	RCA Plug / Blue color

Remark: Optional Color Optional

RCA Plug / RCA Socket Series

KLS1-RCA-PMR-02 (RCA Plug)

Connector Type	Phono (RCA) Plug
Gender	Male
Signal Lines	Mono
Plug/Mating Plug Diameter	3.20mm ID
Number of Positions/Contacts	2 Conductors, 2 Contacts
Internal Sw itch(s)	Does Not Contain Sw itch
Mounting Type	Free Hanging (In-Line)
Termination	Solder Eyelet(s)
Shielding	Unshielded
Features	Strain Relief
Color - Contact	Silver
Packaging	Bulk
Contact Material	Brass
Housing Color	Black,Red,Blue,Green,White.....
Housing Material	Thermoplastic
Operating Temperature	-20°C ~ 85°C



ORDER INFORMATION

Product NO. : KLS1-RCA-PMR-02

Pos. NO.

Part NO.

KLS's Part No.	Description
KLS1-RCA-PMR02-R	RCA Plug / Red color
KLS1-RCA-PMR02-B	RCA Plug / Black color
KLS1-RCA-PMR02-G	RCA Plug / Green color
KLS1-RCA-PMR02-L	RCA Plug / Blue color

Remark: Optional Color Optional

RCA JACK Series

KLS1-RCA-101 RCA Jack PCB Mount Vertical

Electrical Specification:

Contact resistance : 30mΩ Max
Insulation resistance: 50MΩ Min at DC 500V
Withstand voltage : AC 500V(50Hz) 1min
Operating Temperature: -25°C~+85°C

Materials

Housing: PBT UL94V~0
Terminal 1: C. R. Steel
Terminal 4: Brass



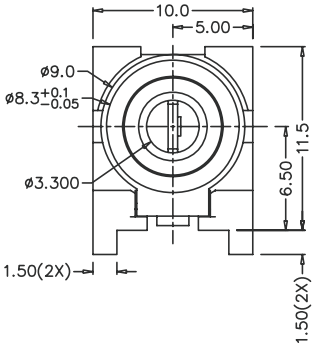

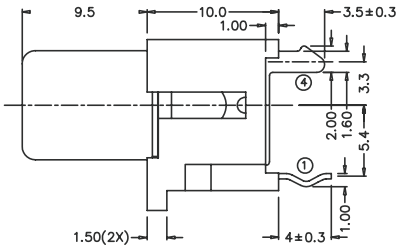

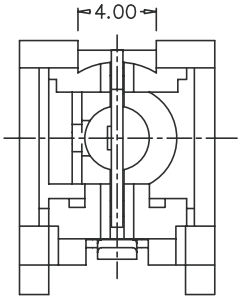

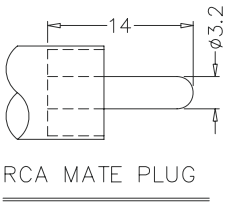

RCA MATE PLUG

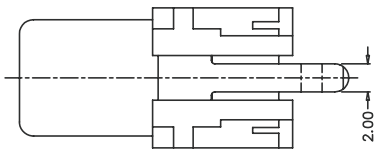

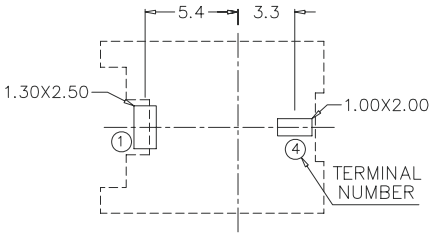

PCB LAYOUT
(BOTTOM VIEW)

MODEL NO.	RCA-101
SCHEMATIC	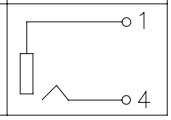

ORDER INFORMATION

Product NO.: KLS1-RCA-101-N-R

- Pos. NO.
- RCA Jack Type
- N:Nickel Plated
- Color: R : Red
  B : Black
  Y : Yellow
  W : White

RCA JACK Series

I

KLS1-RCA-101A RCA Jack PCB Mount Vertical

Electrical Specification:

Contact resistance : 30mΩ Max
Insulation resistance : 50MΩ Min at DC 500V
Withstand voltage : AC 500V(50Hz) 1min
Operating Temperature : -25°C~+85°C

Materials

Housing : PBT UL94V~0
Outer Contact : Brass
Ring Spring : Brass
Tip Spring : Brass

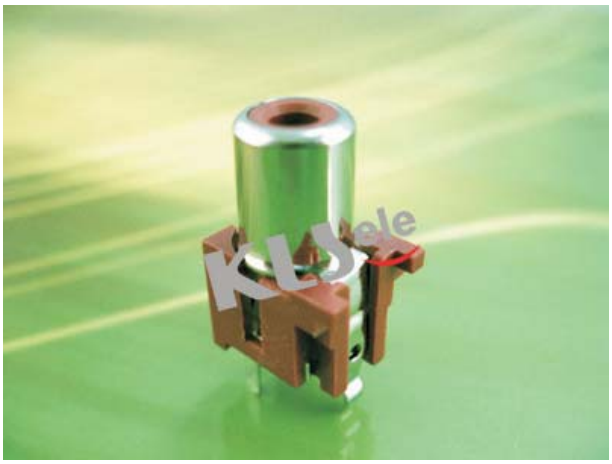

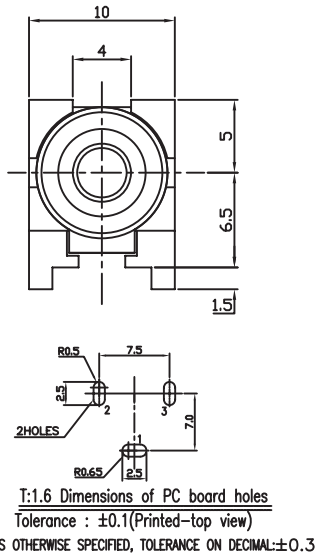

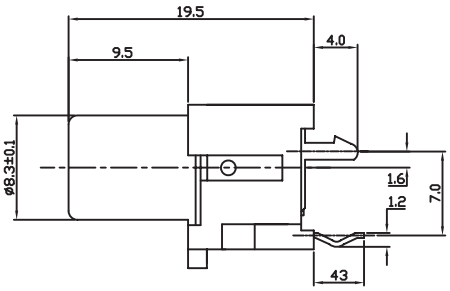

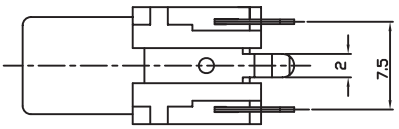

MODEL NO.	RCA-101A
SCHEMATIC	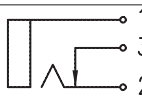

ORDER INFORMATION

Product NO.: KLS1-RCA-101A-N-R

Pos. NO.
RCA Jack Type
N:Nickel Plated

Color: R : Red
B : Black
Y : Yellow
W : White

RCA JACK Series

I

KLS1-RCA-102 RCA Jack PCB Mount Right Angle

Electrical Specification:

Contact resistance : 30mΩ Max
Insulation resistance : 50MΩ Min at DC 500V
Withstand voltage : AC 500V(50Hz) 1min
Operating Temperature : -25°C~+85°C

Materials

Housing : PBT UL94V~0
Terminal 1 : C. R. Steel
Terminal 4 : Brass



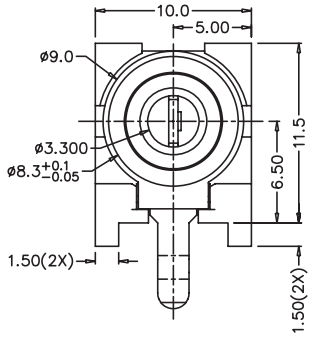

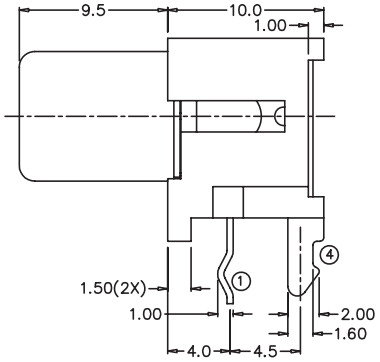

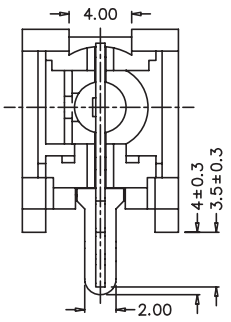

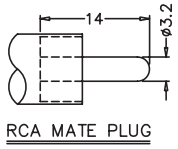

RCA MATE PLUG

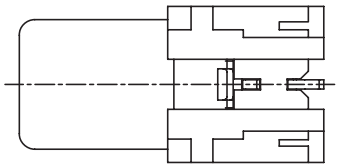

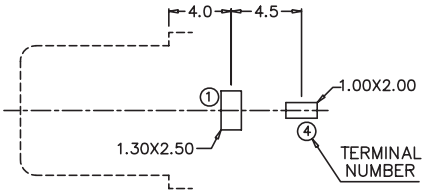

PCB LAYOUT
(BOTTOM VIEW)

MODEL NO.	RCA-102
SCHEMATIC	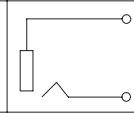

ORDER INFORMATION

Product NO.: KLS1-RCA-102-N-R

Pos. NO.
RCA Jack Type
N:Nickel Plated

Color: R : Red
B : Black
Y : Yellow
W : White

RCA JACK Series

I

KLS1-RCA-102A RCA Jack PCB Mount Right Angle

Electrical Specification:

Contact resistance : 30mΩ Max
Insulation resistance : 50MΩ Min at DC 500V
Withstand voltage : AC 500V(50Hz) 1min
Operating Temperature : -25°C~+85°C

Materials

Housing : PBT UL94V~0
Terminal 1 : C.R.Steel
Terminal 2 : Copper Alloy
Terminal 3 : Brass



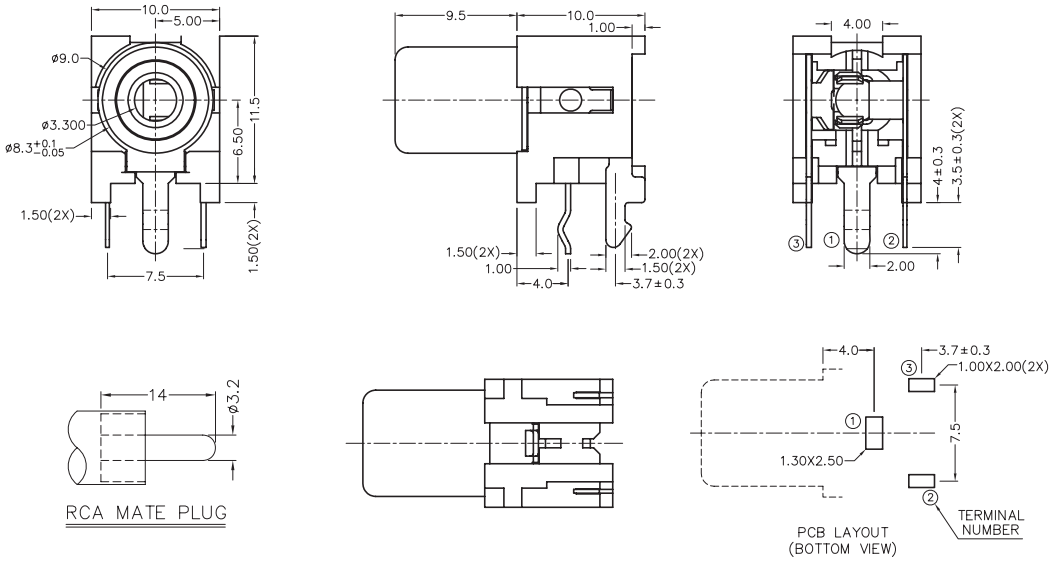

MODEL NO.	RCA-102A
SCHEMATIC	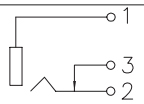

ORDER INFORMATION

Product NO.: KLS1-RCA-102A-N-R

Pos. NO.
RCA Jack Type
N:Nickel Plated

Color: R : Red
B : Black
Y : Yellow
W : White

RCA JACK Series

I

KLS1-RCA-103 RCA Jack PCB Mount Right Angle

Electrical Specification:

Contact resistance : 30mΩ Max
Insulation resistance : 50MΩ Min at DC 500V
Withstand voltage : AC 500V(50Hz) 1min
Operating Temperature : -25°C~+85°C

Materials

Housing : PBT UL94V~0
Terminal 1 : C. R. Steel
Terminal 2 : Copper Alloy
Terminal 3 : Brass
Terminal 4 : Copper Alloy



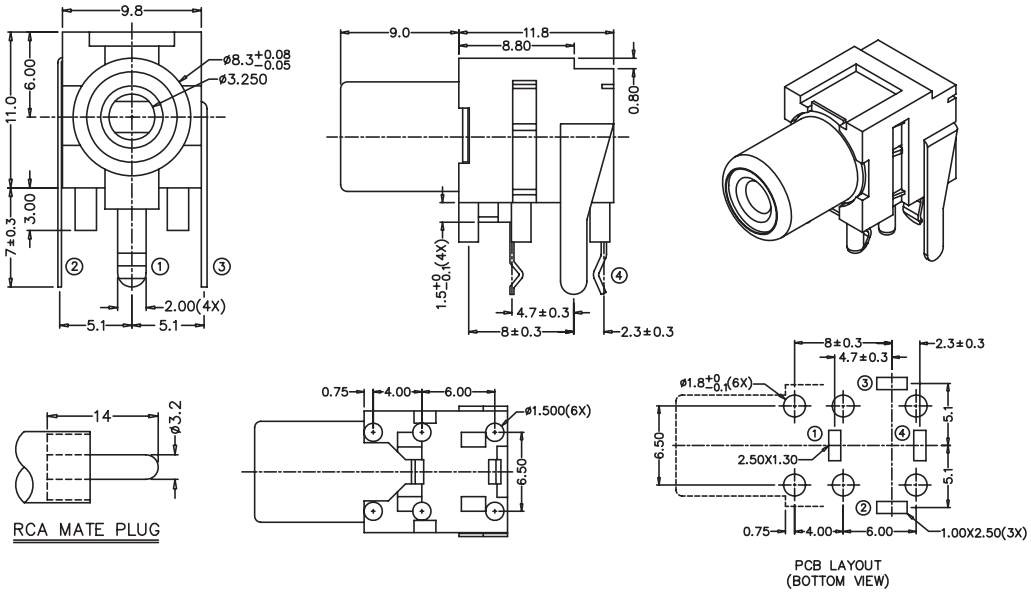

MODEL NO.	RCA-103-4	RCA-103-3	RCA-103-2A	RCA-103-2B
SCHEMATIC	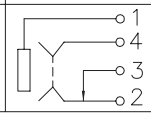	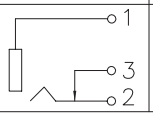	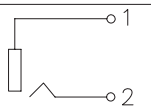	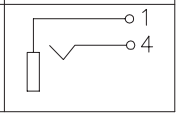

ORDER INFORMATION

Product NO.: KLS1-RCA-103-4-N-R

Pos. NO.
RCA Jack Type
N:Nickel Plated

Color: R : Red
B : Black
Y : Yellow
W : White

RCA JACK Series

KLS1-RCA-103B RCA Jack PCB Mount Right Angle

I

Electrical Specification:

Contact resistance : 30mΩ Max
Insulation resistance : 50MΩ Min at DC 500V
Withstand voltage : AC 500V(50Hz) 1min
Operating Temperature : -25°C~+85°C

Materials

Housing : PBT UL94V~0
Outer Contact : Brass
Tip Spring : QSn6.5-0.1
Shunt Spring : Brass
Terminal : Brass

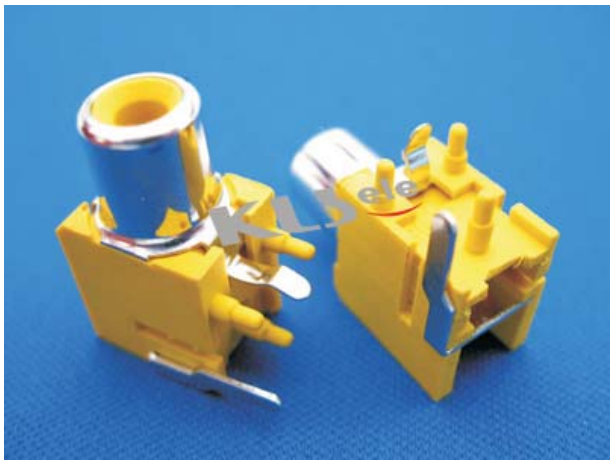

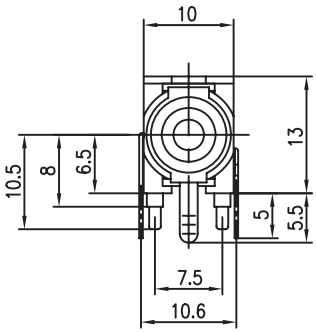

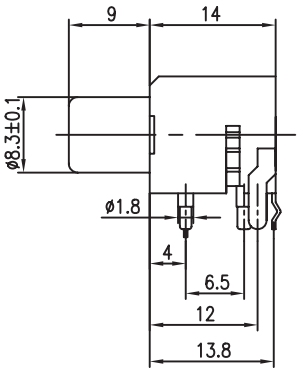

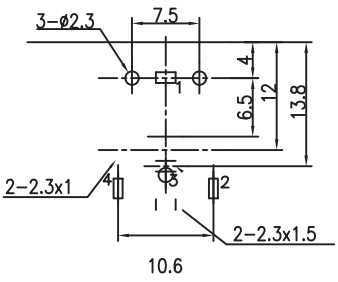

T:1.6 Dimensions of PC board holes
Tolerance : ±0.1(Printed-side view)

MODEL NO.	RCA-103B-V	RCA-103B-U	RCA-103B-W
SCHEMATIC	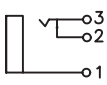	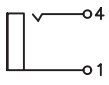	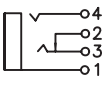

ORDER INFORMATION

Product NO.: KLS1-RCA-103B-W-N-R

Pos. NO.
RCA Jack Type
N:Nickel Plated
Color: R : Red
B : Black
Y : Yellow
W : White

RCA JACK Series

I

KLS1-RCA-104ES Horizontal Pin Jack AV RCA

Electrical Specification:

Contact resistance : 30mΩ Max
Insulation resistance : 50MΩ Min at DC 500V
Withstand voltage : AC 500V(50Hz) 1min
Operating Temperature : -25°C~+85°C

Materials

Housing : PBT UL94V~0
Outer Contact : Brass
Terminal : Brass
Cover : ABS UL94V~0



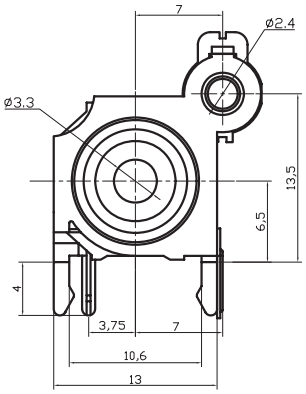

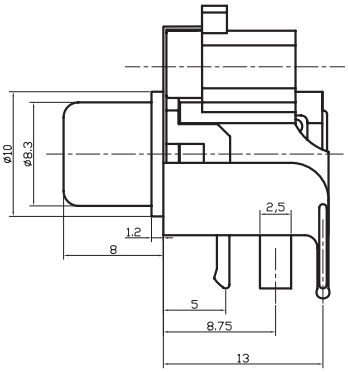

MODEL NO.	RCA-104ES
SCHEMATIC	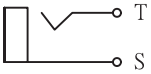

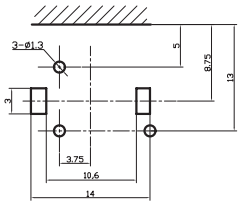

T:1.6 Dimensions of PC board holes
Tolerance : ±0.1(Printed-bottom view)
UNLESS OTHERWISE SPECIFIED, TOLERANCE ON DECIMAL: ±0.3

ORDER INFORMATION

Product NO.: KLS1-RCA-104ES-N-R

Pos. NO.
RCA Jack Type
N:Nickel Plated
Color: R : Red
B : Black
Y : Yellow
W : White

RCA JACK Series

KLS1-RCA-104EL Horizontal Pin Jack AV RCA

Electrical Specification:

Contact resistance : 30mΩ Max
Insulation resistance : 50MΩ Min at DC 500V
Withstand voltage : AC 500V(50Hz) 1min
Operating Temperature : -25°C~+85°C

Materials

Housing : PBT UL94V~0
Outer Contact : Brass
Terminal : Brass
Cover : ABS UL94V~0



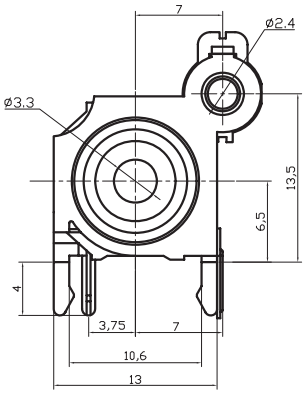

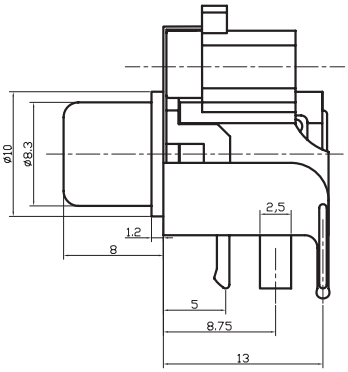

MODEL NO.	RCA-104EL
SCHEMATIC	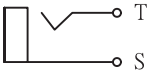

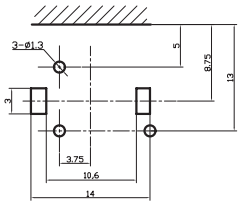

T:1.6 Dimensions of PC board holes
Tolerance : ±0.1(Printed-bottom view)
UNLESS OTHERWISE SPECIFIED, TOLERANCE ON DECIMAL: ±0.3

ORDER INFORMATION

Product NO.: KLS1-RCA-104EL-N-R

Pos. NO.
RCA Jack Type
N:Nickel Plated
Color: R : Red
B : Black
Y : Yellow
W : White

RCA JACK Series

I

KLS1-RCA-104 Horizontal Pin Jack AV RCA

Electrical Specification:

Contact resistance : 30mΩ Max
Insulation resistance : 50MΩ Min at DC 500V
Withstand voltage : AC 500V(50Hz) 1min
Operating Temperature : -25°C~+85°C

Materials

Housing : PBT UL94V~0
Outer Contact : Brass
Terminal : Brass
Cover : ABS UL94V~0



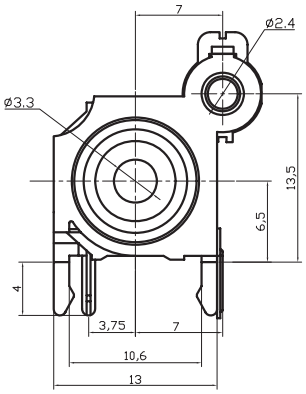

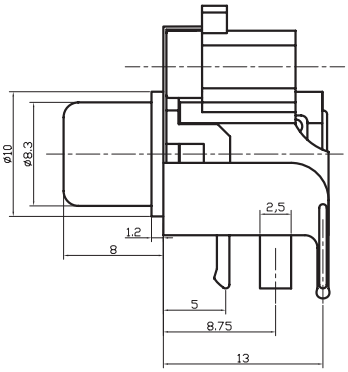

MODEL NO.	RCA-104
SCHEMATIC	T / S

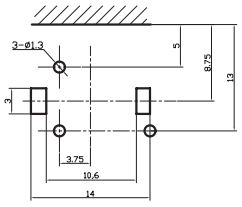

T:1.6 Dimensions of PC board holes
Tolerance : ±0.1(Printed-bottom view)
UNLESS OTHERWISE SPECIFIED, TOLERANCE ON DECIMAL: ±0.3

ORDER INFORMATION

Product NO.: KLS1-RCA-104-N-R

- Pos. NO.
- RCA Jack Type
- N:Nickel Plated
- Color: R : Red
  B : Black
  Y : Yellow
  W : White

RCA JACK Series

I

KLS1-RCA-105 Horizontal Pin Jack AV RCA

Electrical Specification:

Contact resistance : 30mΩ Max
Insulation resistance : 50MΩ Min at DC 500V
Withstand voltage : AC 500V(50Hz) 1min
Operating Temperature : -25°C~+85°C

Materials

Housing : PBT UL94V~0
Outer Contact : Brass
Cover : ABS UL94V~0
Center Contact : Brass



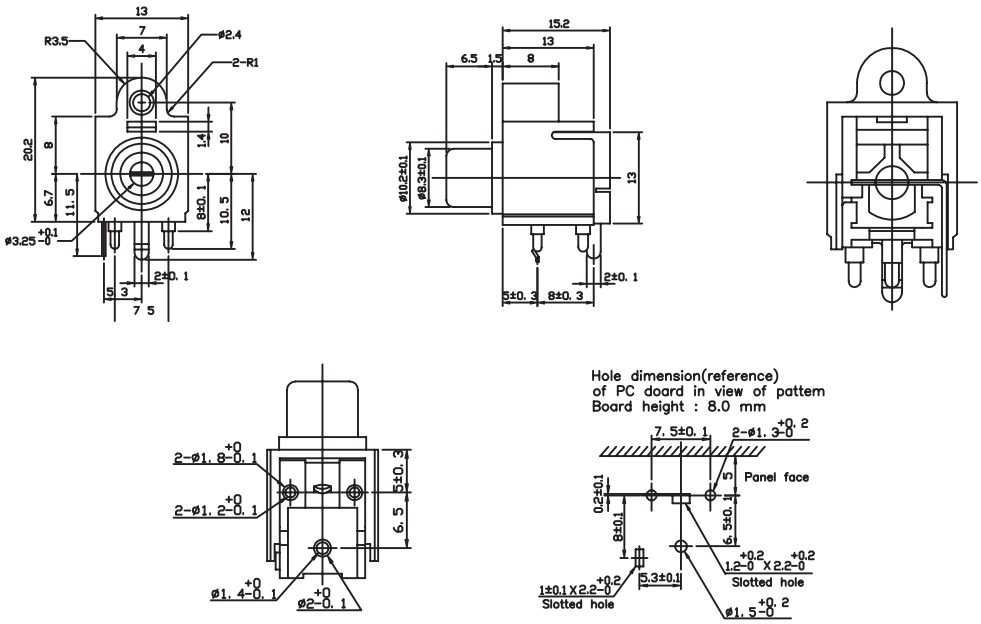

MODEL NO.	RCA-105-U	RCA-105-V
SCHEMATIC	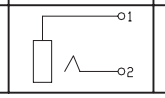	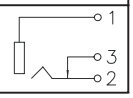

ORDER INFORMATION

Product NO.: KLS1-RCA-105-U-N-R

Pos. NO.
RCA Jack Type
N:Nickel Plated

Color: R : Red
B : Black
Y : Yellow
W : White

RCA JACK Series

KLS1-RCA-106 Metal Vertical Pin RCA Jack

Electrical Specification:

Contact resistance : 30mΩ Max
Insulation resistance : 50MΩ Min at DC 500V
Withstand voltage : AC 500V(50Hz) 1min
Operating Temperature : -25°C~+85°C

Materials

Insulator : PBT UL94V~0
Insert Ring : ABS UL94V~0
Certer Pin : Brass
Bracket : C.R.S.
Barrel : C.R.S.

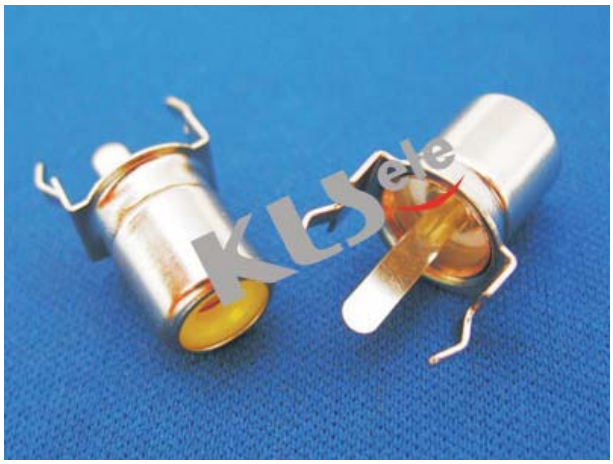

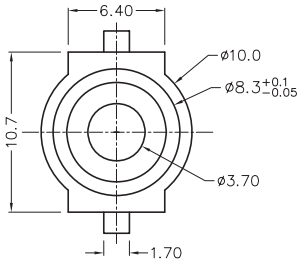

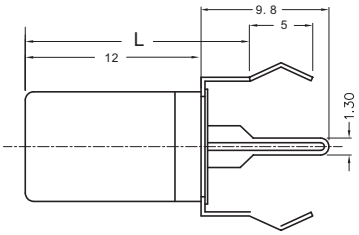

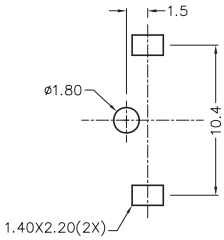

PCB LAYOUT
(BOTTOM VIEW)

MODEL NO.	RCA-106
SCHEMATIC	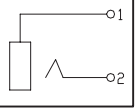

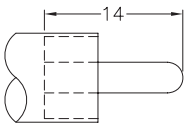

RCA MATE PLUG

ORDER INFORMATION

Product NO.: KLS1-RCA-106-N-R-15.8mm

- Pos. NO.
- RCA Jack Type
- N:Nickel Plated
- Color: R : Red, B : Black, Y : Yellow, W : White
- L: L1 : 15. 8mm, L2 : 17. 6mm, L3 : 19. 7mm or other size

All specification & dimensions are subject to change,please call your nearest KLS sales represesntative for update information

RCA JACK Series

KLS1-RCA-107 Phono 2POS Rear Panel Mount RCA Jack

Electrical Specification:

Contact resistance : 30mΩ Max
Insulation resistance : 50MΩ Min at DC 500V
Withstand voltage : AC 500V(50Hz) 1min
Operating Temperature : -25°C~+85°C

Materials

Contacts : Brass Nickel Plated
Housing : Brass Nickel Plated
Insulator : PBT UL94V~0



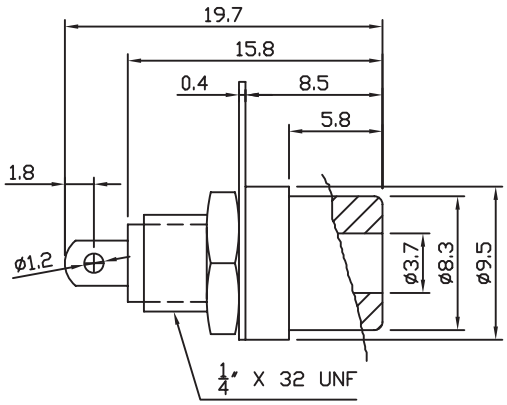

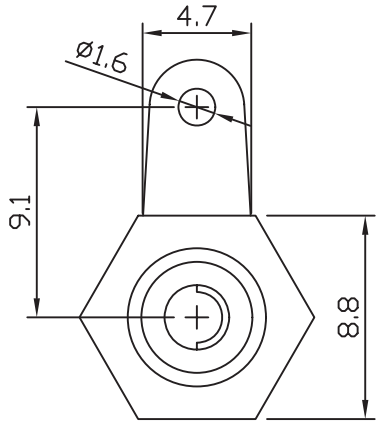

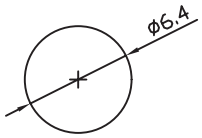

PANEL CUTOUT

ORDER INFORMATION

Product NO.: KLS1-RCA-107-N-R

Pos. NO.
RCA Jack Type
N:Nickel Plated

Color: R : Red
B : Black
Y : Yellow
W : White
G : Green
L : Blue

All specification & dimensions are subject to change,please call your nearest KLS sales represesntative for update information

RCA JACK Series

I

KLS1-RCA-108 Glod Plated Panel RCA Jack

Electrical Specification:

Contact resistance : 30mΩ Max
Insulation resistance : 50MΩ Min at DC 500V
Withstand voltage : AC 500V(50Hz) 1min
Operating Temperature : -25°C~+85°C



Materials

Contacts : Brass
Housing : Brass
Insulation Washer : PBT UL94V~0
Insert Ring : ABS UL94V~0

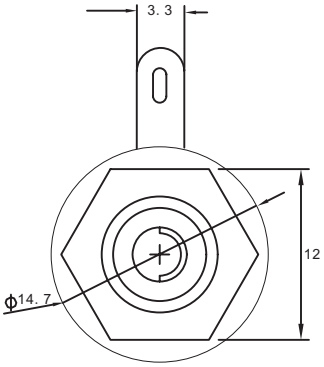

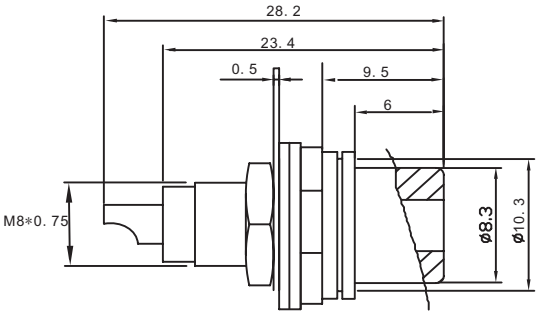

ORDER INFORMATION

Product NO.: KLS1-RCA-108-G-R

- Pos. NO.
- RCA Jack Type
- G:Gold Plated
- Color: R : Red
  B : Black
  Y : Yellow
  W : White
  G : Green
  L : Blue

RCA JACK Series

I

KLS1-RCA-110 Metal R/A PCB Mount RCA Jack

Electrical Specification:

Contact resistance : 30mΩ Max
Insulation resistance : 50MΩ Min at DC 500V
Withstand voltage : AC 500V(50Hz) 1min
Operating Temperature : -25°C~+85°C

Materials:

Insulator : PBT UL94V~0
Body : Steel
Terminal : Brass



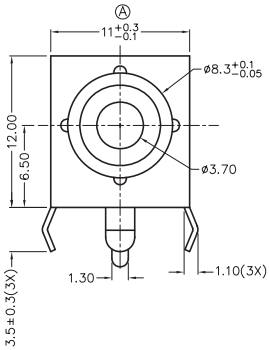

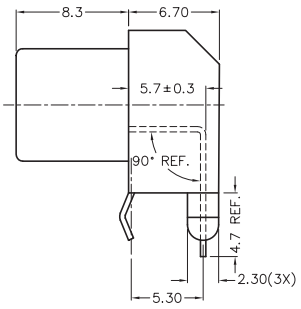

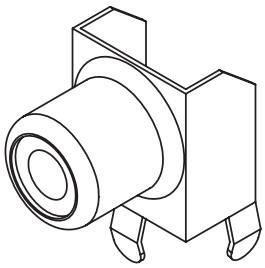

MODEL NO.	RCA-110
SCHEMATIC	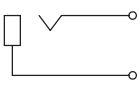

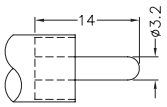

RCA MATE PLUG

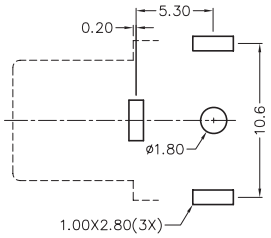

PCB LAYOUT
(TOP VIEW)

ORDER INFORMATION

Product NO.: KLS1-RCA-110-N-R

Pos. NO.
RCA Jack Type
G:Nickel Plated

Color: R:Red
B:Black
Y:Yellow
W:White
G:Green
L:Blue

RCA JACK Series

KLS1-RCA-111 Metal R/A PCB Mount RCA Jack

Electrical Specification:

Contact resistance : 30mΩ Max
Insulation resistance : 50MΩ Min at DC 500V
Withstand voltage : AC 500V(50Hz) 1min
Operating Temperature : -25°C~+85°C

Materials:

Insulator : PBT UL94V~0
Body : Steel
Terminal : Brass



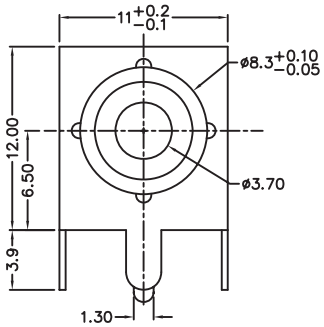

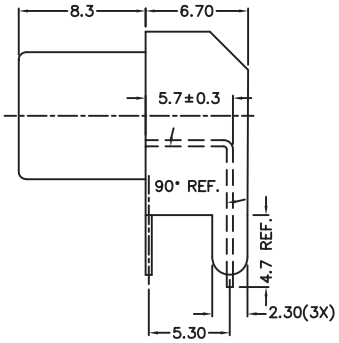

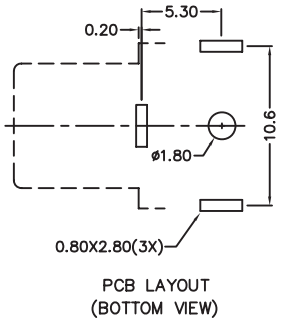

PCB LAYOUT
(BOTTOM VIEW)

MODEL NO.	RCA-111
SCHEMATIC	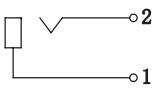

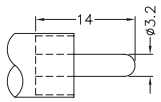

RCA MATE PLUG

ORDER INFORMATION

Product NO.: KLS1-RCA-111-N-R

- Pos. NO.
- RCA Jack Type
- G:Nickel Plated
- Color: R:Red, B:Black, Y:Yellow, W:White, G:Green, L:Blue

RCA JACK Series

KLS1-RCA-112 Metal R/A PCB Mount RCA Jack

Electrical Specification:

Contact resistance : 30mΩ Max
Insulation resistance : 50MΩ Min at DC 500V
Withstand voltage : AC 500V(50Hz) 1min
Operating Temperature : -25°C~+85°C

Materials:

Housing : PBT UL94V~0
Outer Contact : Brass
Terminal : Brass
Shield : Steel

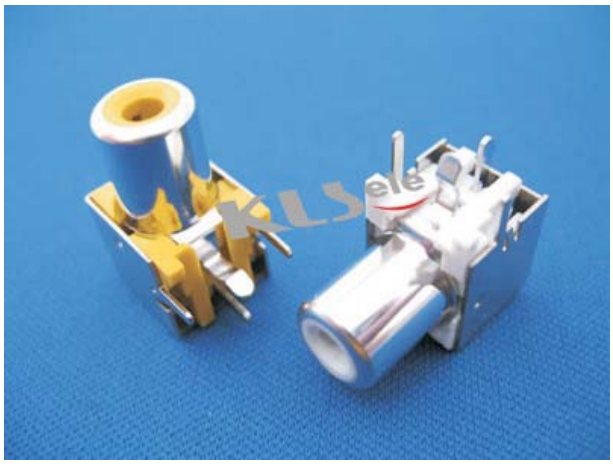

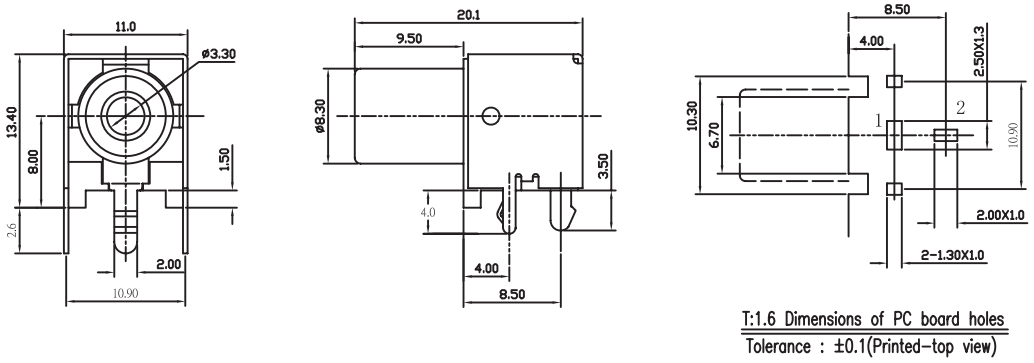

T:1.6 Dimensions of PC board holes
Tolerance : ±0.1(Printed-top view)

MODEL NO.	RCA-112
SCHEMATIC	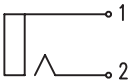

ORDER INFORMATION

Product NO.: KLS1-RCA-112-N-R

- Pos. NO.
- RCA Jack Type
- G:Nickel Plated
- Color: R:Red, B:Black, Y:Yellow, W:White

RCA JACK Series

I

KLS1-RCA-201 Metal R/A PCB Mount Dual RCA Jack

Electrical Specification:

Contact resistance : 30mΩ Max
Insulation resistance : 50MΩ Min at DC 500V
Withstand voltage : AC 500V(50Hz) 1min
Operating Temperature : -25°C~+85°C

Materials:

Barrel : Steel
Insulator : PBT UL94V~0
Insert Ring : ABS UL94V~0
Center Pin : Brass
Frame : Steel



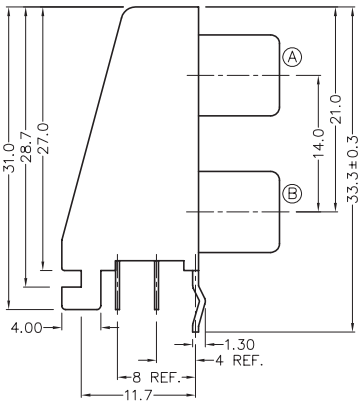

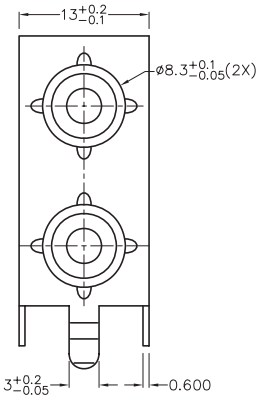

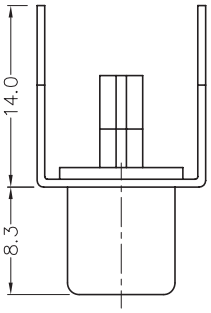

MODEL NO.	RCA-201
SCHEMATIC	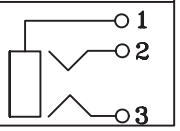

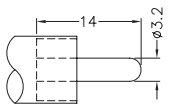

RCA MATE PLUG

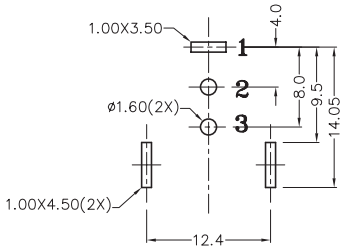

PCB LAYOUT
(BOTTOM VIEW)

ORDER INFORMATION

Product NO.: KLS1-RCA-201-N-BK-BK

Pos. NO.
RCA Jack Type
N:Nickel Plated

Color: BK-BK:Black-Black
WH-WH:White-White
RE-RE:Red-Red
RE-WH:Red-White
WH-RE:White-Red
YE-RE:Yellow-Red

All specification & dimensions are subject to change,please call your nearest KLS sales represesntative for update information

RCA JACK Series

I

KLS1-RCA-201 Metal R/A PCB Mount Dual RCA Jack

Electrical Specification:

Contact resistance : 30mΩ Max
Insulation resistance : 50MΩ Min at DC 500V
Withstand voltage : AC 500V(50Hz) 1min
Operating Temperature : -25°C~+85°C

Materials:

Barrel : Steel
Insulator : PBT UL94V~0
Insert Ring : ABS UL94V~0
Center Pin : Brass
Frame : Steel



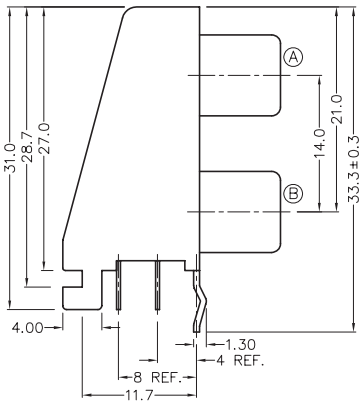

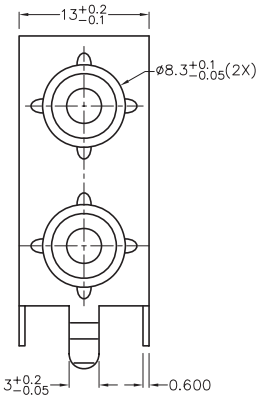

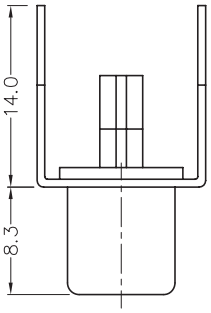

MODEL NO.	RCA-201
SCHEMATIC	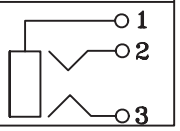

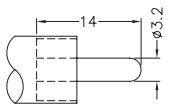

RCA MATE PLUG

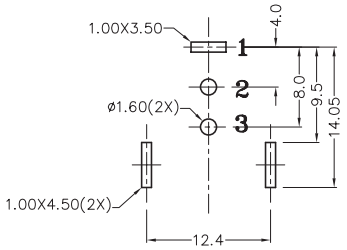

PCB LAYOUT
(BOTTOM VIEW)

ORDER INFORMATION

Product NO.: KLS1-RCA-201-G-BK-BK

Pos. NO.
RCA Jack Type
G:Gold Plated

Color: BK-BK:Black-Black
WH-WH:White-White
RE-RE:Red-Red
RE-WH:Red-White
WH-RE:White-Red
YE-RE:Yellow-Red

All specification & dimensions are subject to change,please call your nearest KLS sales represesntative for update information

RCA JACK Series

KLS1-RCA-202 Metal R/A PCB Mount Dual RCA Jack

Electrical Specification:

Contact resistance : 30mΩ Max
Insulation resistance : 50MΩ Min at DC 500V
Withstand voltage : AC 500V(50Hz) 1min
Operating Temperature : -25°C~+85°C



Materials:

Plastic : PBT UL94V~0
Sealed Plate : Brass
Terminal : Brass
Outer Contact : Brass
Washer : PBT UL94V~0
Cover : ABS UL94V~0
Housing : PBT UL94V~0

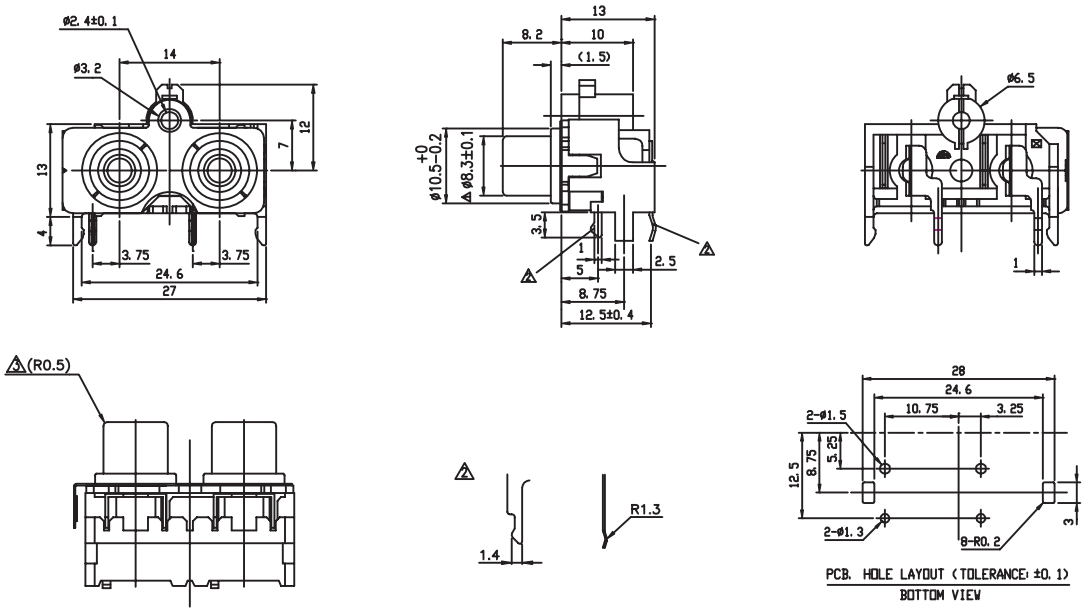

ORDER INFORMATION

Product NO.: KLS1-RCA-202-N-BK-BK

Pos. NO.
RCA Jack Type
G:Nickel Plated

Color: BK-BK : Black-Black
RE-WH : Red-White
WH-RE : White-Red
RE-YE : Red-Yellow

RCA JACK Series

KLS1-RCA-203 Metal R/A PCB Mount Dual RCA Jack

Electrical Specification:

Contact resistance : 30mΩ Max
Insulation resistance : 50MΩ Min at DC 500V
Withstand voltage : AC 500V(50Hz) 1min
Operating Temperature : -25°C~+85°C

Materials:

Sealed Plate : Brass
Terminal : Brass
Outer Contact : Brass
Washer : PBT UL94V~0
Cover : ABS UL94V~0
Housing : PBT UL94V~0



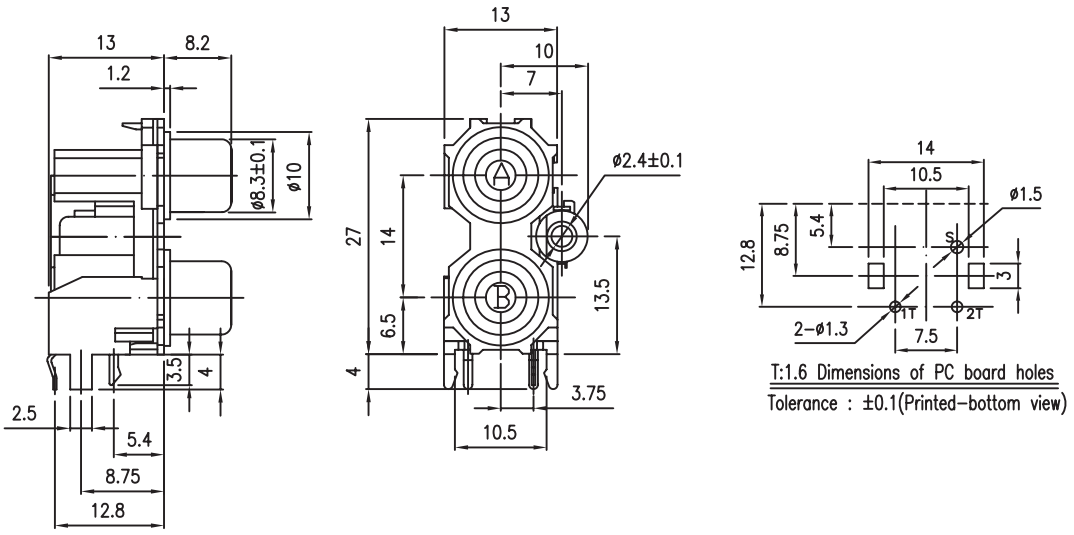

MODEL NO.	RCA-203
SCHEMATIC	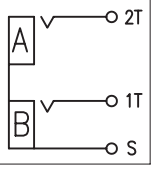

ORDER INFORMATION

Product NO.: KLS1-RCA-203-N-WH-YE

Pos. NO.
RCA Jack Type
G:Nickel Plated

Color: WH-YE:White-Yellow
RE-WH : Red-White
WH-RE : White-Red
RE-YE : Red-Yellow

RCA JACK Series

KLS1-RCA-204 PIN Jack+S PCB Mount R/A Jack

Electrical Specification:

Contact resistance : 30mΩ Max
Insulation resistance : 50MΩ Min at DC 500V
Withstand voltage : AC 500V(50Hz) 1min
Operating Temperature : -25°C~+85°C

Materials

Sealed Plate : Steel
Earth Fitting : Brass
Terminal : Brass
Housing : PBT UL94V~0
Washer : ABS UL94V~0
Outer Contact : Brass
Ground Contact : Brass
Center Contact : Brass

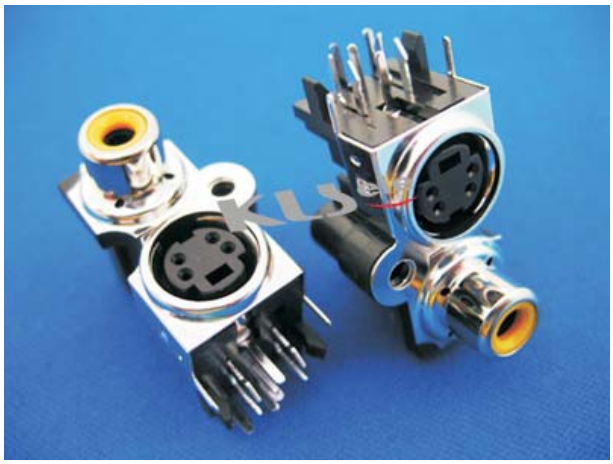

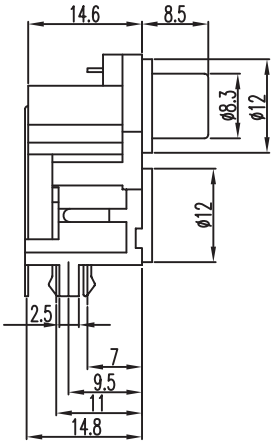

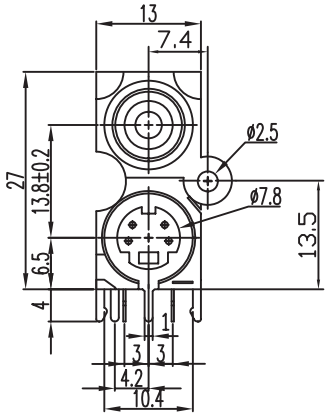

MODEL NO.	RCA-204	
	S JACK	PIN JACK
SCHEMATIC	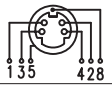	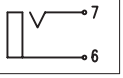

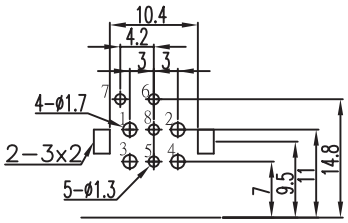

T:1.6 Dimensions of PC board holes
Tolerance : ±0.1(Printed-top view)

ORDER INFORMATION

Product NO.: KLS1-RCA-204-N-R

Pos. NO.
RCA Jack Type
N:Nickel Plated

Color: R : Red
B : Black
Y : Yellow
W : White

RCA JACK Series

KLS1-RCA-205 PIN Jack+S PCB Mount R/A Jack

Electrical Specification:

Contact resistance : 30mΩ Max
Insulation resistance : 50MΩ Min at DC 500V
Withstand voltage : AC 500V(50Hz) 1min
Operating Temperature : -25°C~+85°C

Materials

Shielded Plate : Steel
Earth Fitting : Brass
Terminal : Brass
Housing : PBT UL94V~0
Washer : ABS UL94V~0
Outer Contact : Brass
Ground Contact : Brass
Center Contact : Brass

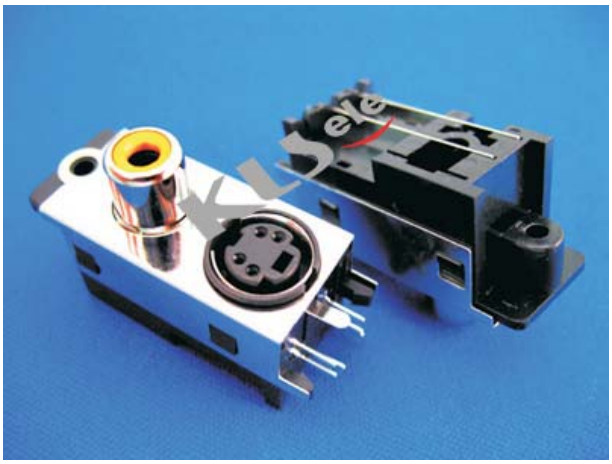

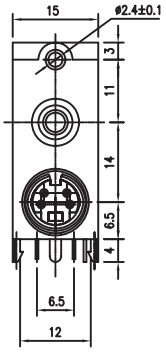

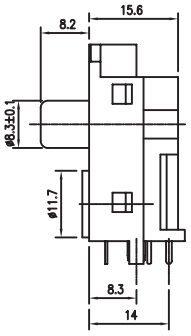

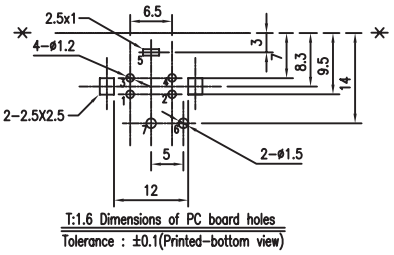

UNLESS OTHERWISE SPECIFIED, TOLERANCE ON DECIMAL: ±0.3

MODEL NO.	RCA-205	
	S JACK	PIN JACK
SCHEMATIC	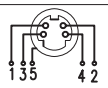	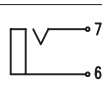

ORDER INFORMATION

Product NO.: KLS1-RCA-205-N-R

Pos. NO.
RCA Jack Type
N:Nickel Plated
Color: R : Red
B : Black
Y : Yellow
W : White

RCA JACK Series

KLS1-RCA-301 R/A PCB Mount 3P RCA Jack

Electrical Specification:

Contact resistance : 30mΩ Max
Insulation resistance : 50MΩ Min at DC 500V
Withstand voltage : AC 500V(50Hz) 1min
Operating Temperature : -25°C~+85°C

Materials:

Sealed Plate : Brass
Terminal : Brass
Outer Contact : Brass
Washer : PBT UL94V~0
Cover : ABS UL94V~0
Housing : PBT UL94V~0



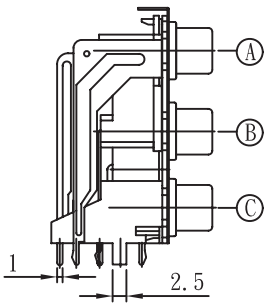

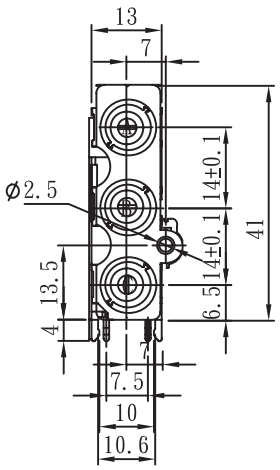

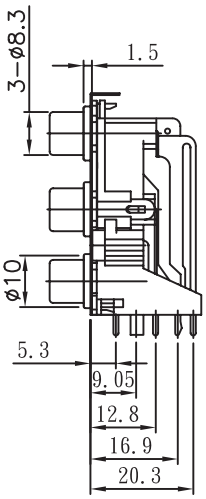

MODEL NO.	RCA-301
SCHEMATIC	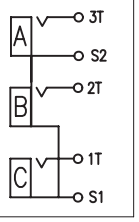

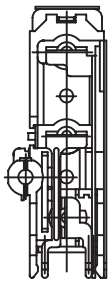

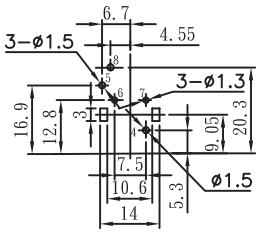

T:1.6 Dimensions of PC board holes
Tolerance : ±0.1(Printed bottom view)

UNLESS OTHERWISE SPECIFIED, TOLERANCE ON DECIMAL: ±0.3

ORDER INFORMATION

Product NO.: KLS1-RCA-301-N-YE-WH-RE

Pos. NO.
RCA Jack Type
G:Nickel Plated
Color: YE-WH-RE:
Yellow-White-Red

RCA JACK Series

KLS1-RCA-302 R/A PCB Mount 3P RCA Jack

Electrical Specification:

Contact resistance : 30mΩ Max
Insulation resistance : 50MΩ Min at DC 500V
Withstand voltage : AC 500V(50Hz) 1min
Operating Temperature : -25°C~+85°C

Materials:

Sealed Plate : Brass
Terminal : Brass
Outer Contact : Brass
Washer : PBT UL94V~0
Cover : ABS UL94V~0
Housing : PBT UL94V~0



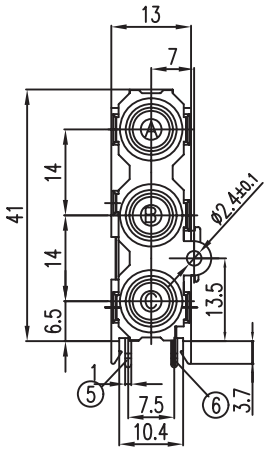

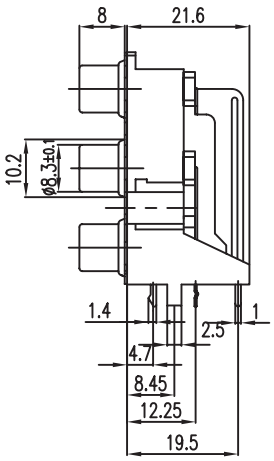

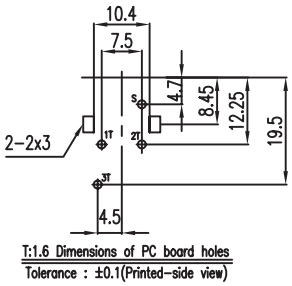

T:1.6 Dimensions of PC board holes
Tolerance : ±0.1(Printed-side view)

UNLESS OTHERWISE SPECIFIED, TOLERANCE ON DECIMAL: ±0.3

MODEL NO.	RCA-301
SCHEMATIC	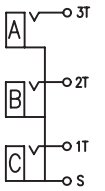

ORDER INFORMATION

Product NO.: KLS1-RCA-302-N-BL-GR-RE

Pos. NO.
RCA Jack Type
G:Nickel Plated
Color: BL-GR-RE: Blue-Green-Red

RCA JACK Series

KLS1-RCA-303 R/A PCB Mount RCA Jack

Electrical Specification:

Contact resistance : 30mΩ Max
Insulation resistance : 50MΩ Min at DC 500V
Withstand voltage : AC 500V(50Hz) 1min
Operating Temperature : -25°C~+85°C

Materials:

Sealed Plate : Brass
Terminal : Brass
Outer Contact : Brass
Washer : PBT UL94V~0
Cover : ABS UL94V~0
Housing : PBT UL94V~0

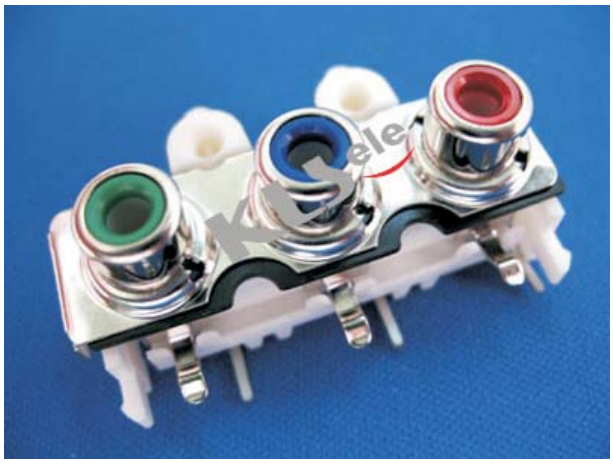

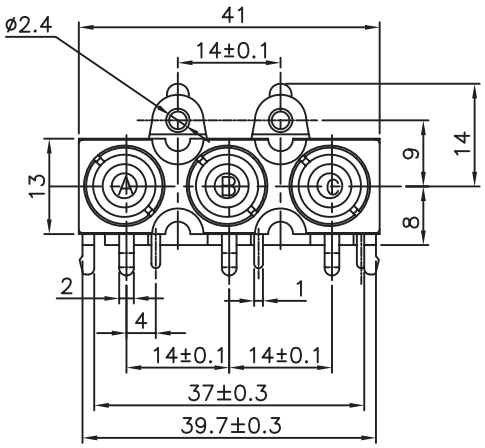

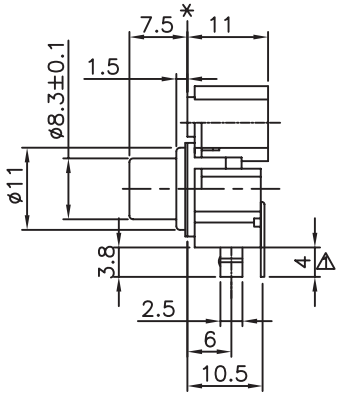

MODEL NO.	RCA-303
SCHEMATIC	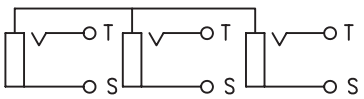

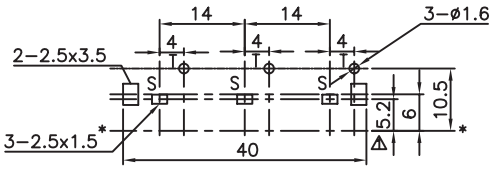

T:1.6 Dimensions of PC board holes
Tolerance : ±0.1(Printed–Top view)

UNLESS OTHERWISE SPECIFIED, TOLERANCE ON DECIMAL: ±0.3

ORDER INFORMATION

Product NO.: KLS1-RCA-303-N-GR-BL-RE

Pos. NO.
RCA Jack Type
G:Nickel Plated
Color: GR-BL-RE: Green-Blue-Red

RCA JACK Series

KLS1-RCA-303B R/A PCB Mount RCA Jack

Electrical Specification:

Contact resistance : 30mΩ Max
Insulation resistance : 50MΩ Min at DC 500V
Withstand voltage : AC 500V(50Hz) 1min
Operating Temperature : -25°C~+85°C

Materials:

Terminal : Brass
Outer Contact : Brass
Washer : PBT UL94V~0
Cover : ABS UL94V~0
Housing : PBT UL94V~0

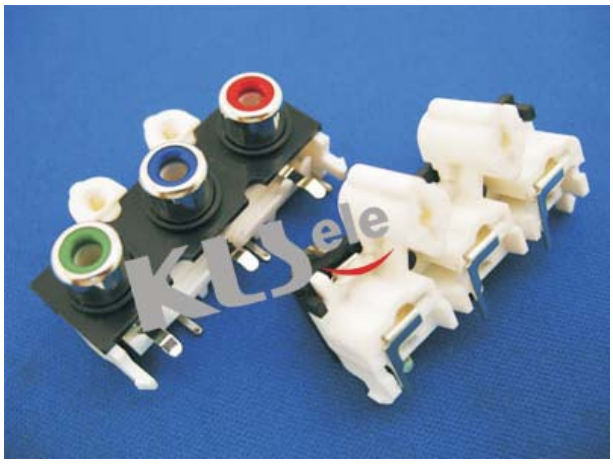

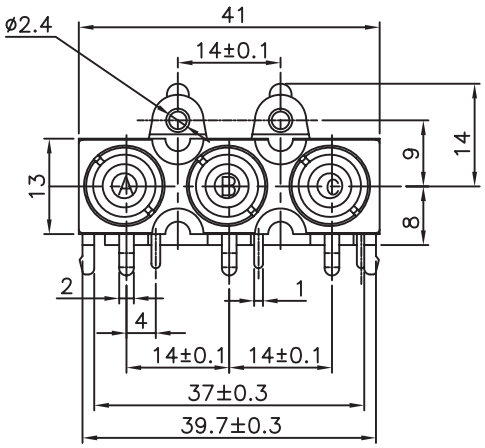

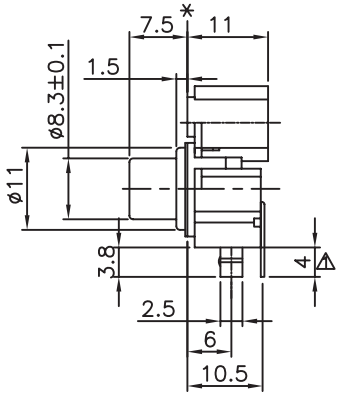

MODEL NO.	RCA-303B
SCHEMATIC	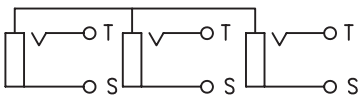

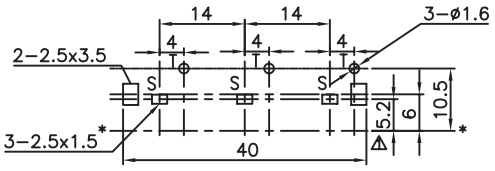

T:1.6 Dimensions of PC board holes
Tolerance : ±0.1(Printed–Top view)

UNLESS OTHERWISE SPECIFIED, TOLERANCE ON DECIMAL: ±0.3

ORDER INFORMATION

Product NO.: KLS1-RCA-303B-N-GR-BL-RE

Pos. NO.
RCA Jack Type
G:Nickel Plated
Color: GR-BL-RE: Green-Blue-Red

RCA JACK Series

KLS1-RCA-304 R/A PCB Mount RCA Jack

Electrical Specification:

Contact resistance : 30mΩ Max
Insulation resistance : 50MΩ Min at DC 500V
Withstand voltage : AC 500V(50Hz) 1min
Operating Temperature : -25°C~+85°C

Materials:

Terminal : Brass
Outer Contact : Brass
Washer : PBT UL94V~0
Cover : ABS UL94V~0
Housing : PBT UL94V~0

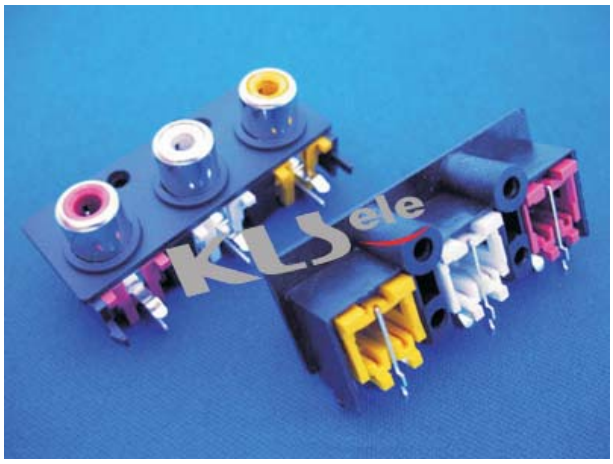

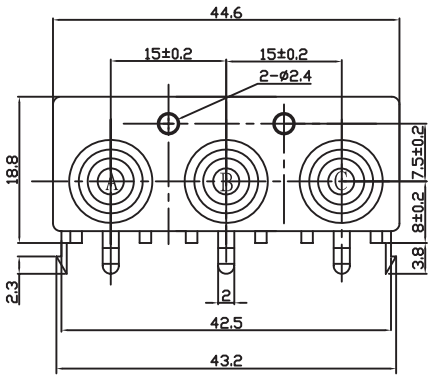

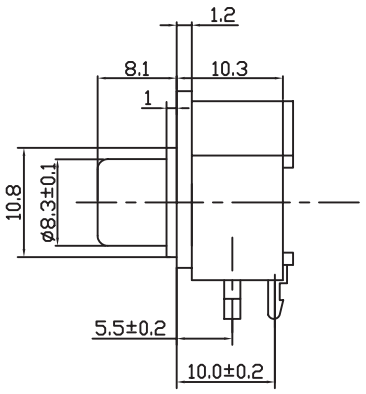

MODEL NO.	RCA-304		
SCHEMATIC	1 / 2	1 / 2	1 / 2

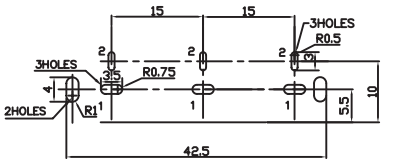

T:1.6 Dimensions of PC board holes
Tolerance : ±0.1(Printed-top view)

UNLESS OTHERWISE SPECIFIED, TOLERANCE ON DECIMAL:±0.3

ORDER INFORMATION

Product NO.: KLS1-RCA-304-N-RE-WH-YE

- Pos. NO.
- RCA Jack Type
- G:Nickel Plated
- Color: RE-WH-YE: Red-White-Yellow

RCA JACK Series

KLS1-RCA-305 R/A PCB Mount RCA Jack

Electrical Specification:

Contact resistance : 30mΩ Max
Insulation resistance : 50MΩ Min at DC 500V
Withstand voltage : AC 500V(50Hz) 1min
Operating Temperature : -25°C~+85°C

Materials:

Sealed Plate : Brass
Terminal : Brass
Outer Contact : Brass
Washer : PBT UL94V~0
Cover : ABS UL94V~0
Housing : PBT UL94V~0

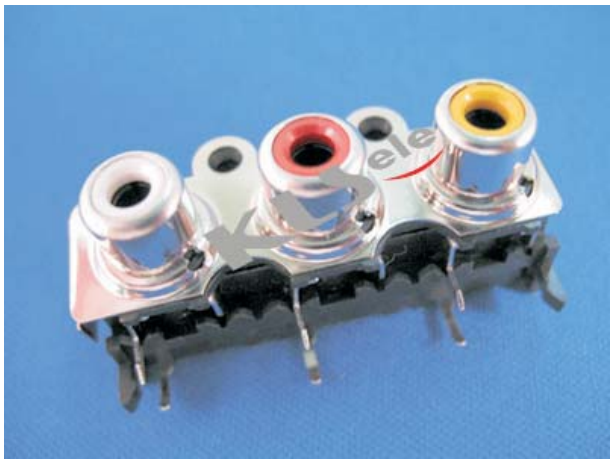

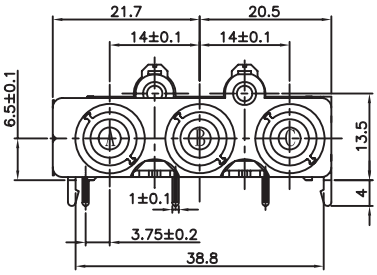

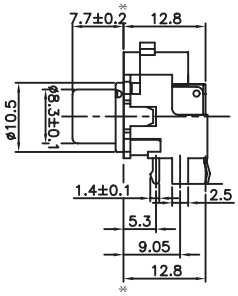

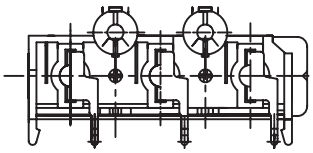

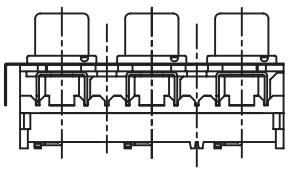

MODEL NO.	RCA-305
SCHEMATIC	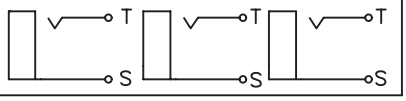

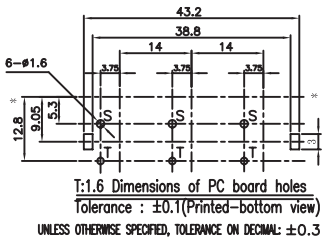

ORDER INFORMATION

Product NO.: KLS1-RCA-305-N-WH-RE-YE

- Pos. NO.
- RCA Jack Type
- G:Nickel Plated
- Color: WH-RE-YE: White-Red-Yellow

RCA JACK Series

KLS1-RCA-305B R/A PCB Mount RCA Jack

Electrical Specification:

Contact resistance : 30mΩ Max
Insulation resistance : 50MΩ Min at DC 500V
Withstand voltage : AC 500V(50Hz) 1min
Operating Temperature : -25°C~+85°C

Materials:

Terminal : Brass
Outer Contact : Brass
Washer : PBT UL94V~0
Cover : ABS UL94V~0
Housing : PBT UL94V~0

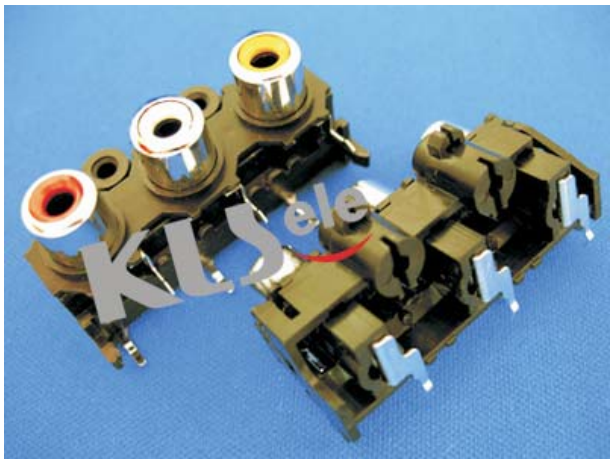

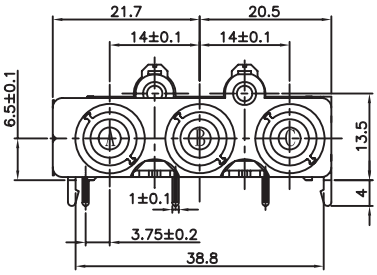

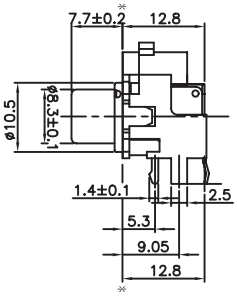

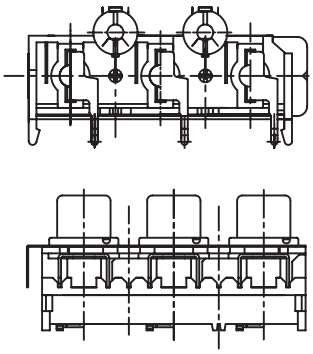

MODEL NO.	RCA-305B
SCHEMATIC	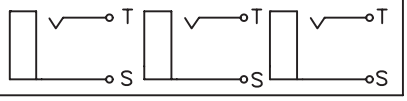

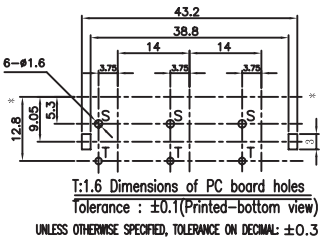

ORDER INFORMATION

Product NO.: KLS1-RCA-305B-N-RE-WH-YE

- Pos. NO.
- RCA Jack Type
- G:Nickel Plated
- Color: RE-WH-YE: Red-White-Yellow

RCA JACK Series

I

KLS1-RCA-306 R/A PCB Mount RCA Jack

Electrical Specification:

Contact resistance : 30mΩ Max
Insulation resistance : 50MΩ Min at DC 500V
Withstand voltage : AC 500V(50Hz) 1min
Operating Temperature : -25°C~+85°C

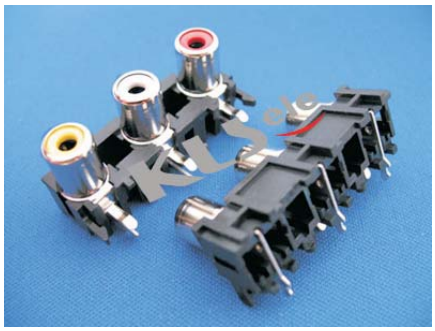

Materials:

Terminal : Brass
Shield Pin : Steel
Washer : PBT UL94V~0
Housing : PBT UL94V~0

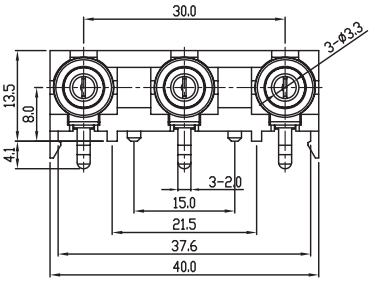

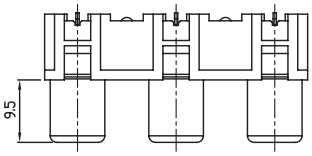

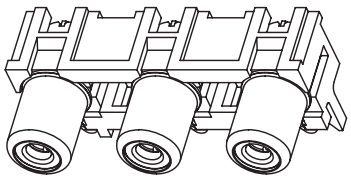

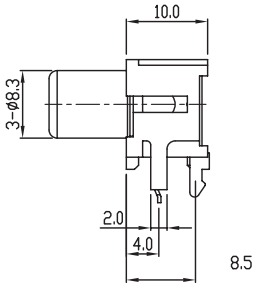

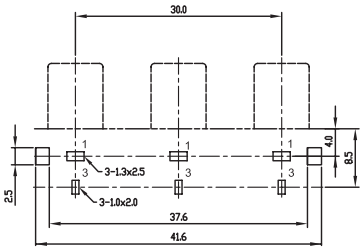

P.C.B LAYOUT
(BOTTOM VIEW)

MODEL NO.	RCA-306
SCHEMATIC	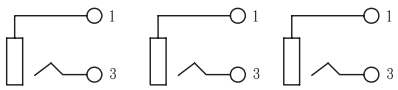

ORDER INFORMATION

Product NO.: KLS1-RCA-306-N-YE-WH-RE

Pos. NO.
RCA Jack Type
G:Nickel Plated
Color: YE-WH-RE:
Yellow-White-Red

RCA JACK Series

I

KLS1-RCA-307 R/A PCB Mount RCA Jack

Electrical Specification:

Contact resistance : 30mΩ Max
Insulation resistance : 50MΩ Min at DC 500V
Withstand voltage : AC 500V(50Hz) 1min
Operating Temperature : -25°C~+85°C

Materials:

Center Contact : Brass
Outer Contact : Brass
Washer : PBT UL94V~0
Housing : PBT UL94V~0

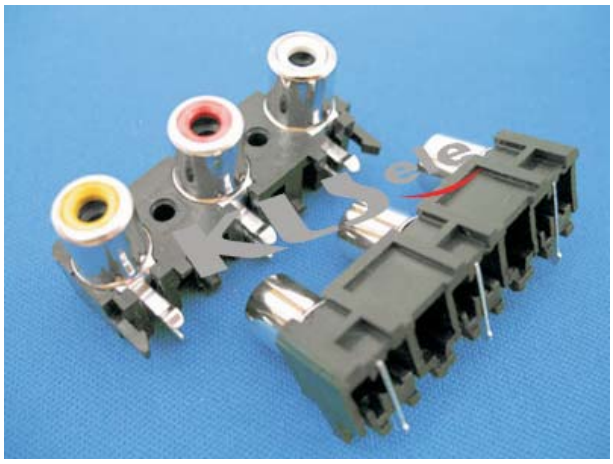

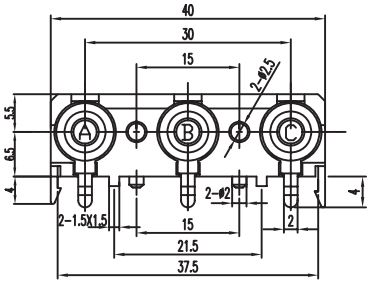

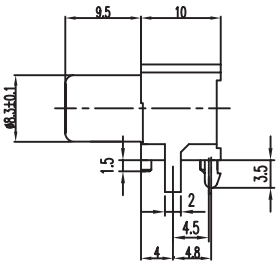

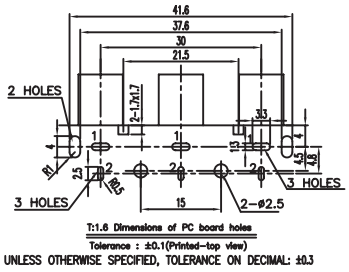

MODEL NO.	RCA-307
SCHEMATIC	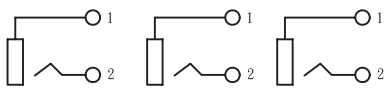

ORDER INFORMATION

Product NO.: KLS1-RCA-307-N-WH-RE-YE

- Pos. NO.
- RCA Jack Type
- G:Nickel Plated
- Color: YE-RE-WH: Yellow-Red-White

RCA JACK Series

KLS1-RCA-308 Vertical PCB Mount RCA Jack

Electrical Specification:

Contact resistance : 30mΩ Max
Insulation resistance : 50MΩ Min at DC 500V
Withstand voltage : AC 500V(50Hz) 1min
Operating Temperature : -25°C~+85°C

Materials:

Outer Contact : Brass
Terminal : Brass
Cover : ABS UL94V~0
Washer : PBT UL94V~0
Housing : PBT UL94V~0

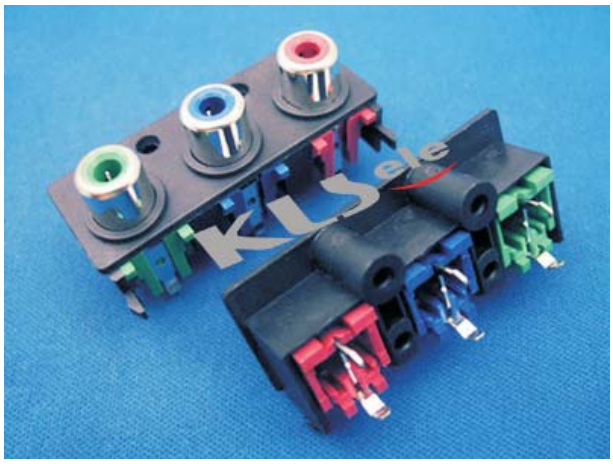

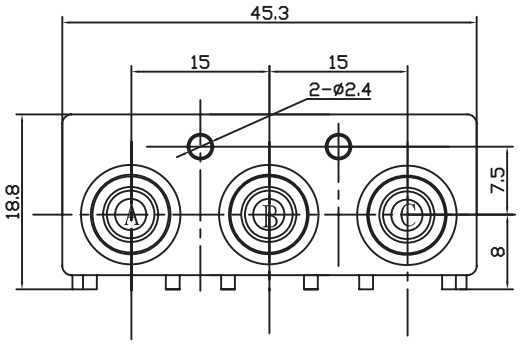

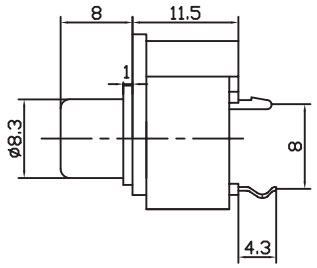

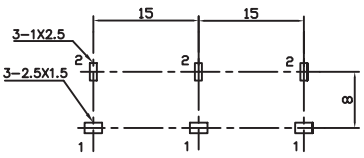

T:1.6 Dimensions of PC board holes
Tolerance : ±0.1(Printed-top view)

UNLESS OTHERWISE SPECIFIED, TOLERANCE ON DECIMAL:±0.3

MODEL NO.	RCA-308		
SCHEMATIC	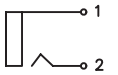	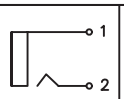	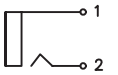

ORDER INFORMATION

Product NO.: KLS1-RCA-308-N-GR-BL-RE

Pos. NO.
RCA Jack Type
G:Nickel Plated
Color: GR-BL-RE:
Green-Blue-Red

RCA JACK Series

KLS1-RCA-401 R/A PCB Mount Quad 2X2 RCA Jack

Electrical Specification:

Contact resistance : 30mΩ Max
Insulation resistance : 50MΩ Min at DC 500V
Withstand voltage : AC 500V(50Hz) 1min
Operating Temperature : -25°C~+85°C

Materials:

Sealed Plate : Steel
Terminal : Brass
Outer Contact : Brass
Cover : ABS UL94V~0
Washer : PBT UL94V~0
Housing : PBT UL94V~0



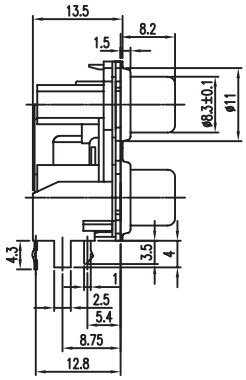

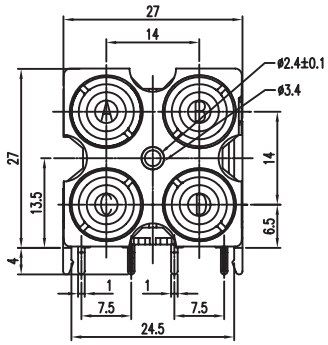

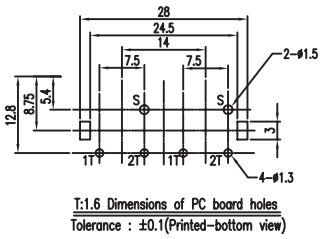

T:1.6 Dimensions of PC board holes
Tolerance : ±0.1(Printed-bottom view)

UNLESS OTHERWISE SPECIFIED, TOLERANCE ON DECIMAL: ±0.3

MODEL NO.	RCA-401
SCHEMATIC	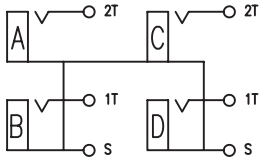

ORDER INFORMATION

Product NO.: KLS1-RCA-401-N-WH-WH-RE-RE

Pos. NO.
RCA Jack Type
G:Nickel Plated

Color :
WH-WH-RE-RE : White-White-Red-Red
RE-RE-WH-WH : Red-Red-White-White
WH-BK-RE-YE : White-Black-Red-Yellow
OR-WH-YL-RE : Orange-White-Yellow-Red

RCA JACK Series

KLS1-RCA-402 R/A PCB Mount Quad 2X2 RCA Jack

Electrical Specification:

Contact resistance : 30mΩ Max
Insulation resistance : 50MΩ Min at DC 500V
Withstand voltage : AC 500V(50Hz) 1min
Operating Temperature : -25°C~+85°C

Materials:

Barrel : Brass
Top Terminal : Brass
Bottom Terminal : Brass
Top Cover : ABS UL94V~0
Insert Ring : PBT UL94V~0
Housing : PBT UL94V~0



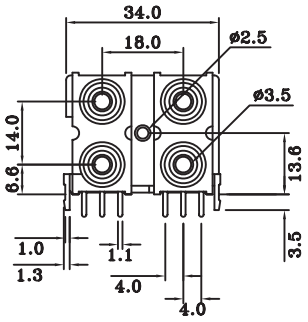

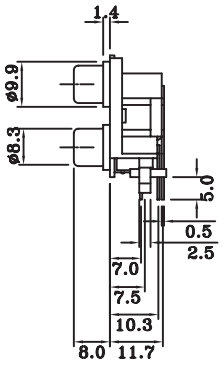

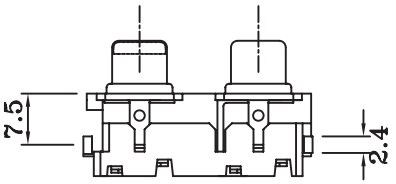

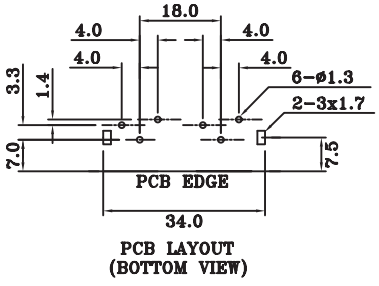

PCB LAYOUT
(BOTTOM VIEW)

MODEL NO.	RCA-402	
	TOP	BOTTOM
SCHEMATIC	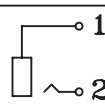	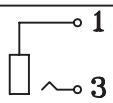

ORDER INFORMATION

Product NO.: KLS1-RCA-402-N-WH-WH-RE-RE

Pos. NO.
RCA Jack Type
G:Nickel Plated

Color :
WH-WH-RE-RE : White-White-Red-Red
RE-RE-WH-WH : Red-Red-White-White
WH-BK-RE-YE : White-Black-Red-Yellow
OR-WH-YL-RE : Orange-White-Yellow-Red

RCA JACK Series

I

KLS1-RCA-601 R/A PCB Mount 2X3 RCA Jack

Electrical Specification:

Contact resistance : 30mΩ Max
Insulation resistance : 50MΩ Min at DC 500V
Withstand voltage : AC 500V(50Hz) 1min
Operating Temperature : -25°C~+85°C

Materials:

Terminal : Brass
Outer Contact : Brass
Cover : ABS UL94V~0
Washer : PBT UL94V~0
Housing : PBT UL94V~0

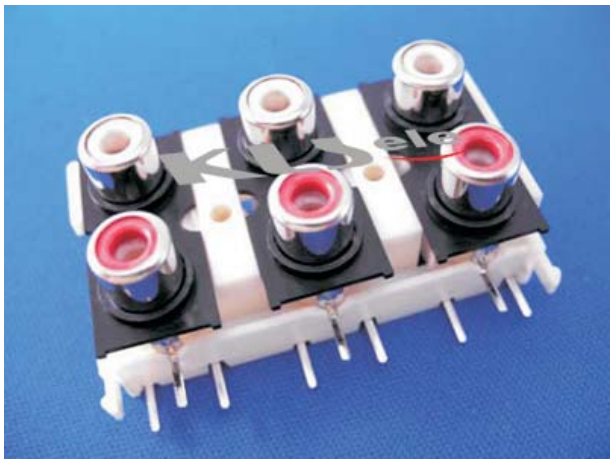

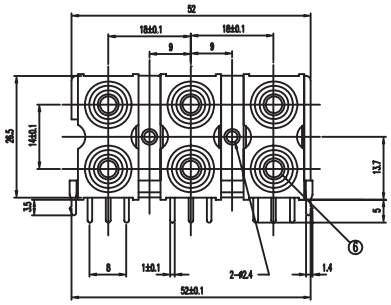

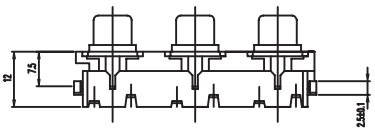

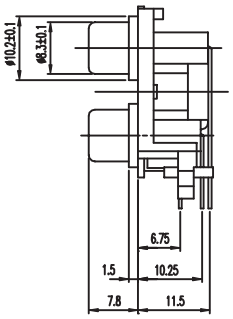

MODEL NO.	RCA-601
SCHEMATIC	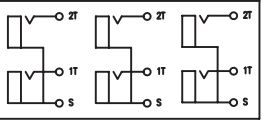

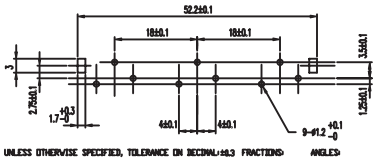

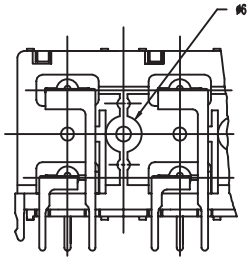

ORDER INFORMATION

Product NO.: KLS1-RCA-601-N-WH-WH-WH-RE-RE-RE

Pos. NO.
RCA Jack Type
G:Nickel Plated

Color : WH-WH-WH-RE-RE-RE :
White-White-White-Red-Red-Red

RCA JACK Series

KLS1-RCA-602 R/A PCB Mount 2X3 RCA Jack

Electrical Specification:

Contact resistance : 30mΩ Max
Insulation resistance : 50MΩ Min at DC 500V
Withstand voltage : AC 500V(50Hz) 1min
Operating Temperature : -25°C~+85°C

Materials:

Sealed Plate : Steel
Terminal : Brass
Outer Contact : Brass
Washer : PBT UL94V~0
Housing : PBT UL94V~0

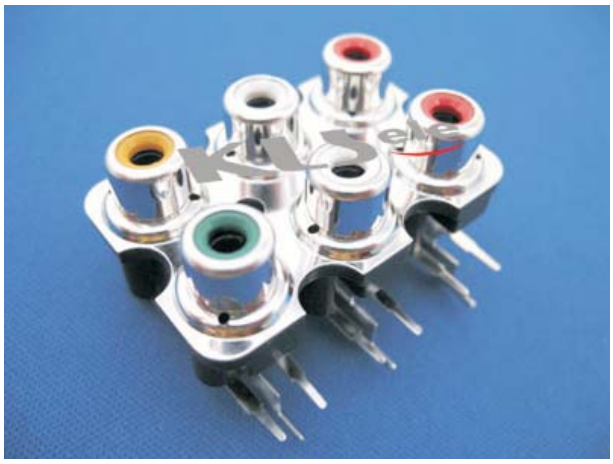

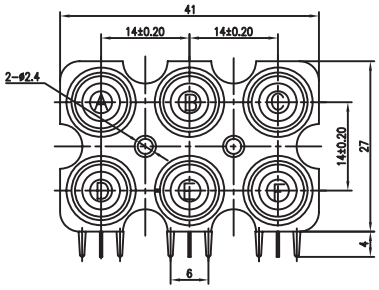

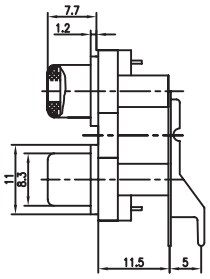

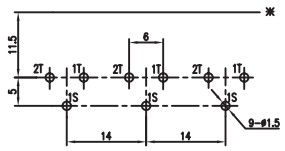

T:1.6 Dimensions of PC board holes
Tolerance : ±0.1(Printed-top view)

UNLESS OTHERWISE SPECIFIED, TOLERANCE ON DECIMAL: ±0.3

MODEL NO.	RCA-602
SCHEMATIC	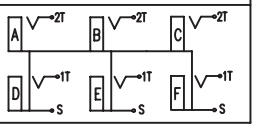

ORDER INFORMATION

Product NO.: KLS1-RCA-602-N-YE-WH-RE-GR-WH-RE

Pos. NO.
RCA Jack Type
G:Nickel Plated
Color : YE-WH-RE-GR-WH-RE :
Yellow-White-Red-Green-White-Red

XLR Plug / XLR Socket Series

KLS1-XLR-P01 (Mini XLR Plug&Socket)





GCF501/3P (3P-5P)

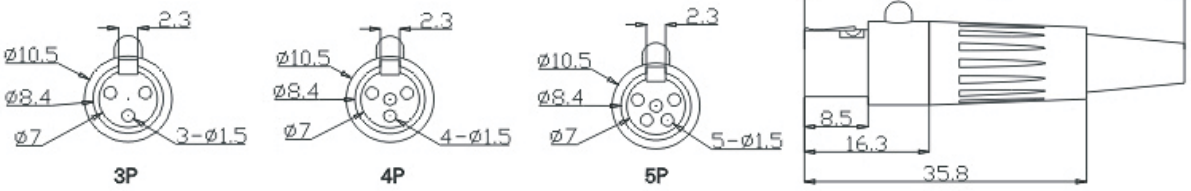

ORDER INFORMATION

Product NO. : KLS1-XLR-P01A-03-F-B

- Pos. NO.
- Part NO.
- P01A=Plug P01A Type
- 03=3 PIN Or 4Pin,5Pin
- F=Female
- B=BLACK W=White BR-Brown

XLR Plug / XLR Socket Series

KLS1-XLR-P01 (Mini XLR Plug&Socket)



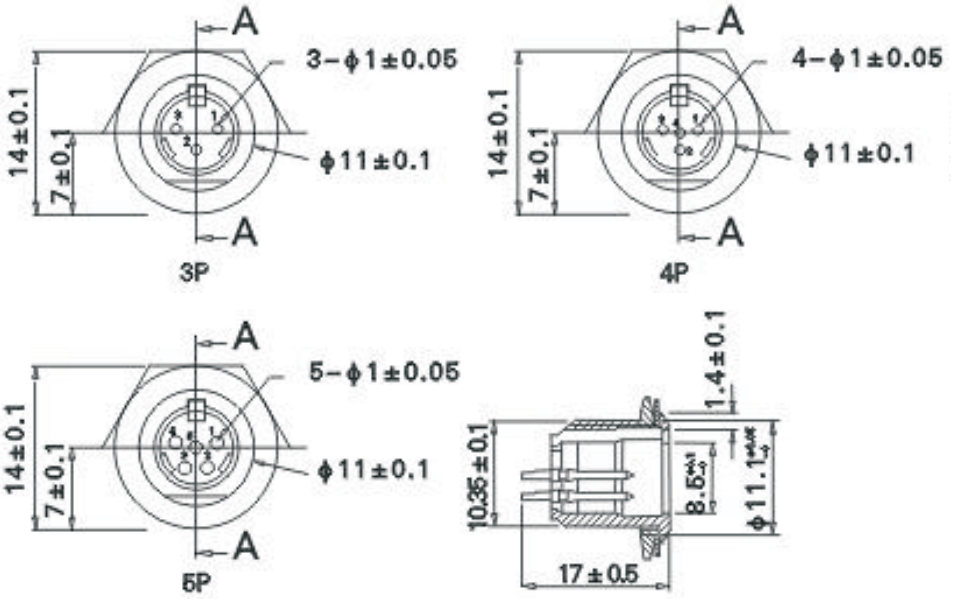

ORDER INFORMATION

Product NO. : KLS1-XLR-P01B-03

- Pos. NO.
- Part NO.
- P01B-Socket P01B Type
- 03=3 PIN Or 4Pin,5Pin

XLR Plug / XLR Socket Series

KLS1-XLR-P01 (Mini XLR Plug&Socket)



ORDER INFORMATION

Product NO. :KLS1-XLR-P01C-03-M-B

- Pos. NO.
- Part NO.
- P01C=Plug P01C Type
- 03=3 PIN
- M=Male
- B=BLACK W=White BR-Brown

XLR Plug / XLR Socket Series

KLS1-XLR-P01 (Mini XLR Plug&Socket)



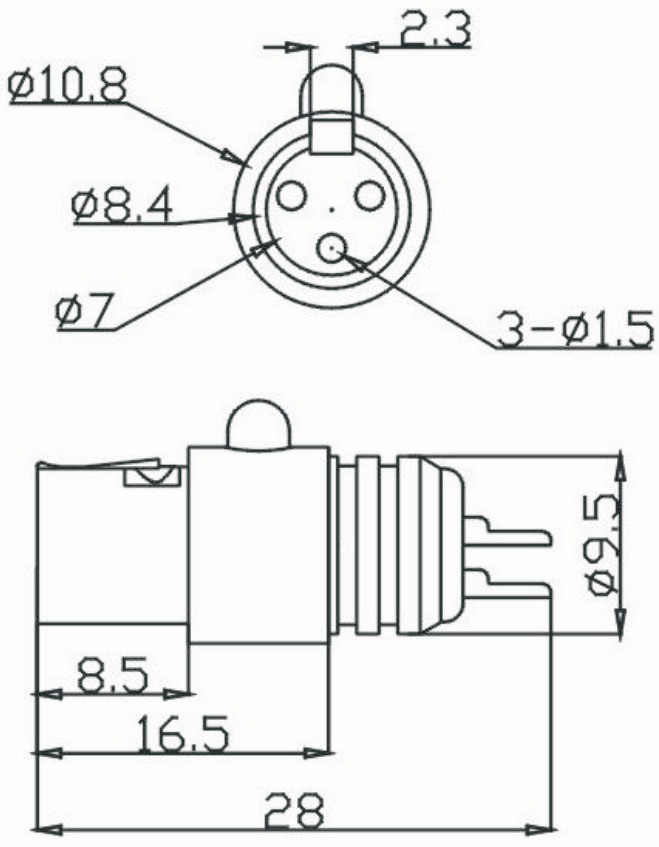

ORDER INFORMATION

Product NO. :KLS1-XLR-P01D-03

- Pos. NO.
- Part NO.
- P01D=Socket P01DType
- 03=3 PIN

XLR Plug / XLR Socket Series

KLS1-XLR-P02 (XLR Plug)



Electrical
Number of contacts: 3
Contact Resistance: ≤ 3 mOhms
Insulation Resistance:
Initial: > 2 GOhms
After Damp Heat Test: > 1 GOhms
Dielectric Strength: 1500 V dc
Rated current: 16 A
3 pole: 2.5 mm²/14 AWG
Capacitance Between Contacts
3 pole: ≤ 4 pF

Mechanical
Lifetime: >1000 cycles
Insertion / Withdrawal Force: ≤ 20 N
Cable O.D. Range: 4.0 mm - 8.0 mm
Shell: ZnAl4Cu1, gal Ni or black Cr over Cu plating
Insert: PA 6.6 30% GR (glass reinforced)
Contacts: CuSn6
Contact Surface: gal 2 µm Ag or gal 0.2 µm Au hard alloy over 2 µm Ni
Latch Lock (female): St3K32
Strain-relief Clamp: POM
Antikink Cushing: PUR

Environmental
Temperature Range: -30° C to + 80° C
Flammability: UL 94HB
Solderability: Complies with IEC 68-2-20
Compatibility / Remarks
Compatibility: IEC tentative standard

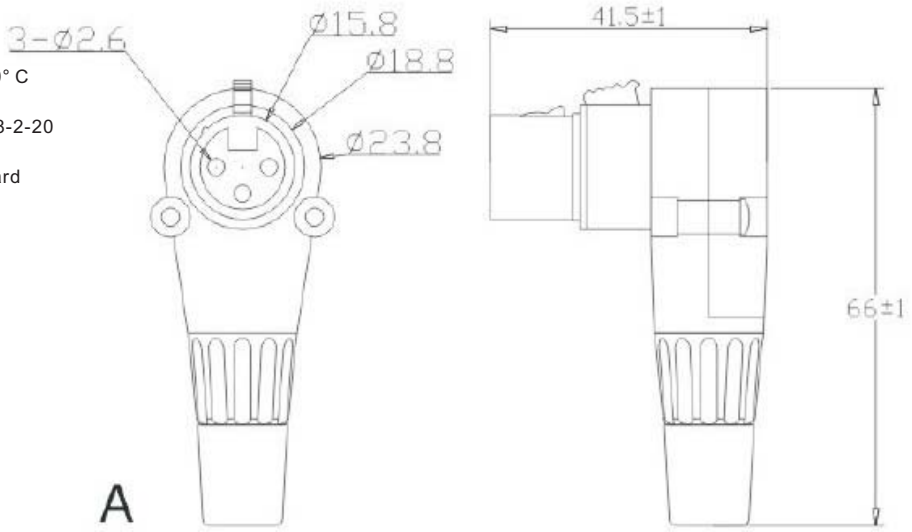

ORDER INFORMATION

Product NO. : KLS1-XLR-P02-03-F-B

Pos. NO.
Part NO.
03-No.of 3 pin
F-Female
L-Blue B-Black W-White

XLR Plug / XLR Socket Series

KLS1-XLR-P02 (XLR Plug)



Electrical
Number of contacts: 3
Contact Resistance: ≤ 3 mOhms
Insulation Resistance:
Initial: > 2 GOhms
After Damp Heat Test: > 1 GOhms
Dielectric Strength: 1500 V dc
Rated current: 16 A
3 pole: 2.5 mm²/14 AWG
Capacitance Between Contacts
3 pole: ≤ 4 pF

Mechanical
Lifetime: >1000 cycles
Insertion / Withdrawal Force: ≤ 20 N
Cable O.D. Range: 4.0 mm - 8.0 mm
Shell: ZnAl4Cu1, gal Ni or black Cr over Cu plating
Insert: PA 6.6 30% GR (glass reinforced)
Contacts: CuSn6
Contact Surface: gal 2 µm Ag or gal 0.2 µm Au hard alloy over 2 µm Ni
Latch Lock (female): St3K32
Strain-relief Clamp: POM
Antikink Cushing: PUR

Environmental
Temperature Range: -30° C to + 80° C
Flammability: UL 94HB
Solderability: Complies with IEC 68-2-20
Compatibility / Remarks
Compatibility: IEC tentative standard

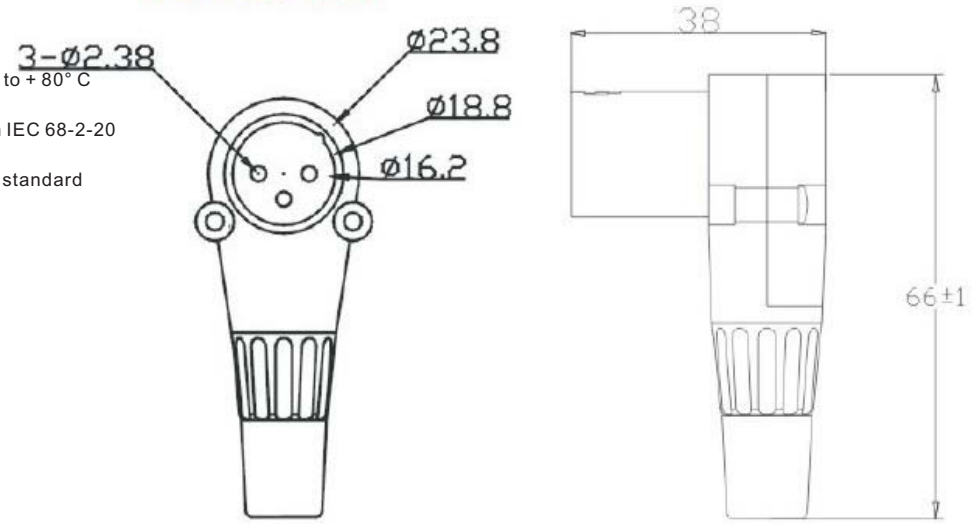

ORDER INFORMATION

Product NO. : KLS1-XLR-P02-03-M-B

Pos. NO.
Part NO.
03-No.of 3 pin
M-Male
L-Blue B-Black W-White

XLR Plug / XLR Socket Series

I

KLS1-XLR-P03 (XLR Plug)



Electrical
Number of contacts: 3
Contact Resistance: ≤ 3 mOhms
Insulation Resistance:
Initial: > 2 GOhms
After Damp Heat Test: > 1 GOhms
Dielectric Strength: 1500 V dc
Rated current: 16 A
3 pole: 2.5 mm²/14 AWG
Capacitance Between Contacts
3 pole: ≤ 4 pF

Mechanical
Lifetime: >1000 cycles
Insertion / Withdrawal Force: ≤ 20 N
Cable O.D. Range: 4.0 mm - 8.0 mm
Shell: ZnAl4Cu1, gal Ni or black Cr over Cu plating
Insert: PA 6.6 30% GR (glass reinforced)
Contacts: CuSn6
Contact Surface: gal 2 µm Ag or gal 0.2 µm Au hard alloy over 2 µm Ni
Latch Lock (female): St3K32
Strain-relief Clamp: POM
Antikink Cushing: PUR

Environmental
Temperature Range: -30° C to + 80° C
Flammability: UL 94HB
Solderability: Complies with IEC 68-2-20
Compatibility / Remarks
Compatibility: IEC tentative standard

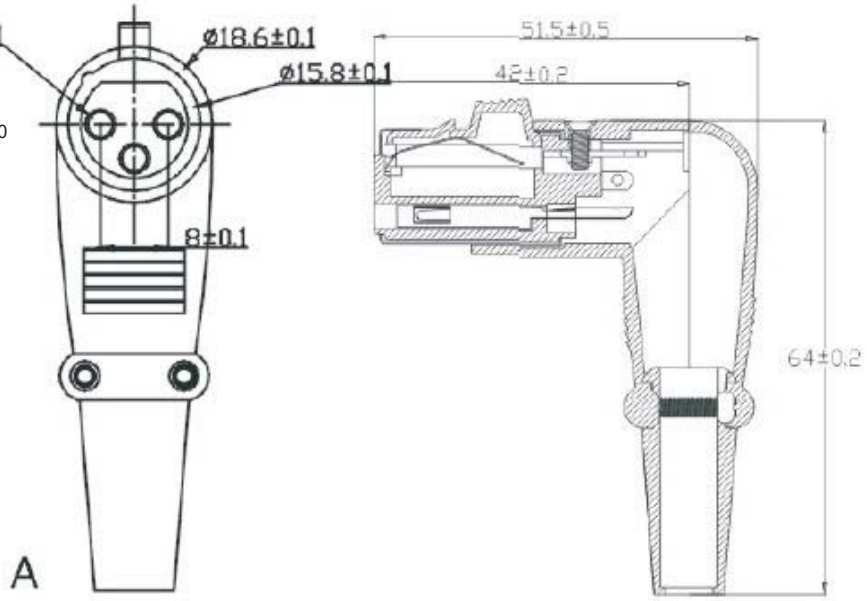

ORDER INFORMATION

Product NO. : KLS1-XLR-P03-03-F-B

Pos. NO.
Part NO.
03-No.of 03~07pin
F-Female
L-Blue B-Black W-White

XLR Plug / XLR Socket Series

KLS1-XLR-P03 (XLR Plug)



Electrical
Number of contacts: 3
Contact Resistance: ≤ 3 mOhms
Insulation Resistance:
Initial: > 2 GOhms
After Damp Heat Test: > 1 GOhms
Dielectric Strength: 1500 V dc
Rated current: 16 A
3 pole: 2.5 mm²/14 AWG
Capacitance Between Contacts
3 pole: ≤ 4 pF

Mechanical
Lifetime: >1000 cycles
Insertion / Withdrawal Force: ≤ 20 N
Cable O.D. Range: 4.0 mm - 8.0 mm
Shell: ZnAl4Cu1, gal Ni or black Cr over Cu plating
Insert: PA 6.6 30% GR (glass reinforced)
Contacts: CuSn6
Contact Surface: gal 2 µm Ag or gal 0.2 µm Au hard alloy over 2 µm Ni
Latch Lock (female): St3K32
Strain-relief Clamp: POM
Antikink Cushing: PUR

Environmental
Temperature Range: -30° C to + 80° C
Flammability: UL 94HB
Solderability: Complies with IEC 68-2-20
Compatibility / Remarks
Compatibility: IEC tentative standard

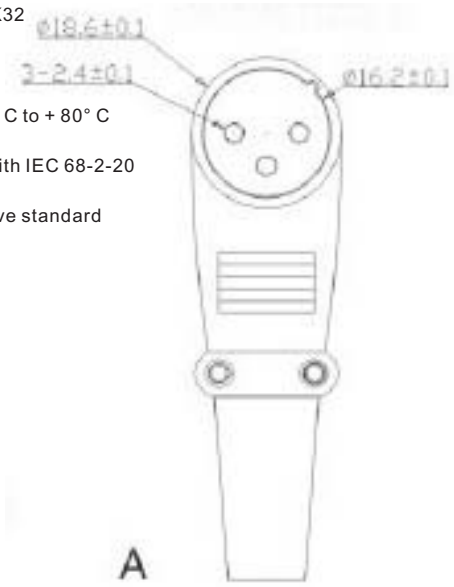

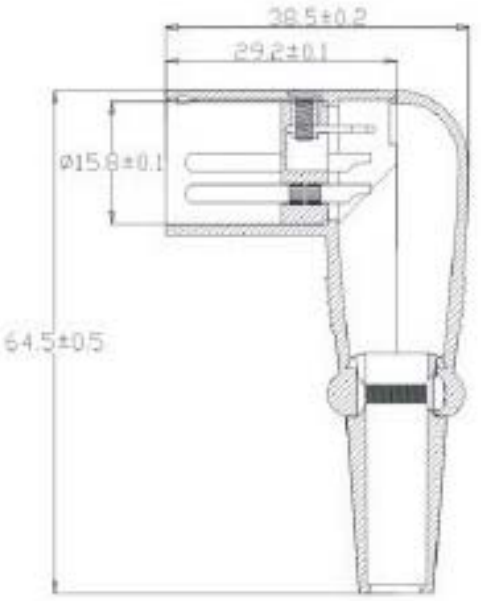

ORDER INFORMATION

Product NO. : KLS1-XLR-P03-03-M-B

Pos. NO.
Part NO.
03-No.of 3 pin
M-Male
L-Blue B-Black W-White

XLR Plug / XLR Socket Series

KLS1-XLR-P04 (XLR Plug)



Electrical
Number of contacts: 3
Contact Resistance: ≤ 3 mOhms
Insulation Resistance:
Initial: > 2 GOhms
After Damp Heat Test: > 1 GOhms
Dielectric Strength: 1500 V dc
Rated current: 16 A
3 pole: 2.5 mm²/14 AWG
Capacitance Between Contacts
3 pole: ≤ 4 pF

Mechanical
Lifetime: >1000 cycles
Insertion / Withdrawal Force: ≤ 20 N
Cable O.D. Range: 4.0 mm - 8.0 mm
Shell: ZnAl4Cu1, gal Ni or black Cr over Cu plating
Insert: PA 6.6 30% GR (glass reinforced)
Contacts: CuSn6
Contact Surface: gal 2 µm Ag or gal 0.2 µm Au hard alloy over 2 µm Ni
Latch Lock (female): St3K32
Strain-relief Clamp: POM
Antikink Cushing: PUR

Environmental
Temperature Range: -30° C to + 80° C
Flammability: UL 94HB
Solderability: Complies with IEC 68-2-20
Compatibility / Remarks
Compatibility: IEC tentative standard



Order Information
KLS1-XLR-003-X-X
XX-No.of 3pin~5pin
X:E,B,W,P,U,G,Y,O,R color

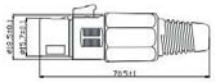





Order Information
KLS1-XLR-004-X-X
XX-No.of 3pin~5pin
X:E,B,W,P,U,G,Y,O,R color

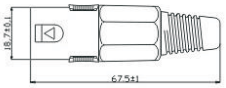



ORDER INFORMATION

Product NO. : KLS1-XLR-P04-03-F-B

Pos. NO.
Part NO.
03-No.of 03~07pin
M-Male F-Female
R-Red B-Black W-White

XLR Plug / XLR Socket Series

KLS1-XLR-P05 (XLR Plug)



Electrical
Number of contacts: 3
Contact Resistance: ≤ 3 mOhms
Insulation Resistance:
Initial: > 2 GOhms
After Damp Heat Test: > 1 GOhms
Dielectric Strength: 1500 V dc
Rated current: 16 A
3 pole: 2.5 mm²/14 AWG
Capacitance Between Contacts
3 pole: ≤ 4 pF

Environmental
Temperature Range: -30° C to + 80° C
Flammability: UL 94HB
Solderability: Complies with IEC 68-2-20
Compatibility / Remarks
Compatibility: IEC tentative standard

Mechanical
Lifetime: >1000 cycles
Insertion / Withdrawal Force: ≤ 20 N
Cable O.D. Range: 4.0 mm - 8.0 mm
Shell: ZnAl4Cu1, gal Ni or black Cr over Cu plating
Insert: PA 6.6 30% GR (glass reinforced)
Contacts: CuSn6
Contact Surface: gal 2 µm Ag or gal 0.2 µm Au hard alloy over 2 µm Ni
Latch Lock (female): St3K32
Strain-relief Clamp: POM
Antikink Cushing: PUR

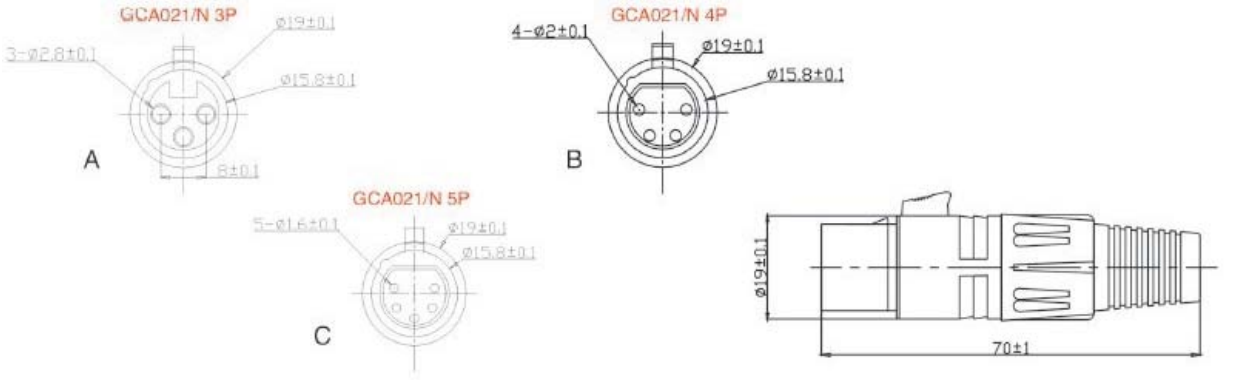

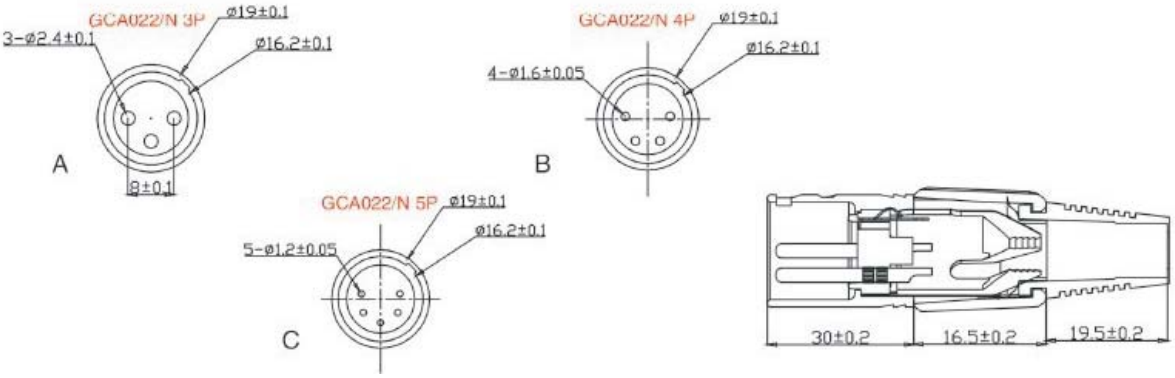

ORDER INFORMATION

Product NO. : KLS1-XLR-P05-03-F-B

Pos. NO.
Part NO.
03-No.of 03~07pin
M-Male F-Female
R-Red B-Black W-White

XLR Plug / XLR Socket Series

KLS1-XLR-P06 (XLR Plug)



Electrical
Number of contacts: 3
Contact Resistance: ≤ 3 mOhms
Insulation Resistance:
Initial: > 2 GOhms
After Damp Heat Test: > 1 GOhms
Dielectric Strength: 1500 V dc
Rated current: 16 A
3 pole: 2.5 mm²/14 AWG
Capacitance Between Contacts
3 pole: ≤ 4 pF

Environmental
Temperature Range: -30° C to + 80° C
Flammability: UL 94HB
Solderability: Complies with IEC 68-2-20
Compatibility / Remarks
Compatibility: IEC tentative standard

Mechanical
Lifetime: >1000 cycles
Insertion / Withdrawal Force: ≤ 20 N
Cable O.D. Range: 4.0 mm - 8.0 mm
Shell: ZnAl4Cu1, gal Ni or black Cr over Cu plating
Insert: PA 6.6 30% GR (glass reinforced)
Contacts: CuSn6
Contact Surface: gal 2 µm Ag or gal 0.2 µm Au hard alloy over 2 µm Ni
Latch Lock (female): St3K32
Strain-relief Clamp: POM
Antikink Cushing: PUR

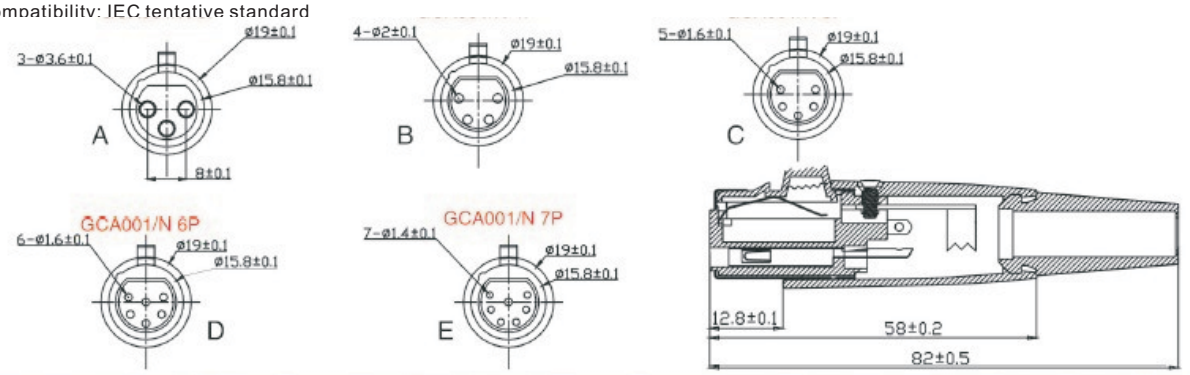

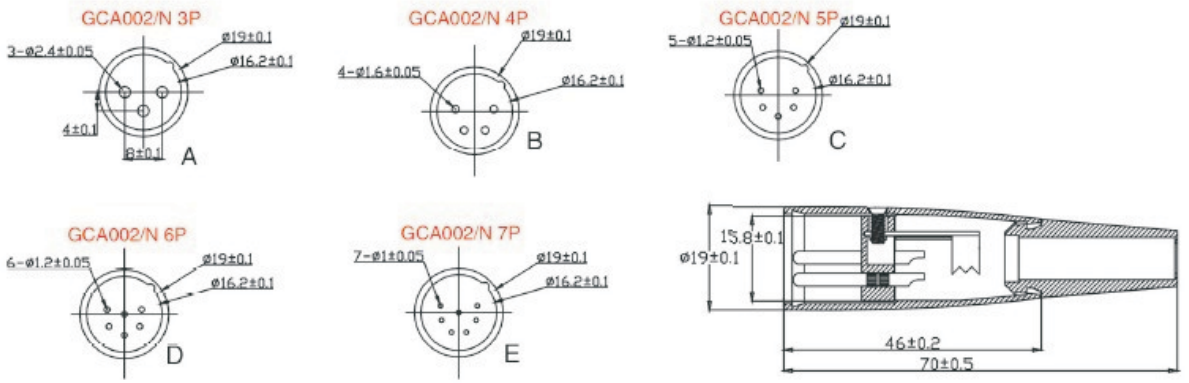

ORDER INFORMATION

Product NO. : KLS1-XLR-P06-03-F-B

Pos. NO.
Part NO.
03-No.of 03~07pin
M-Male F-Female
R-Red B-Black W-White

XLR Plug / XLR Socket Series

KLS1-XLR-P07 (XLR Plug)

Electrical
Number of contacts: 3
Contact Resistance: ≤ 3 mOhms
Insulation Resistance:
Initial: > 2 GOhms
After Damp Heat Test: > 1 GOhms
Dielectric Strength: 1500 V dc
Rated current: 16 A
3 pole: 2.5 mm²/14 AWG
Capacitance Between Contacts
3 pole: ≤ 4 pF

Environmental
Temperature Range: -30° C to + 80° C
Flammability: UL 94HB
Solderability: Complies with IEC 68-2-20
Compatibility / Remarks
Compatibility: IEC tentative standard

Mechanical
Lifetime: >1000 cycles
Insertion / Withdrawal Force: ≤ 20 N
Cable O.D. Range: 4.0 mm - 8.0 mm
Shell: ZnAl4Cu1, gal Ni or black Cr over Cu plating
Insert: PA 6.6 30% GR (glass reinforced)
Contacts: CuSn6
Contact Surface: gal 2 µm Ag or gal 0.2 µm Au hard alloy over 2 µm Ni
Latch Lock (female): St3K32
Strain-relief Clamp: POM
Antikink Cushing: PUR



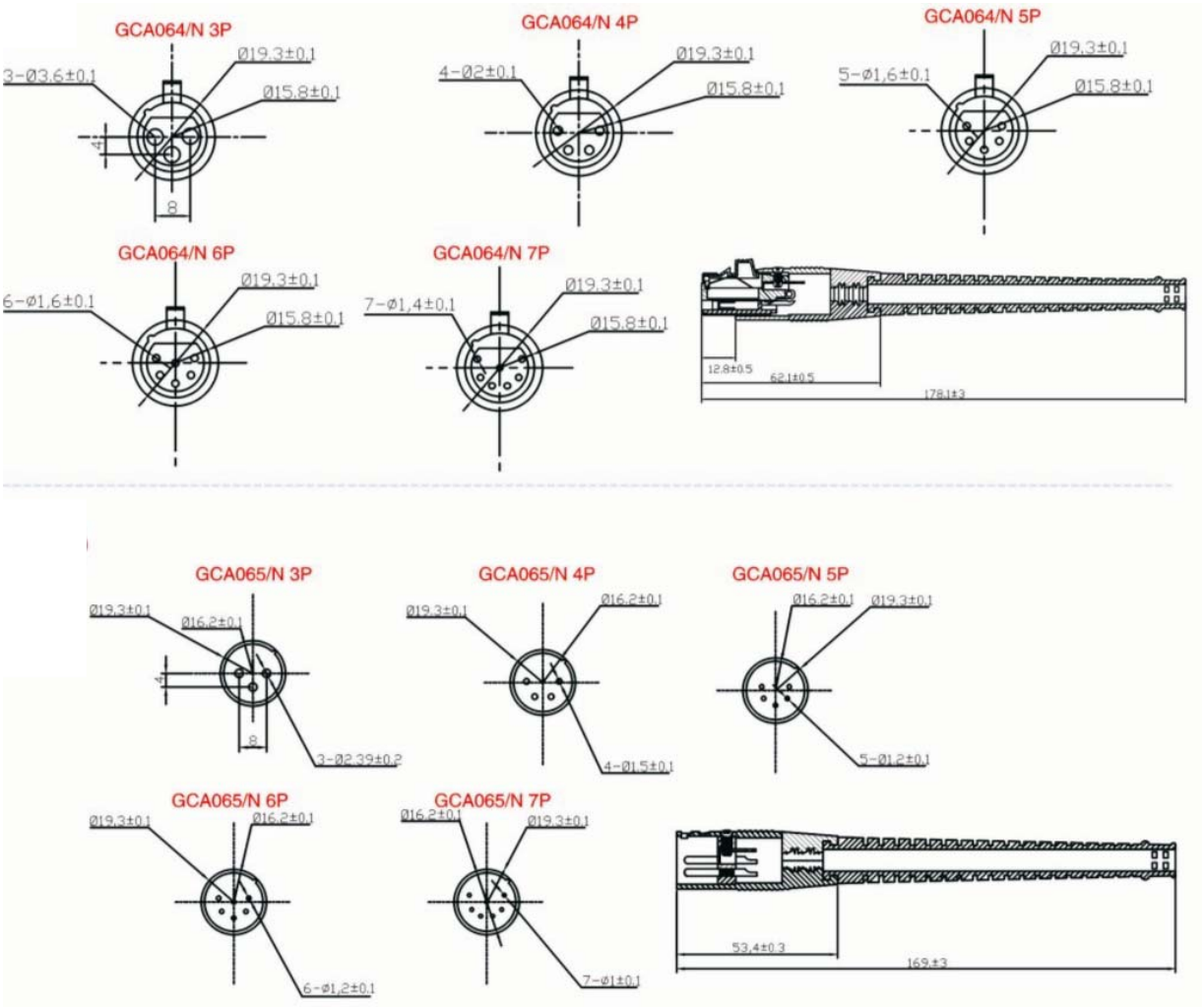

XLR Plug / XLR Socket Series

KLS1-XLR-P07 (XLR Plug)



KLS1-XLR-P07-03-M-T1



GCA015/N 3P

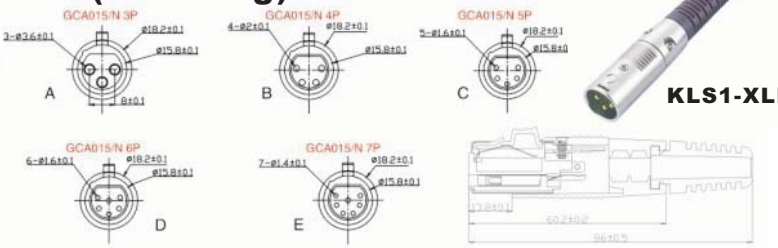



GCA016/N 3P

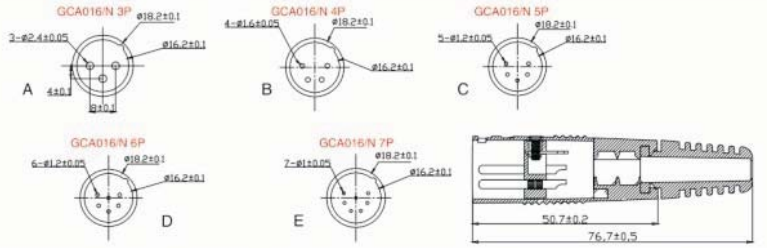



GCA066 /N 3P

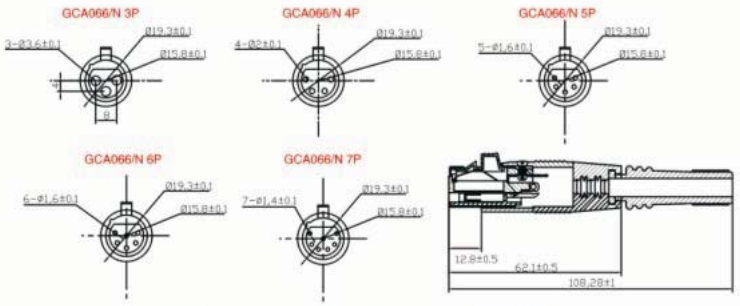



GCA067 /N 3P

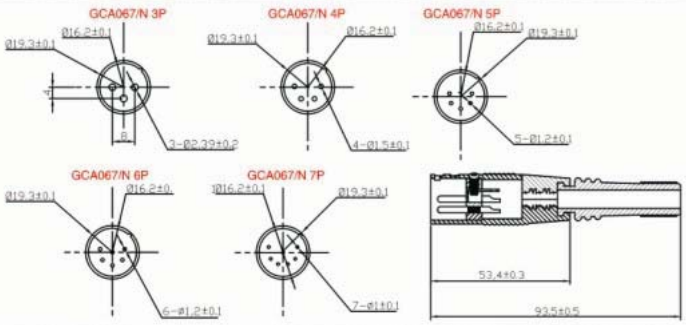

ORDER INFORMATION

Product NO. : KLS1-XLR-P07-03-F-B-T1

- Pos. NO.
- Part NO.
- 03-No.of 03~07pin
- M-Male F-Female
- R-Red B-Black W-White
- T1=116mm Tail Type T2=45mm Tail Type T3=26mm Tail Type

XLR Plug / XLR Socket Series

KLS1-XLR-P08 (XLR Plug)



Electrical
Number of contacts: 3
Contact Resistance: ≤ 3 mOhms
Insulation Resistance:
Initial: > 2 GOhms
After Damp Heat Test: > 1 GOhms
Dielectric Strength: 1500 V dc
Rated current: 16 A
3 pole: 2.5 mm²/14 AWG
Capacitance Between Contacts
3 pole: ≤ 4 pF

Mechanical
Lifetime: >1000 cycles
Insertion / Withdrawal Force: ≤ 20 N
Cable O.D. Range: 4.0 mm - 8.0 mm
Shell: ZnAl4Cu1, gal Ni or black Cr over Cu plating
Insert: PA 6.6 30% GR (glass reinforced)
Contacts: CuSn6
Contact Surface: gal 2 µm Ag or gal 0.2 µm Au hard alloy over 2 µm Ni
Latch Lock (female): St3K32
Strain-relief Clamp: POM
Antikink Cushing: PUR

Environmental
Temperature Range: -30° C to + 80° C
Flammability: UL 94HB
Solderability: Complies with IEC 68-2-20
Compatibility / Remarks
Compatibility: IEC tentative standard

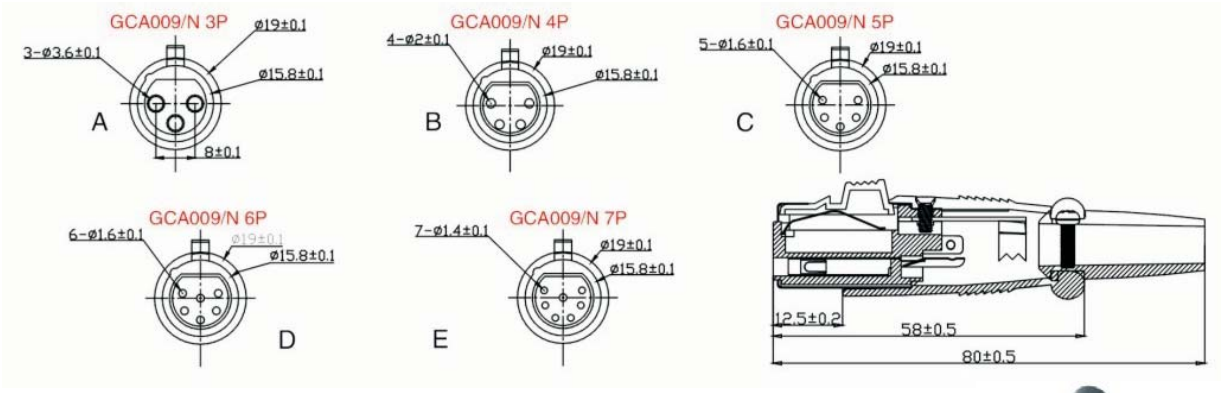



ORDER INFORMATION

Product NO. : KLS1-XLR-P08-03-F-B

Pos. NO.
Part NO.
03-No.of 03~07pin
M-Male F-Female
R-Red B-Black W-White

XLR Plug / XLR Socket Series

KLS1-XLR-P09 (XLR Plug)



Electrical
Number of contacts: 3
Contact Resistance: ≤ 3 mOhms
Insulation Resistance:
Initial: > 2 GOhms
After Damp Heat Test: > 1 GOhms
Dielectric Strength: 1500 V dc
Rated current: 16 A
3 pole: 2.5 mm²/14 AWG
Capacitance Between Contacts
3 pole: ≤ 4 pF

Mechanical
Lifetime: >1000 cycles
Insertion / Withdrawal Force: ≤ 20 N
Cable O.D. Range: 4.0 mm - 8.0 mm
Shell: ZnAl4Cu1, gal Ni or black Cr over Cu plating
Insert: PA 6.6 30% GR (glass reinforced)
Contacts: CuSn6
Contact Surface: gal 2 µm Ag or gal 0.2 µm Au hard alloy over 2 µm Ni
Latch Lock (female): St3K32
Strain-relief Clamp: POM
Antikink Cushing: PUR

Environmental
Temperature Range: -30° C to + 80° C
Flammability: UL 94HB
Solderability: Complies with IEC 68-2-20
Compatibility / Remarks
Compatibility: IEC tentative standard

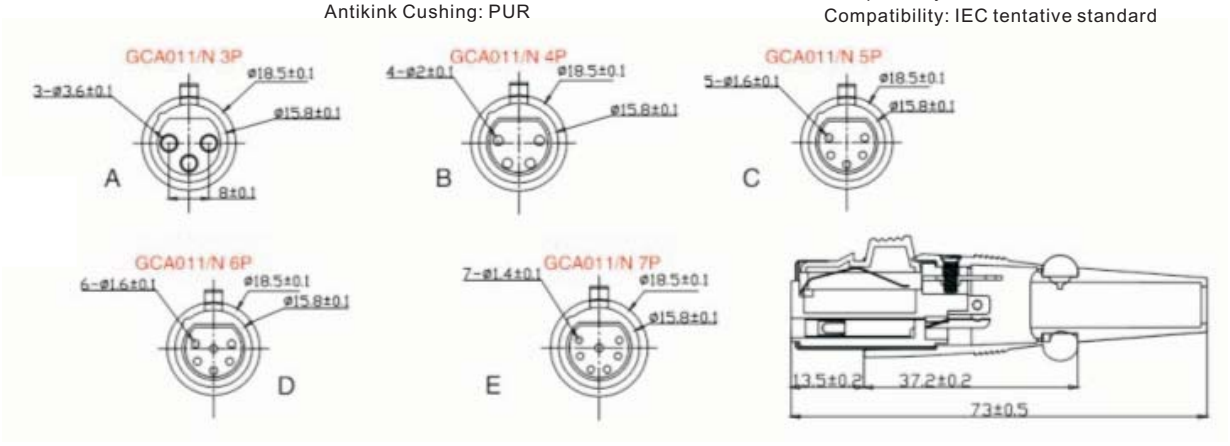

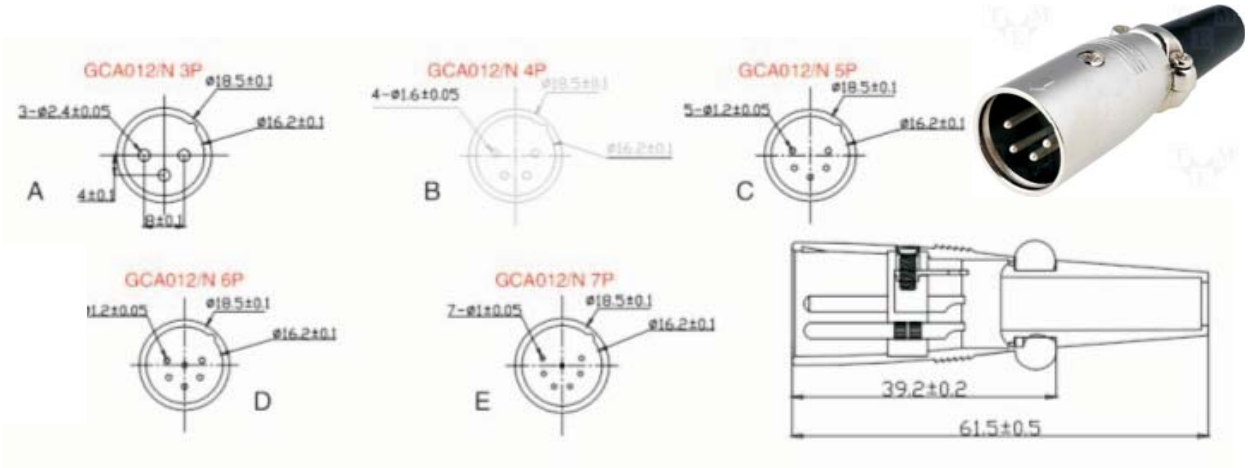

ORDER INFORMATION

Product NO. : KLS1-XLR-P09-03-F-B

Pos. NO.
Part NO.
03-No.of 03~07pin
M-Male F-Female
R-Red B-Black W-White

XLR Plug / XLR Socket Series

KLS1-XLR-P10 (XLR Plug)



Electrical
Number of contacts: 3
Contact Resistance: ≤ 3 mOhms
Insulation Resistance:
Initial: > 2 GOhms
After Damp Heat Test: > 1 GOhms
Dielectric Strength: 1500 V dc
Rated current: 16 A
3 pole: 2.5 mm²/14 AWG
Capacitance Between Contacts
3 pole: ≤ 4 pF

Mechanical
Lifetime: >1000 cycles
Insertion / Withdrawal Force: ≤ 20 N
Cable O.D. Range: 4.0 mm - 8.0 mm
Shell: ZnAl4Cu1, gal Ni or black Cr over Cu plating
Insert: PA 6.6 30% GR (glass reinforced)
Contacts: CuSn6
Contact Surface: gal 2 µm Ag or gal 0.2 µm Au hard alloy over 2 µm Ni
Latch Lock (female): St3K32
Strain-relief Clamp: POM
Antikink Cushing: PUR

Environmental
Temperature Range: -30° C to + 80° C
Flammability: UL 94HB
Solderability: Complies with IEC 68-2-20
Compatibility / Remarks
Compatibility: IEC tentative standard

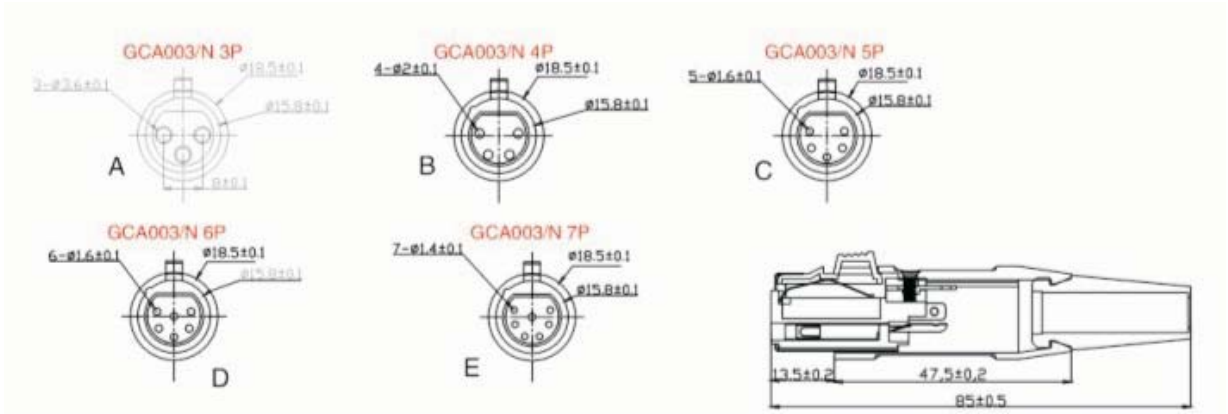

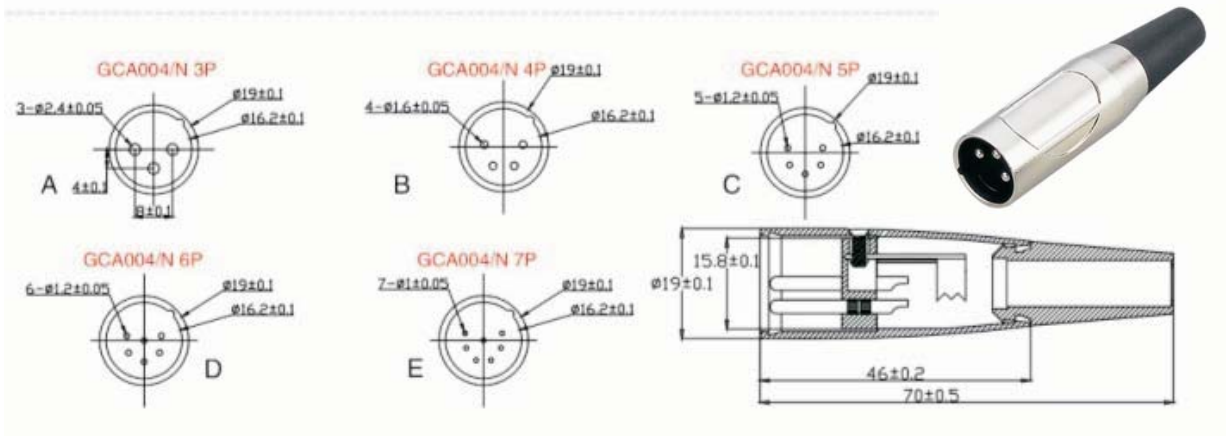

ORDER INFORMATION

Product NO. : KLS1-XLR-P10-03-F-B

Pos. NO.
Part NO.
03-No.of 03~07pin
M-Male F-Female
R-Red B-Black W-White

XLR Plug / XLR Socket Series

KLS1-XLR-P11 (XLR Plug)



Electrical
Number of contacts: 3
Contact Resistance: ≤ 3 mOhms
Insulation Resistance:
Initial: > 2 GOhms
After Damp Heat Test: > 1 GOhms
Dielectric Strength: 1500 V dc
Rated current: 16 A
3 pole: 2.5 mm²/14 AWG
Capacitance Between Contacts
3 pole: ≤ 4 pF

Mechanical
Lifetime: >1000 cycles
Insertion / Withdrawal Force: ≤ 20 N
Cable O.D. Range: 4.0 mm - 8.0 mm
Shell: ZnAl4Cu1, gal Ni or black Cr over Cu plating
Insert: PA 6.6 30% GR (glass reinforced)
Contacts: CuSn6
Contact Surface: gal 2 µm Ag or gal 0.2 µm Au hard alloy over 2 µm Ni
Latch Lock (female): St3K32
Strain-relief Clamp: POM
Antikink Cushing: PUR

Environmental
Temperature Range: -30° C to + 80° C
Flammability: UL 94HB
Solderability: Complies with IEC 68-2-20
Compatibility / Remarks
Compatibility: IEC tentative standard

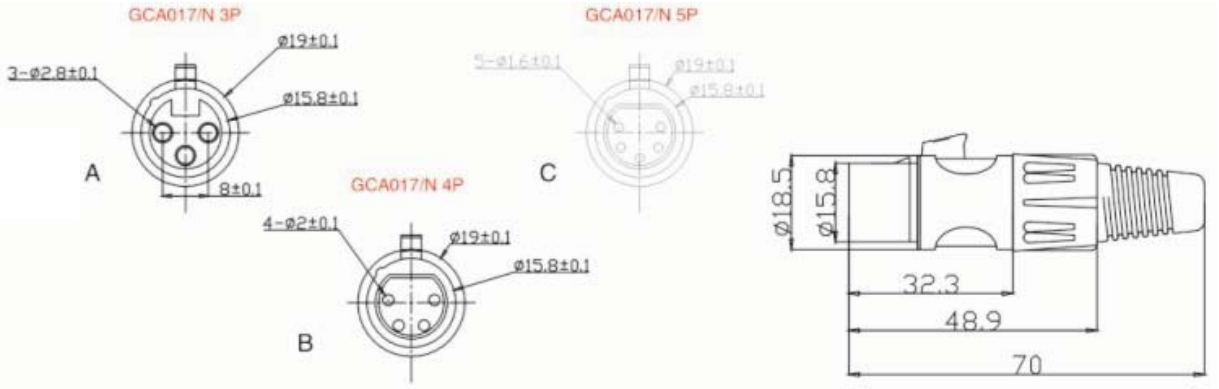

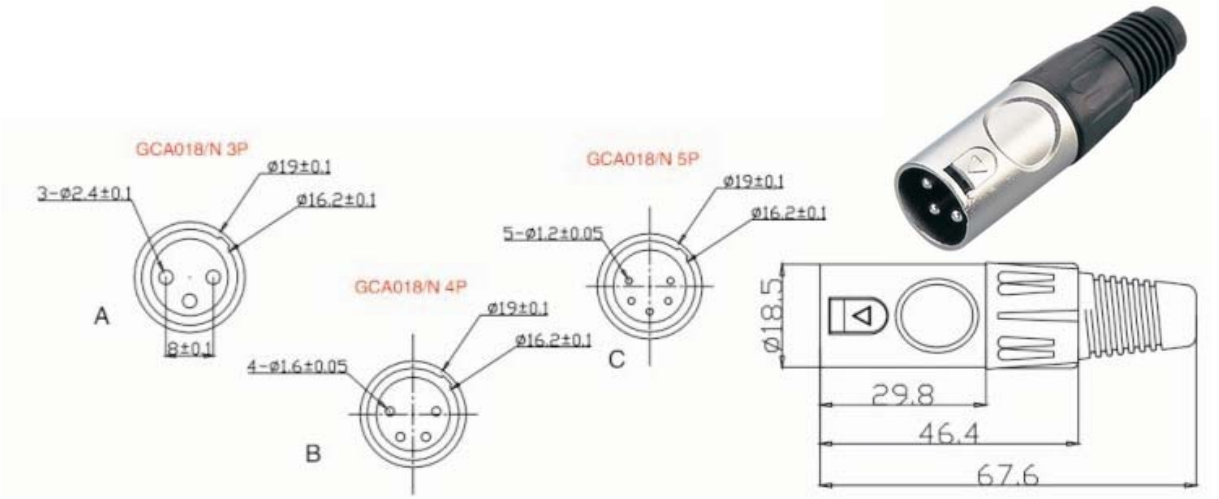

ORDER INFORMATION

Product NO. : KLS1-XLR-P11-03-F-B

Pos. NO.
Part NO.
03-No.of 03~07pin
M-Male F-Female
R-Red B-Black W-White

XLR Plug / XLR Socket Series

KLS1-XLR-P12 (XLR Plug)

Electrical
Number of contacts: 3
Contact Resistance: ≤ 3 mOhms
Insulation Resistance:
Initial: > 2 GOhms
After Damp Heat Test: > 1 GOhms
Dielectric Strength: 1500 V dc
Rated current: 16 A
3 pole: 2.5 mm²/14 AWG
Capacitance Between Contacts
3 pole: ≤ 4 pF

Mechanical
Lifetime: >1000 cycles
Insertion / Withdrawal Force: ≤ 20 N
Cable O.D. Range: 4.0 mm - 8.0 mm
Shell: ZnAl4Cu1, gal Ni or black Cr over Cu plating
Insert: PA 6.6 30% GR (glass reinforced)
Contacts: CuSn6
Contact Surface: gal 2 µm Ag or gal 0.2 µm Au hard alloy over 2 µm Ni
Latch Lock (female): St3K32
Strain-relief Clamp: POM

Environmental
Temperature Range: -30° C to + 80° C
Flammability: UL 94HB
Solderability: Complies with IEC 68-2-20
Compatibility / Remarks

Compatibility: IEC tentative standard



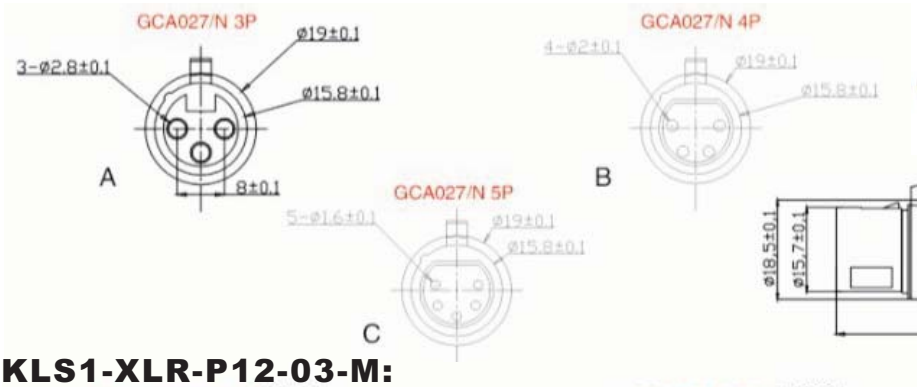

KLS1-XLR-P12-03-M:

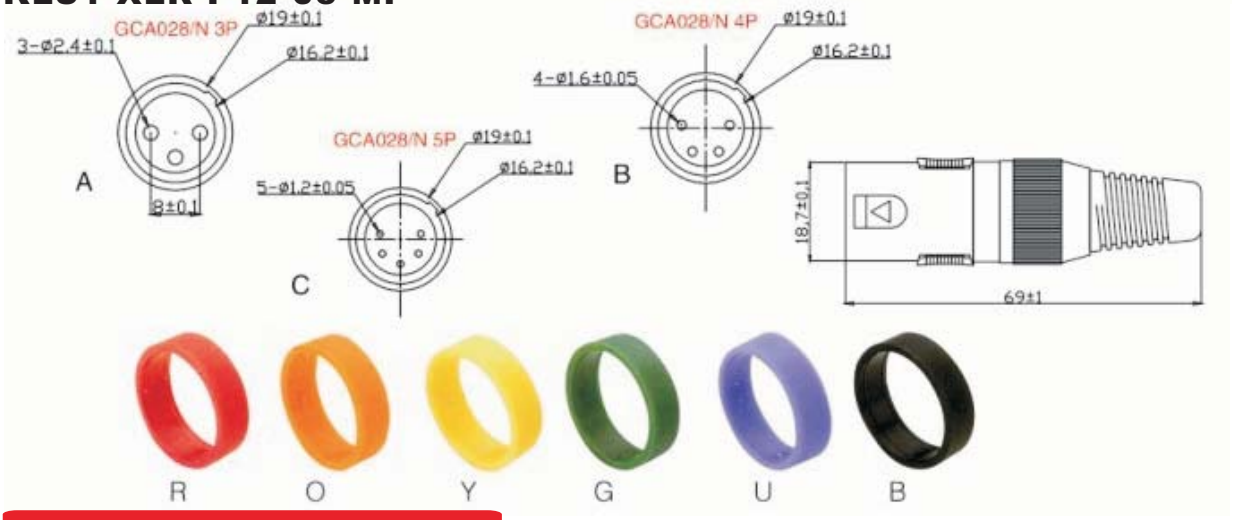

ORDER INFORMATION

Product NO. : KLS1-XLR-P12-03-F-B

Pos. NO.
Part NO.
03-No.of 03~07pin
M-Male F-Female
R-Red B-Black W-White

XLR Plug / XLR Socket Series

KLS1-XLR-P13 (XLR Plug)

Electrical
Number of contacts: 3
Contact Resistance: ≤ 3 mOhms
Insulation Resistance:
Initial: > 2 GOhms
After Damp Heat Test: > 1 GOhms
Dielectric Strength: 1500 V dc
Rated current: 16 A
3 pole: 2.5 mm²/14 AWG
Capacitance Between Contacts
3 pole: ≤ 4 pF

Mechanical
Lifetime: >1000 cycles
Insertion / Withdrawal Force: ≤ 20 N
Cable O.D. Range: 4.0 mm - 8.0 mm
Shell: ZnAl4Cu1, gal Ni or black Cr over Cu plating
Insert: PA 6.6 30% GR (glass reinforced)
Contacts: CuSn6
Contact Surface: gal 2 µm Ag or gal 0.2 µm Au hard alloy over 2 µm Ni
Latch Lock (female): St3K32
Strain-relief Clamp: POM
Antikink Cushing: PUR

Environmental
Temperature Range: -30° C to + 80° C
Flammability: UL 94HB
Solderability: Complies with IEC 68-2-20
Compatibility / Remarks

Compatibility: IEC tentative standard



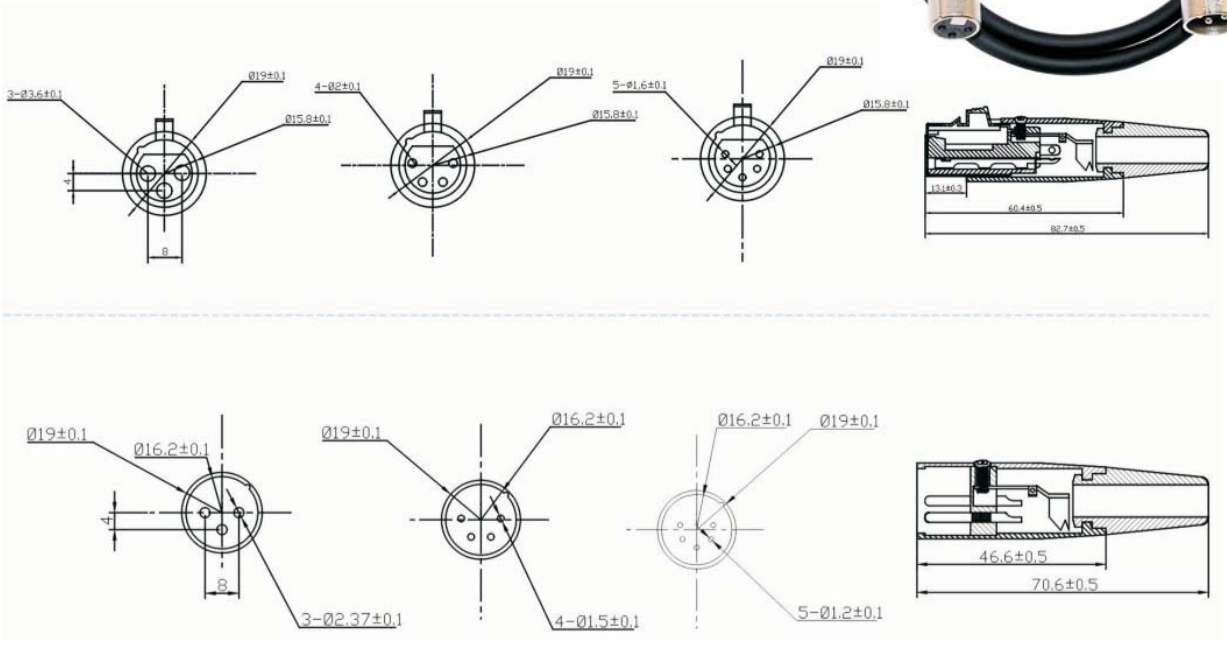

ORDER INFORMATION

Product NO. : KLS1-XLR-P13-03-F-B

Pos. NO.
Part NO.
03-No.of 03~07pin
M-Male F-Female
R-Red B-Black W-White

XLR Plug / XLR Socket Series

KLS1-XLR-P14 (XLR Plug)

Electrical
Number of contacts: 3
Contact Resistance: ≤ 3 mOhms
Insulation Resistance:
Initial: > 2 GOhms
After Damp Heat Test: > 1 GOhms
Dielectric Strength: 1500 V dc
Rated current: 16 A
3 pole: 2.5 mm²/14 AWG
Capacitance Between Contacts
3 pole: ≤ 4 pF

Mechanical
Lifetime: >1000 cycles
Insertion / Withdrawal Force: ≤ 20 N
Cable O.D. Range: 4.0 mm - 8.0 mm
Shell: ZnAl4Cu1, gal Ni or black Cr over Cu plating
Insert: PA 6.6 30% GR (glass reinforced)
Contacts: CuSn6
Contact Surface: gal 2 µm Ag or gal 0.2 µm Au hard alloy over 2 µm Ni
Latch Lock (female): St3K32
Strain-relief Clamp: POM
Antikink Cushing: PUR

Environmental
Temperature Range: -30° C to + 80° C
Flammability: UL 94HB
Solderability: Complies with IEC 68-2-20
Compatibility / Remarks

Compatibility: IEC tentative standard



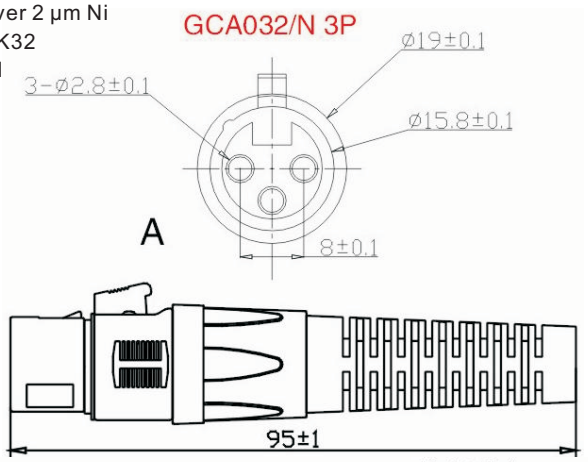



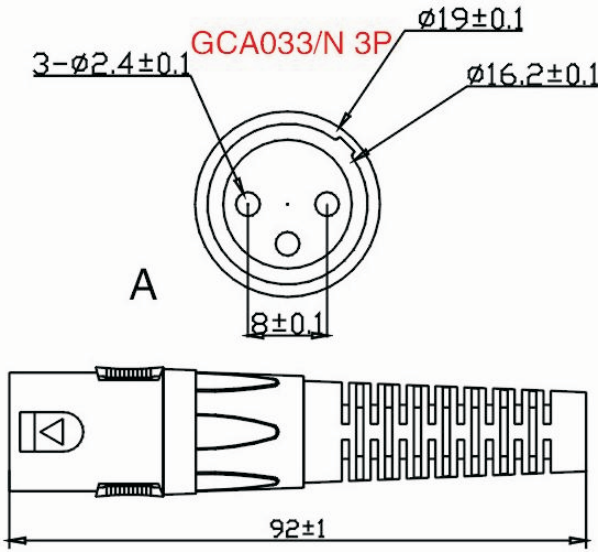

KLS1-XLR-P14-03-M:

ORDER INFORMATION

Product NO. : KLS1-XLR-P14-03-F-B

Pos. NO.
Part NO.
03-No.of 03~07pin
M-Male F-Female
R-Red B-Black W-White

XLR Plug / XLR Socket Series

KLS1-XLR-P15 (XLR Plug)

Electrical
Number of contacts: 3
Contact Resistance: ≤ 3 mOhms
Insulation Resistance:
Initial: > 2 GOhms
After Damp Heat Test: > 1 GOhms
Dielectric Strength: 1500 V dc
Rated current: 16 A
3 pole: 2.5 mm²/14 AWG
Capacitance Between Contacts
3 pole: ≤ 4 pF

Mechanical
Lifetime: >1000 cycles
Insertion / Withdrawal Force: ≤ 20 N
Cable O.D. Range: 4.0 mm - 8.0 mm
Shell: ZnAl4Cu1, gal Ni or black Cr over Cu plating
Insert: PA 6.6 30% GR (glass reinforced)
Contacts: CuSn6
Contact Surface: gal 2 µm Ag or gal 0.2 µm Au hard alloy over 2 µm Ni
Latch Lock (female): St3K32
Strain-relief Clamp: POM
Antikink Cushing: PUR

Environmental
Temperature Range: -30° C to + 80° C
Flammability: UL 94HB
Solderability: Complies with IEC 68-2-20
Compatibility / Remarks

Compatibility: IEC tentative standard



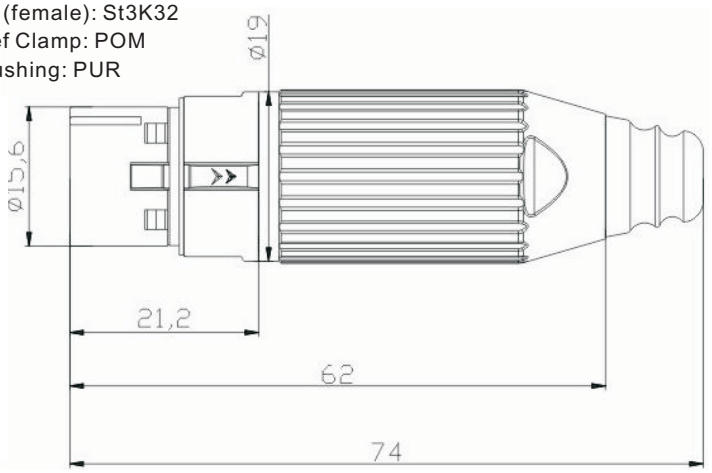



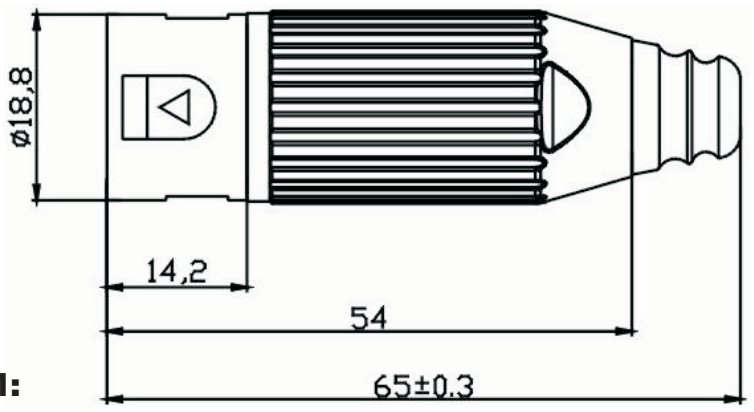

KLS1-XLR-P15-03-M:

ORDER INFORMATION

Product NO. : KLS1-XLR-P15-03-F-B

Pos. NO.
Part NO.
03-No.of 03~07pin
M-Male F-Female
R-Red B-Black W-White

XLR Plug / XLR Socket Series

KLS1-XLR-S01 (XLR Socket)



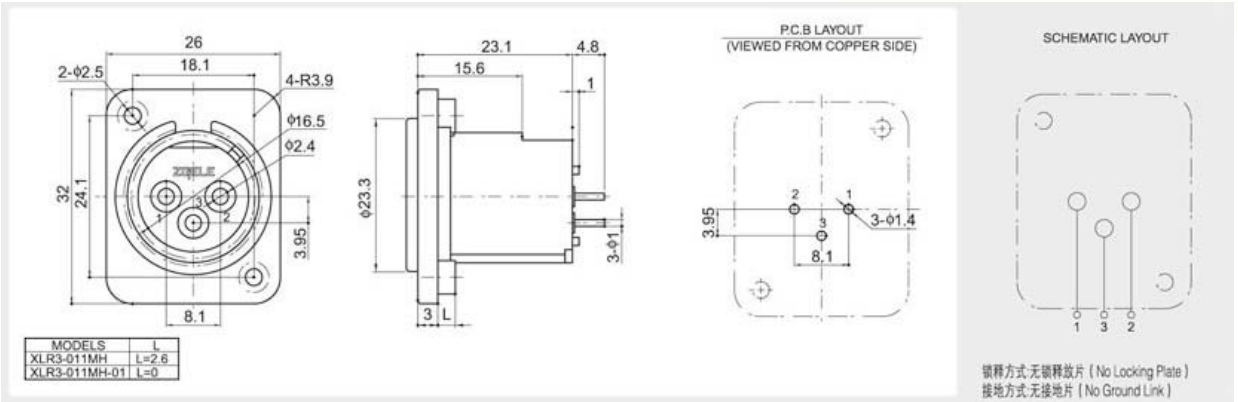

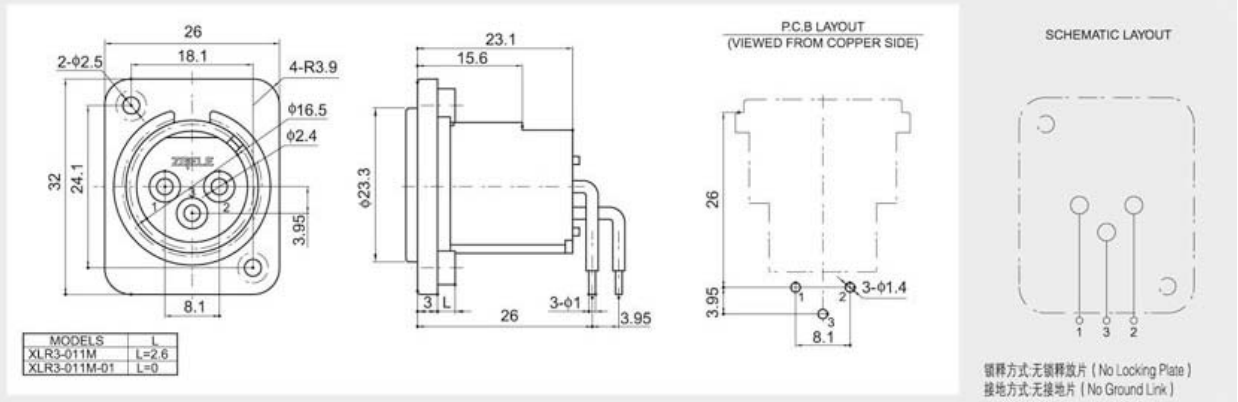



ORDER INFORMATION

Product NO. : KLS1-XLR-S01-03-M-S-L2.6

- Pos. NO.
- Part NO.
- 03-No.of 03~07pin
- M-Male F-Female
- S=Dip Straight Pin R=Dip Right Pin

XLR Plug / XLR Socket Series

KLS1-XLR-S02 (XLR Socket)



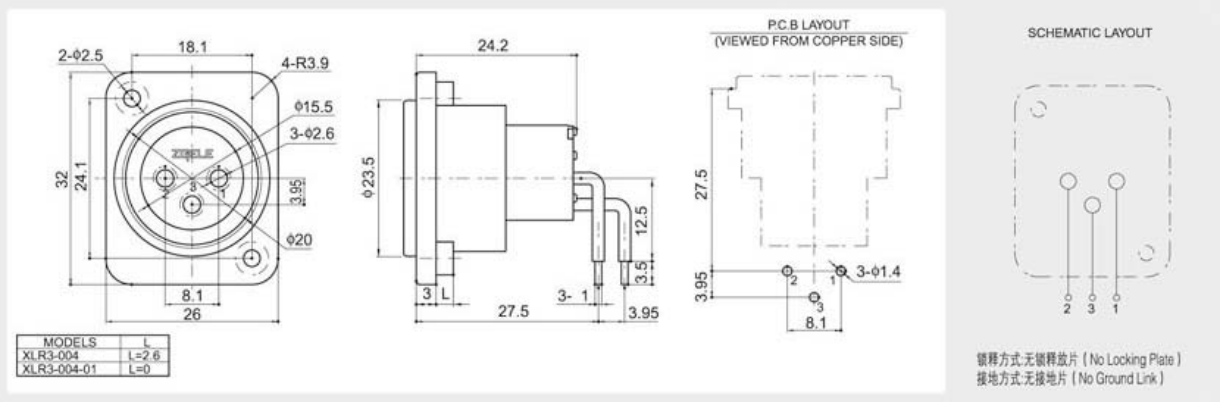

MODELS	L
XLR3-004	L=2.6
XLR3-004-01	L=0

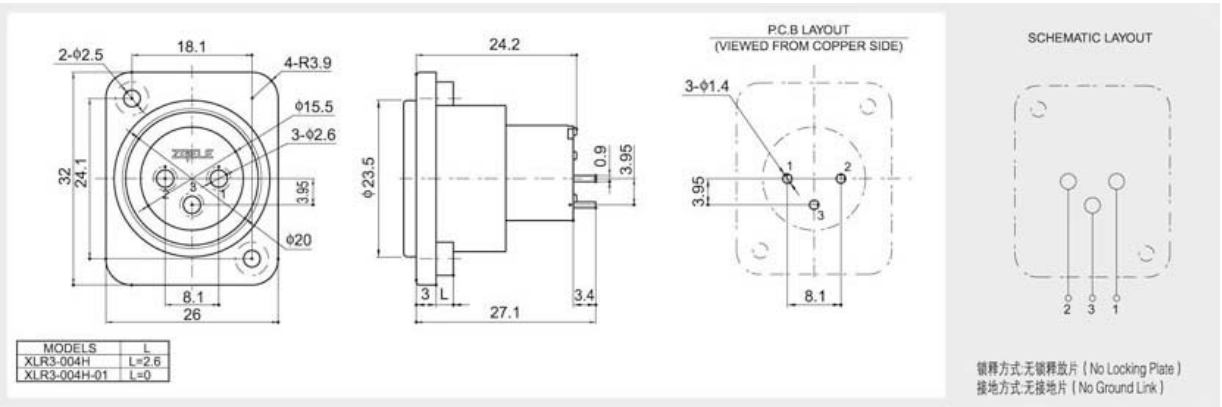

MODELS	L
XLR3-004H	L=2.6
XLR3-004H-01	L=0



XLR3-004H

ORDER INFORMATION

Product NO. : KLS1-XLR-S02-03-F-R-L2.6

- Pos. NO.
- S02=Socket 02 Type
- 03-No.of 03~07pin
- F-Female
- S=Dip Straight Pin R=Dip Right Pin

XLR Plug / XLR Socket Series

KLS1-XLR-S03 (XLR Socket)



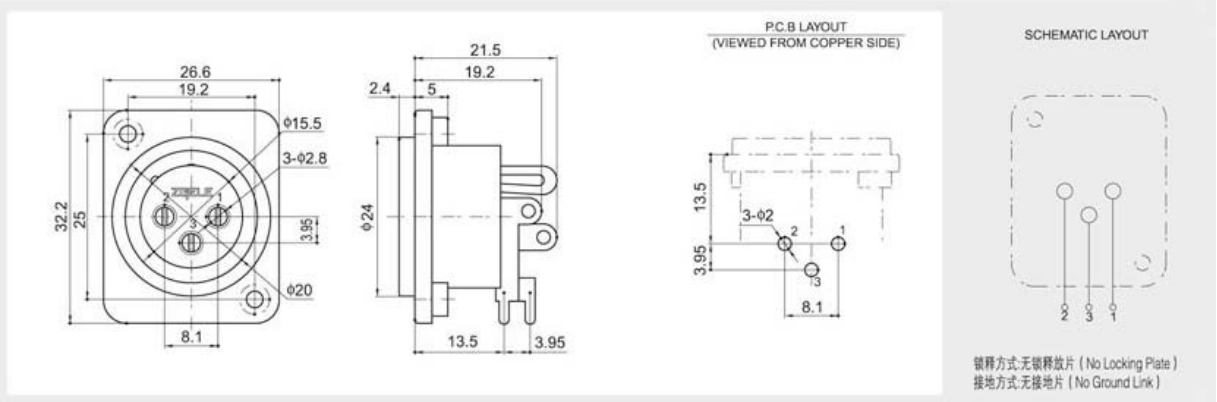

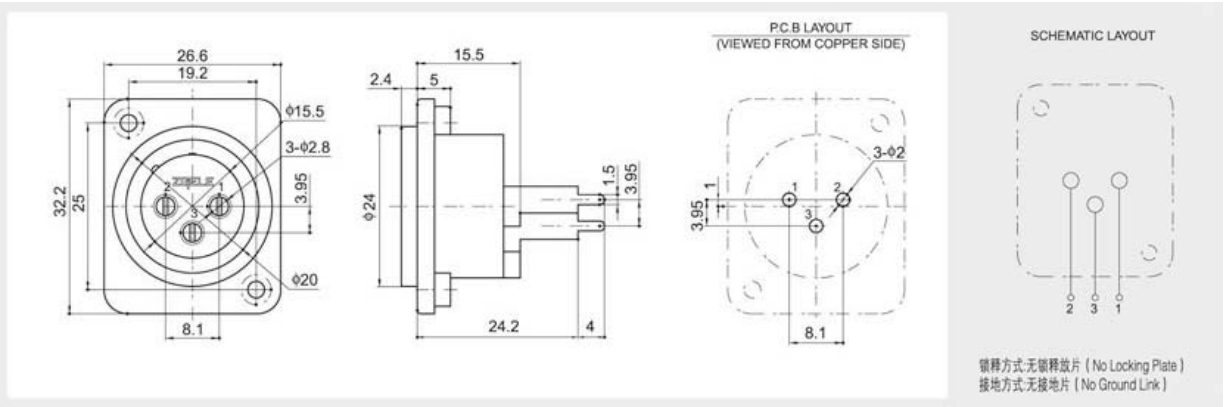



XLR3-005H

ORDER INFORMATION

Product NO. : KLS1-XLR-S03-03-F-R-L2.6

- Pos. NO.
- S03=Socket 03 Type
- 03-No.of 03~07pin
- F-Female
- S=Dip Straight Pin R=Dip Right Pin

XLR Plug / XLR Socket Series

KLS1-XLR-S04 (XLR Socket)



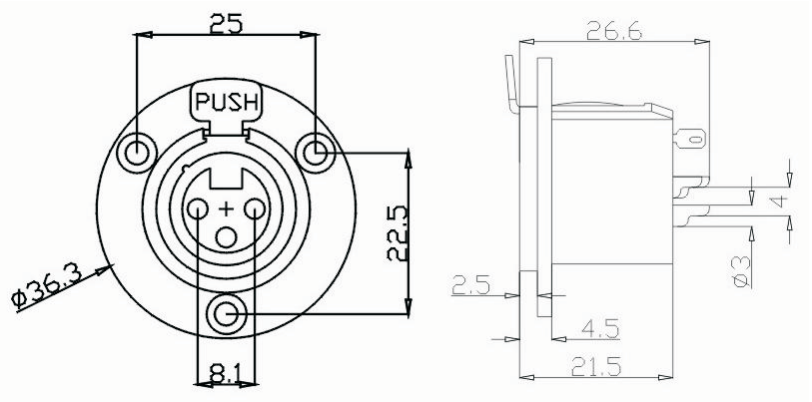



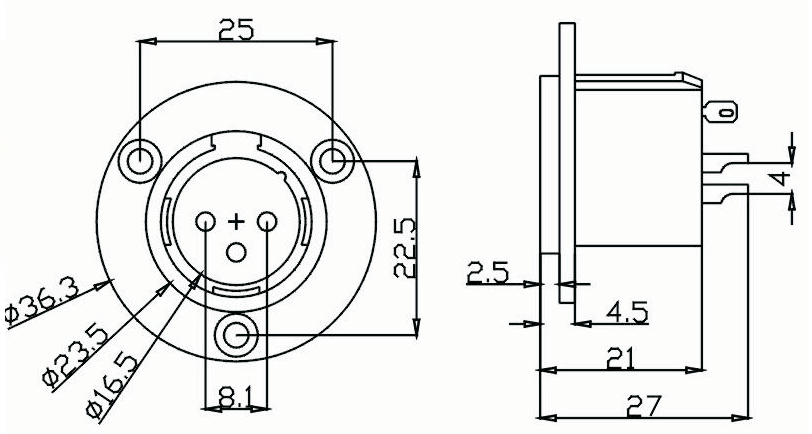

ORDER INFORMATION

Product NO. : KLS1-XLR-S04-03-F-S

- Pos. NO.
- S04=Socket 04 Type
- 03=3 Pin 04=4Pin 05=5 Pin
- M=Male F=Female
- S=Solder Type Straight Pin

XLR Plug / XLR Socket Series

KLS1-XLR-S05 (XLR Socket)



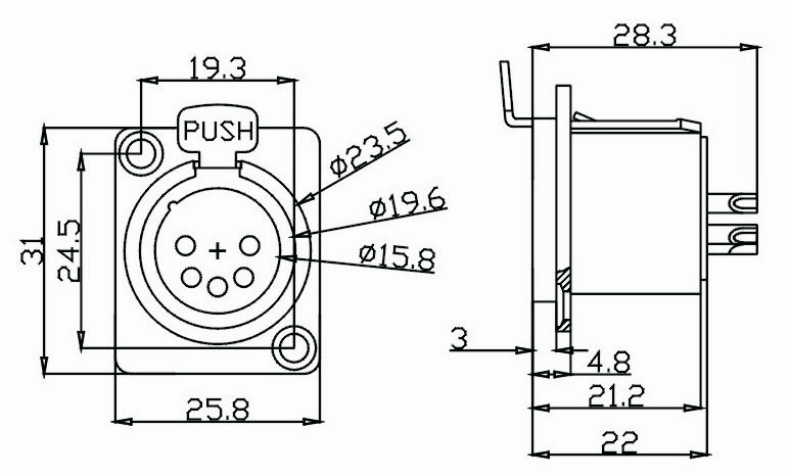



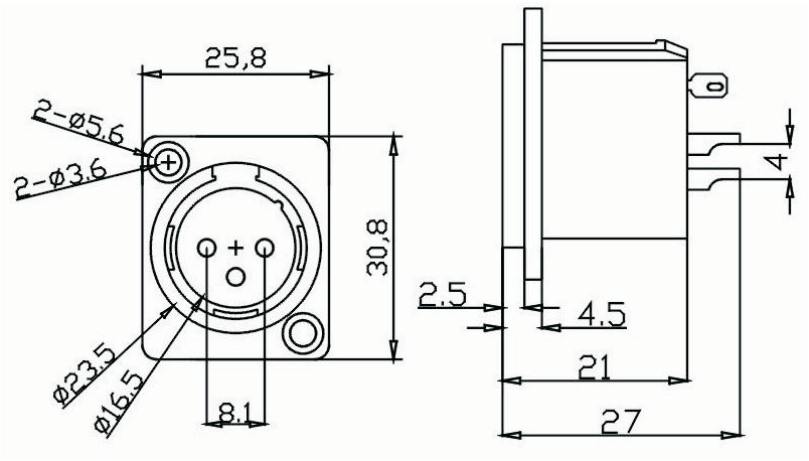

ORDER INFORMATION

Product NO. : KLS1-XLR-S05-03-F-S

- Pos. NO.
- S05=Socket 05 Type
- 03=3 Pin 04=4Pin 05=5 Pin
- M=Male F=Female
- S=Solder Type Straight Pin

XLR Plug / XLR Socket Series

KLS1-XLR-S06 (XLR Socket)

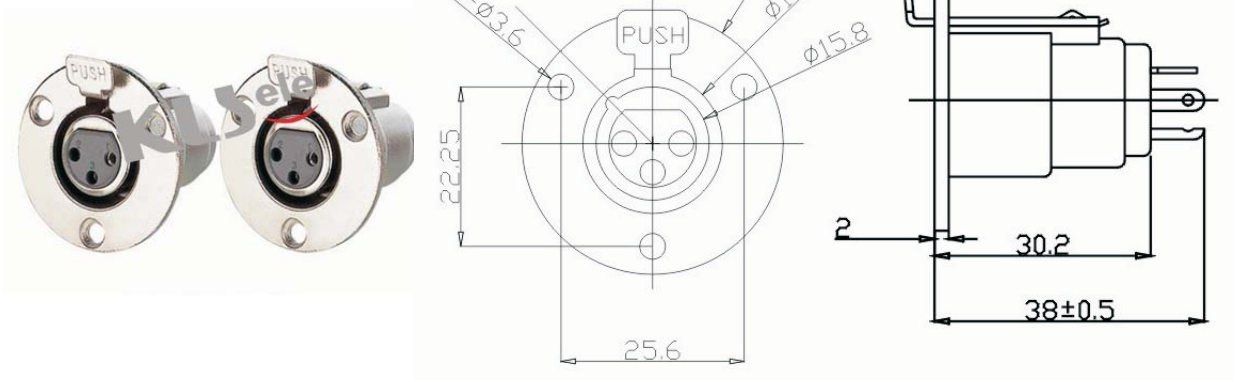

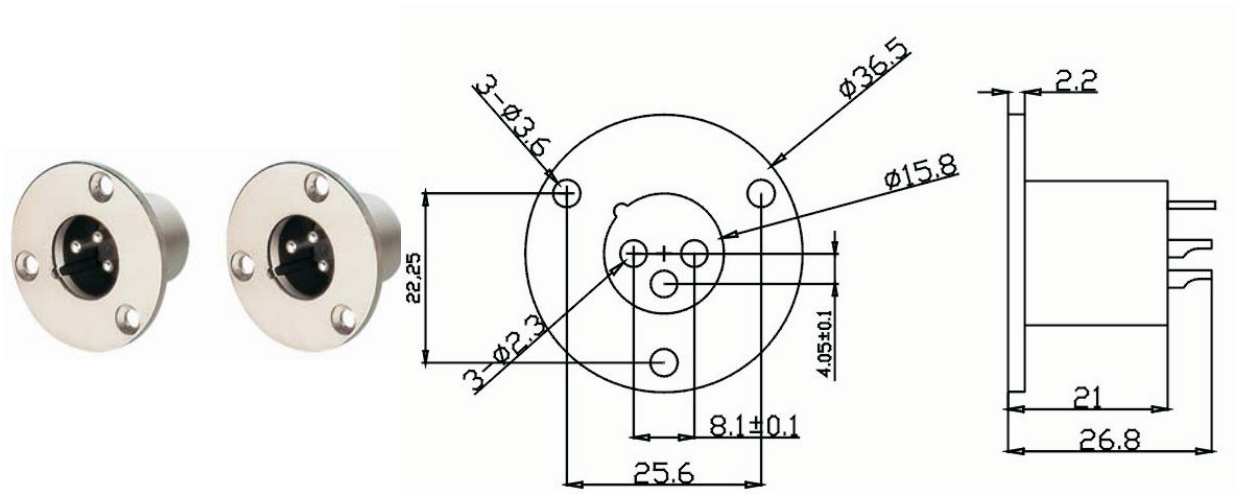

ORDER INFORMATION

Product NO. : KLS1-XLR-S06-03-F-S

- Pos. NO.
- S06=Socket 06 Type
- 03=3 Pin 04=4Pin 05=5 Pin 06=6Pin 07=7Pin
- M=Male F=Female
- S=Solder Type Straight Pin

XLR Plug / XLR Socket Series

KLS1-XLR-S07 (XLR Socket)



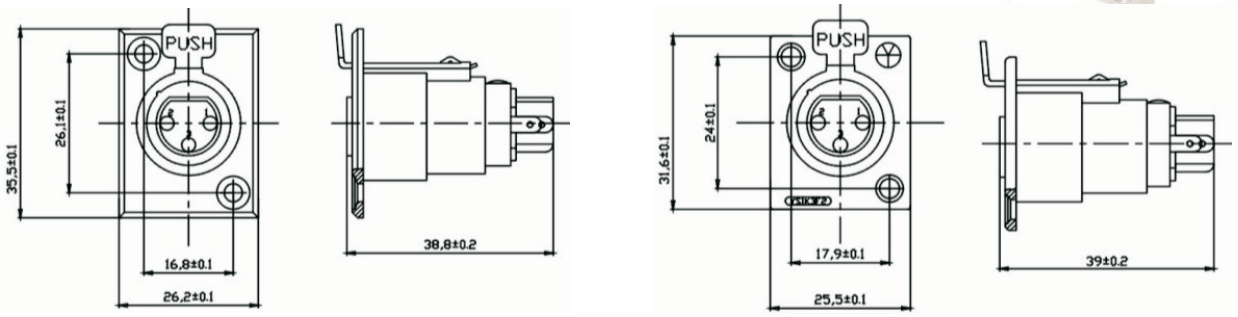

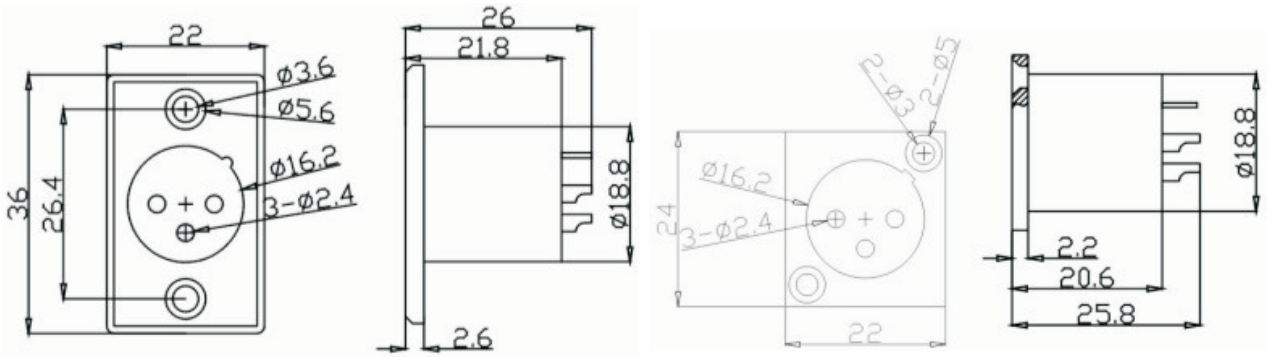

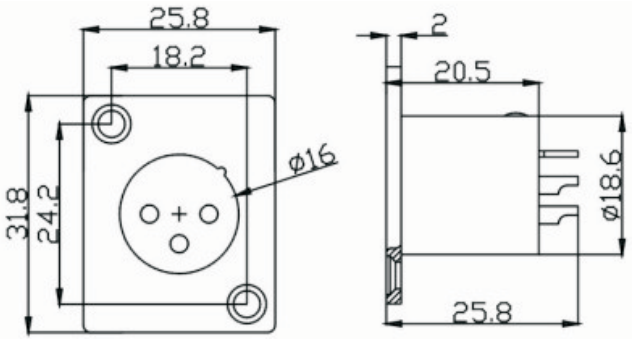



ORDER INFORMATION

Product NO. : KLS1-XLR-S07-03-F-S1

Pos. NO.
S07=Socket 07 Type
03=3 Pin 04=4Pin 05=5 Pin 06=6Pin 07=7Pin
M=Male F=Female
S=Solder Type Straight Pin S1 Or S2 Or S3

XLR Plug / XLR Socket Series



KLS1-XLR-S08 (XLR Socket)

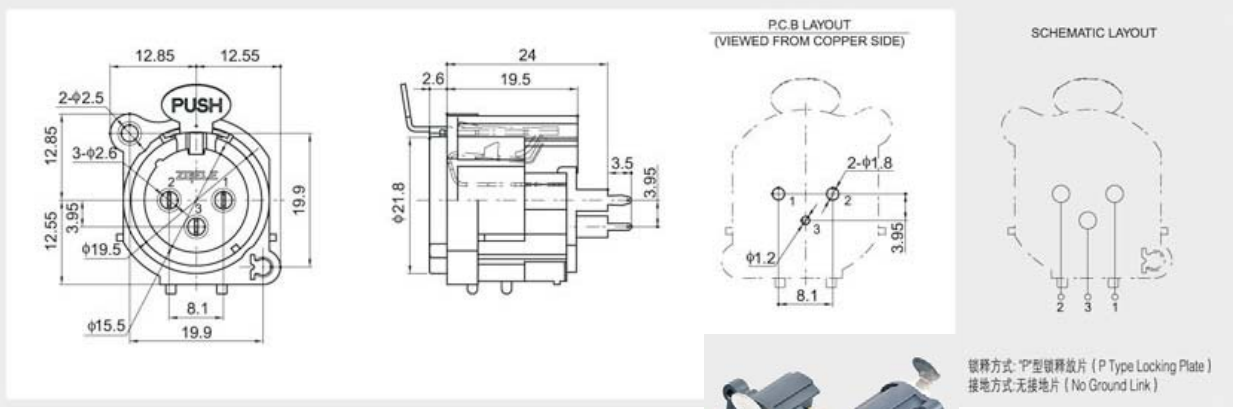



XLR3-003HAP

KLS1-XLR-S08-03-F-S-W:

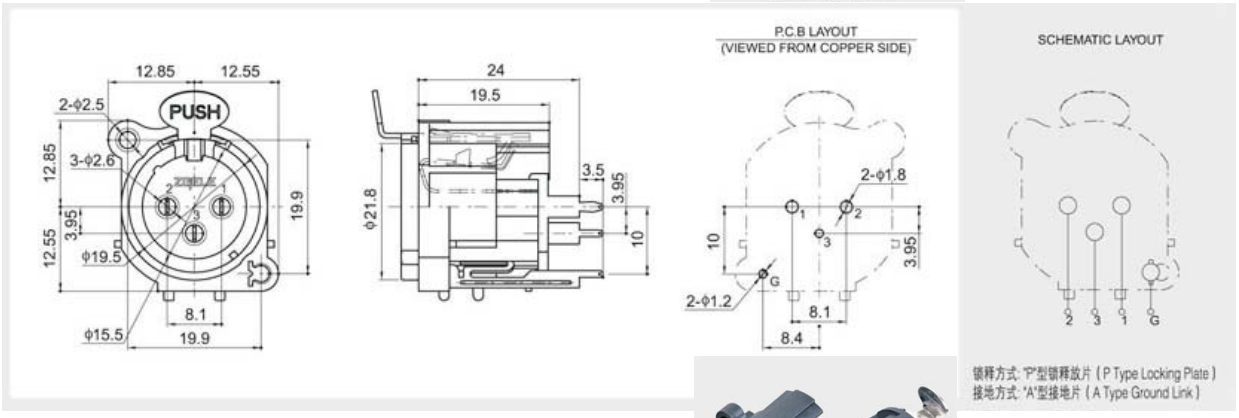



XLR3-003P

KLS1-XLR-S08-03-F-R-N:

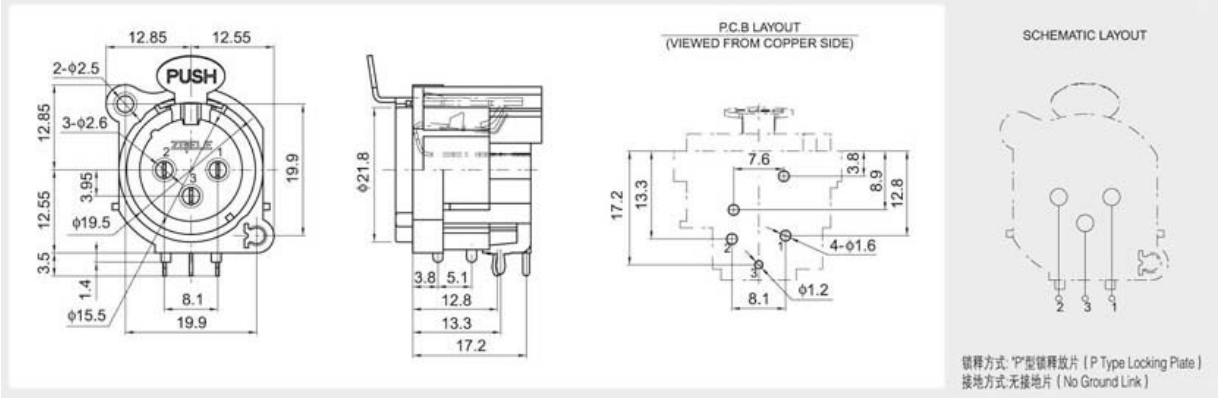

XLR Plug / XLR Socket Series



XLR3-003BP

KLS1-XLR-S08-03-F-R-W:

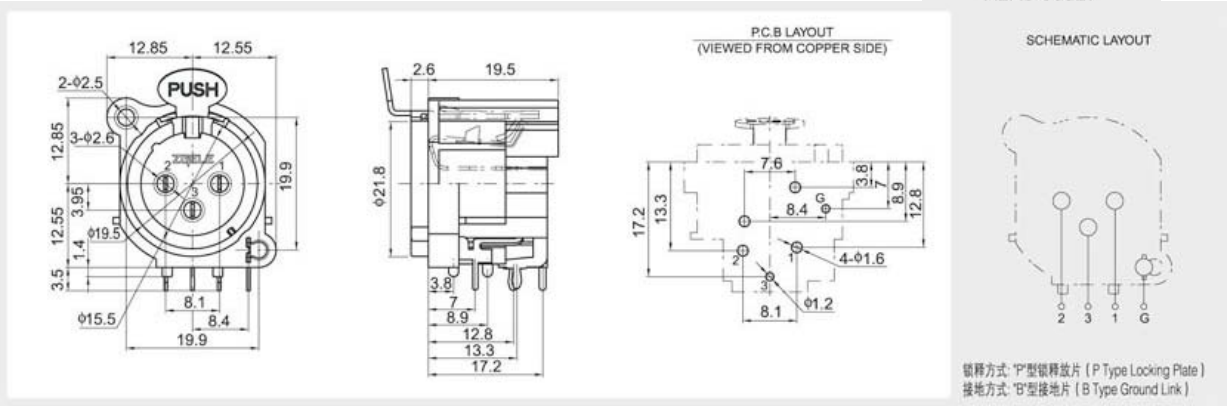

ORDER INFORMATION

Product NO.: KLS1-XLR-S08-03-F-S-N

Pos. NO.
S08=Socket 08 Type
03=3 Pin 05=5 Pin 07=7Pin
F=Female
S=Dip Straight Pin R=Dip Right Pin
N=No Ground Link Terminal W=With Ground Link Terminal

XLR Plug / XLR Socket Series

KLS1-XLR-S09 (XLR Socket)



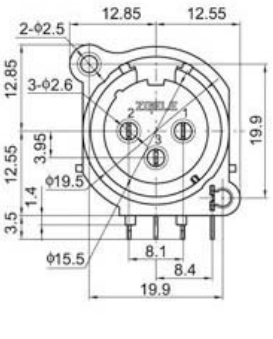

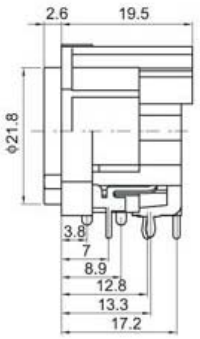

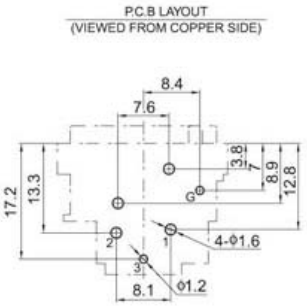

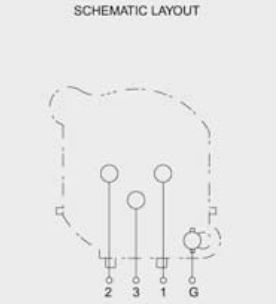

锁释方式:无锁释放片 (No Locking Plate)
接地方式:"B"型接地片 (B Type Ground Link)

KLS1-XLR-S09-03-F-R-N-W:



XLR3-003E

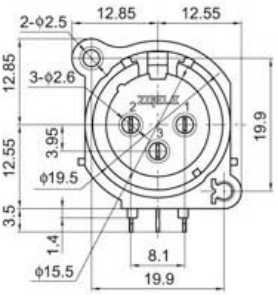

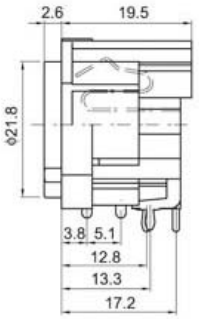

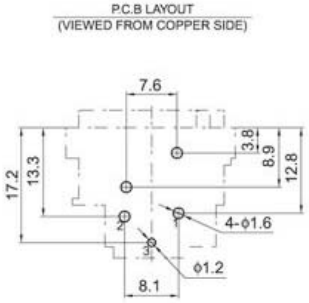

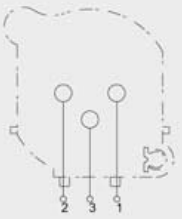

锁释方式:"E"型锁释放片 (E Type Locking Plate)
接地方式:无接地片 (No Ground Link)

KLS1-XLR-S09-03-F-S-W-W:



XLR3-003BE

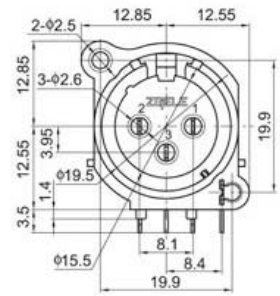

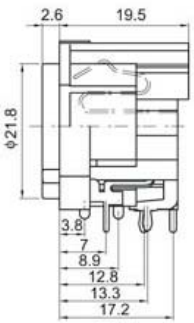

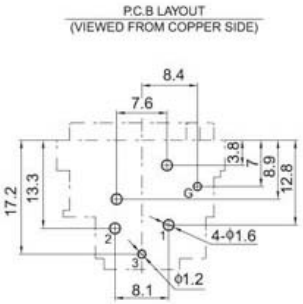

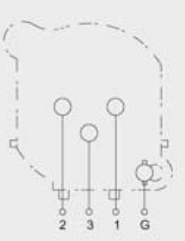

锁释方式:"E"型锁释放片 (E Type Locking Plate)
接地方式:"B"型接地片 (B Type Ground Link)

XLR Plug / XLR Socket Series

KLS1-XLR-S09-03-F-S-N-N :



XLR3-003H

SCHEMATIC LAYOUT

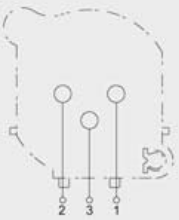

锁释方式:无锁释放片 (No Locking Plate)
接地方式:无接地片 (No Ground Link)

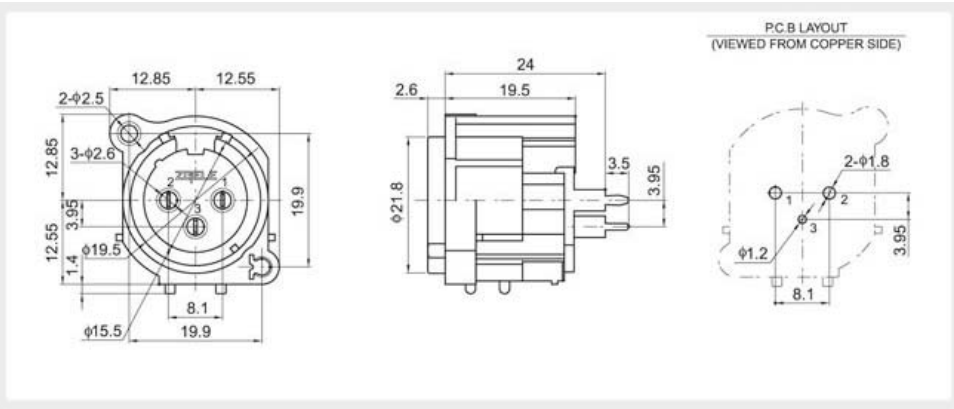

ORDER INFORMATION

Product NO. : KLS1-XLR-S09-03-F-R-W-N

- Pos. NO.
- S09=Socket 09 Type
- 03=3 Pin 05=5 Pin 07=7Pin
- F=Female
- S=Dip Straight Pin R=Dip Right Pin
- N=No Ground Link Terminal W=With Ground Link Terminal
- N=No Locking W=With Locking

XLR Plug / XLR Socket Series

KLS1-XLR-S10 (XLR Socket)

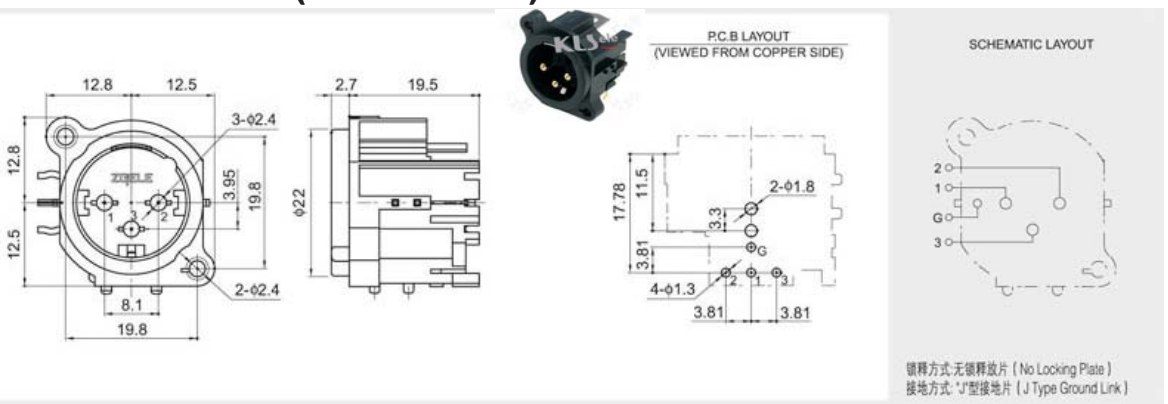

KLS1-XLR-S10-03-M-R2-W-N:

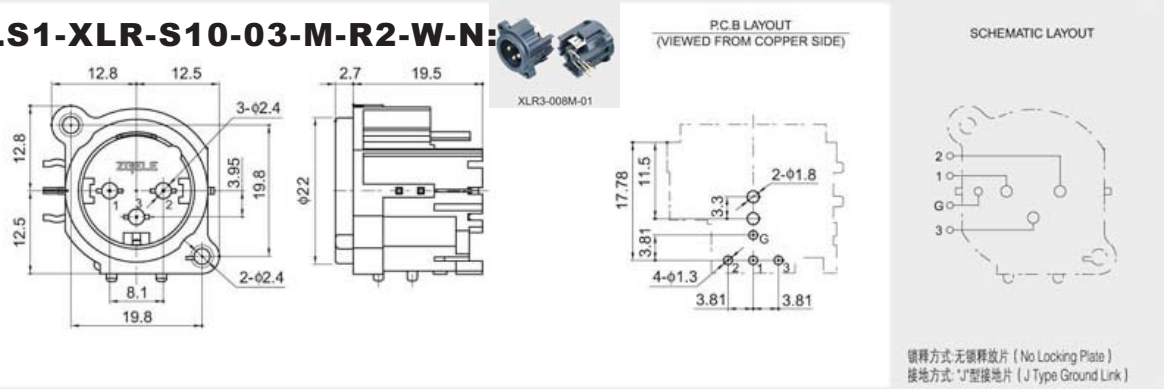

KLS1-XLR-S10-03-M-R3-W-N

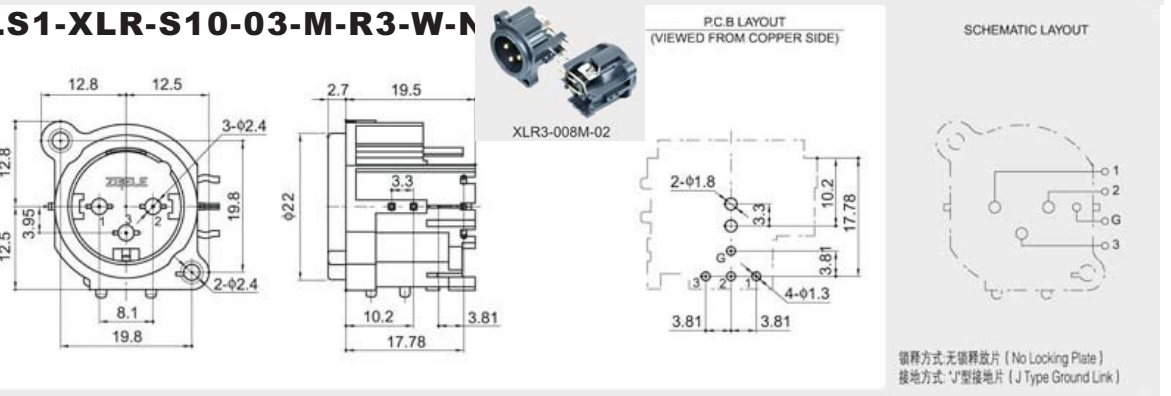

ORDER INFORMATION

Product NO. : KLS1-XLR-S10-03-M-R1-W-N

Pos. NO.
S10=Socket 10 Type
03=3 Pin 05=5 Pin 07=7Pin
M=Male
R1=Dip Right Pin R1,R2,R3
N=No Ground Link Terminal W=With Ground Link Terminal
N=No Locking W=With Locking

XLR Plug / XLR Socket Series

KLS1-XLR-S11 (XLR Socket)



KLS1-XLR-S11-03-M-S-W-N:

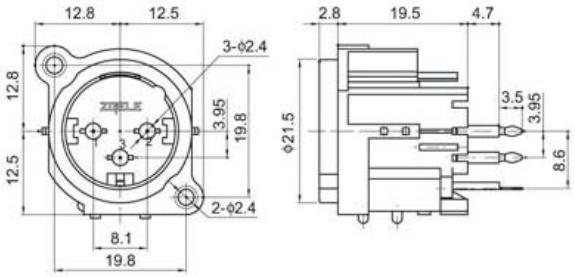

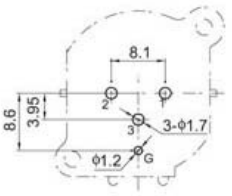

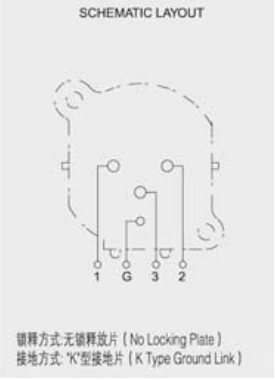

KLS1-XLR-S11-03-M-S-W-W:

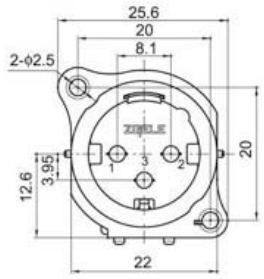

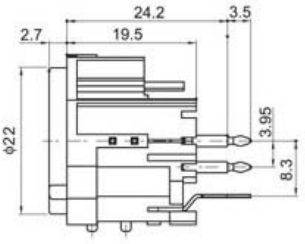

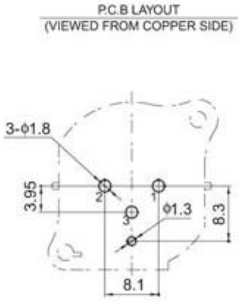

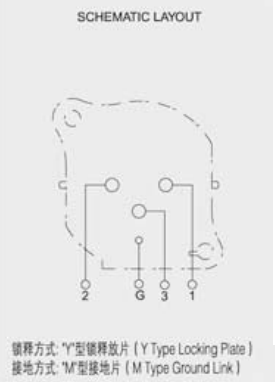



XLR3-008MH

ORDER INFORMATION

Product NO. : KLS1-XLR-S11-03-M-S-W-N

- Pos. NO.
- S11=Socket 11 Type
- 03=3 Pin 05=5 Pin 07=7Pin
- M=Male
- S=Dip Straight Pin
- N=No Ground Link Terminal W=With Ground Link Terminal
- N=No Locking W=With Locking

All specification & dimensions are subject to change, Please call your nearest KLS sales represesntative for update information

XLR Plug / XLR Socket Series

KLS1-XLR-S12 (XLR Socket)

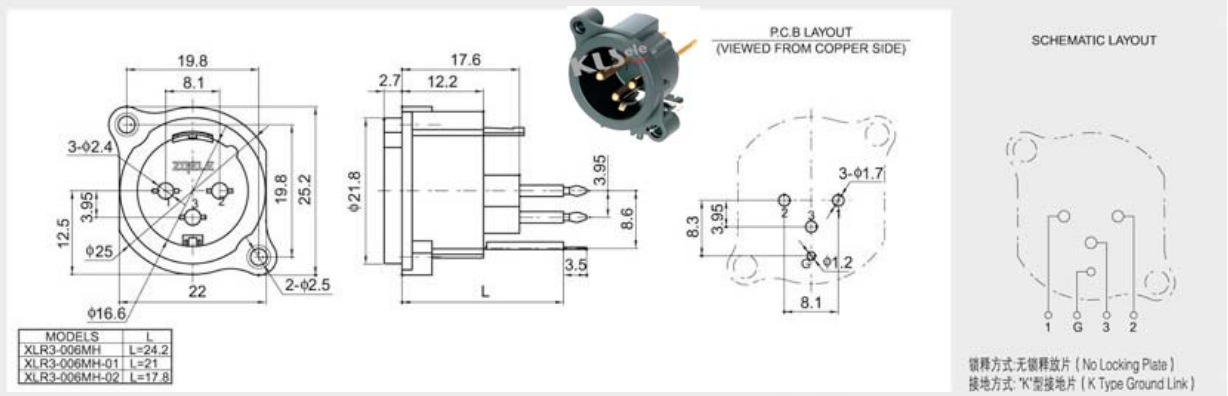

MODELS	L
XLR3-006MH	L=24.2
XLR3-006MH-01	L=21
XLR3-006MH-02	L=17.8

KLS1-XLR-S12-03-M-R-N-N:

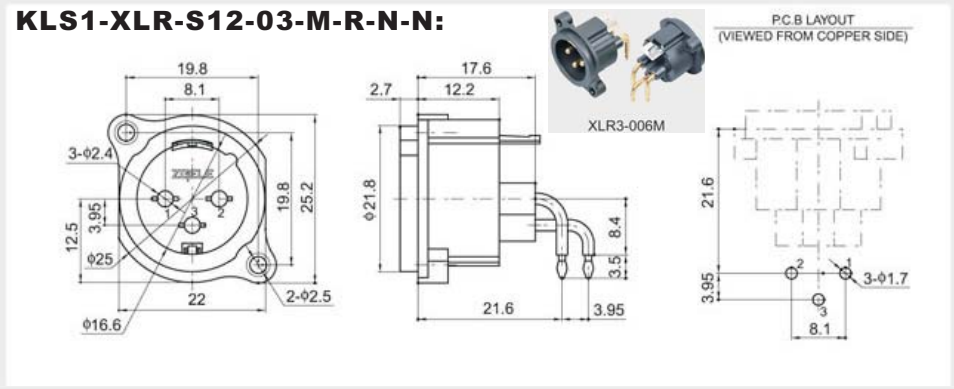

KLS1-XLR-S12-03-F-S-N-W:

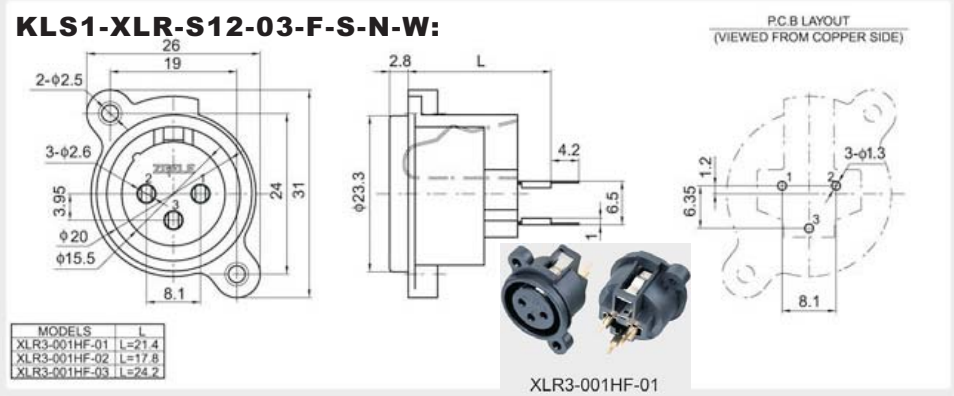

MODELS	L
XLR3-001HF-01	L=21.4
XLR3-001HF-02	L=17.8
XLR3-001HF-03	L=24.2

ORDER INFORMATION

Product NO. : KLS1-XLR-S12-03-M-S-W-N

- **Pos. NO.**
- **S12=Socket 12 Type**
- **03=3 Pin**
- **M=Male F=Female**
- **S=Dip Straight Pin R=Dip Right Pin**
- **N=No Ground Link Terminal W=With Ground Link Terminal**
- **N=No Locking W=With Locking**

XLR Plug / XLR Socket Series

KLS1-XLR-S13 (XLR Socket)

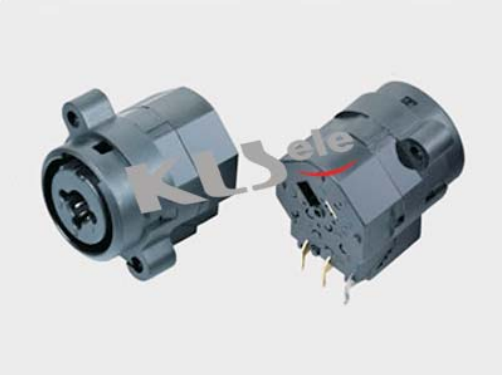



XLR/PJ-001

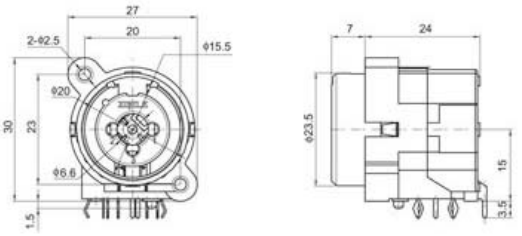

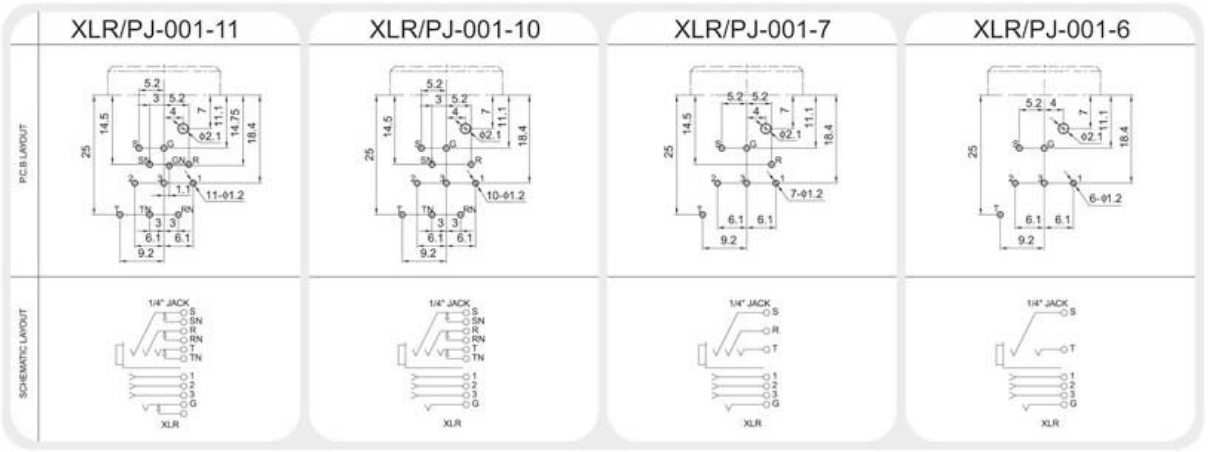

ORDER INFORMATION

Product NO. : KLS1-XLR-S13

Pos. NO.

Part NO.

XLR Plug / XLR Socket Series

KLS1-XLR-S14 (XLR Socket)





XLR/PJ-001P

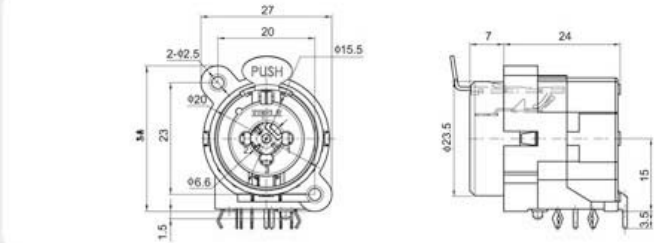

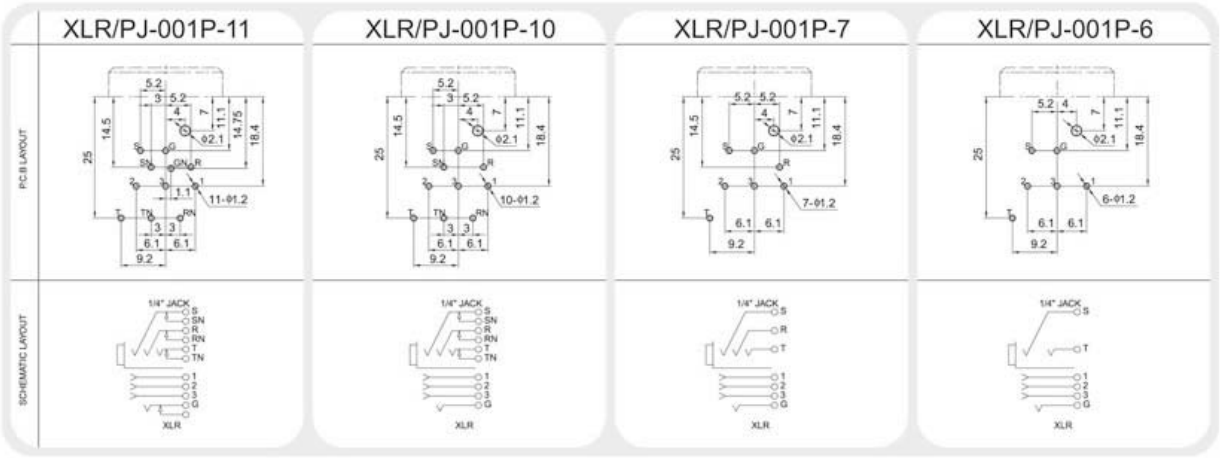

ORDER INFORMATION

Product NO. : KLS1-XLR-S14

Pos. NO.

Part NO.

XLR Plug / XLR Socket Series

KLS1-XLR-S15 (XLR Socket)

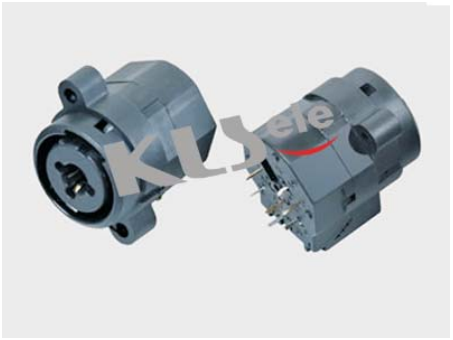



XLR/PJ-001H

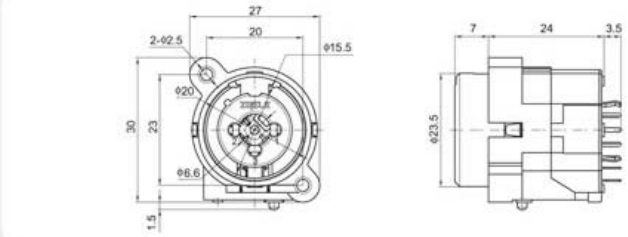

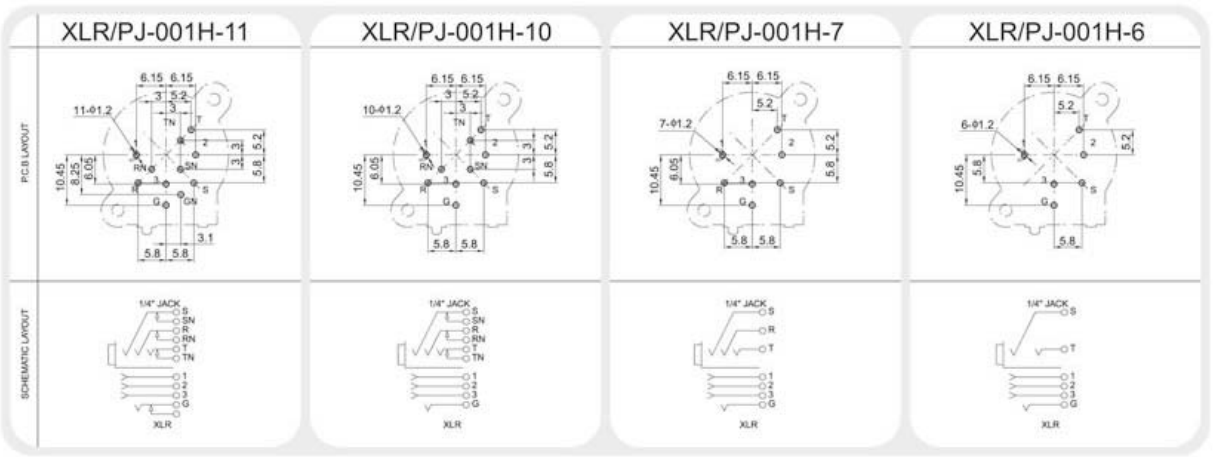

ORDER INFORMATION

Product NO. : KLS1-XLR-S15

Pos. NO.

Part NO.

XLR Plug / XLR Socket Series

KLS1-XLR-S16 (XLR Socket)





XLR/PJ-001HP

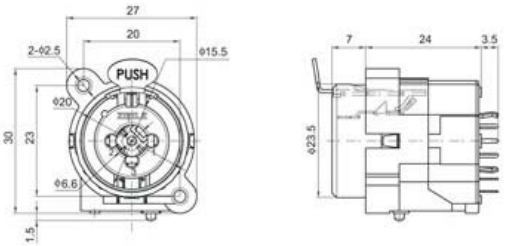

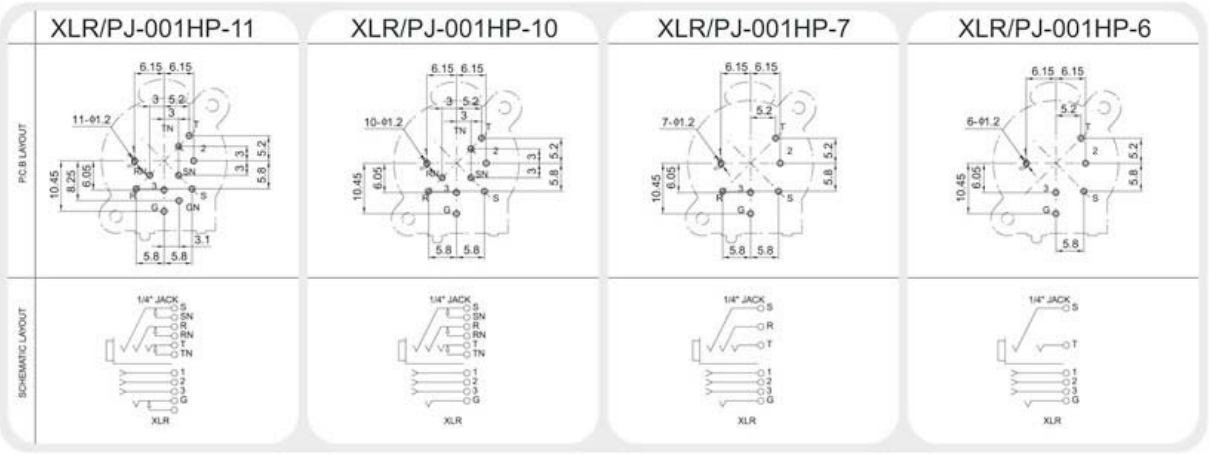

ORDER INFORMATION

Product NO. : KLS1-XLR-S16

Pos. NO.

Part NO.

XLR Plug / XLR Socket Series

KLS1-XLR-S17 (XLR Socket)





XLR/PJ-001HT-01

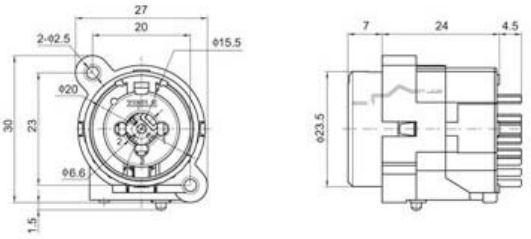

XLR/PJ-001H-01-11	XLRP/J-001H-01-10	XLR/PJ-001H-01-7	XLR/PJ-001H-01-6
PCB LAYOUT	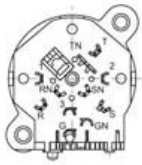	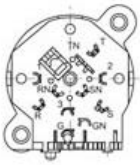	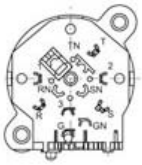	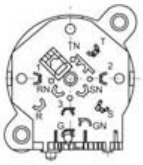
SCHEMATIC LAYOUT	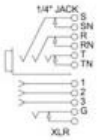		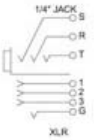	

ORDER INFORMATION

Product NO. : KLS1-XLR-S17

Pos. NO.
Part NO.

XLR Plug / XLR Socket Series

KLS1-XLR-S18 (XLR Socket)

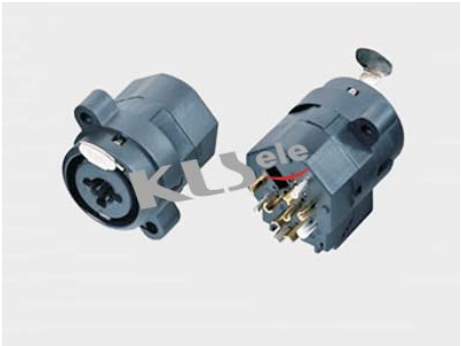



XLR/PJ-001P-01

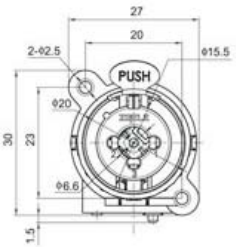

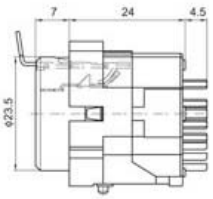

XLR/PJ-001HP-01-11	XLR/PJ-001HP-01-10	XLR/PJ-001HP-01-7	XLR/PJ-001HP-01-6
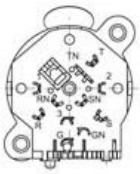	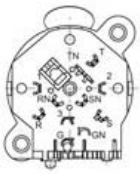	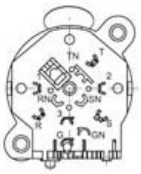	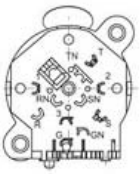
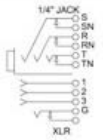	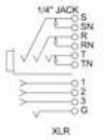	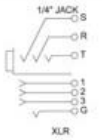	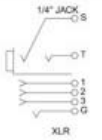

ORDER INFORMATION

Product NO. : KLS1-XLR-S18

Pos. NO.
Part NO.

Adaptor Series

KLS1-PTJ-01 (MONO Plug To Jack)





ORDER INFORMATION

KLS's Part No.	Description
KLS1-PLJ-01-6.3A-N	6.3mm Mono Plug To 3.5mm Mono Jack/ Nickel-plated
KLS1-PLJ-01-6.3B-G	6.3mm Mono Plug To 3.5mm Stereo Jack/ Gold-plated
KLS1-PLJ-01-6.3C-N	6.3mm Mono Plug To 6.3mm Mono Jack/ Nickel-plated
KLS1-PLJ-01-6.3D-G	6.3mm Mono Plug To 6.3mm Stereo Jack/ Gold-plated

Remark: Optional gold-plated nickel

Adaptor Series

KLS1-PTJ-01A (Stereo Plug To Jack)



ORDER INFORMATION

KLS's Part No.	Description
KLS1-PTJ-01A-6.3A-N	6.3mm Stereo Plug To 3.5mm Mono Jack/ Nickel-plated
KLS1-PTJ-01A-6.3B-G	6.3mm Stereo Plug To 3.5mm Stereo Jack/ Gold-plated
KLS1-PTJ-01A-6.3C-N	6.3mm Stereo Plug To 6.3mm Mono Jack/ Nickel-plated
KLS1-PTJ-01A-6.3D-G	6.3mm Stereo Plug To 6.3mm Stereo Jack/ Gold-plated

Remark: Optional gold-plated nickel

Adaptor Series

KLS1-PTJ-02 (MONO Plug To Jack)



ORDER INFORMATION

KLS's Part No.	Description
KLS1-PTJ-02-2.5A-N	2.5mm Mono Plug To 3.5mm Mono Jack/ Nickel-plated
KLS1-PTJ-02-2.5B-G	2.5mm Mono Plug To 3.5mm Stereo Jack/ Gold-plated
KLS1-PTJ-02-2.5C-N	2.5mm Mono Plug To 6.3mm Mono Jack/ Nickel-plated
KLS1-PTJ-02-2.5D-G	2.5mm Mono Plug To 6.3mm Stereo Jack/ Gold-plated
KLS1-PTJ-02-3.5A-N	3.5mm Mono Plug To 2.5mm Mono Jack/ Nickel-plated
KLS1-PTJ-02-3.5B-G	3.5mm Mono Plug To 2.5mm Stereo Jack/ Gold-plated
KLS1-PTJ-02-3.5C-N	3.5mm Mono Plug To 3.5mm Mono Jack/ Nickel-plated
KLS1-PTJ-02-3.5D-G	3.5mm Mono Plug To 3.5mm Stereo Jack/ Gold-plated
KLS1-PTJ-02-3.5E-N	3.5mm Mono Plug To 6.3mm Mono Jack/ Nickel-plated
KLS1-PTJ-02-3.5F-G	3.5mm Mono Plug To 6.3mm Stereo Jack/ Gold-plated

Remark: Optional gold-plated nickel

Adaptor Series

KLS1-PTJ-02A (Stereo Plug To Jack)





ORDER INFORMATION

KLS's Part No.	Description
KLS1-PTJ-02A-2.5A-N	2.5mm Stereo Jack To 3.5mm Mono Jack/ Nickel-plated
KLS1-PTJ-02A-2.5B-G	2.5mm Stereo Jack To 3.5mm Stereo Jack/ Gold-plated
KLS1-PTJ-02A-2.5C-N	2.5mm Stereo Jack To 6.3mm Mono Jack/ Nickel-plated
KLS1-PTJ-02A-2.5D-G	2.5mm Stereo Jack To 6.3mm Stereo Jack/ Gold-plated
KLS1-PTJ-02A-3.5A-N	3.5mm Stereo Jack To 2.5mm Mono Jack/ Nickel-plated
KLS1-PTJ-02A-3.5B-G	3.5mm Stereo Jack To 2.5mm Stereo Jack/ Gold-plated
KLS1-PTJ-02A-3.5C-N	3.5mm Stereo Jack To 3.5mm Mono Jack/ Nickel-plated
KLS1-PTJ-02A-3.5D-G	3.5mm Stereo Jack To 3.5mm Stereo Jack/ Gold-plated
KLS1-PTJ-02A-3.5E-N	3.5mm Stereo Jack To 6.3mm Mono Jack/ Nickel-plated
KLS1-PTJ-02A-3.5F-G	3.5mm Stereo Jack To 6.3mm Stereo Jack/ Gold-plated

Remark: Optional gold-plated nickel

All specification & dimensions are subject to change, Please call your nearest KLS sales represesntative for update information

Adaptor Series

KLS1-PTJ-04 (MONO Plug To Jack)



ORDER INFORMATION

KLS's Part No.	Description
KLS1-PLJ-04-3.5A-N	3.5mm Mono Plug To 6.3mm Mono Jack/ Nickel-plated
KLS1-PLJ-04-3.5B-G	3.5mm Mono Plug To 6.3mm Stereo Jack/ Gold-plated
KLS1-PLJ-04-6.3A-N	6.3mm Mono Plug To 6.3mm Mono Jack/ Nickel-plated
KLS1-PLJ-04-6.3B-G	6.3mm Mono Plug To 6.3mm Stereo Jack/ Gold-plated

Remark: Optional gold-plated nickel

All specification & dimensions are subject to change, Please call your nearest KLS sales represesntative for update information

Adaptor Series

KLS1-PTJ-04A (Stereo Plug To Jack)



ORDER INFORMATION

KLS's Part No.	Description
KLS1-PLJ-04A-3.5A-N	3.5mm Stereo Plug To 6.3mm Mono Jack/ Nickel-plated
KLS1-PLJ-04A-3.5B-G	3.5mm Stereo Plug To 6.3mm Stereo Jack/ Gold-plated
KLS1-PLJ-04A-6.3A-N	6.3mm Stereo Plug To 6.3mm Mono Jack/ Nickel-plated
KLS1-PLJ-04A-6.3B-G	6.3mm Stereo Plug To 6.3mm Stereo Jack/ Gold-plated

Remark: Optional gold-plated nickel

All specification & dimensions are subject to change, Please call your nearest KLS sales represesntative for update information

Adaptor Series

KLS1-PTJ-05 (MONO Plug To Jack)





ORDER INFORMATION

KLS's Part No.	Description
KLS1-PTJ-05-2.5A-N	2.5mm Mono Plug To 3.5mm Mono Jack/ Nickel-plated
KLS1-PTJ-05-2.5B-G	2.5mm Mono Plug To 3.5mm Stereo Jack/ Gold-plated
KLS1-PTJ-05-2.5C-N	2.5mm Mono Plug To 6.3mm Mono Jack/ Nickel-plated
KLS1-PTJ-05-2.5D-G	2.5mm Mono Plug To 6.3mm Stereo Jack/ Gold-plated
KLS1-PTJ-05-3.5A-N	3.5mm Mono Plug To 3.5mm Mono Jack/ Nickel-plated
KLS1-PTJ-05-3.5B-G	3.5mm Mono Plug To 3.5mm Stereo Jack/ Gold-plated
KLS1-PTJ-05-3.5C-N	3.5mm Mono Plug To 6.3mm Mono Jack/ Nickel-plated
KLS1-PTJ-05-3.5D-G	3.5mm Mono Plug To 6.3mm Stereo Jack/ Gold-plated

Remark: Optional gold-plated nickel

Adaptor Series

KLS1-PTJ-05A (Stereo Plug To Jack)





ORDER INFORMATION

KLS's Part No.	Description
KLS1-PTJ-05A-2.5A-N	2.5mm Stereo Plug To 3.5mm Mono Jack/ Nickel-plated
KLS1-PTJ-05A-2.5B-G	2.5mm Stereo Plug To 3.5mm Stereo Jack/ Gold-plated
KLS1-PTJ-05A-2.5C-N	2.5mm Stereo Plug To 6.3mm Mono Jack/ Nickel-plated
KLS1-PTJ-05A-2.5D-G	2.5mm Stereo Plug To 6.3mm Stereo Jack/ Gold-plated
KLS1-PTJ-05A-3.5A-N	3.5mm Stereo Plug To 3.5mm Mono Jack/ Nickel-plated
KLS1-PTJ-05A-3.5B-G	3.5mm Stereo Plug To 3.5mm Stereo Jack/ Gold-plated
KLS1-PTJ-05A-3.5C-N	3.5mm Stereo Plug To 6.3mm Mono Jack/ Nickel-plated
KLS1-PTJ-05A-3.5D-G	3.5mm Stereo Plug To 6.3mm Stereo Jack/ Gold-plated

Remark: Optional gold-plated nickel

Adaptor Series

KLS1-PTJ-06 (MONO Plug To Jack)





ORDER INFORMATION

KLS's Part No.	Description
KLS1-PLJ-06-6.3A-N	6.3mm Mono Plug To 3.5mm Mono Jack/ Nickel-plated
KLS1-PLJ-06-6.3B-G	6.3mm Mono Plug To 3.5mm Stereo Jack/ Gold-plated
KLS1-PLJ-06-6.3C-N	6.3mm Mono Plug To 6.3mm Mono Jack/ Nickel-plated
KLS1-PLJ-06-6.3D-G	6.3mm Mono Plug To 6.3mm Stereo Jack/ Gold-plated

Remark: Optional gold-plated nickel

Adaptor Series

KLS1-PTJ-06A (Stereo Plug To Jack)



ORDER INFORMATION

KLS's Part No.	Description
KLS1-PTJ-06A-6.3A-N	6.3mm Stereo Plug To 3.5mm Mono Jack/ Nickel-plated
KLS1-PTJ-06A-6.3B-G	6.3mm Stereo Plug To 3.5mm Stereo Jack/ Gold-plated
KLS1-PTJ-06A-6.3C-N	6.3mm Stereo Plug To 6.3mm Mono Jack/ Nickel-plated
KLS1-PTJ-06A-6.3D-G	6.3mm Stereo Plug To 6.3mm Stereo Jack/ Gold-plated

Remark: Optional gold-plated nickel

Adaptor Series

KLS1-PTJ-13 (Jack To Jack)



ORDER INFORMATION

KLS's Part No.	Description
KLS1-PTJ-13-3.5A-N	3.5mm Mono Jack To 3.5mm Mono Jack/ Nickel-plated
KLS1-PTJ-13-3.5B-G	6.3mm Stereo Jack To 3.5mm Stereo Jack/ Gold-plated
KLS1-PTJ-13-6.3A-N	6.3mm Mono Jack To 6.3mm Mono Jack/ Nickel-plated
KLS1-PTJ-13-6.3B-G	6.3mm Stereo Jack To 6.3mm Stereo Jack/ Gold-plated

Remark: Optional gold-plated nickel

All specification & dimensions are subject to change, Please call your nearest KLS sales represesntative for update information

Adaptor Series

KLS1-PTJ-03 (MONO Plug To RCA Jack)





ORDER INFORMATION

KLS's Part No.	Description
KLS1-PTJ-03-2.5-N	2.5mm MONO Plug To RCA Jack/ Nickel-plated
KLS1-PTJ-03-3.5-N	3.5mm MONO Plug To RCA Jack/ Nickel-plated
KLS1-PTJ-03-6.3-N	6.3mm MONO Plug To RCA Jack/ Nickel-plated
KLS1-PTJ-03-2.5-G	2.5mm MONO Plug To RCA Jack/ Gold-plated
KLS1-PTJ-03-3.5-G	3.5mm MONO Plug To RCA Jack/ Gold-plated
KLS1-PTJ-03-6.3-G	6.3mm MONO Plug To RCA Jack/ Gold-plated

Remark: Optional gold-plated nickel

Adaptor Series

KLS1-PTJ-03A (Stereo Plug To RCA Jack)





ORDER INFORMATION

KLS's Part No.	Description
KLS1-PTJ-03A-2.5-N	2.5mm Stereo Plug To RCA Jack/ Nickel-plated
KLS1-PTJ-03A-3.5-N	3.5mm Stereo Plug To RCA Jack/ Nickel-plated
KLS1-PTJ-03A-6.3-N	6.3mm Stereo Plug To RCA Jack/ Nickel-plated
KLS1-PTJ-03A-2.5-G	2.5mm Stereo Plug To RCA Jack/ Gold-plated
KLS1-PTJ-03A-3.5-G	3.5mm Stereo Plug To RCA Jack/ Gold-plated
KLS1-PTJ-03A-6.3-G	6.3mm Stereo Plug To RCA Jack/ Gold-plated

Remark: Optional gold-plated nickel

Adaptor Series

KLS1-PTJ-07 (RCA Plug To 3.5mm Mono Socket)





ORDER INFORMATION

KLS's Part No.	Description
KLS1-PTJ-07-3.5A-N	Metal RCA Plug To 3.5mm Mono Jack/ Nickel-plated
KLS1-PTJ-07-3.5B-G	Metal RCA Plug To 3.5mm Stereo Jack/ Gold-plated
KLS1-PTJ-07-6.3A-N	Metal RCA Plug To 6.3mm Mono Jack/ Nickel-plated
KLS1-PTJ-07-6.3B-G	Metal RCA Plug To 6.3mm Stereo Jack/ Gold-plated

Remark: Optional gold-plated nickel

Adaptor Series

KLS1-PTJ-08 (RCA Plug To 3.5mm Mono Socket)



ORDER INFORMATION

KLS's Part No.	Description
KLS1-PTJ-08-3.5A-N	Metal RCA Plug To 3.5mm Mono Jack/ Nickel-plated
KLS1-PTJ-08-3.5B-G	Metal RCA Plug To 3.5mm Stereo Jack/ Gold-plated
KLS1-PTJ-08-6.3A-N	Metal RCA Plug To 6.3mm Mono Jack/ Nickel-plated
KLS1-PTJ-08-6.3B-G	Metal RCA Plug To 6.3mm Stereo Jack/ Gold-plated

Remark: Optional gold-plated nickel

All specification & dimensions are subject to change, Please call your nearest KLS sales represesntative for update information

Adaptor Series

KLS1-PTJ-09 (RCA Plug To RCA Jack)



ORDER INFORMATION

KLS's Part No.	Description
KLS1-PTJ-09-N	Metal RCA Plug To RCA Jack/ Nickel-plated
KLS1-PTJ-09-G	Metal RCA Plug To RCA Jack/ Gold-plated

Remark: Optional gold-plated nickel

Adaptor Series

KLS1-PTJ-12 (RCA Plug To RCA Jack)



ORDER INFORMATION

KLS's Part No.	Description
KLS1-PTJ-12-N	Metal RCA Plug To RCA Jack/ Nickel-plated
KLS1-PTJ-12-G	Metal RCA Plug To RCA Jack/ Gold-plated

Remark: Optional gold-plated nickel

Adaptor Series

KLS1-PTJ-11 (RCA Jack To RCA Jack)



ORDER INFORMATION

KLS's Part No.	Description
KLS1-PTJ-11-1P--N	1PIN RCA Jack To RCA Jack/ Nickel-plated
KLS1-PTJ-11-1P--G	1PIN RCA Jack To RCA Jack/ Gold-plated

Remark: Optional gold-plated nickel

Adaptor Series

KLS1-PTJ-10 (RCA Jack To RCA Jack)



ORDER INFORMATION

KLS's Part No.	Description
KLS1-PTJ-10A-1P--N	1PIN RCA Jack To RCA Jack/ Nickel-plated
KLS1-PTJ-10A-1P--G	1PIN RCA Jack To RCA Jack/ Gold-plated
KLS1-PTJ-10A-2P--N	2PIN RCA Jack To RCA Jack/ Nickel-plated
KLS1-PTJ-10A-2P--G	2PIN RCA Jack To RCA Jack/ Gold-plated
KLS1-PTJ-10A-3P--N	3PIN RCA Jack To RCA Jack/ Nickel-plated
KLS1-PTJ-10A-3P--G	3PIN RCA Jack To RCA Jack/ Gold-plated
KLS1-PTJ-10A-1P--N	1PIN RCA Jack To RCA Jack/ Nickel-plated
KLS1-PTJ-10A-1P--G	1PIN RCA Jack To RCA Jack/ Gold-plated
KLS1-PTJ-10A-2P--N	2PIN RCA Jack To RCA Jack/ Nickel-plated
KLS1-PTJ-10A-2P--G	2PIN RCA Jack To RCA Jack/ Gold-plated
KLS1-PTJ-10A-3P--N	3PIN RCA Jack To RCA Jack/ Nickel-plated
KLS1-PTJ-10A-3P--G	3PIN RCA Jack To RCA Jack/ Gold-plated

Remark: Optional gold-plated nickel

Adaptor Series

KLS1-PTJ-14 (Jack To Jack)



ORDER INFORMATION

KLS's Part No.	Description
KLS1-PTJ-14-3.5A-N	3.5mm Mono Jack To 3.5mm Mono Jack/ Nickel-plated
KLS1-PTJ-14-3.5B-G	6.3mm Stereo Jack To 3.5mm Stereo Jack/ Gold-plated
KLS1-PTJ-14-6.3A-N	6.3mm Mono Jack To 6.3mm Mono Jack/ Nickel-plated
KLS1-PTJ-14-6.3B-G	6.3mm Stereo Jack To 6.3mm Stereo Jack/ Gold-plated

Remark: Optional gold-plated nickel

Adaptor Series

KLS1-PTJ-15 (MONO Plug To Jack)







ORDER INFORMATION

KLS's Part No.	Description
KLS1-PTJ-15-3.5A-N	3.5mm Mono Plug To 2X3.5mm Mono Jack/ Nickel-plated
KLS1-PTJ-15-3.5B-G	3.5mm Mono Plug To 2X3.5mm Stereo Jack/ Gold-plated
KLS1-PTJ-15-3.5C-N	3.5mm Mono Plug To 2X6.3mm Mono Jack/ Nickel-plated
KLS1-PTJ-15-3.5D-G	3.5mm Mono Plug To 2X6.3mm Stereo Jack/ Gold-plated
KLS1-PTJ-15-6.3A-N	6.3mm Mono Plug To 2X3.5mm Mono Jack/ Nickel-plated
KLS1-PTJ-15-6.3B-G	6.3mm Mono Plug To 2X3.5mm Stereo Jack/ Gold-plated

Remark: Optional gold-plated nickel

Adaptor Series

KLS1-PTJ-15A (Stereo Plug To Jack)







ORDER INFORMATION

KLS's Part No.	Description
KLS1-PTJ-15A-3.5A-N	3.5mm Stereo Plug To 2X3.5mm Mono Jack/ Nickel-plated
KLS1-PTJ-15A-3.5B-G	3.5mm Stereo Plug To 2X3.5mm Stereo Jack/ Gold-plated
KLS1-PTJ-15A-3.5C-N	3.5mm Stereo Plug To 2X6.3mm Mono Jack/ Nickel-plated
KLS1-PTJ-15A-3.5D-G	3.5mm Stereo Plug To 2X6.3mm Stereo Jack/ Gold-plated
KLS1-PTJ-15A-6.3A-N	6.3mm Stereo Plug To 2X3.5mm Mono Jack/ Nickel-plated
KLS1-PTJ-15A-6.3B-G	6.3mm Stereo Plug To 2X3.5mm Stereo Jack/ Gold-plated

Remark: Optional gold-plated nickel

Adaptor Series

KLS1-PTJ-16 (MONO Plug To RCA Jack)







ORDER INFORMATION

KLS's Part No.	Description
KLS1-PTJ-16-2.5-N	2.5mm MONO Plug To 2 Pin RCA Jack/ Nickel-plated
KLS1-PTJ-16-3.5-N	3.5mm MONO Plug To 2 Pin RCA Jack/ Nickel-plated
KLS1-PTJ-16-6.3-N	6.3mm MONO Plug To 2 Pin RCA Jack/ Nickel-plated
KLS1-PTJ-16-2.5-G	2.5mm MONO Plug To 2 Pin RCA Jack/ Gold-plated
KLS1-PTJ-16-3.5-G	3.5mm MONO Plug To 2 Pin RCA Jack/ Gold-plated
KLS1-PTJ-16-6.3-G	6.3mm MONO Plug To 2 Pin RCA Jack/ Gold-plated

Remark: Optional gold-plated nickel

Adaptor Series

KLS1-PTJ-16A (Stereo Plug To RCA Jack)



ORDER INFORMATION

KLS's Part No.	Description
KLS1-PTJ-16A-2.5-N	2.5mm Stereo Plug To 2 Pin RCA Jack/ Nickel-plated
KLS1-PTJ-16A-3.5-N	3.5mm Stereo Plug To 2 Pin RCA Jack/ Nickel-plated
KLS1-PTJ-16A-6.3-N	6.3mm Stereo Plug To 2 Pin RCA Jack/ Nickel-plated
KLS1-PTJ-16A-2.5-G	2.5mm Stereo Plug To 2 Pin RCA Jack/ Gold-plated
KLS1-PTJ-16A-3.5-G	3.5mm Stereo Plug To 2 Pin RCA Jack/ Gold-plated
KLS1-PTJ-16A-6.3-G	6.3mm Stereo Plug To 2 Pin RCA Jack/ Gold-plated

Remark: Optional gold-plated nickel

Adaptor Series

KLS1-PTJ-17 (RCA Plug To RCA Jack)



ORDER INFORMATION

KLS's Part No.	Description
KLS1-PTJ-17-N	Metal RCA Plug To RCA Jack/ Nickel-plated
KLS1-PTJ-17-G	Metal RCA Plug To RCA Jack/ Gold-plated

Remark: Optional gold-plated nickel

Adaptor Series

KLS1-PTJ-18 (MONO Plug To RCA Jack)





ORDER INFORMATION

KLS's Part No.	Description
KLS1-PLJ-18-3.5A-N	3.5mm Mono Plug To 2 Pin RCA Jack / Nickel-plated
KLS1-PLJ-18-3.5B-G	3.5mm Mono Plug To 2 Pin RCA Jack / Gold-plated
KLS1-PLJ-18-6.3A-N	6.3mm Mono Plug To 2 Pin RCA Jack / Nickel-plated
KLS1-PLJ-18-6.3B-G	6.3mm Mono Plug To 2 Pin RCA Jack / Gold-plated

Remark: Optional gold-plated nickel

Adaptor Series

KLS1-PTJ-18A (Stereo Plug To RCA Jack)





ORDER INFORMATION

KLS's Part No.	Description
KLS1-PLJ-18A-3.5A-N	3.5mm Stereo Plug To 2 Pin RCA Jack / Nickel-plated
KLS1-PLJ-18A-3.5B-G	3.5mm Stereo Plug To 2 Pin RCA Jack / Gold-plated
KLS1-PLJ-18A-6.3A-N	6.3mm Stereo Plug To 2 Pin RCA Jack / Nickel-plated
KLS1-PLJ-18A-6.3B-G	6.3mm Stereo Plug To 2 Pin RCA Jack / Gold-plated

Remark: Optional gold-plated nickel

Adaptor Series

KLS1-PTA-01 (MONO Plug To XLR)



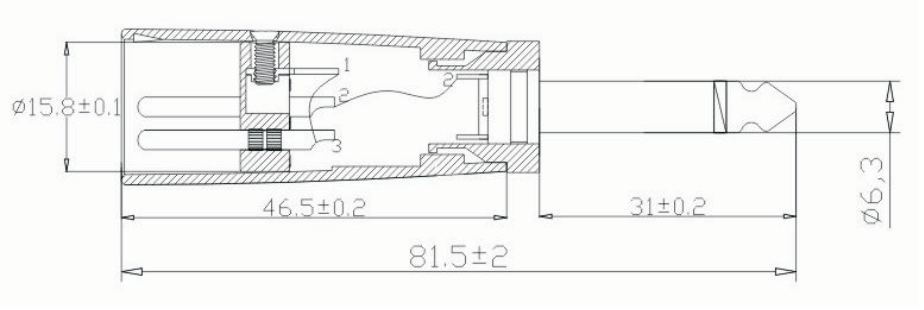

KLS1-PTA-01-M-SIZE:



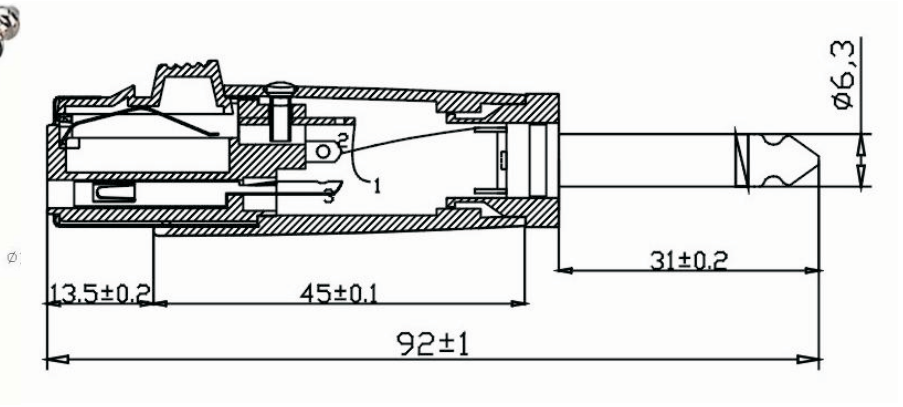

ORDER INFORMATION

Product No. : KLS1-PTA-01-F

- **Pos. NO.**
- **Part NO.**
- **01-01 MONO Plug To XLR Type**
- **M-Male F-Female**

Adaptor Series

KLS1-PTA-01A (Stereo Plug To XLR)



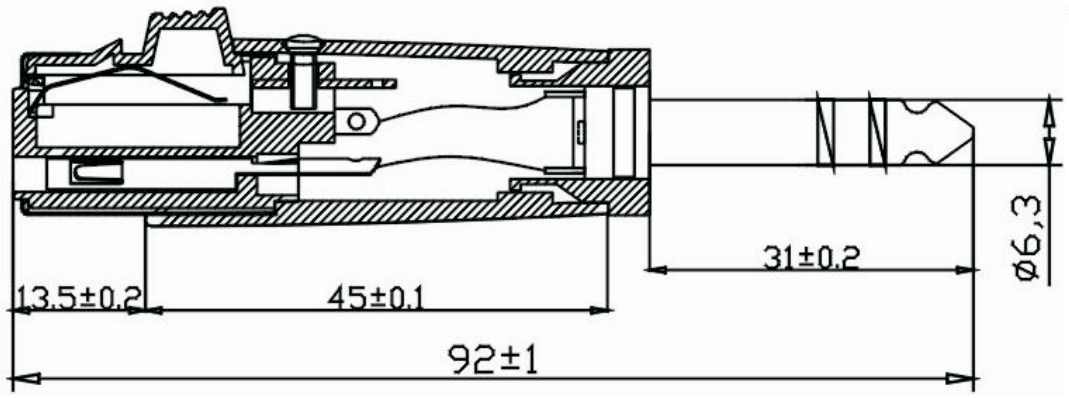

KLS1-PTA-01A-M-SIZE:

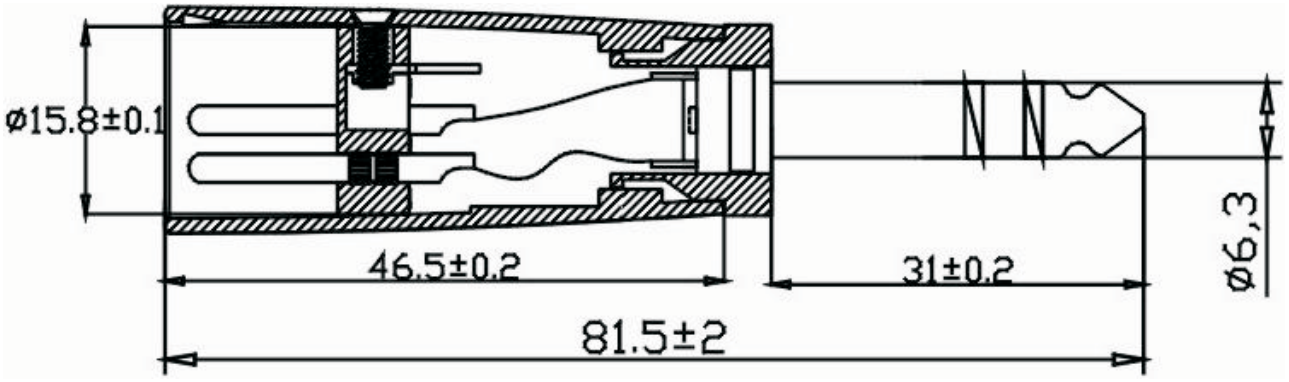

ORDER INFORMATION

Product No. : KLS1-PTA-01A-F

Pos. NO.
Part NO.
01A-01A Stereo Plug To XLR Type
M-Male F-Female

Adaptor Series

KLS1-PTA-02



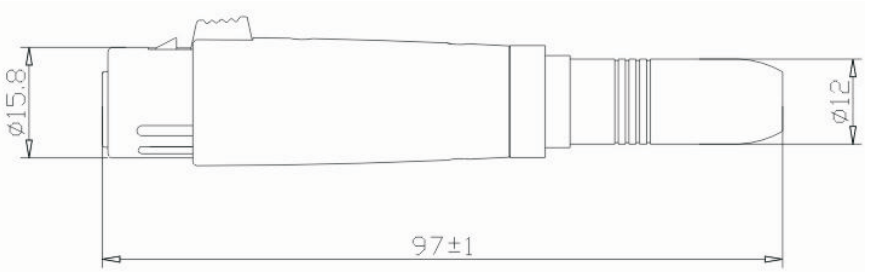

KLS1-PTA-02-M:



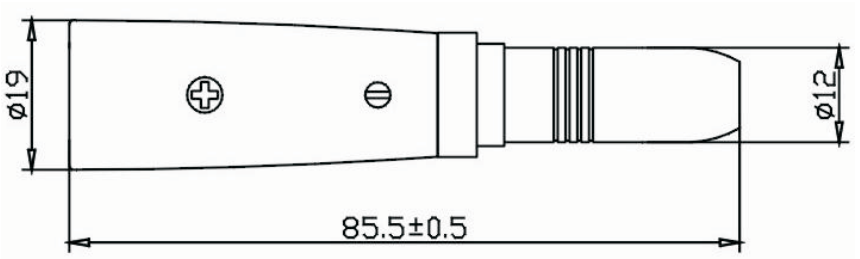

ORDER INFORMATION

Product No. : KLS1-PTA-02-F

Pos. NO.

Part NO.

02-02 Type

M-Male F-Female

Adaptor Series

KLS1-PTA-03



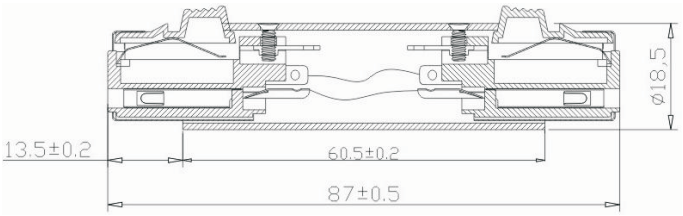

KLS1-PTA-03-F-M:



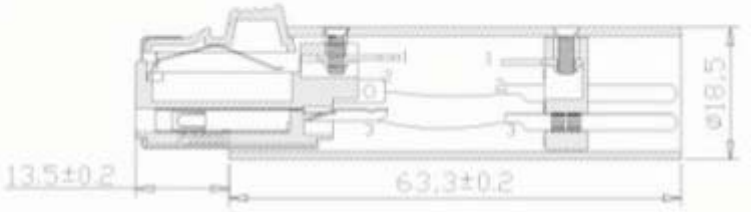

KLS1-PTA-03-M-M:



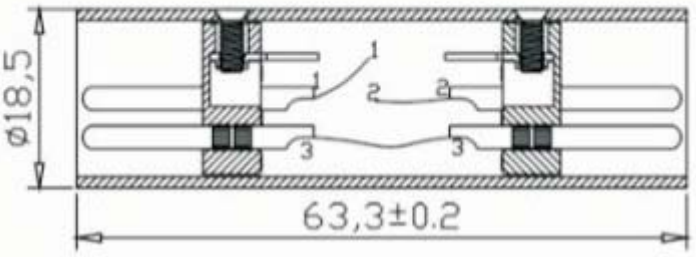

ORDER INFORMATION

Product No. : KLS1-PTA-03-F-F

- Pos. NO.
- Part NO.
- 03-03 Type
- M-Male F-Female
- M-Male F-Female

Adaptor Series

KLS1-PTA-04

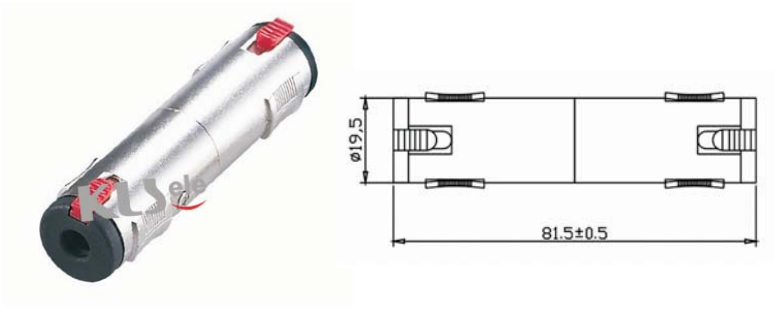

KLS1-PTA-04B:

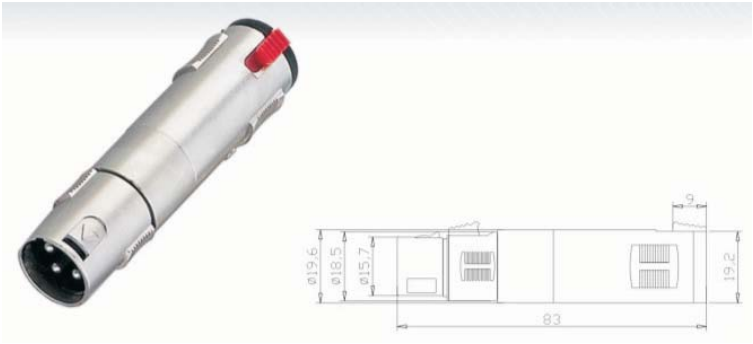

KLS1-PTA-04C:

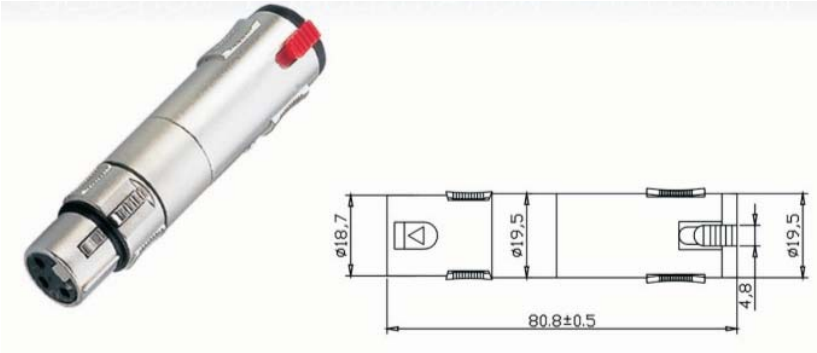

ORDER INFORMATION

Product No. : KLS1-PTA-04A-F-F

- Pos. NO.
- Part NO.
- 04A 04A Or 04B Or 04C Type
- M-Male F-Female
- M-Male F-Female

Adaptor Series

KLS1-PTA-05



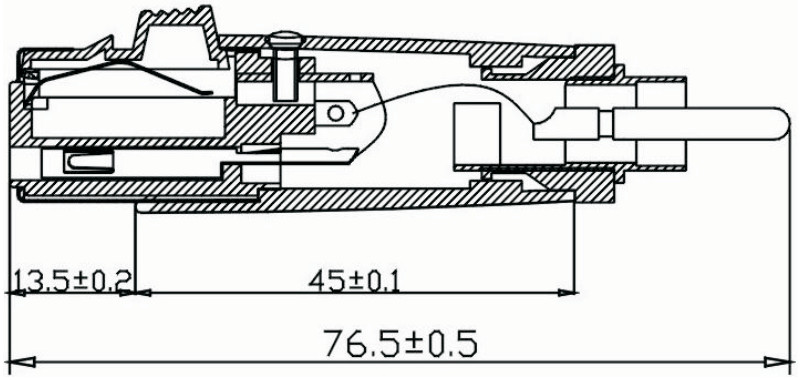

KLS1-PTA-05B:

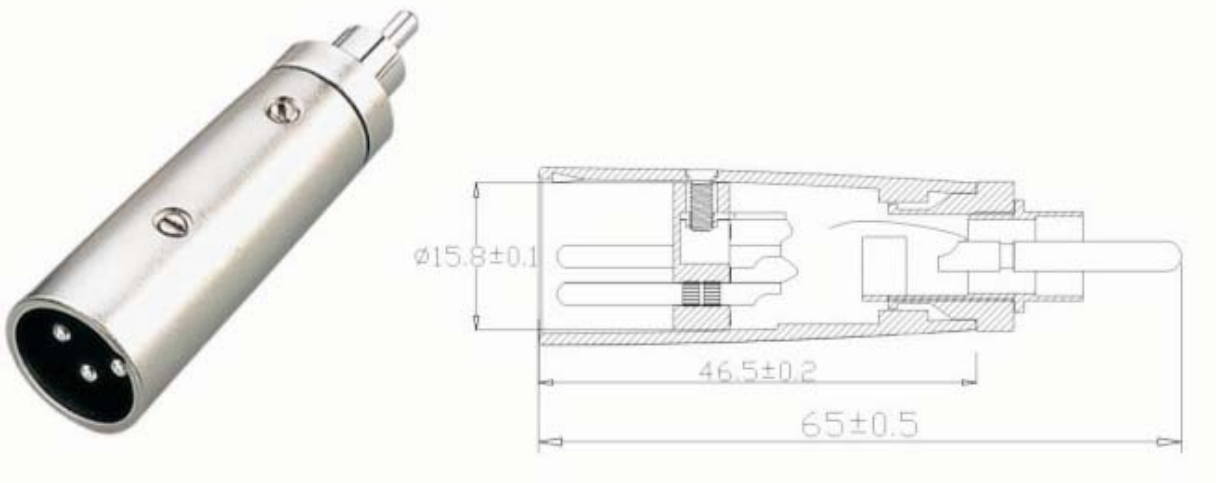

ORDER INFORMATION

Product No. : KLS1-PTA-05A-F-F

Pos. NO.
Part NO.
05A=05A Or 05B Type
M-Male F-Female
M-Male F-Female

Adaptor Series

KLS1-PTJ-19



ORDER INFORMATION

Product NO.:KLS1-PTJ-19

Pos. NO.
Part NO.

All specification & dimensions are subject to change, Please call your nearest KLS sales represesntative for update information

Adaptor Series

KLS1-PTJ-20



ORDER INFORMATION

Product NO.:KLS1-PTJ-20

Pos. NO.
Part NO.

All specification & dimensions are subject to change, Please call your nearest KLS sales represesntative for update information

Adaptor Series

KLS1-PTJ-21



ORDER INFORMATION

Product NO.:KLS1-PTJ-21

Pos. NO.
Part NO.

All specification & dimensions are subject to change, Please call your nearest KLS sales represesntative for update information

Adaptor Series

KLS1-PTJ-22 (BNC Plug to RCA Plug)



ORDER INFORMATION

Product NO.:KLS1-PTJ-22

Pos. NO.
Part NO.

All specification & dimensions are subject to change, Please call your nearest KLS sales represesntative for update information

Mini Din Connectors*Din Connectors Series

KLS1-157 (Din Jack)



MATERIAL
Insulator: PBT UL 94V-0
Shell: Brass, Nickel / Tin Plated or Tin Plated
Contact: Phosphor Bronze,Gold /Tin plated

ENVIRONMENTAL
Operating Temperature:-55 C ~ + 105 C

ELECTRICAL
Contact current Rating:1 A 100V AC
Dielectric Withstanding:250V AC 1 min.
Insulation Resistance:5000M OHM min AT 500V DC
CONTACT RESISTANCE:30m ohm Max.

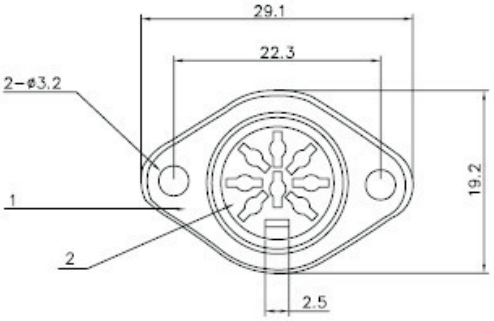

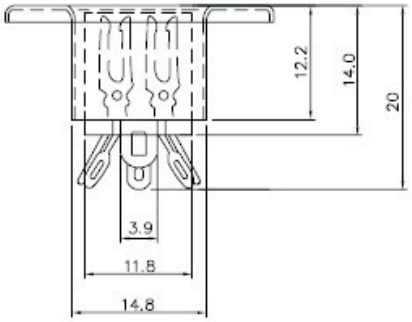

MATERIALS
1.SHELL: STEEL,NICKEL PLATED
2.HOUSING: PBT
3.PIN: BRASS,NICKEL PLATED

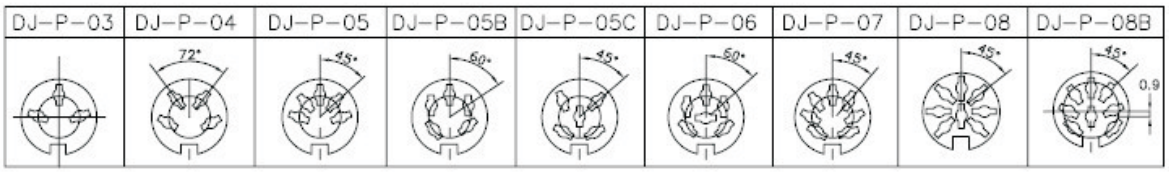

KLS1-157B:



ORDER INFORMATION

Product No. : KLS1-157A-04-B

Pos. NO.
Type:157A or 157B
04=4 PIN Or-3 Pin,5 Pin,6 Pin,7 Pin,8 Pin
B=Black

Mini Din Connectors*Din Connectors Series

I

KLS1-158 (Din Jack)



MATERIAL
Insulator: PBT UL 94V-0
Shell: Brass, Nickel / Tin Plated or Tin Plated
Contact: Phosphor Bronze,Gold /Tin plated

ENVIRONMENTAL
Operating Temperature:-55 C ~ + 105 C

ELECTRICAL
Contact current Rating:1 A 100V AC
Dielectric Withstanding:250V AC 1 min.
Insulation Resistance:5000M OHM min AT 500V DC
CONTACT RESISTANCE:30m ohm Max.

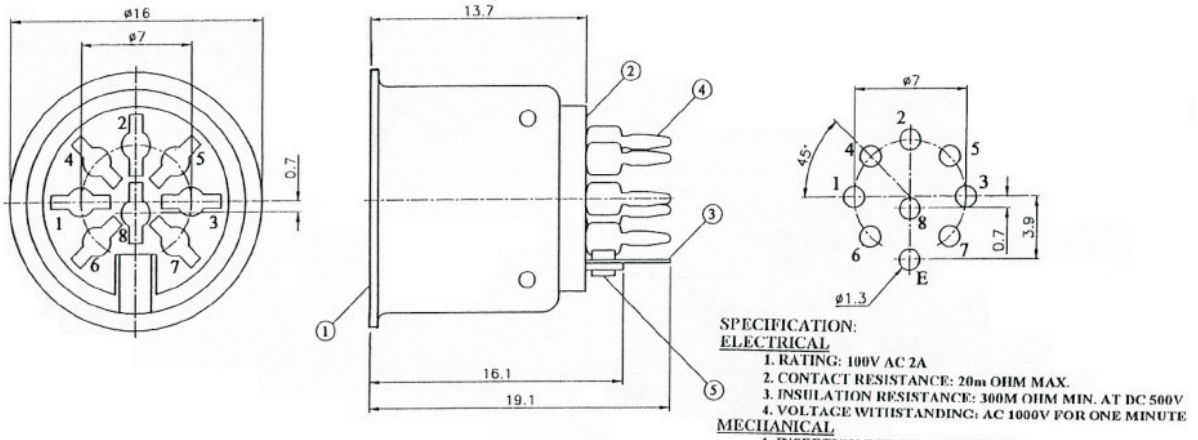

SPECIFICATION:
ELECTRICAL
1. RATING: 100V AC 2A
2. CONTACT RESISTANCE: 20m OHM MAX.
3. INSULATION RESISTANCE: 300M OHM MIN. AT DC 500V
4. VOLTAGE WITHSTANDING: AC 1000V FOR ONE MINUTE
MECHANICAL
1. INSERTION FORCE: 6.5KGS MAX.
2. WITHDRAWAL FORCE: 1-5KGS

ARRANGEMENT OF CONTACTS				
MODEL NO.	DJ-D-04	DJ-D-06	DJ-D-07	DJ-D-08
HOLE LAYOUT				

P/N	PART NAME	Q'TY	MATERIAL	PLATING	REMARKS
5.	RIVET	1	AL	NICKEL PLATED	
4.	CONTACT TERMINAL	8	BRASS 0.7t	Pb10%, Sn90%	
3.	EARTH TERMINAL	1	PBSR-H 0.25t	Pb10%, Sn90%	
2.	INSULATOR	1	P.B.T.	VALOX 420-SEO	UL94V-0
1.	SOCKET CASE	1	SPCC-SD 0.4t	NICKEL PLATED	

DJ-D-xx-LF
LEADFREE
RoHS Compliant

ORDER INFORMATION

Product No. : KLS1-158A-04-B

- **Pos. NO.**
- **Type:158A**
- **04=4 PIN Or-6 Pin,7 Pin,8 Pin**
- **B=Black**

Mini Din Connectors*Din Connectors Series

KLS1-159 (Din Jack)



MATERIAL
Insulator: PBT UL 94V-0
Shell: Brass, Nickel / Tin Plated or Tin Plated
Contact: Phosphor Bronze,Gold /Tin plated

ENVIRONMENTAL
Operating Temperature:-55 C ~ + 105 C

ELECTRICAL
Contact current Rating:1 A 100V AC
Dielectric Withstanding:250V AC 1 min.
Insulation Resistance:5000M OHM min AT 500V DC
CONTACT RESISTANCE:30m ohm Max.

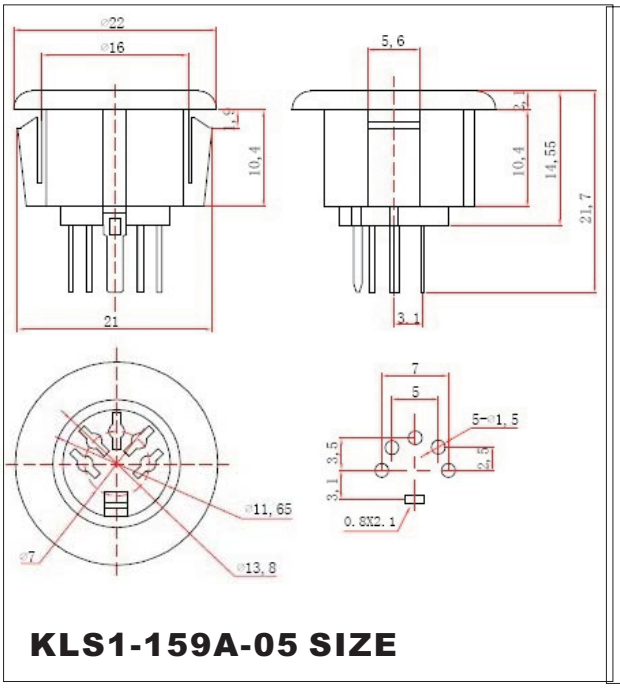

KLS1-159A-05 SIZE

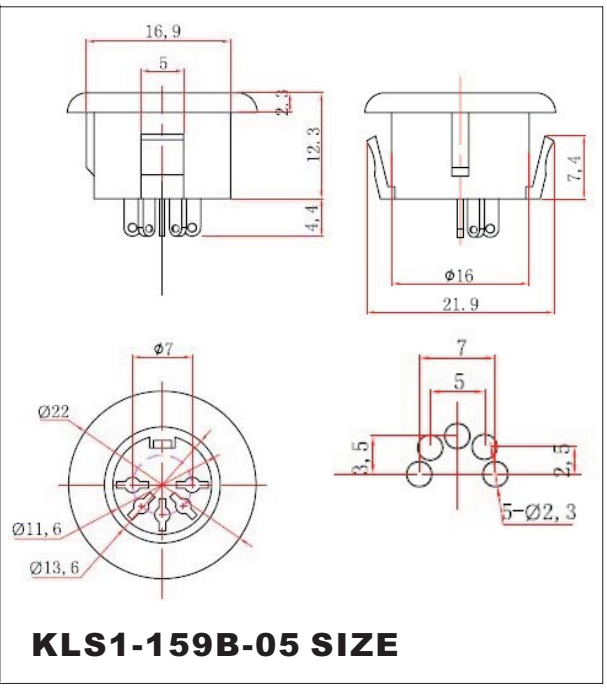

KLS1-159B-05 SIZE

ORDER INFORMATION

Product No. : KLS1-159A-05-B

- Pos. NO.
- Type:159A or 159B
- 05=5 Pin
- B=Black

DIN JACK Series

KLS1-291A DIN jack Without Shell Series

MATERIAL
Insulator: PBT UL 94V-0 or PPS
Shell: Brass, Nickel / Tin Plated or Tin Plated
Contact: Phosphor Bronze, Gold / Tin plated
ENVIRONMENTAL
Operating Temperature: -25ºC ~ + 70ºC

ELECTRICAL
Contact current Rating: 1 Amp/100VAC
2Amp/12VDC
Dielectric Withstanding: AC 1000V / min.
Insulation Resistance: 5000M OHM min AT 500V DC
Contact Resistance: 30m ohm Max.
Insertion force: 4.5Kgf Max
Withdrawal Force:0.8Kgf Min
Life:5000 cycles



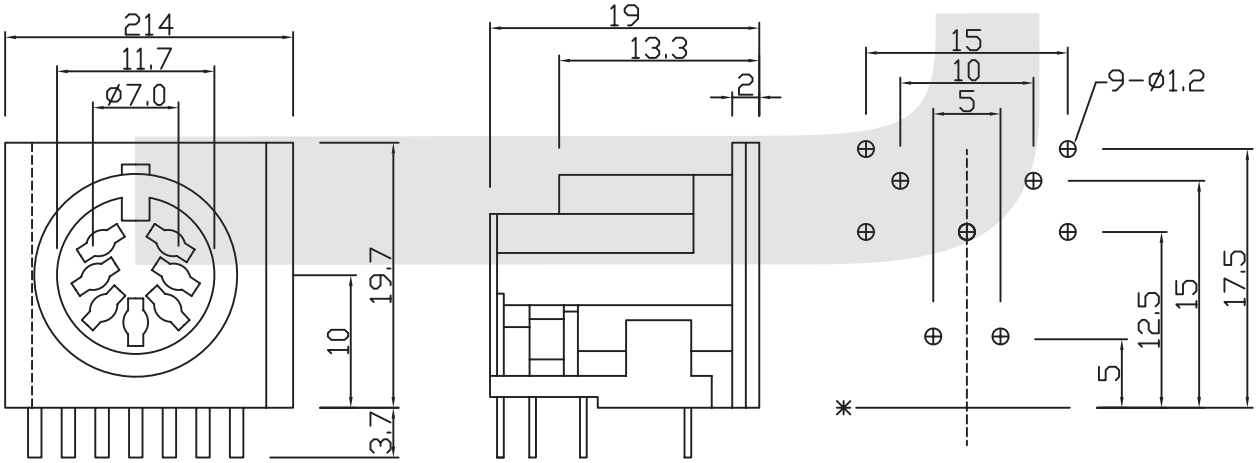

ORDER INFORMATION

Product NO.: KLS1 - 291A - 4 B

Pos. NO.
DIN JACK Without ShellSeries
Pin Number:
3=3P 4=4P 5=5P 6=6P 7=7P 8=8P 13=13P
Color: B=Black

MINI DIN JACK Series

KLS1-288L Mini din jack With Shell Series

MATERIAL
Insulator: PBT UL 94V-0 or PPS
Shell: Brass, Nickel / Tin Plated or Tin Plated
Contact: Phosphor Bronze, Gold / Tin plated
ENVIRONMENTAL
Operating Temperature: -25ºC ~ + 70ºC

ELECTRICAL
Contact current Rating: 1 Amp/100VAC
2Amp/12VDC
Dielectric Withstanding: AC 1000V / min.
Insulation Resistance: 5000M OHM min AT 500V DC
Contact Resistance: 30m ohm Max.
Insertion force: 4.5Kgf Max
Withdrawal Force:0.8Kgf Min
Life:5000 cycles



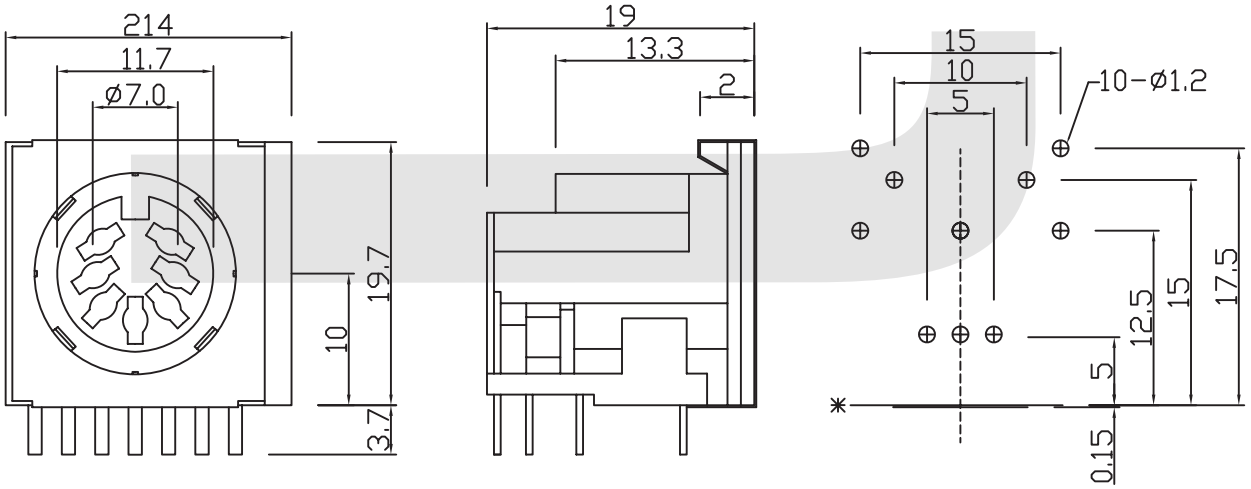

ORDER INFORMATION

Product NO.: KLS1 - 291L - 4 B

Pos. NO.
DIN JACK With ShellSeries

Pin Number:
3=3P 4=4P 5=5P 6=6P 7=7P 8=8P 13=13P

Color: B=Black

Mini Din Connectors*Din Connectors Series

KLS1-292 (Din Jack 5.0mm 10.0mm pitch)



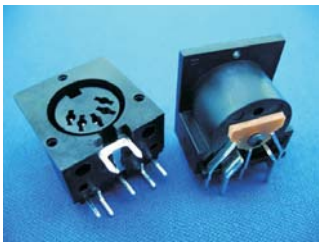

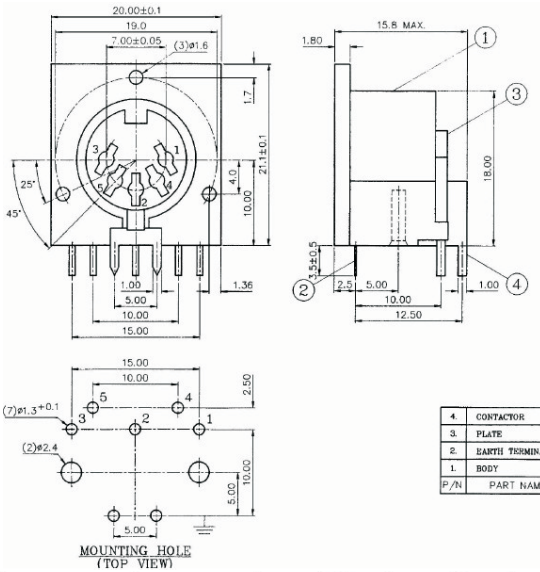

SPECIFICATIONS:
1. CONTACT RESISTANCE : 20m OHM MAX
2. INSULATION RESISTANCE : 100M OHM AT 500V D.C.
3. VOLTAGE WITHSTANDING : AC 500V 1 MINUTE .
4. INSERTION FORCE : 5.0KG MAX.
5. WITHDRAWAL FORCE : 1-3.5 KG
6. LIFE TEST : 5,000 CYCLES MIN. AFTER TESTING, CONTACT RESISTANCE SHALL NOT EXCEED 100m OHM .
7. CURRENT RATING : AC: 100V 2A
DC: 24V 1A

DJ-S5-05-LF
LEADFREE
RoHS Compliant

P/N	PART NAME	Q'TY	MATERIAL	PLATING	REMARKS
4.	CONTACTOR	5	BSR-H/2 0.7t	Sn	
3.	PLATE	1	BAKELITE	PL-PEM 1.4t	
2.	EARTH TERMINAL	1	PBSR-H 0.2t	Sn	
1.	BODY	1	P.B.T.		UL94V-0

KLS1-292L-05-B-10.0MM SIZE:

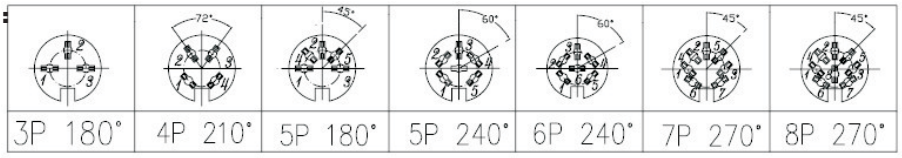

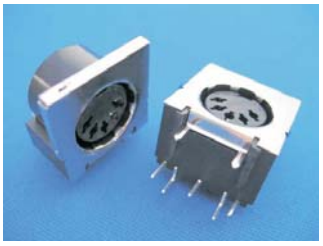

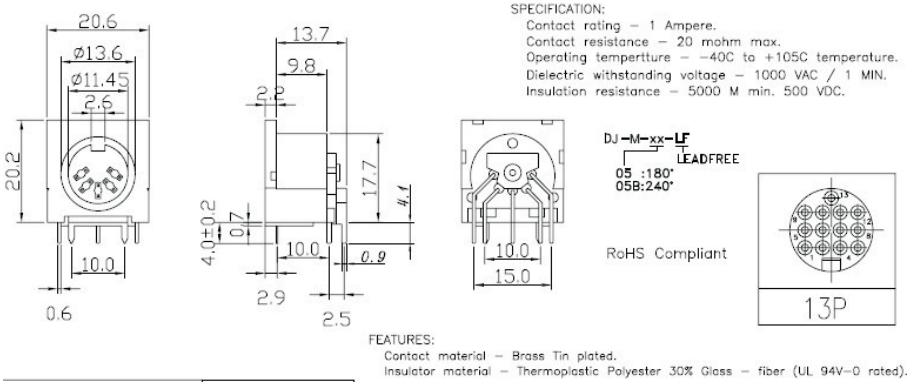

SPECIFICATION:
Contact rating – 1 Ampere.
Contact resistance – 20 mohm max.
Operating tempertture – -40C to +105C temperature.
Dielectric withstanding voltage – 1000 VAC / 1 MIN.
Insulation resistance – 5000 M min. 500 VDC.

DJ-M-xx-LF
LEADFREE
05 :180°
05B:240°

RoHS Compliant

FEATURES:
Contact material – Brass Tin plated.
Insulator material – Thermoplastic Polyester 30% Glass – fiber (UL 94V-0 rated).

ORDER INFORMATION

Product No. : KLS1-292L-05-B-5.0MM

Pos. NO.

223A=Without Phosphor Bronze Cover
292L=With steel Phosphor Bronze Cover
05=5PIN Or-3 Pin,4 Pin,6 Pin,7 Pin,8 Pin
B=Black
Pitch:10.0mm Or 5.0mm

Mini Din Connectors*Din Connectors Series

KLS1-293 (Din Jack 5.0mm pitch)

MATERIAL
Insulator: PBT UL 94V-0
Shell: Brass, Nickel / Tin Plated or Tin Plated
Contact: Phosphor Bronze,Gold /Tin plated

ENVIRONMENTAL
Operating Temperature:-55 C ~ + 105 C

ELECTRICAL
Contact current Rating:1 A 100V AC
Dielectric Withstanding:250V AC 1 min.
Insulation Resistance:5000M OHM min AT 500V DC
CONTACT RESISTANCE:30m ohm Max.



KLS1-293A Pitch:5.0mm SIZE:

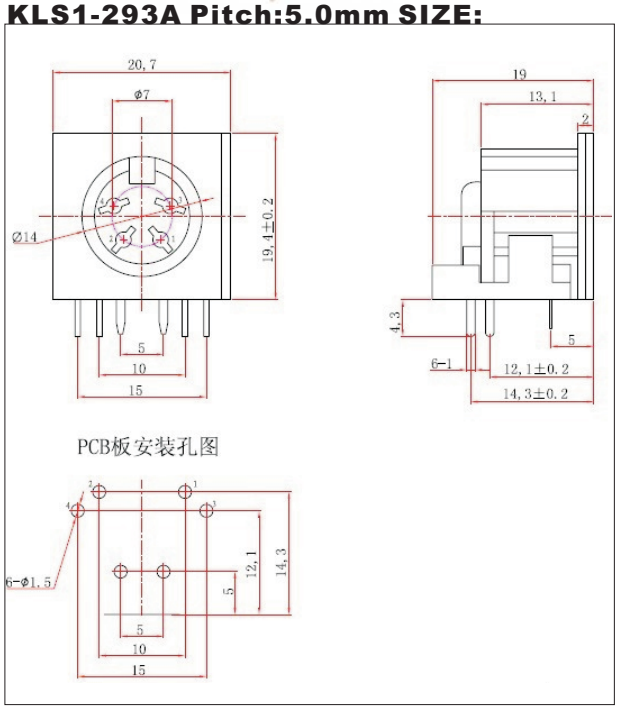



KLS1-293L Pitch:5.0mm TYPE:

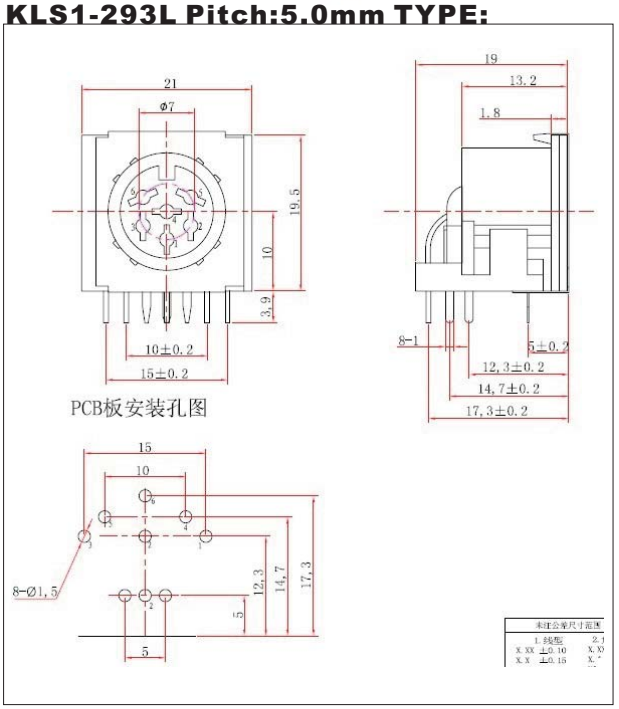

ORDER INFORMATION

Product No. : KLS1-293L-05-B-5.0MM

Pos. NO.
293A=Without Phosphor Bronze Cover
293L=With steel Phosphor Bronze Cover
05=5PIN Or-3 Pin,4 Pin,6 Pin,7 Pin,8 Pin
B=Black
Pitch:5.0mm

Mini Din Connectors*Din Connectors Series

KLS1-293 (Din Jack 10.0mm pitch)

KLS1-293A Pitch:10.0mm SIZE:

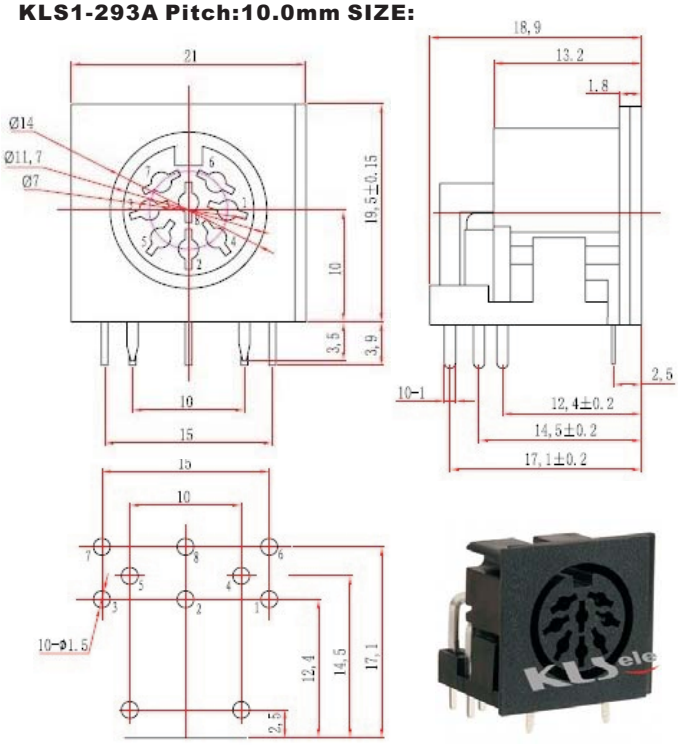

KLS1-293L Pitch:10.0mm TYPE:

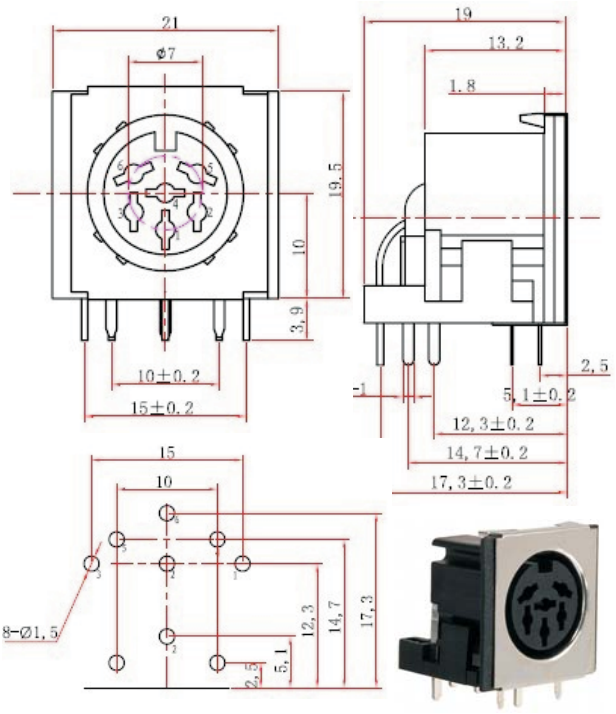

ORDER INFORMATION

Product No. : KLS1-293L-05-B-10.0MM

- Pos. NO.
- 293A=Without Phosphor Bronze Cover
- 293L=With steel Phosphor Bronze Cover
- 05=5PIN Or-3 Pin,4 Pin,6 Pin,7 Pin,8 Pin
- B=Black
- Pitch:10.0mm

All specification & dimensions are subject to change, Please call your nearest KLS sales representative for update information

Mini Din Connectors*Din Connectors Series

KLS1-296 (Din Plug and socket)



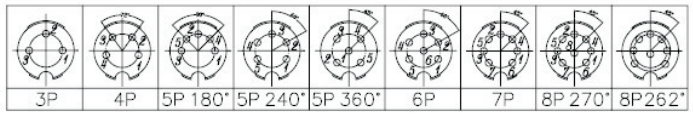

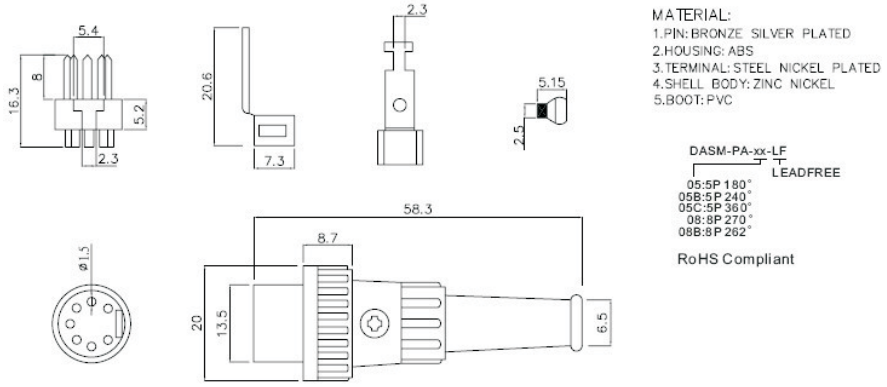

MATERIAL:
1.PIN: BRONZE SILVER PLATED
2.HOUSING: ABS
3.TERMINAL: STEEL NICKEL PLATED
4.SHELL BODY: ZINC NICKEL
5.BOOT: PVC

DASM-PA-xx-LF
LEADFREE
05:5P 180°
05B:5P 240°
05C:5P 360°
08:8P 270°
08B:8P 262°

RoHS Compliant

KLS1-296-S-SIZE:

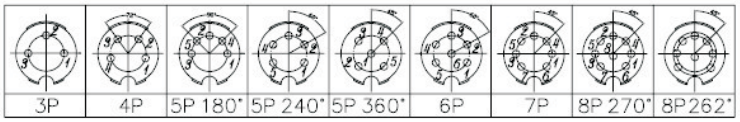

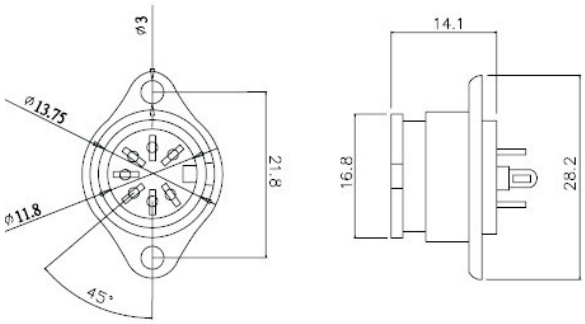

MATERIAL
SHELL: ZINC NICKEL PLATED
PIN: BRONZE,SILVER PLATED
HOUSING: BAKELITE.
GROUND PIN: BRONZE NICKEL PLATED.

SPECIFICATION
Rating:100V AC 1A max.
Contact Resistance:
Pins 30m OHM max.
Shell 50m OHM max.
Insulation Resistance
100M OHM at 500V DC min.
Voltage Withstand:
250V AC for 1 minute

DASM-JS-xx-LF
LEADFREE
05: 5P 180°
05B: 5P 240°
05C: 5P 360°
08: 8P 270°
08B: 8P 262°

ORDER INFORMATION

Product No. : KLS1-296-P-07

Pos. NO.
Series NO.
P-Plug S-Socket
07=7 PIN Or 3PIN 4PIN 5PIN 6PIN 8PIN

MINI DIN JACK Series

KLS1-294F MINI DIN Jack Solder assy with Cover Series

MATERIAL

A. BOOT : PVC
B. MIDDLE HOOD : ABS
C. METAL PART : COPPER , NICKEL PLATED
D. INSULATOR : PC
E. PIN CONTACT : COPPER , SILVER

SPECIFICATIONS

1. RATION: 100V AC 1A MAX or 12V DC 2A MAX.
2. INSULATION RESISTANCE: 50M OHM MIN at 250V DC.
3. DIELECTRIC STRENGTH: 250 V AC / 1 MINUTE.
4. CONTACT RESISTANCE: 30M OHM MAX.
5. INSERTION FORCE: 4.5KG MAX.
6. WITHDRAWAL FORCE: 09.KG ~ 3KG.



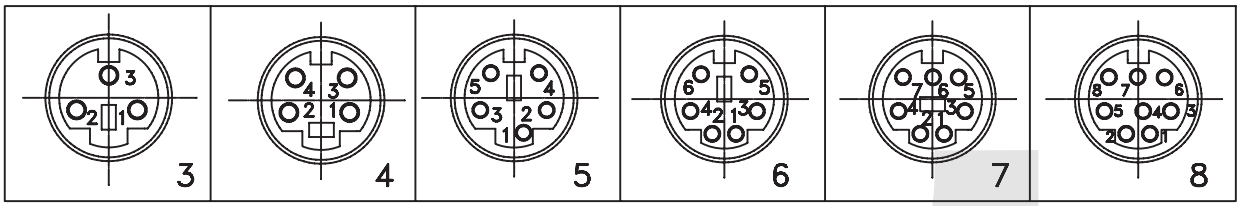

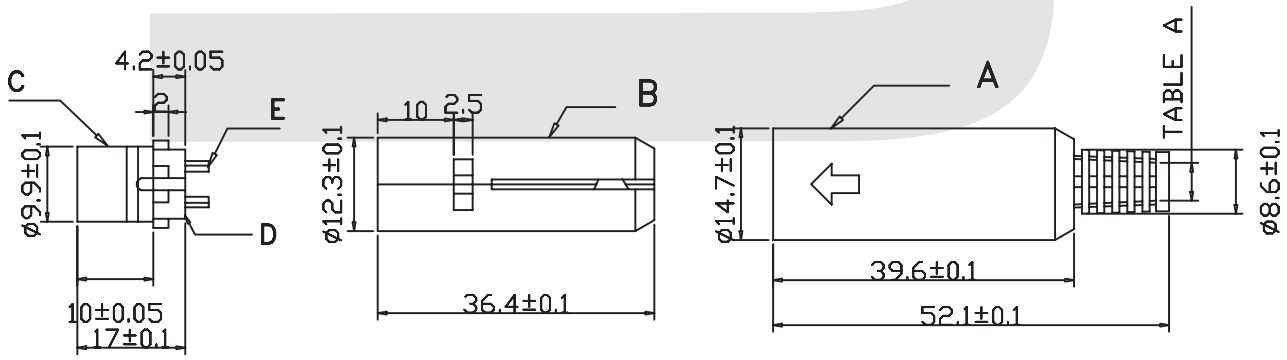

	7.0ø BACK SHELL
	6.0ø BACK SHELL
X	5.0ø BACK SHELL (STANDARD)
	COVER DIM.

TABLE A

ORDER INFORMATION

Product NO.: KLS1 - 294 - F 4 - B

- Pos. NO.
- MINI DIN Jack Solder assy with Cover Series
- Pin Number: 3=3P 4=4P 5=5P 6=6P 7=7P 8=8P
- M=Male F=Female
- Color : B=Black G=Green P=Purple

MINI DIN JACK Series

KLS1-294M MINI DIN Jack Solder assy with Cover Series

MATERIAL

A. BOOT: PVC
B. SHELL : ABS
C. METAL SHIELD : BRASS NICKEL PLATED
D. HOUSING : NYLON66+GLASS Fiber
E. CONTACT : BRASS SILVER PLATED

Specification

1. RATION: 100V AC 1A MAX or 12V DC 2A MAX.
2. INSULATION RESISTANCE: 50M OHM MIN at 250V DC.
3. DIELECTRIC STRENGTH: 250 V AC / 1 MINUTE.
4. CONTACT RESISTANCE: 30M OHM MAX.
5. INSERTION FORCE: 4.5KG MAX.
6. WITHDRAWAL FORCE: 09.KG ~ 3KG.



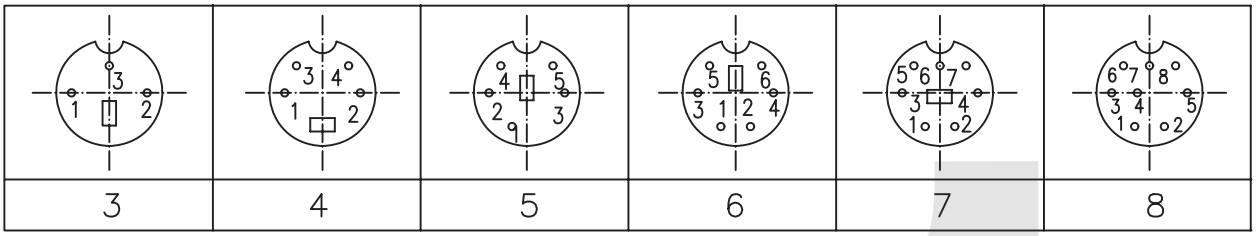

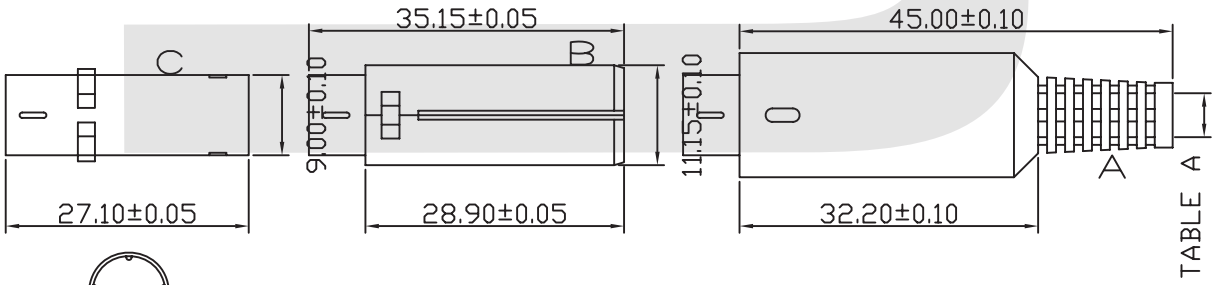

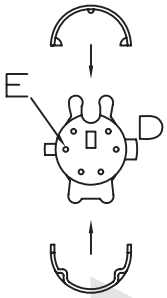

	7.0ø BACK SHELL
	6.0ø BACK SHELL
X	5.0ø BACK SHELL (STANDARD)
	COVER DIM.

TABLE A

ORDER INFORMATION

Product NO.: KLS1 - 294 - M 4 - B

- Pos. NO.
- MINI DIN Jack Solder assy with Cover Series
- Pin Number: 3=3P 4=4P 5=5P 6=6P 7=7P 8=8P
- M=Male F=Female
- Color : B=Black G=Green P=Purple

MINI DIN JACK Series

KLS1-155 MINI DIN Jack Right Angle Single Type

MATERIAL
Insulator: PBT+Glass Fiber, UL94v-0
Contact: Phosphor Bronze
Shell: Spcc, Tin plated

Specification
Current rating: 1 A Max.
Dielectric withstanding voltage: 750 V (AC) for 1 min.
Contact resistance: 30 mΩ Max.
Insulation resistance: 1000 MΩ Min.
Temperature range:-25°C ~ + 70°C

Finishes
contacts: Gold flashed 1u ", 3u", 5u ", 10u", 15u ", 30u".
Shell: Nickel, tin or gold plated



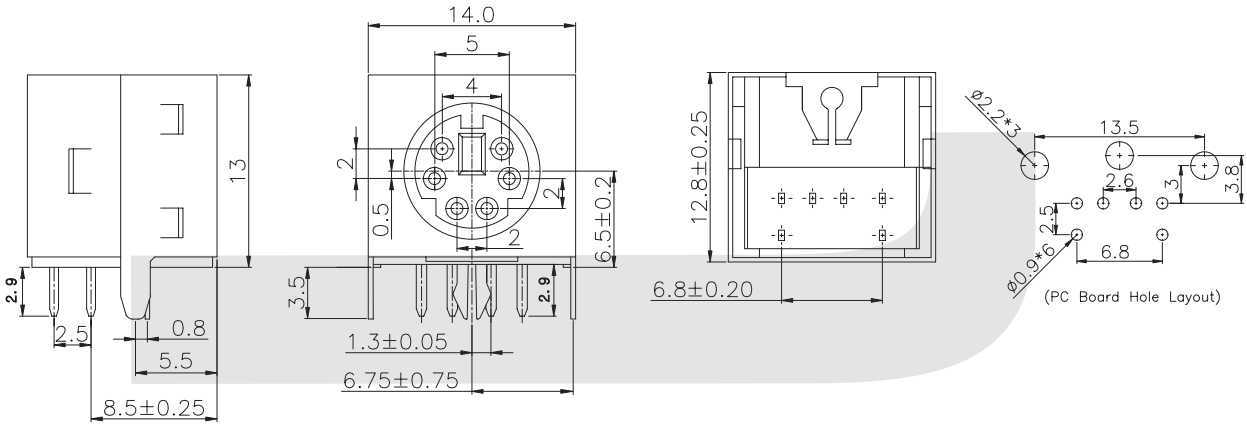

Without shrapnel

3 PIN	4 PIN	5 PIN	6 PIN	7 PIN	8 PIN
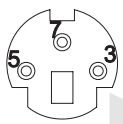	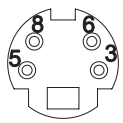	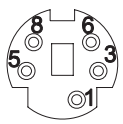		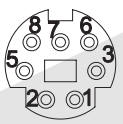	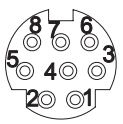

ORDER INFORMATION

Product NO.: KLS1 - 155 - 4 G - 0

- Pos. NO.
- MINI DIN Jack Right Angle Single Type
- Pin Number: 3=3P 4=4P 5=5P 6=6P 7=7P 8=8P
- Color: B=Black G=Green P=Purple
- Shrapnel 0: Without shrapnel 1: With shrapnel

MINI DIN JACK Series

KLS1-155 MINI DIN Jack Right Angle Single Type

I

MATERIAL
Insulator: PBT+Glass Fiber, UL94v-0
Contact: Phosphor Bronze
Shell: Spcc, Tin plated

Specification
Current rating: 1 A Max.
Dielectric withstanding voltage: 750 V (AC) for 1 min.
Contact resistance: 30 mΩ Max.
Insulation resistance: 1000 MΩ Min.
Temperature range:-25°C ~ + 70°C

Finishes
contacts: Gold flashed 1u ", 3u", 5u ", 10u", 15u ", 30u".
Shell: Nickel, tin or gold plated



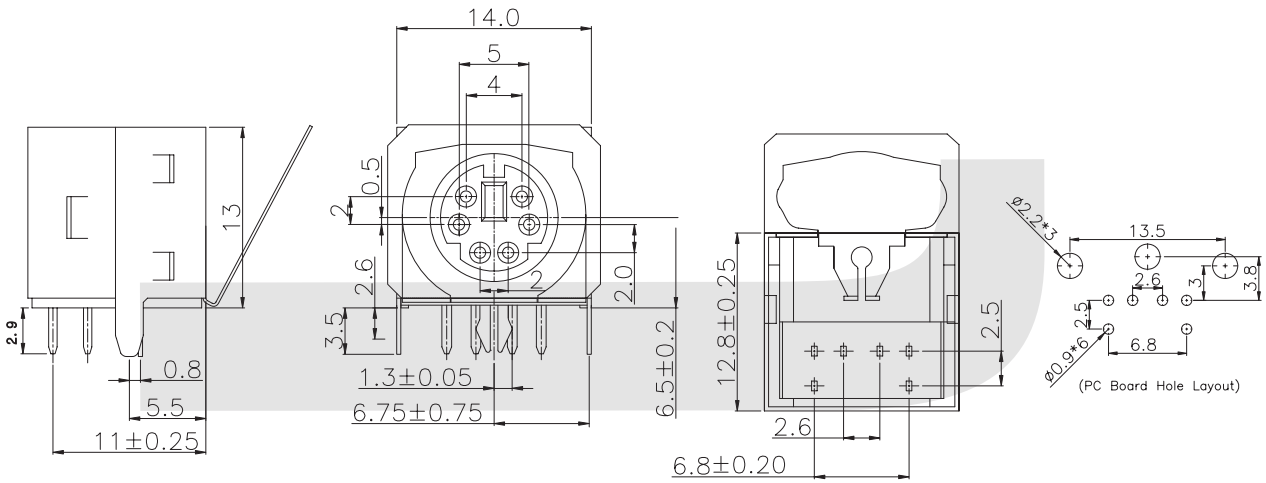

With shrapnel

3 PIN	4 PIN	5 PIN	6 PIN	7 PIN	8 PIN
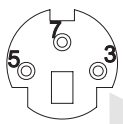	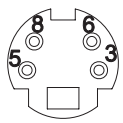	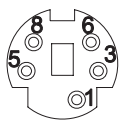		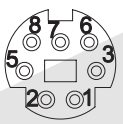	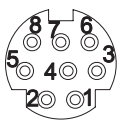

ORDER INFORMATION

Product NO.: KLS1 - 155 - 4 G - 0

- Pos. NO.
- MINI DIN Jack Right Angle Single Type
- Pin Number: 3=3P 4=4P 5=5P 6=6P 7=7P 8=8P
- Color : B=Black G=Green P=Purple
- Shrapnel: 0 : Without shrapnel; 1 : With shrapnel

MINI DIN JACK Series

KLS1-155A MINI DIN Jack Right Angle Double Type

MATERIAL
Insulator: PBT+Glass Fiber, UL94v-0
Contact: Phosphor Bronze
Shell: Spcc, Tin plated

Specification
Current rating: 1 A Max.
Dielectric withstanding voltage: 750 V (AC) for 1 min.
Contact resistance: 30 mΩ Max.
Insulation resistance: 1000 MΩ Min.
Temperature range:-40°C ~ + 105°C

Finishes
contacts: Gold flashed 1u ", 3u", 5u ", 10u", 15u ", 30u".
Shell: Nickel, tin or gold plated



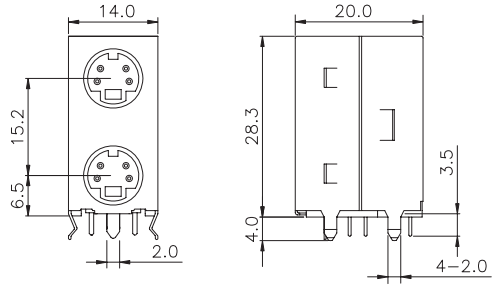

Without shrapnel

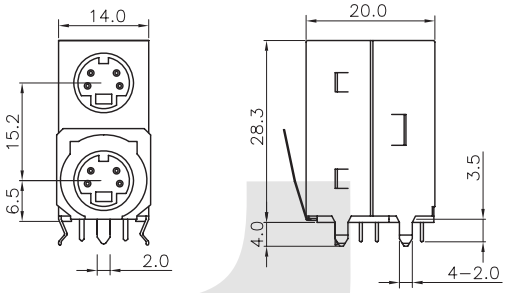

With shrapnel

ARRANGEMENT OF CONTACT	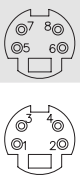	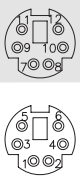	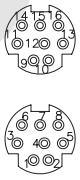
POS. NO.	4PIN/4PIN	6PIN/6PIN	8PIN/8PIN
P.C.B. LAYOUT (BOTTOM VIEW)	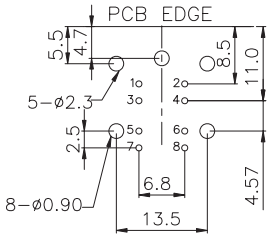	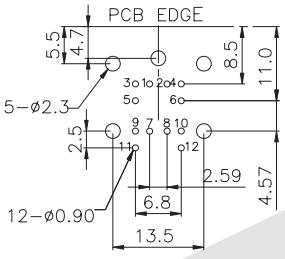	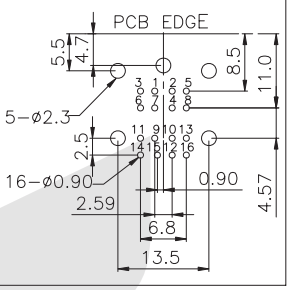

ORDER INFORMATION

Product NO.: KLS1 - 155A - 44 G/P - 0

Pos. NO.
MINI DIN Jack Right Angle Double Type
Pin Number: 44=4/4P 64=6/4P 84=8/4P
46=4/6P 66=6/6P 86=8/6P
48=4/8P 68=6/8P 88=8/8P
Color : G/P=Green+Purple
G/B=Green+Black B/B=Black+Black

Shrapnel
0: Without shrapnel
1: With shrapnel

Mini Din Connectors*Din Connectors Series

KLS1-156A (Mini Din Jack)



MATERIAL
Insulator: PBT UL 94V-0
Shell: Brass, Nickel / Tin Plated or Tin Plated
Contact: Phosphor Bronze,Gold /Tin plated

ENVIRONMENTAL
Operating Temperature:-55 C ~ + 105 C

ELECTRICAL
Contact current Rating:1 A 100V AC
Dielectric Withstanding:250V AC 1 min.
Insulation Resistance:5000M OHM min AT 500V DC
CONTACT RESISTANCE:30m ohm Max.

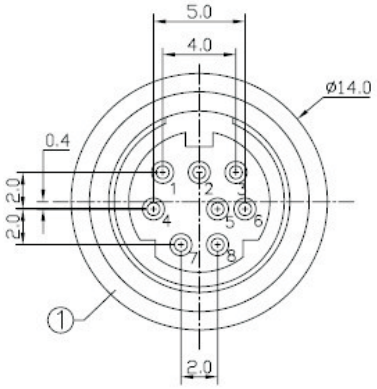

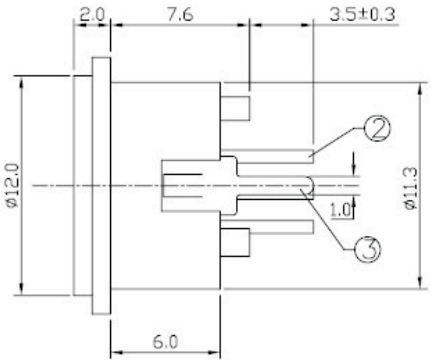

SCHEMATIC DIAGRAM

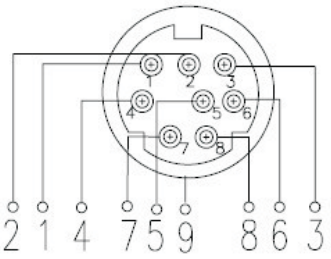

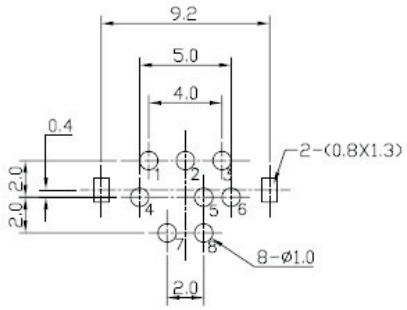

MDD-S-08-LF
LEADFREE

RoHS Compliant

ORDER INFORMATION

Product No. : KLS1-156A-04-B

Pos. NO.
Series NO.
04=4 PIN Or-3 Pin,5 Pin,6 Pin,7 Pin,8 Pin
B=Black

MINI DIN JACK Series

KLS1-285A Mini din jack Without Shell Series

MATERIAL

Insulator: PBT UL 94V-0 or PPS
Shell: Brass, Nickel / Tin Plated or Tin Plated
Contact: Phosphor Bronze, Gold / Tin plated
ENVIRONMENTAL
Operating Temperature: -25°C ~ + 70°C

ELECTRICAL

Contact current Rating: 1 Amp/100VAC
2Amp/12VDC
Dielectric Withstanding: AC 1000V / min.
Insulation Resistance: 5000M OHM min AT 500V DC
Contact Resistance: 30m ohm Max.
Insertion force: 4.5Kgf Max
Withdrawal Force:0.8Kgf Min
Life:5000 cycles



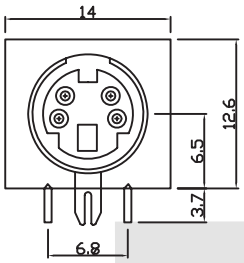

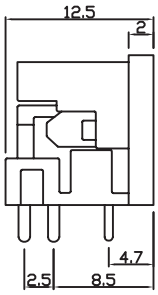

ARRANGEMENTT OF OONTACTS			
WO. OF OONTACTS	3	4	5
PCB LAYOUT	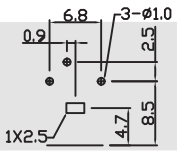	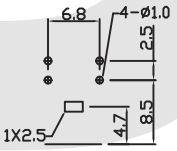	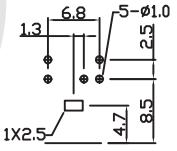
ARRANGEMENTT OF OONTACTS			
WO. OF OONTACTS	6	7	8
PCB LAYOUT	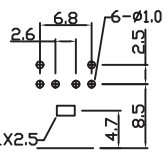	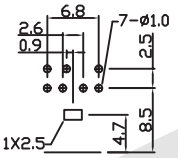	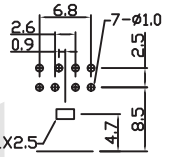

ORDER INFORMATION

Product NO.: KLS1 - 285A - 4 B

Pos. NO.
Mini DIN JACK Without ShellSeries
Pin Number:
3=3P 4=4P 5=5P 6=6P 7=7P 8=8P
Color: B=Black G=Green

MINI DIN JACK Series

KLS1-285L Mini din jack With Shell Series

MATERIAL

Insulator: PBT UL 94V-0 or PPS
Shell: Brass, Nickel / Tin Plated or Tin Plated
Contact: Phosphor Bronze, Gold / Tin plated
ENVIRONMENTAL
Operating Temperature: -25°C ~ + 70°C

ELECTRICAL

Contact current Rating: 1 Amp/100VAC
2Amp/12VDC
Dielectric Withstanding: AC 1000V / min.
Insulation Resistance: 5000M OHM min AT 500V DC
Contact Resistance: 30m ohm Max.
Insertion force: 4.5Kgf Max
Withdrawal Force:0.8Kgf Min
Life:5000 cycles



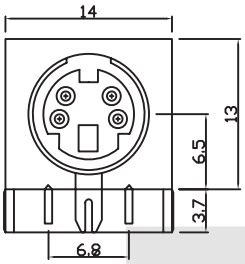

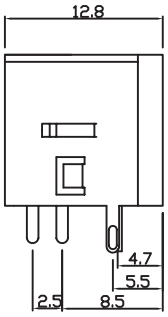

ARRANGEMENTT OF OONTACTS			
MO. OF OONTACTS	3	4	5
PCB LAYOUT	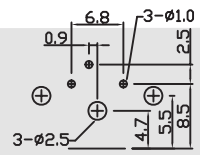	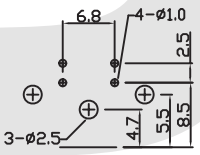	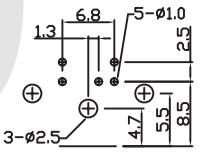
ARRANGEMENTT OF OONTACTS			
MO. OF OONTACTS	6	7	8
PCB LAYOUT	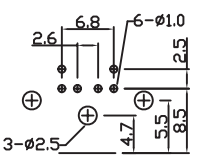	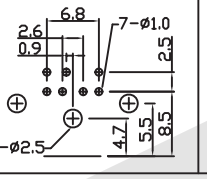	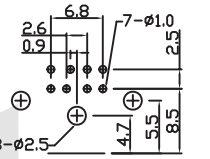

ORDER INFORMATION

Product NO.: KLS1 - 285L - 4 B

Pos. NO.
Mini DIN JACK With Shell Series
Pin Number:
3=3P 4=4P 5=5P 6=6P 7=7P 8=8P
Color: B=Black G=Green

REV	LTR	DESCRIPTION	DATE	REVISER	APPD

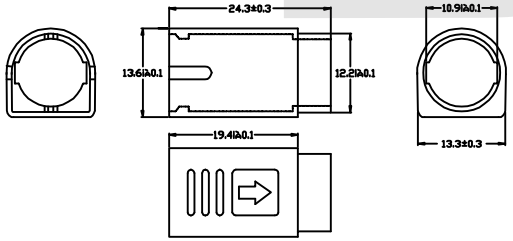

大胶壳

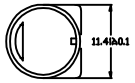

小胶壳

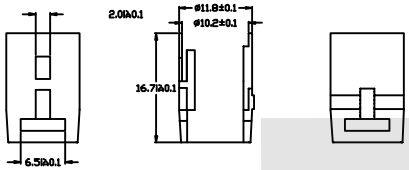

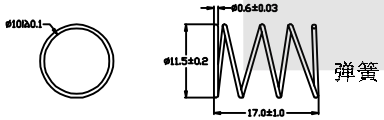

弹簧

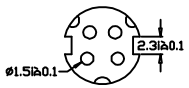

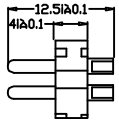

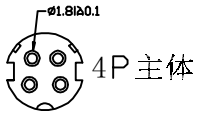

4P主体

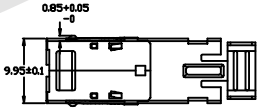

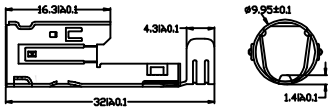

前壳

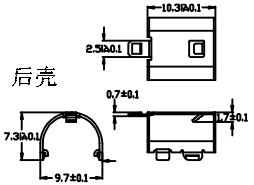

后壳

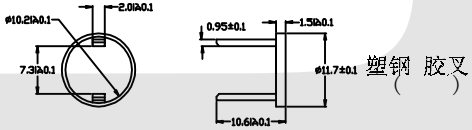

塑钢 胶叉
( )

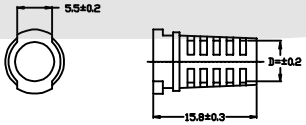

网尾

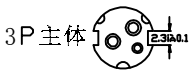

3P主体

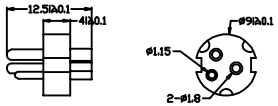

KLS1-289-3P-5.0

- OD Size
  - 1.D=4.0
  - 2.D=4.5
  - 3.D=5.0
  - 4.D=5.5
  - 5.D=6.0
  - 6.D=6.5
- Pin Number

KLS ELECTRONIC co.,LTD.

TOLERANCE
.xxx ±
.xx ±0.20
.x ±0.30
x ±
ANGLE ±1°

TITLE: MINI DIN3P八件式

KLS1-289-3P-5.0 | DRAWING NO.:

SHEET:	SCALE:	UNIT:	SIZE:	REV
1 / 1	1 : 1	mm	A4	A

APPD.	CHECK	DRAWN

Banana Plug Connectors*Banana Jacks Series

ITEM NO./PICTURE	SIZE	ORDER INFORMATION
KLS1-BAP-001 (4mm Banana plug) 	**φ4x48(L)mm**	KLS's Part No. / Description KLS1-BAP-001-N-B: 4MM Banana Plug / Nickel-plated / Black color KLS1-BAP-001-G-B: 4MM Banana Plug / Gold-plated / Black color KLS1-BAP-001-N-R: 4MM Banana Plug / Nickel-plated / Red color KLS1-BAP-001-G-R: 4MM Banana Plug / Gold-plated / Red color **Remark: Optional gold-plated nickel And Color Optional (Green,Blue,Yellow Color)**
KLS1-BAP-002 (4mm Banana plug) 	**φ4x46(L)mm**	KLS's Part No. / Description KLS1-BAP-002-N-B: 4MM Banana Plug / Nickel-plated / Black color KLS1-BAP-002-G-B: 4MM Banana Plug / Gold-plated / Black color KLS1-BAP-002-N-R: 4MM Banana Plug / Nickel-plated / Red color KLS1-BAP-002-G-R: 4MM Banana Plug / Gold-plated / Red color **Remark: Optional gold-plated nickel And Color Optional (Green,Blue,Yellow Color)**
KLS1-BAP-003 (4mm Banana plug) 	**φ4x42(L)mm**	KLS's Part No. / Description KLS1-BAP-003-N-B: 4MM Banana Plug / Nickel-plated / Black color KLS1-BAP-003-G-B: 4MM Banana Plug / Gold-plated / Black color KLS1-BAP-003-N-R: 4MM Banana Plug / Nickel-plated / Red color KLS1-BAP-003-G-R: 4MM Banana Plug / Gold-plated / Red color **Remark: Optional gold-plated nickel And Color Optional (Green,Blue,Yellow Color)**
KLS1-BAP-004 (4mm Banana plug) 	**φ4x33(L)mm**	KLS's Part No. / Description KLS1-BAP-004-N-B: Banana Plug / Nickel-plated / Black color KLS1-BAP-004-G-B: Banana Plug / Gold-plated / Black color KLS1-BAP-004-N-R: Banana Plug / Nickel-plated / Red color KLS1-BAP-004-G-R: Banana Plug / Gold-plated / Red color **Remark: Optional gold-plated nickel And Color Optional (Green,Blue,Yellow Color)**
KLS1-BAP-005 (4mm Banana plug) 	/	KLS's Part No. / Description KLS1-BAP-005-N-B: 4MM Banana Plug / Nickel-plated / Black color KLS1-BAP-005-G-B: 4MM Banana Plug / Gold-plated / Black color KLS1-BAP-005-N-R: 4MM Banana Plug / Nickel-plated / Red color KLS1-BAP-005-G-R: 4MM Banana Plug / Gold-plated / Red color **Remark: Optional gold-plated nickel And Color Optional (Green,Blue,Yellow Color)**
KLS1-BAP-006 (4mm Banana plug) 	/	KLS's Part No. / Description KLS1-BAP-006-N-B: 4MM Banana Plug / Nickel-plated / Black color KLS1-BAP-006-G-B: 4MM Banana Plug / Gold-plated / Black color KLS1-BAP-006-N-R: 4MM Banana Plug / Nickel-plated / Red color KLS1-BAP-006-G-R: 4MM Banana Plug / Gold-plated / Red color **Remark: Optional gold-plated nickel And Color Optional (Green,Blue,Yellow Color)**

Banana Plug Connectors*Banana Jacks Series

KLS1-BAP-007 (Y Banana plug)



/

KLS's Part No.	Description
KLS1-BAP-007-N-B	Y Type Banana Plug / Nickel-plated / Black color
KLS1-BAP-007-G-B	Y Type Banana Plug / Gold-plated / Black color
KLS1-BAP-007-N-R	Y Type Banana Plug / Nickel-plated / Red color
KLS1-BAP-007-G-R	Y Type Banana Plug / Gold-plated / Red color

Remark: Optional gold-plated nickel And Color Optional (Green,Blue,Yellow Color)

KLS1-BAP-008 (2mm Banana plug)



/

KLS's Part No.	Description
KLS1-BAP-008-N-B	2MM Banana Plug / Nickel-plated / Black color
KLS1-BAP-008-G-B	2MM Banana Plug / Gold-plated / Black color
KLS1-BAP-008-N-R	2MM Banana Plug / Nickel-plated / Red color
KLS1-BAP-008-G-R	2MM Banana Plug / Gold-plated / Red color

Remark: Optional gold-plated nickel And Color Optional (Green,Blue,Yellow Color)

KLS1-BAP-009 (2mm Banana plug)



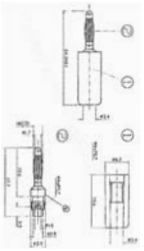

KLS's Part No.	Description
KLS1-BAP-009-N-B	2MM Banana Plug / Nickel-plated / Black color
KLS1-BAP-009-G-B	2MM Banana Plug / Gold-plated / Black color
KLS1-BAP-009-N-R	2MM Banana Plug / Nickel-plated / Red color
KLS1-BAP-009-G-R	2MM Banana Plug / Gold-plated / Red color

Remark: Optional gold-plated nickel And Color Optional (Green,Blue,Yellow Color)

KLS1-BAP-010 (4mm Banana plug)



φ4x42(L)mm

KLS's Part No.	Description
KLS1-BAP-010-N-B	4MM Banana Plug / Nickel-plated / Black color
KLS1-BAP-010-G-B	4MM Banana Plug / Gold-plated / Black color
KLS1-BAP-010-N-R	4MM Banana Plug / Nickel-plated / Red color
KLS1-BAP-010-G-R	4MM Banana Plug / Gold-plated / Red color

Remark: Optional gold-plated nickel And Color Optional (Green,Blue,Yellow Color)

KLS1-BAP-011 (4mm Banana plug)



47(L) x 14(W) x 8.5(D) mm

KLS's Part No.	Description
KLS1-BAP-011-N-B	4MM Banana Plug / Nickel-plated / Black color
KLS1-BAP-011-G-B	4MM Banana Plug / Gold-plated / Black color
KLS1-BAP-011-N-R	4MM Banana Plug / Nickel-plated / Red color
KLS1-BAP-011-G-R	4MM Banana Plug / Gold-plated / Red color

Remark: Optional gold-plated nickel And Color Optional (Green,Blue,Yellow Color)

KLS1-BAP-012 (4mm Banana plug)



φ4x53(L)mm

KLS's Part No.	Description
KLS1-BAP-012-N-B	4MM Banana Plug / Nickel-plated / Black color
KLS1-BAP-012-G-B	4MM Banana Plug / Gold-plated / Black color
KLS1-BAP-012-N-R	4MM Banana Plug / Nickel-plated / Red color
KLS1-BAP-012-G-R	4MM Banana Plug / Gold-plated / Red color

Remark: Optional gold-plated nickel And Color Optional (Green,Blue,Yellow Color)

Banana Plug Connectors*Banana Jacks Series

ITEM NO./PICTURE	SIZE	ORDER INFORMATION
KLS1-BAP-013 (4mm Banana plug) 	/	KLS's Part No. / Description KLS1-BAP-013-N-B — 4MM Banana Plug / Nickel-plated / Black color KLS1-BAP-013-G-B — 4MM Banana Plug / Gold-plated / Black color KLS1-BAP-013-N-R — 4MM Banana Plug / Nickel-plated / Red color KLS1-BAP-013-G-R — 4MM Banana Plug / Gold-plated / Red color **Remark: Optional gold-plated nickel And Color Optional (Green,Blue,Yellow Color)**
KLS1-BAP-014 (4mm Banana plug) 	/	KLS's Part No. / Description KLS1-BAP-014-N-B — 4MM Banana Plug / Nickel-plated / Black color KLS1-BAP-014-G-B — 4MM Banana Plug / Gold-plated / Black color KLS1-BAP-014-N-R — 4MM Banana Plug / Nickel-plated / Red color KLS1-BAP-014-G-R — 4MM Banana Plug / Gold-plated / Red color **Remark: Optional gold-plated nickel And Color Optional (Green,Blue,Yellow Color)**
KLS1-BAP-015 (4mm Banana plug) 	/	KLS's Part No. / Description KLS1-BAP-015-N-B — 4MM Banana Plug / Nickel-plated / Black color KLS1-BAP-015-G-B — 4MM Banana Plug / Gold-plated / Black color KLS1-BAP-015-N-R — 4MM Banana Plug / Nickel-plated / Red color KLS1-BAP-015-G-R — 4MM Banana Plug / Gold-plated / Red color **Remark: Optional gold-plated nickel And Color Optional (Green,Blue,Yellow Color)**
KLS1-BAP-016 (4mm Banana plug) 	/	KLS's Part No. / Description KLS1-BAP-016-N-B — 4MM Banana Plug / Nickel-plated / Black color KLS1-BAP-016-G-B — 4MM Banana Plug / Gold-plated / Black color KLS1-BAP-016-N-R — 4MM Banana Plug / Nickel-plated / Red color KLS1-BAP-016-G-R — 4MM Banana Plug / Gold-plated / Red color **Remark: Optional gold-plated nickel And Color Optional (Green,Blue,Yellow Color)**
KLS1-BAP-017 (4mm Banana plug) 	/	KLS's Part No. / Description KLS1-BAP-017-N-B — 4MM Banana Plug / Nickel-plated / Black color KLS1-BAP-017-G-B — 4MM Banana Plug / Gold-plated / Black color KLS1-BAP-017-N-R — 4MM Banana Plug / Nickel-plated / Red color KLS1-BAP-017-G-R — 4MM Banana Plug / Gold-plated / Red color **Remark: Optional gold-plated nickel And Color Optional (Green,Blue,Yellow Color)**
KLS1-BAP-018 (Banana plug) 	/	KLS's Part No. / Description KLS1-BAP-018-N-B — Banana Plug / Nickel-plated / Black color KLS1-BAP-018-G-B — Banana Plug / Gold-plated / Black color KLS1-BAP-018-N-R — Banana Plug / Nickel-plated / Red color KLS1-BAP-018-G-R — Banana Plug / Gold-plated / Red color **Remark: Optional gold-plated nickel And Color Optional (Green,Blue,Yellow Color)**

Banana Plug Connectors*Banana Jacks Series

ITEM NO./PICTURE	SIZE	ORDER INFORMATION
KLS1-BAP-019 (Banana plug) 	/	KLS's Part No. / Description KLS1-BAP-019-N-B — Banana Plug / Nickel-plated / Black color KLS1-BAP-019-G-B — Banana Plug / Gold-plated / Black color KLS1-BAP-019-N-R — Banana Plug / Nickel-plated / Red color KLS1-BAP-019-G-R — Banana Plug / Gold-plated / Red color **Remark: Optional gold-plated nickel And Color Optional (Green,Blue,Yellow Color)**
KLS1-BAP-020 (Banana plug) 	/	KLS's Part No. / Description KLS1-BAP-020-N-B — Banana Plug / Nickel-plated / Black color KLS1-BAP-020-G-B — Banana Plug / Gold-plated / Black color KLS1-BAP-020-N-R — Banana Plug / Nickel-plated / Red color KLS1-BAP-020-G-R — Banana Plug / Gold-plated / Red color **Remark: Optional gold-plated nickel And Color Optional (Green,Blue,Yellow Color)**
KLS1-BAP-021 (Banana plug) 	/	KLS's Part No. / Description KLS1-BAP-021-N-B — Banana Plug / Nickel-plated / Black color KLS1-BAP-021-G-B — Banana Plug / Gold-plated / Black color KLS1-BAP-021-N-R — Banana Plug / Nickel-plated / Red color KLS1-BAP-021-G-R — Banana Plug / Gold-plated / Red color **Remark: Optional gold-plated nickel And Color Optional (Green,Blue,Yellow Color)**
KLS1-BAP-022 (Banana plug) 	/	KLS's Part No. / Description KLS1-BAP-022-N-B — Banana Plug / Nickel-plated / Black color KLS1-BAP-022-G-B — Banana Plug / Gold-plated / Black color KLS1-BAP-022-N-R — Banana Plug / Nickel-plated / Red color KLS1-BAP-022-G-R — Banana Plug / Gold-plated / Red color **Remark: Optional gold-plated nickel And Color Optional (Green,Blue,Yellow Color)**
KLS1-BAP-023 (Banana plug) 	/	KLS's Part No. / Description KLS1-BAP-023-N-B — Banana Plug / Nickel-plated / Black color KLS1-BAP-023-G-B — Banana Plug / Gold-plated / Black color KLS1-BAP-023-N-R — Banana Plug / Nickel-plated / Red color KLS1-BAP-023-G-R — Banana Plug / Gold-plated / Red color **Remark: Optional gold-plated nickel And Color Optional (Green,Blue,Yellow Color)**
KLS1-BAP-024 (Y Banana plug) 	/	KLS's Part No. / Description KLS1-BAP-024-N-B — Banana Plug / Nickel-plated / Black color KLS1-BAP-024-G-B — Banana Plug / Gold-plated / Black color KLS1-BAP-024-N-R — Banana Plug / Nickel-plated / Red color KLS1-BAP-024-G-R — Banana Plug / Gold-plated / Red color **Remark: Optional gold-plated nickel And Color Optional (Green,Blue,Yellow Color)**

Banana Plug Connectors*Banana Jacks Series

ITEM NO./PICTURE	SIZE	ORDER INFORMATION
KLS1-BAJ-001 (2mm Banana Jack) 	**10A 24(L)mm**	KLS's Part No. / Description KLS1-BAJ-001-N-B: 2MM Banana Jack / Nickel-plated / Black color KLS1-BAJ-001-G-B: 2MM Banana Jack / Gold-plated / Black color KLS1-BAJ-001-N-R: 2MM Banana Jack / Nickel-plated / Red color KLS1-BAJ-001-G-R: 2MM Banana Jack / Gold-plated / Red color **Remark: Optional gold-plated nickel And Color Optional (Green,Blue,Yellow Color)**
KLS1-BAJ-002 (4mm Banana Jack) 	**6A 23(L)mm**	KLS's Part No. / Description KLS1-BAJ-002-N-B: 4MM Banana Jack / Nickel-plated / Black color KLS1-BAJ-002-G-B: 4MM Banana Jack / Gold-plated / Black color KLS1-BAJ-002-N-R: 4MM Banana Jack / Nickel-plated / Red color KLS1-BAJ-002-G-R: 4MM Banana Jack / Gold-plated / Red color **Remark: Optional gold-plated nickel And Color Optional (Green,Blue,Yellow Color)**
KLS1-BAJ-003 (4mm Banana Jack) 	**6A**	KLS's Part No. / Description KLS1-BAJ-003-N-B: 4MM Banana Jack / Nickel-plated / Black color KLS1-BAJ-003-G-B: 4MM Banana Jack / Gold-plated / Black color KLS1-BAJ-003-N-R: 4MM Banana Jack / Nickel-plated / Red color KLS1-BAJ-003-G-R: 4MM Banana Jack / Gold-plated / Red color **Remark: Optional gold-plated nickel And Color Optional (Green,Blue,Yellow Color)**

Binding Post Series

KLS1-BIP-001 (Binding Post)



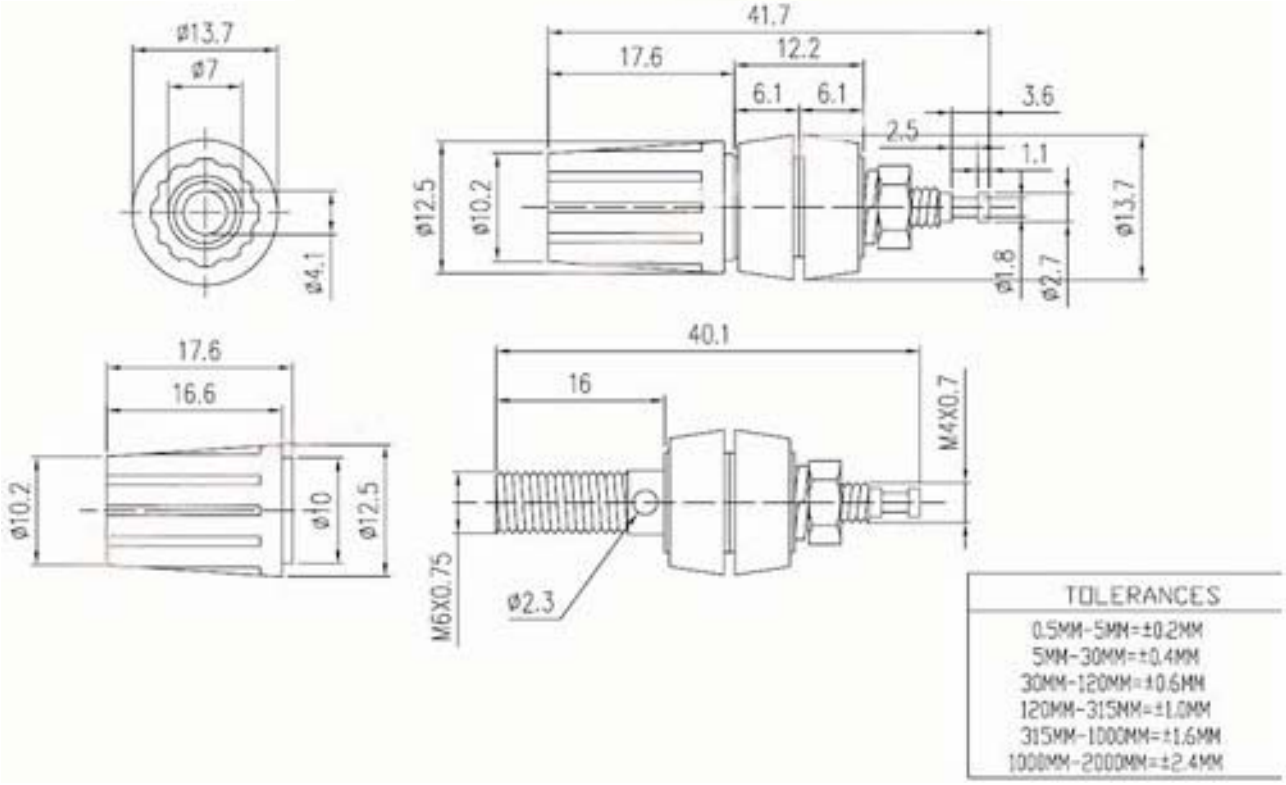

ORDER INFORMATION

KLS's Part No.	Description
KLS1-BIP-001-N-B	Binding Post / Nickel-plated / Black color
KLS1-BIP-001-G-B	Binding Post / Gold-plated / Black color
KLS1-BIP-001-N-R	Binding Post / Nickel-plated / Red color
KLS1-BIP-001-G-R	Binding Post / Gold-plated / Red color

Remark: Optional gold-plated nickel And Color
Optional (Green,Blue,Yellow Color)

Binding Post Series

KLS1-BIP-002 (Binding Post)



15A

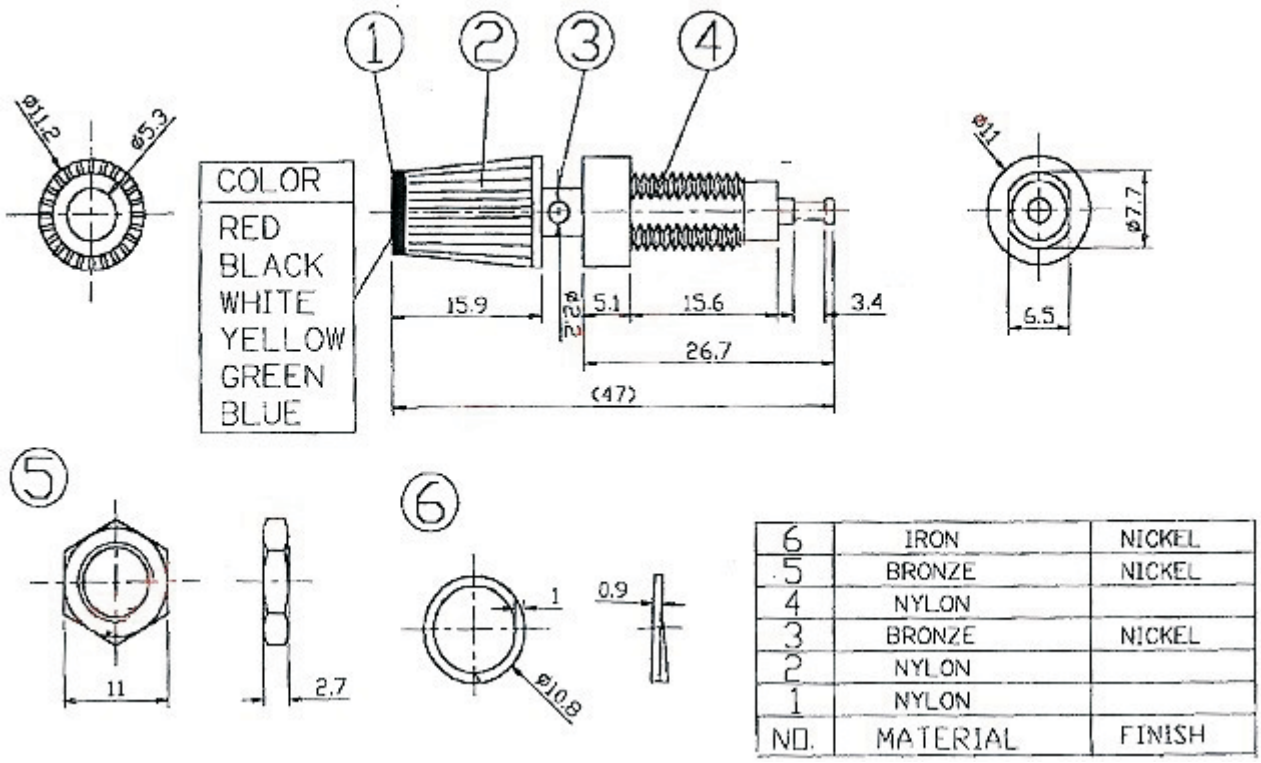

NO.	MATERIAL	FINISH
6	IRON	NICKEL
5	BRONZE	NICKEL
4	NYLON	
3	BRONZE	NICKEL
2	NYLON	
1	NYLON	

ORDER INFORMATION

KLS's Part No.	Description
KLS1-BIP-002-N-B	Binding Post / Nickel-plated / Black color
KLS1-BIP-002-G-B	Binding Post / Gold-plated / Black color
KLS1-BIP-002-N-R	Binding Post / Nickel-plated / Red color
KLS1-BIP-002-G-R	Binding Post / Gold-plated / Red color

Remark: Optional gold-plated nickel And Color
Optional (Green,Blue,Yellow Color)

Binding Post Series

KLS1-BIP-015 (Binding Post)



KLS1-BIP-015-G:



15A

ORDER INFORMATION

KLS's Part No.	Description
KLS1-BIP-015-N-B	Binding Post / Nickel-plated / Black color
KLS1-BIP-015-G-B	Binding Post / Gold-plated / Black color
KLS1-BIP-015-N-R	Binding Post / Nickel-plated / Red color
KLS1-BIP-015-G-R	Binding Post / Gold-plated / Red color

Remark: Optional gold-plated nickel And Color
Optional (Green,Blue,Yellow Color)

Binding Post Series

KLS1-BIP-013 (Binding Post)



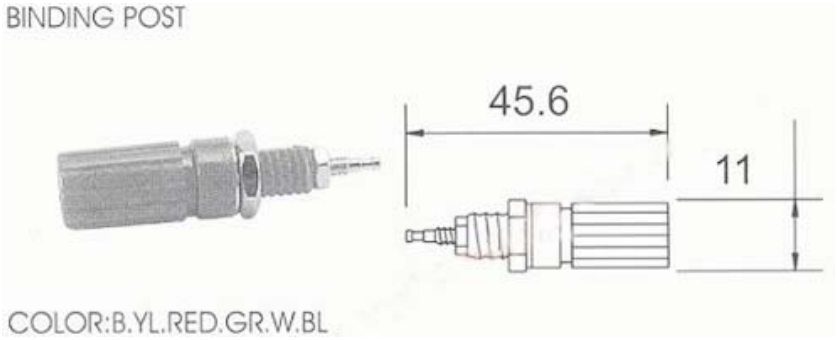





15A

ORDER INFORMATION

KLS's Part No.	Description
KLS1-BIP-013-N-B	Binding Post / Nickel-plated / Black color
KLS1-BIP-013-G-B	Binding Post / Gold-plated / Black color
KLS1-BIP-013-N-R	Binding Post / Nickel-plated / Red color
KLS1-BIP-013-G-R	Binding Post / Gold-plated / Red color

Remark: Optional gold-plated nickel And Color
Optional (Green,Blue,Yellow Color)

Binding Post Series

KLS1-BIP-014 (Binding Post)







15A

ORDER INFORMATION

KLS's Part No.	Description
KLS1-BIP-014-N-B	Binding Post / Nickel-plated / Black color
KLS1-BIP-014-G-B	Binding Post / Gold-plated / Black color
KLS1-BIP-014-N-R	Binding Post / Nickel-plated / Red color
KLS1-BIP-014-G-R	Binding Post / Gold-plated / Red color

Remark: Optional gold-plated nickel And Color
Optional (Green,Blue,Yellow Color)

Binding Post Series

KLS1-BIP-011 (Binding Post)



15A

ORDER INFORMATION

KLS's Part No.	Description
KLS1-BIP-011-N-B	Binding Post / Nickel-plated / Black color
KLS1-BIP-011-G-B	Binding Post / Gold-plated / Black color
KLS1-BIP-011-N-R	Binding Post / Nickel-plated / Red color
KLS1-BIP-011-G-R	Binding Post / Gold-plated / Red color

Remark: Optional gold-plated nickel And Color
Optional (Green,Blue,Yellow Color)

All specification & dimensions are subject to change, Please call your nearest KLS sales representative for update information

Binding Post Series

KLS1-BIP-012 (Binding Post)



15A

ORDER INFORMATION

KLS's Part No.	Description
KLS1-BIP-012-N-B	Binding Post / Nickel-plated / Black color
KLS1-BIP-012-G-B	Binding Post / Gold-plated / Black color
KLS1-BIP-012-N-R	Binding Post / Nickel-plated / Red color
KLS1-BIP-012-G-R	Binding Post / Gold-plated / Red color

Remark: Optional gold-plated nickel And Color
Optional (Green,Blue,Yellow Color)

Binding Post Series

KLS1-BIP-009 (Binding Post)



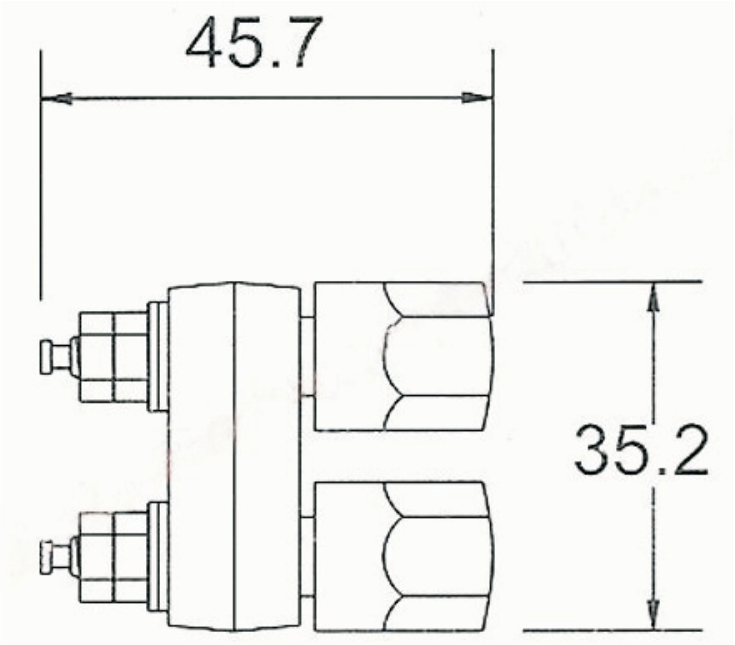

30A

KLS1-BIP-009-G: Gold-plated





ORDER INFORMATION

KLS's Part No.	Description
KLS1-BIP-009-N-B/R	Binding Post / Nickel-plated / Black/Red color
KLS1-BIP-009-G-B/R	Binding Post / Gold-plated / Black/Red color

Remark: Optional gold-plated nickel

Binding Post Series

KLS1-BIP-010 (Binding Post)



15A

ORDER INFORMATION

KLS's Part No.	Description
KLS1-BIP-010-N-B	Binding Post / Nickel-plated / Black color
KLS1-BIP-010-G-B	Binding Post / Gold-plated / Black color
KLS1-BIP-010-N-R	Binding Post / Nickel-plated / Red color
KLS1-BIP-010-G-R	Binding Post / Gold-plated / Red color

Remark: Optional gold-plated nickel And Color
Optional (Green,Blue,Yellow Color)

Binding Post Series

KLS1-BIP-008 (Binding Post)

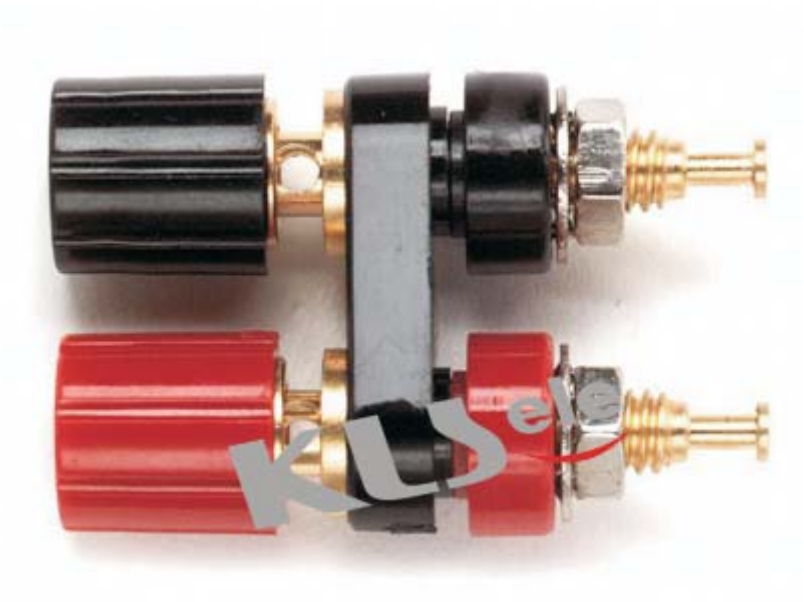

30A

ORDER INFORMATION

KLS's Part No.	Description
KLS1-BIP-008-N-B/R	Binding Post / Nickel-plated / Black/Red color
KLS1-BIP-008-G-B/R	Binding Post / Gold-plated / Black/Red color

Remark: Optional gold-plated nickel And Color
Optional (Green,Blue,Yellow Color)

Binding Post Series

KLS1-BIP-007 (Binding Post)



20A

ORDER INFORMATION

KLS's Part No.	Description
KLS1-BIP-007-N-B	Binding Post / Nickel-plated / Black color
KLS1-BIP-007-G-B	Binding Post / Gold-plated / Black color
KLS1-BIP-007-N-R	Binding Post / Nickel-plated / Red color
KLS1-BIP-007-G-R	Binding Post / Gold-plated / Red color

Remark: Optional gold-plated nickel And Color
Optional (Green,Blue,Yellow Color)

Binding Post Series

KLS1-BIP-006 (Binding Post)



15A

ORDER INFORMATION

KLS's Part No.	Description
KLS1-BIP-006-N-B	Binding Post / Nickel-plated / Black color
KLS1-BIP-006-G-B	Binding Post / Gold-plated / Black color
KLS1-BIP-006-N-R	Binding Post / Nickel-plated / Red color
KLS1-BIP-006-G-R	Binding Post / Gold-plated / Red color

Remark: Optional gold-plated nickel And Color
Optional (Green,Blue,Yellow Color)

Binding Post Series

KLS1-BIP-005 (Binding Post)



15A

Size: φ4x30.5(L)mm

ORDER INFORMATION

KLS's Part No.	Description
KLS1-BIP-005-N-B	Binding Post / Nickel-plated / Black color
KLS1-BIP-005-G-B	Binding Post / Gold-plated / Black color
KLS1-BIP-005-N-R	Binding Post / Nickel-plated / Red color
KLS1-BIP-004-G-R	Binding Post / Gold-plated / Red color

Remark: Optional gold-plated nickel And Color
Optional (Green,Blue,Yellow Color)

Binding Post Series

KLS1-BIP-004 (Binding Post)



15A

ORDER INFORMATION

KLS's Part No.	Description
KLS1-BIP-004-N-B	Binding Post / Nickel-plated / Black color
KLS1-BIP-004-G-B	Binding Post / Gold-plated / Black color
KLS1-BIP-004-N-R	Binding Post / Nickel-plated / Red color
KLS1-BIP-004-G-R	Binding Post / Gold-plated / Red color

Remark: Optional gold-plated nickel And Color
Optional (Green,Blue,Yellow Color)

Binding Post Series

KLS1-BIP-003 (Binding Post)



20A
Size: φ24x61(L)mm

ORDER INFORMATION

KLS's Part No.	Description
KLS1-BIP-003-N-B	Binding Post / Nickel-plated / Black color
KLS1-BIP-003-G-B	Binding Post / Gold-plated / Black color
KLS1-BIP-003-N-R	Binding Post / Nickel-plated / Red color
KLS1-BIP-003-G-R	Binding Post / Gold-plated / Red color

Remark: Optional gold-plated nickel And Color
Optional (Green,Blue,Yellow Color)

Loudspeaker Terminals Series

ITEM	DISCRIPTION
KLS1-WP-2P-01B (Push Terminal) 	Withstand Voltage: 500 V Insulation Resistance: 50 Megohms Contact Resistance: less than 30 Milliohms Application: Audio system 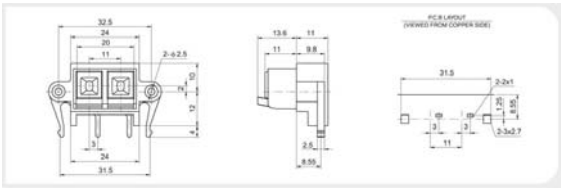
KLS1-WP-2P-02B (Push Terminal) 	Withstand Voltage: 500 V Insulation Resistance: 50 Megohms Contact Resistance: less than 30 Milliohms Application: Audio system 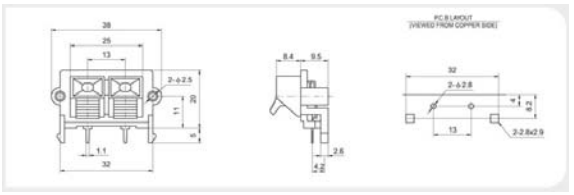
KLS1-WP-2P-03A (Push Terminal) 	Withstand Voltage: 500 V Insulation Resistance: 50 Megohms Contact Resistance: less than 30 Milliohms Application: Audio system 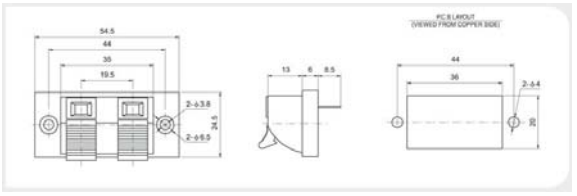
KLS1-WP-2P-04A (Push Terminal) 	Withstand Voltage: 500 V Insulation Resistance: 50 Megohms Contact Resistance: less than 30 Milliohms Application: Audio system

Loudspeaker Connectors Series

ITEM	ITEM
KLS1-WP-2P-05A (Push Terminal) 	**KLS1-WP-2P-06A** 
KLS1-WP-2P-07A 	**KLS1-WP-2P-08A** 
KLS1-WP-2P-09A 	**KLS1-WP-2P-10A** 
KLS1-WP-2P-11A 	**KLS1-WP-2P-12A** 

Loudspeaker Connectors Series

I

KLS1-WP-3P-01A (Push Terminal)

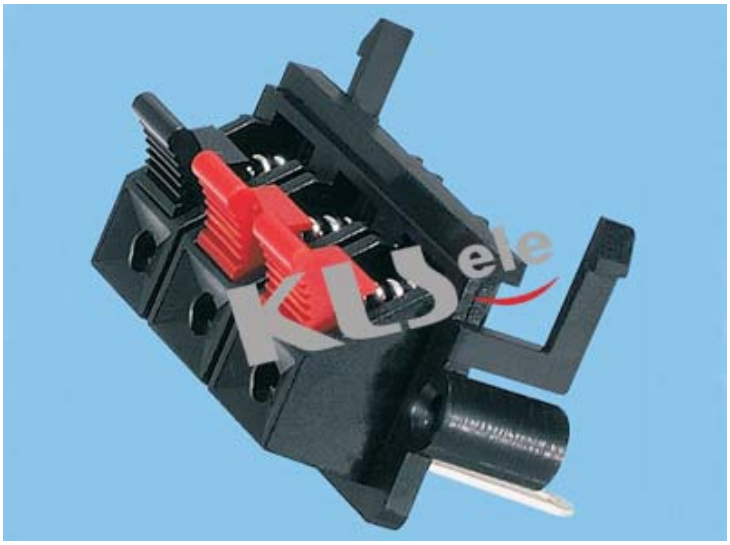

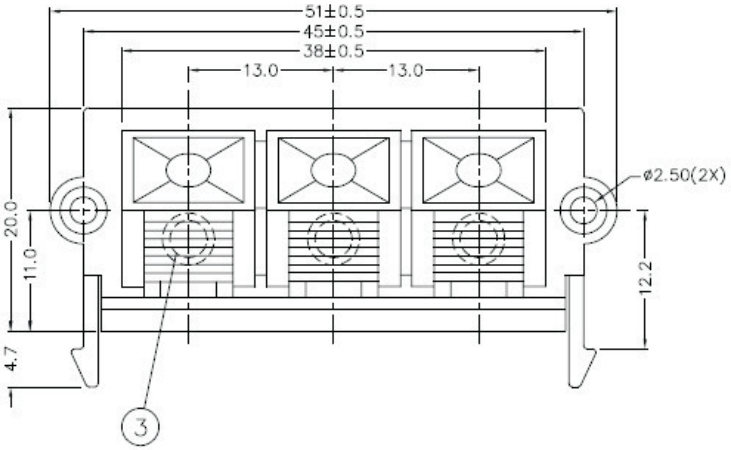

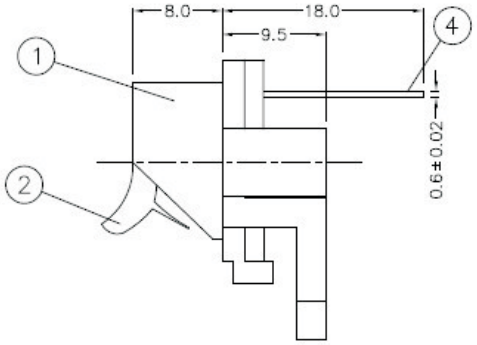

ITEM	PART NAME	MATERIAL	QTY.	REMARK
1	BODY	PBT	1	
2	PUSH PLATE	PBT	3	
3	SPRING	STEEL	3	
4	TERMINAL	BRASS	3	

Withstand Voltage:	500 V
Insulation Resistance:	50 Megohms
Contact Resistance:	less than 30 Milliohms
Application:	Audio system

Loudspeaker Connectors Series

I

KLS1-WP-3P-01B (Push Terminal)



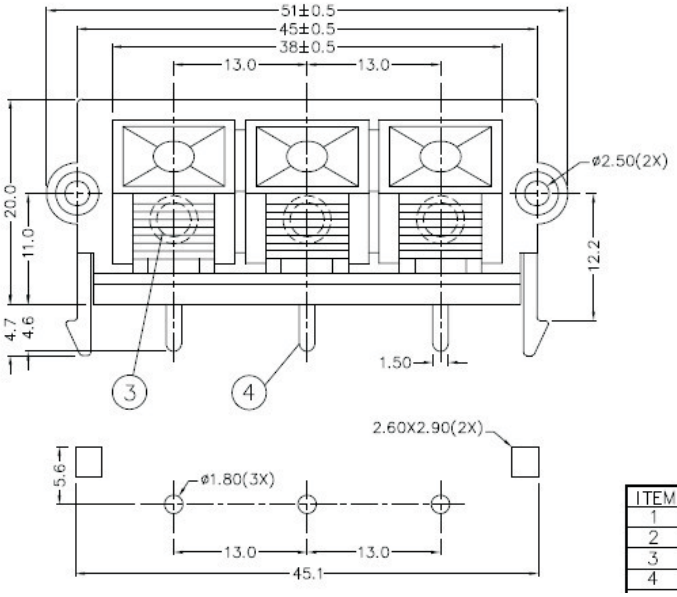

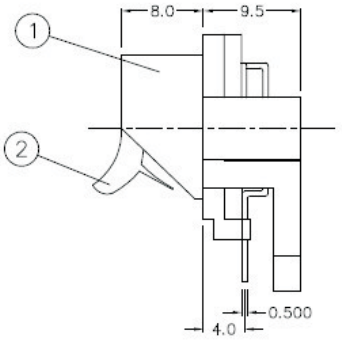

ITEM	PART NAME	MATERIAL	QTY.	REMARK
1	BODY	PBT	1	
2	PUSH PLATE	PBT	3	
3	SPRING	STEEL	3	
4	TERMINAL	BRASS	3	

Withstand Voltage:	500 V
Insulation Resistance:	50 Megohms
Contact Resistance:	less than 30 Milliohms
Application:	Audio system

Loudspeaker Connectors Series

KLS1-WP-4P-01A (Push Terminal)

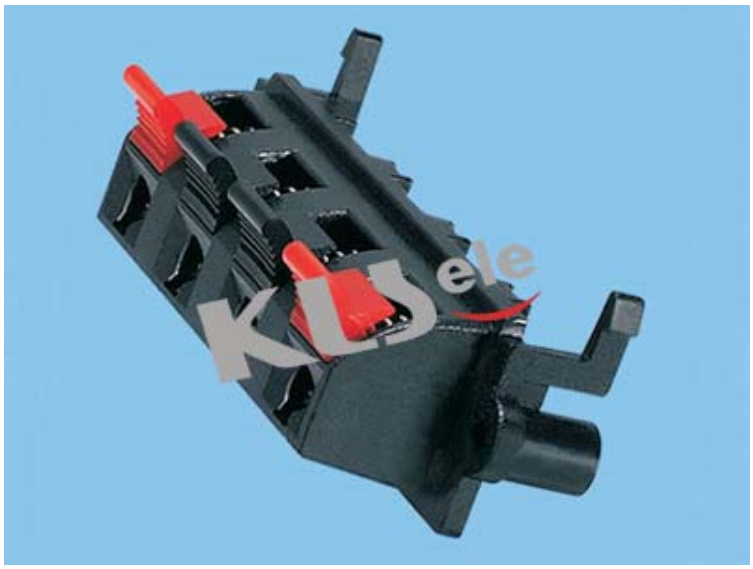

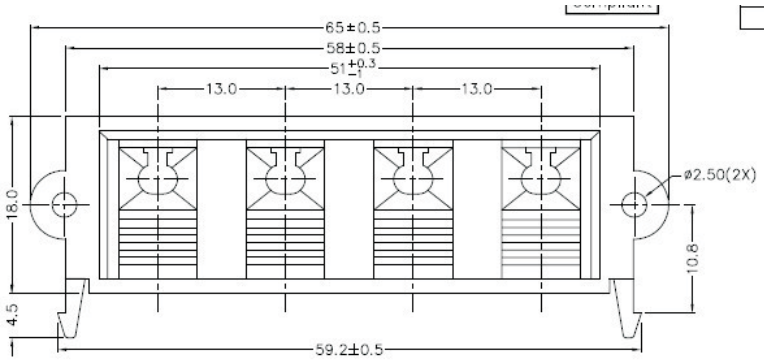

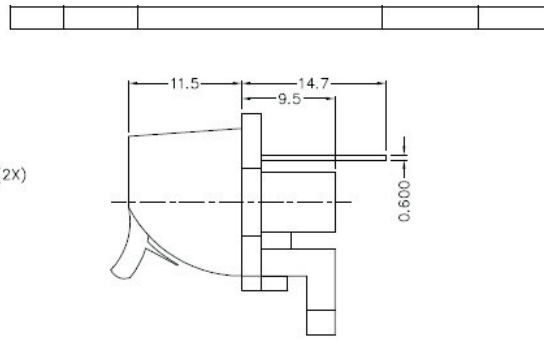

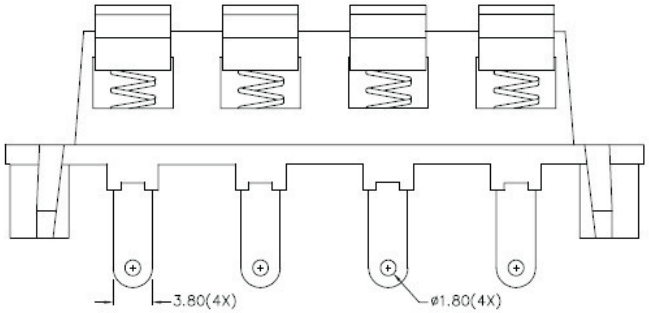

ITEM	PART NAME	MATERIAL	QTY.	REMARK
1	BODY	PBT	1	
2	PUSH PLATE	PBT	4	
3	SPRING	STEEL	4	
4	TERMINAL	BRASS	4	
MODEL		COLOR OF PUSH PLATE		
TST-204HL-01		R B B R		R=RED
				B=BLACK

Withstand Voltage:	500 V
Insulation Resistance:	50 Megohms
Contact Resistance:	less than 30 Milliohms
Application:	Audio system

Loudspeaker Connectors Series

I

KLS1-WP-4P-01B (Push Terminal)



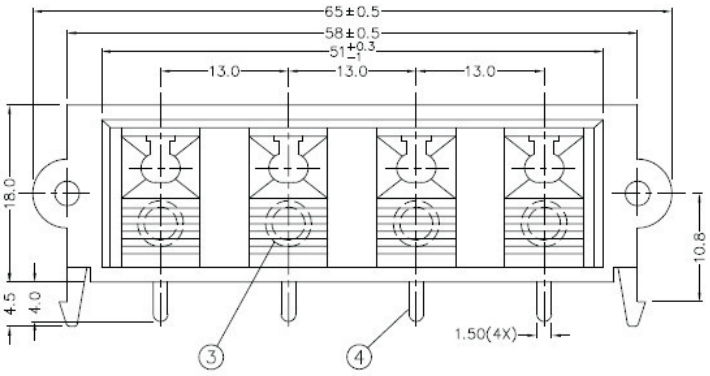

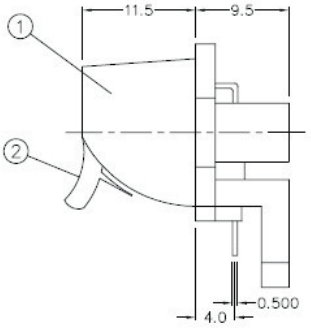

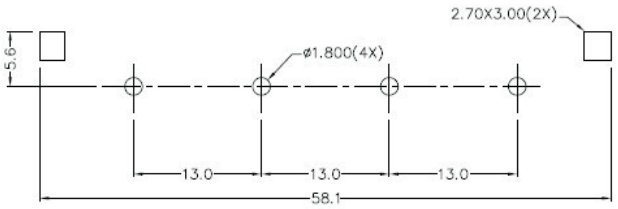

ITEM	PART NAME	MATERIAL	QTY.	REMARK
1	BODY	PBT	1	
2	PUSH PLATE	PBT	4	
3	SPRING	STEEL	4	
4	TERMINAL	BRASS	4	
MODEL		COLOR OF PUSH PLATE		
TST-204V-01		R B B R		R=RED
TST-204V-02		B B B B		B=BLACK

Withstand Voltage:	500 V
Insulation Resistance:	50 Megohms
Contact Resistance:	less than 30 Milliohms
Application:	Audio system

Loudspeaker Connectors Series

I

KLS1-WP-4P-02B (Push Terminal)



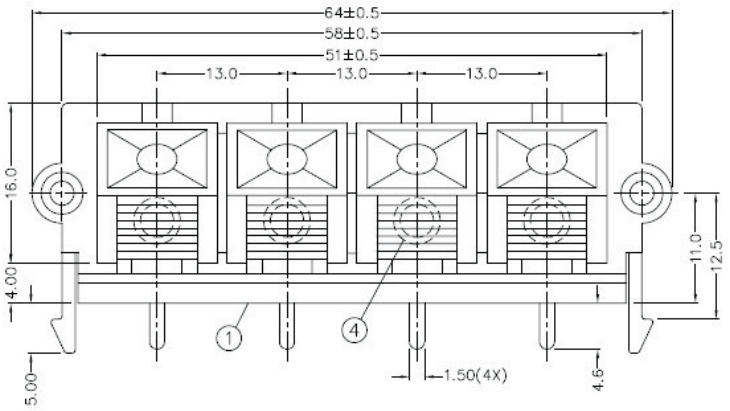

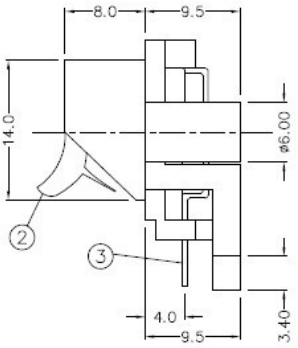

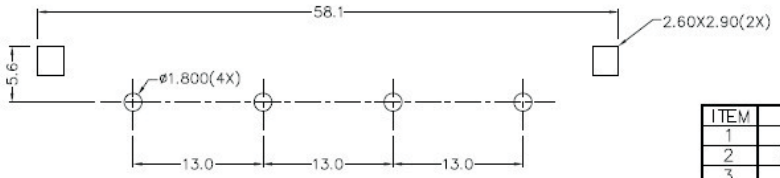

PCB LAYOUT
(BOTTOM VIEW)

ITEM	PART NAME	MATERIAL	QTY.	REMARK
1	BODY	PBT	1	
2	PUSH PLATE	PBT	4	
3	SPRING	STEEL	4	
4	TERMINAL	BRASS	4	
MODEL		COLOR OF PUSH PLATE		
TST-214V		R B B R		R=RED
				B=BLACK

Withstand Voltage:	500 V
Insulation Resistance:	50 Megohms
Contact Resistance:	less than 30 Milliohms
Application:	Audio system

KLS

1-Connectors & Connector Components-Разъемы, соединители и их узлы

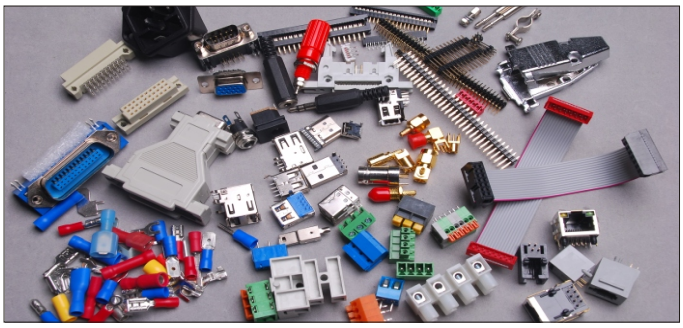

1-1 Wire to Board connectors
1-2 Board to Board connectors
1-3 Input/Output (Box to Box)
1-4 Socket & Card connectors
1-5 Power connectors
1-6 Audio & Video connectors
1-7 **RF & Coax**
1-8 Terminal Blocks & Strips
1-9 Terminals & Splices

More . . .



KLS ELECTRONIC CO; LTD. WWW.CNKLS.COM Email:sales@cnkls.com
Tel:0086 574 86824882 Fax:0086 574 86824882

TNC Connectors

KLS offers 50 and 75 ohm TNC connectors. Please visit following pages for details.



Features & Benefits:

Threaded coupling interface ensures connector will not de-couple in vibration-intensive applications
Many TNCs are recognized under the component program of Underwriter's Laboratories and have undergone stringent testing from an independent laboratory
Performance from 0 - 11 GHz operations in many applications

Applications:

Antennas	Cellular	Mil-Aero	Telecom
Base Stations	Components	Networks	Cable Assemblies
Instrumentation	Radar		

Family:

TNC Plugs | TNC Jacks | TNC Adapters

Under construction

KLS electronic
www.cnkls.com

I

Material

Body and outer contacts	Brass, nickel plated
Male contact	Brass, gold plated
Female contact	Beryllium copper or phosphor bronze, gold or silver plated
Crimp ferrule	Copper or brass, nickel plated
Other metal parts	Brass, nickel plated (except M39012 silver plated)
Insulator	PTFE, copolymer of styrene, glass TFE (hermetically sealed)
Gasket	Silicone rubber

Dimension (Unit/Inch/1 inch=25.4mm)

Note: These characteristics are typical but may not apply to all connectors.

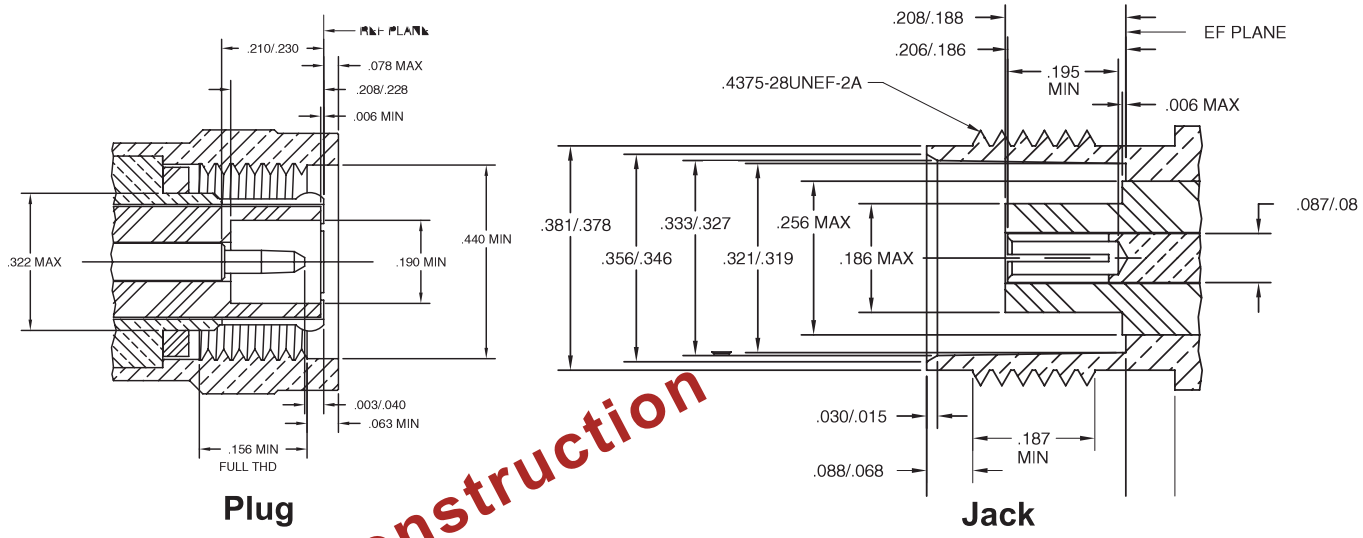

Under construction

Main characteristic

Temperature Range	-65 ~ +165 ° C (PE Cable -40 ~ +85 ° C)
Vibration	MIL-STD-202, Method 204 cond. B
Impedance	50Ω Nominal
Frequency	Up to 11GHZ
Working Voltage	500V Max.
Dielectric withstanding Voltage	1500V rms
Contact resistance between internal contact	≤ 1.5 mΩ
Contact resistance between outer conduct:	≤ 0.2 mΩ
Insulation resistance:	≥ 5000 MΩ
VSWR Straight:	≤ 1.30
VSWR curved:	≤ 1.35
The Durability:	≥ 500 times(cycles)

Meet Standard

MIL-C-39012
CECC 22120
IEC 60169-8

TNC Plugs

TNC Plugs Straight Crimp



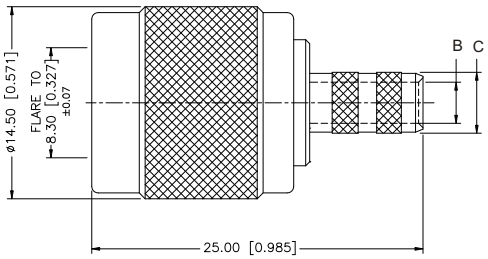

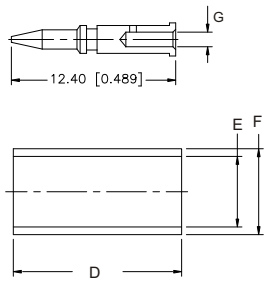

Art No.	KLS P/N	Suitable Cable	Size B	C	D	E	F
37-622-49		RG58/U					
37-622-50		RG59/U					
37-622-51		RG174/U					
		RG6U					

TNC Plugs Right Angle Crimp



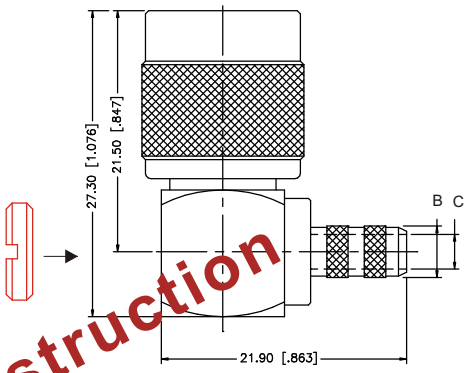

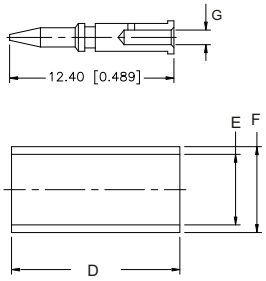

Under construction

Art No.	KLS P/N	Suitable Cable	Size B	C	D	E	F
37-622-49		RG58/U					
37-622-50		RG59/U					
37-622-51		RG174/U					
		RG6U					

BNC Plugs Right Angle Crimp



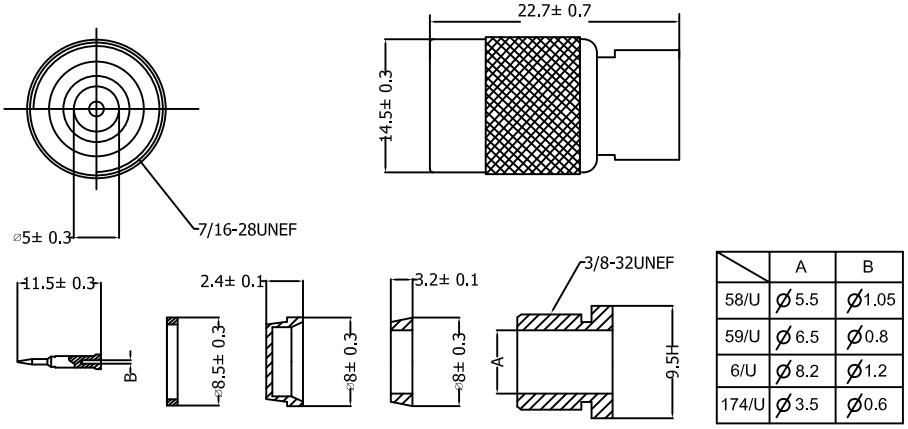

	A	B
58/U	ø5.5	ø1.05
59/U	ø6.5	ø0.8
6/U	ø8.2	ø1.2
174/U	ø3.5	ø0.6

Art No.	KLS P/N	Suitable Cable	Size B	C	D	E	F
37-622-49		RG58/U					
37-622-50		RG59/U					
37-622-51		RG174/U					
		RG6U					

TNC Plugs Straight Crimp



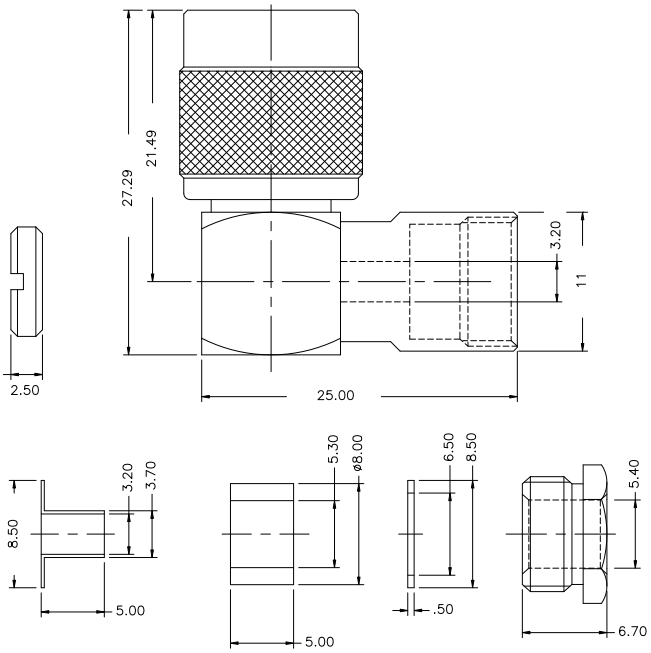

Art No.	KLS P/N	Suitable Cable	Size B	C	D	E	F
37-622-49		RG58/U					

TNC Plugs Right Angle Crimp

Under construction



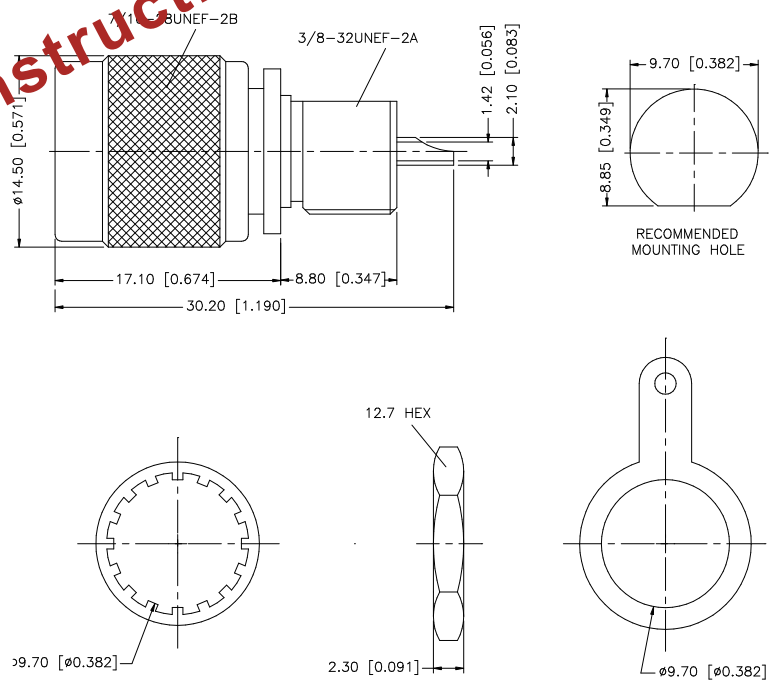

Art No.	KLS P/N	Suitable Cable	Size B	C	D	E	F
37-622-49		RG58/U					

TNC Jacks

TNC Plugs Straight Crimp



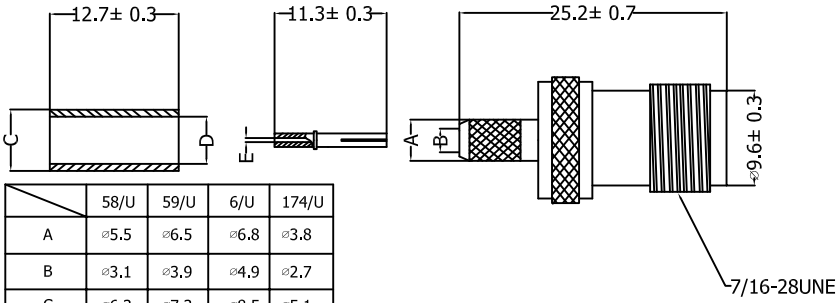

	58/U	59/U	6/U	174/U
A	ø5.5	ø6.5	ø6.8	ø3.8
B	ø3.1	ø3.9	ø4.9	ø2.7
C	ø6.3	ø7.3	ø8.5	ø5.1
D	ø5.5	ø6.5	ø7.5	ø4.4
E	ø1.05	ø1.05	ø1.2	ø0.6

Art No.	KLS P/N	Suitable Cable	Size B	C	D	E	F
37-622-49		RG58/U					
37-622-50		RG59/U					
37-622-51		RG174/U					
		RG6U					

TNC Plugs Right Angle Crimp



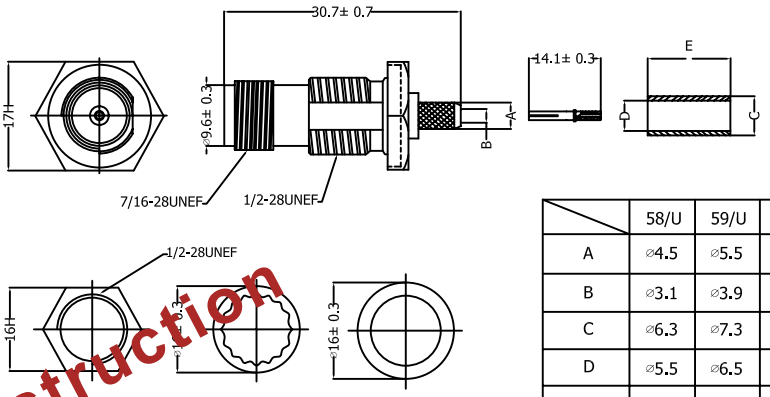

	58/U	59/U	6/U	174/U
A	ø4.5	ø5.5	ø6.8	ø3.8
B	ø3.1	ø3.9	ø4.9	ø2.8
C	ø6.3	ø7.3	ø8.5	ø5.1
D	ø5.5	ø6.5	ø7.5	ø4.5
E	12.7	12.7	12.7	10

Under construction

Art No.	KLS P/N	Suitable Cable	Size B	C	D	E	F
37-622-49		RG58/U					
37-622-50		RG59/U					
37-622-51		RG174/U					
		RG6U					

BNC Plugs Right Angle Crimp



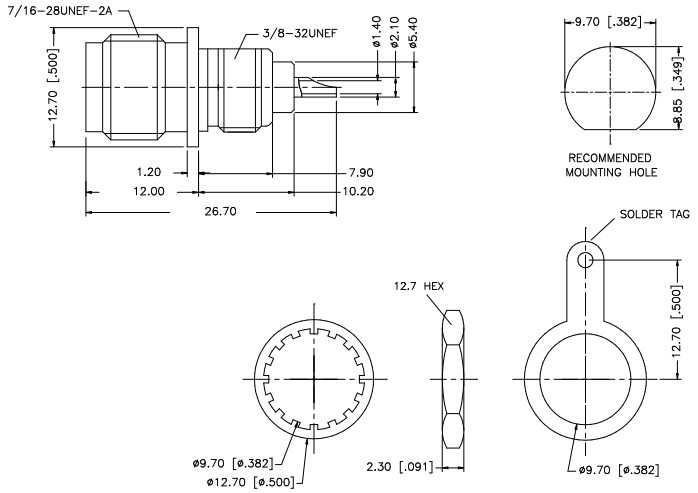

Art No.	KLS P/N	Suitable Cable	Size B	C	D	E	F
37-622-49		RG58/U					

I

TNC Plugs Straight Crimp



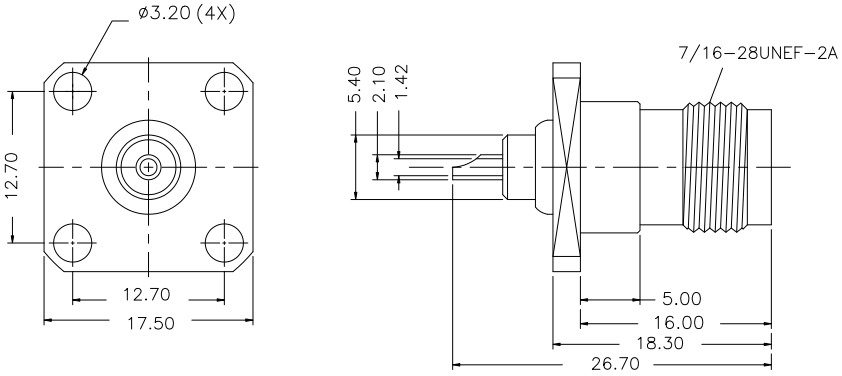

Art No.	KLS P/N	Suitable Cable	Size B	C	D	E	F
37-622-49		RG58/U					

TNC Plugs Right Angle Crimp



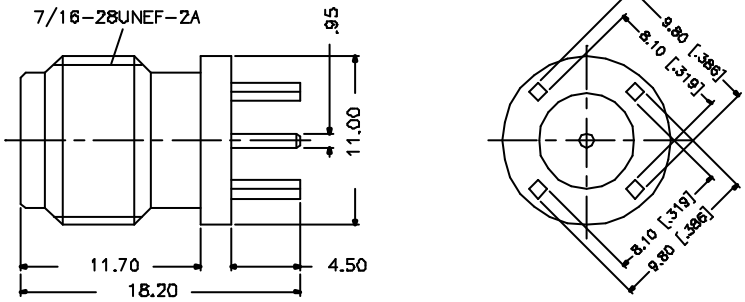

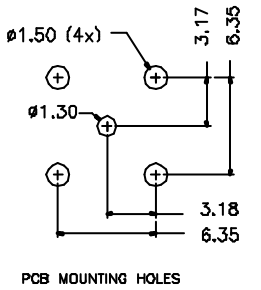

Under construction

Art No.	KLS P/N	Suitable Cable	Size B	C	D	E	F
37-622-49		RG58/U					

TNC Adapters

TNC Plugs Straight Crimp



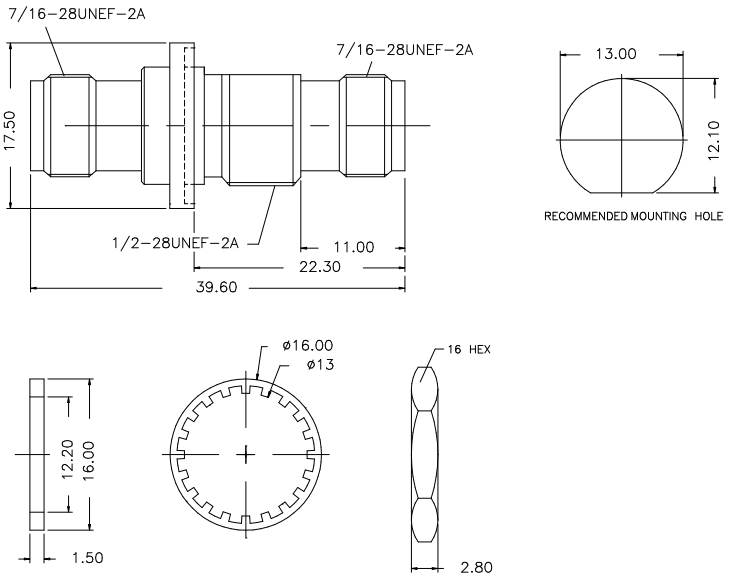

Art No.	KLS P/N	Suitable Cable	Size B	C	D	E	F
37-622-49		RG58/U					

TNC Plugs Right Angle Crimp



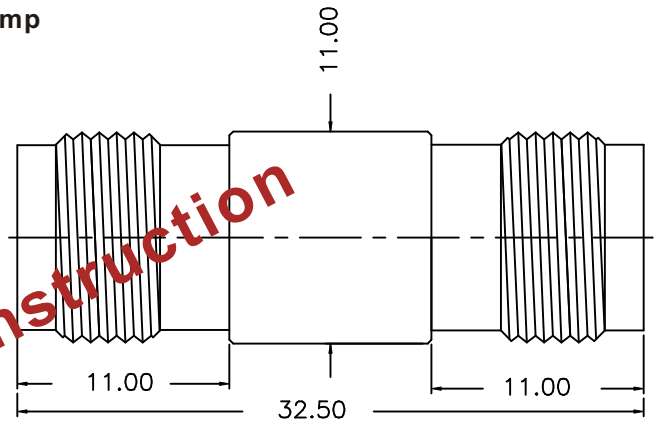

Under construction

Art No.	KLS P/N	Suitable Cable	Size B	C	D	E	F
37-622-49		RG58/U					

BNC Plugs Right Angle Crimp



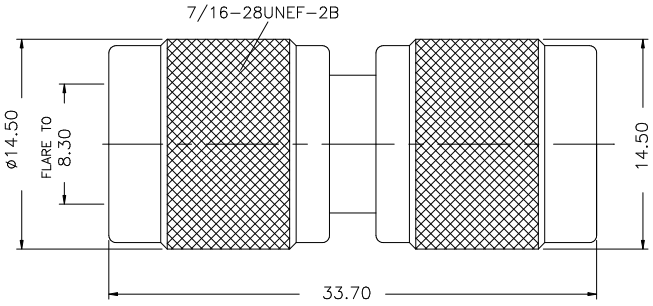

Art No.	KLS P/N	Suitable Cable	Size B	C	D	E	F
37-622-49		RG58/U					

KLS electronic
www.cnkls.com

TNC Plugs Straight Crimp



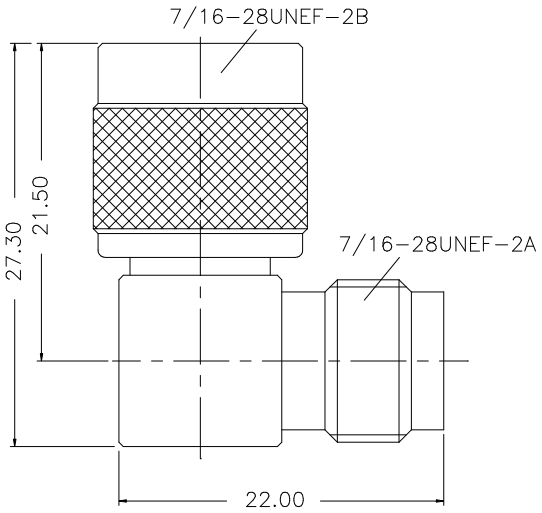

Art No.	KLS P/N	Suitable Cable	Size B	C	D	E	F
37-622-49		RG58/U					

TNC Plugs Right Angle Crimp



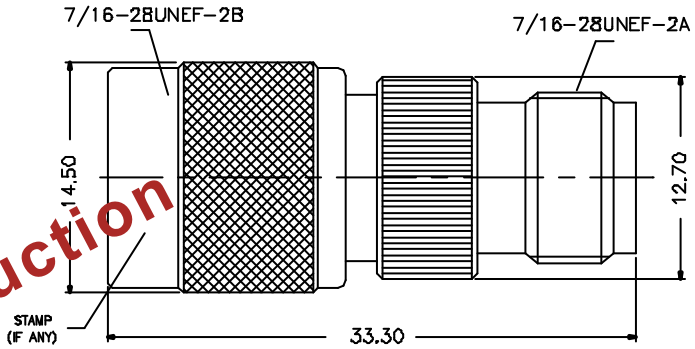

Under construction

Art No.	KLS P/N	Suitable Cable	Size B	C	D	E	F
37-622-49		RG58/U					

BNC Plugs Right Angle Crimp



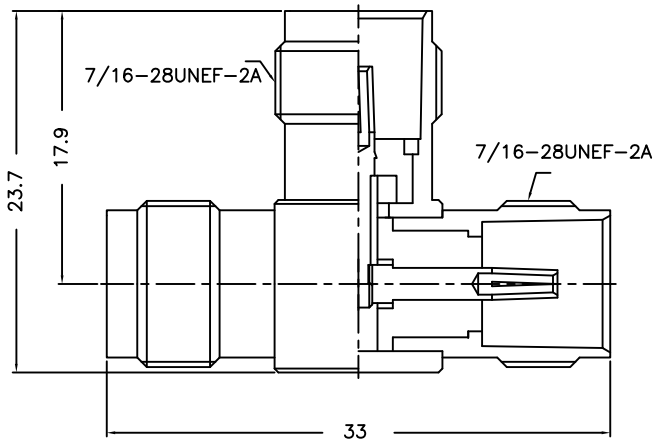

Art No.	KLS P/N	Suitable Cable	Size B	C	D	E	F
37-622-49		RG58/U					

KLS electronic
www.cnkls.com

TNC Plugs Right Angle Crimp



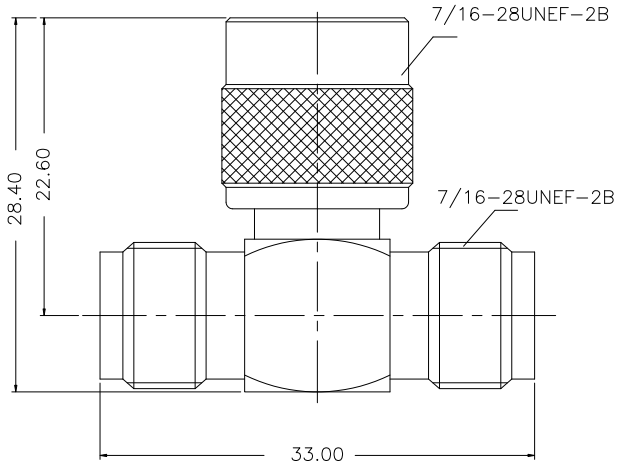

Art No.	KLS P/N	Suitable Cable	Size B	C	D	E	F
37-622-49		RG58/U					

Under construction



BNC Connectors

KLS offers 50 and 75 ohm BNC connectors. Please visit following pages for details.

The **BNC** connector (Bayonet Neill–Concelman) is a common type of RF connector used for coaxial cable. It is used with radio, television, and other radio-frequency electronic equipment, test instruments, video signals, and was once a popular computer network connector.

The **BNC** connectors are made to match the characteristic impedance of cable at either 50 ohms or 75 ohms.It is usually applied for frequencies below 3 GHz [1] and voltages below 500 Volts. [2] Similar connectors husing the bayonet connection principle exist, and a threaded connector is also available.

Family:

BNC Plugs | BNC Jacks | BNC Adapters

Under construction

KLS electronic
www.cnkls.com

Material

Body and outer contacts	Brass, nickel plated
Male contact	Brass, gold plated
Female contact	Beryllium copper or phosphor bronze, gold or silver plated
Crimp ferrule	Copper or brass, nickel plated
Other metal parts	Brass, nickel plated (except M39012 silver plated)
Insulator	PTFE, copolymer of styrene, glass TFE (hermetically sealed)
Gasket	Silicone rubber

Dimension (Unit/Inch/1 inch=25.4mm)

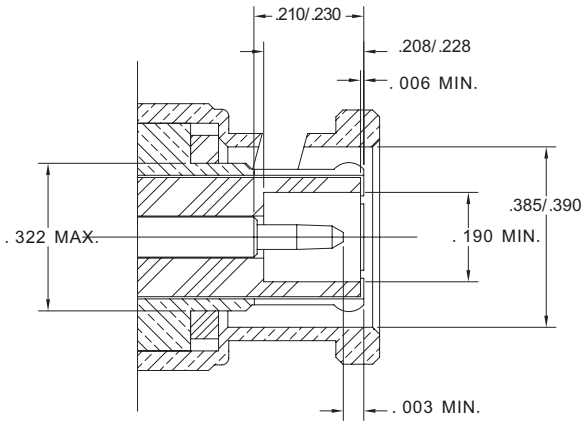

Plug

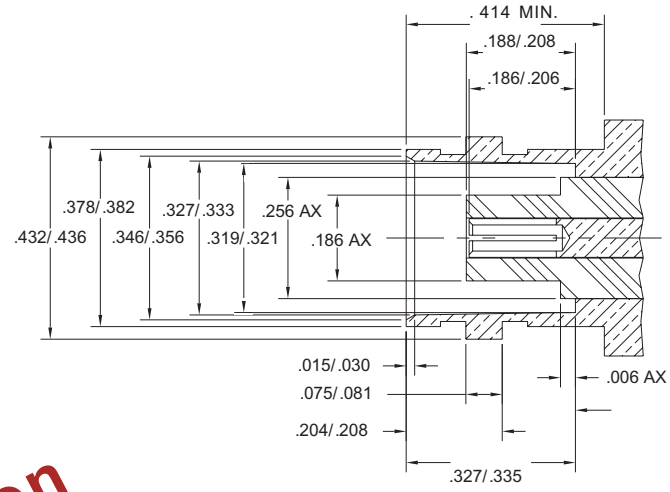

Jack

Under construction

Main characteristic

Temperature Range	-65 ~ +165 ° C (PE Cable -40 ~ +85 ° C)
Vibration	MIL-STD-202, Method 213
Impedance	50Ω, 75Ω
Frequency	Up to 4GHZ
Working Voltage	500V Max.
Dielectric withstanding Voltage	1500V rms
Contact resistance between internal contact	≤ 1.5 mΩ
Contact resistance between outer conduct:	≤ 1 mΩ
Insulation resistance:	≥ 5000 MΩ
VSWR Straight:	≤ 1.22
VSWR curved:	≤ 1.30
The Durability:	≥ 500 times(cycles)

Meet Standard

MIL-C-39012
CECC 22120
IEC 60169-8

KLS electronic
www.cnkls.com

BNC Plugs Straight Crimp



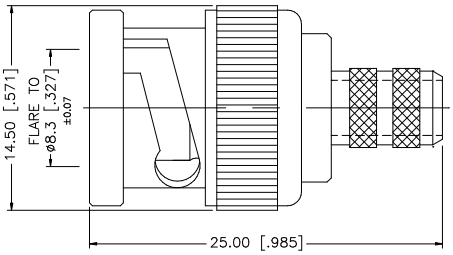

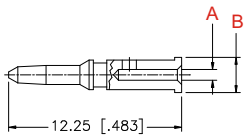

Dimension/Inch

Art No.	KLS P/N	Suitable Cable	Size A	Size B
37-622-49		RG58/U		
37-622-50		RG59/U		
37-622-51		RG174/U		

RP-BNC Plugs Straight Crimp



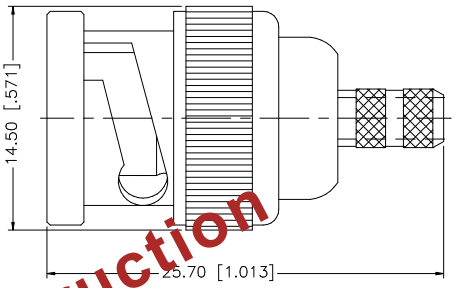

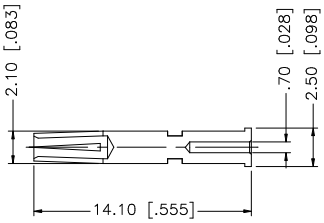

Under construction

Art No.	KLS P/N	Suitable Cable	Size A	Size B
37-622-49		RG58/U		
37-622-50		RG59/U		
37-622-51		RG174/U		

* RP-TNC : Reverse-polarity TNC

BNC Plugs Right Angle Crimp

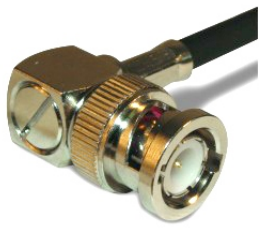

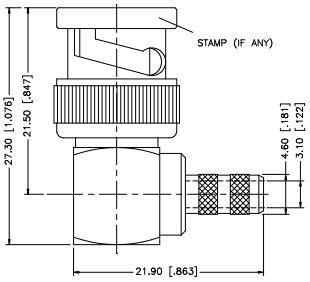

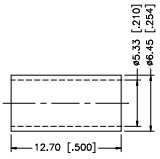

Art No.
37-622-49
37-622-50
37-622-51

BNC Plugs Straight Screw Connection



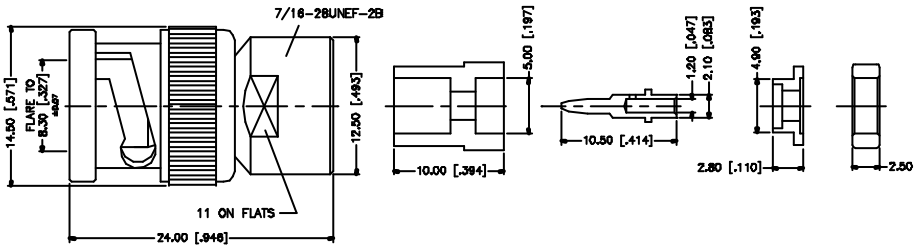

Art No.	KLS P/N	Suitable Cable	Size A	Size B
37-622-49		RG58/U		
37-622-50		RG59/U		
37-622-51		RG174/U		

BNC Plugs Straight Solder Cup Bulkhead



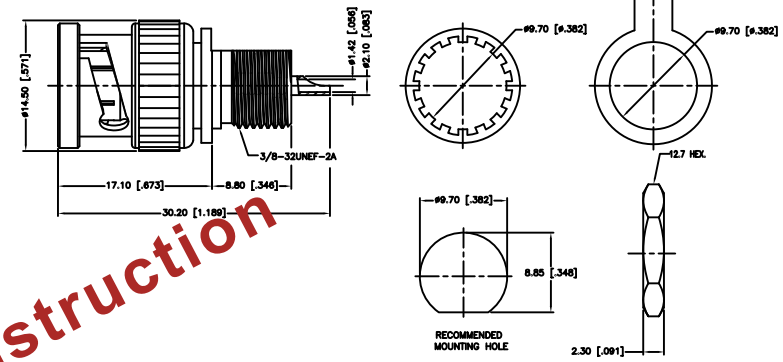

Under construction

Art No.	KLS P/N	Suitable Cable	Size A	Size B
37-622-49		RG58/U		
37-622-50		RG59/U		
37-622-51		RG174/U		

BNC Plugs Straight Solder Cup Flange Pannel Mount



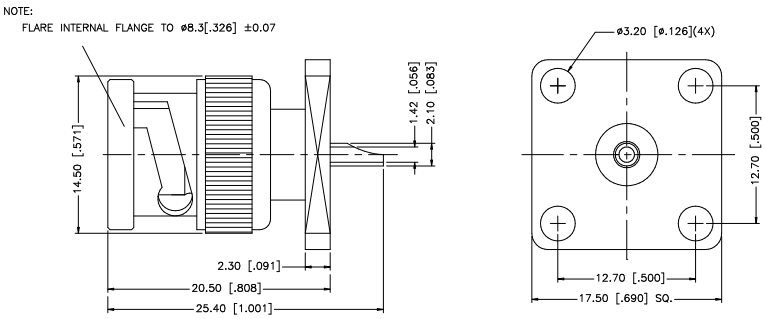

Art No.
37-622-49
37-622-50
37-622-51

KLS electronic
www.cnkls.com

BNC Plugs Straight Twist-On



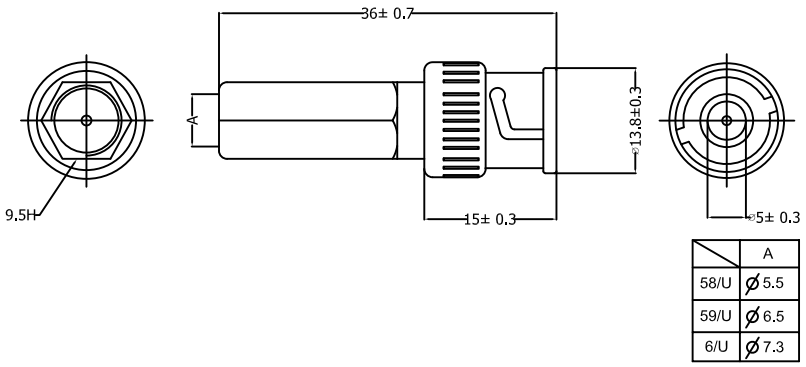

	A
58/U	Ø5.5
59/U	Ø6.5
6/U	Ø7.3

Art No.	KLS P/N	Suitable Cable	Size A	Size B
37-622-49		RG58/U		
37-622-50		RG59/U		
37-622-51		RG174/U		

BNC Plugs Right Angle Twist-On



Under construction

Art No.	KLS P/N	Suitable Cable	Size A	Size B
37-622-49		RG58/U		
37-622-50		RG59/U		
37-622-51		RG174/U		

BNC Plugs Right Angle Cable Strain Relief

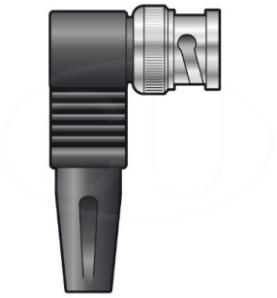

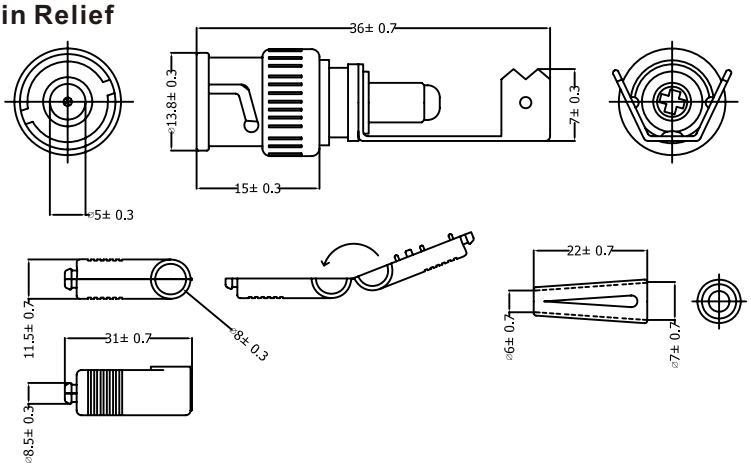

Art No.
37-622-49
37-622-50
37-622-51

All specifcation & Dimension are subject to change , please call to KLS

KLS electronic
www.cnkls.com

BNC Plugs Straight Cable Strain Relief



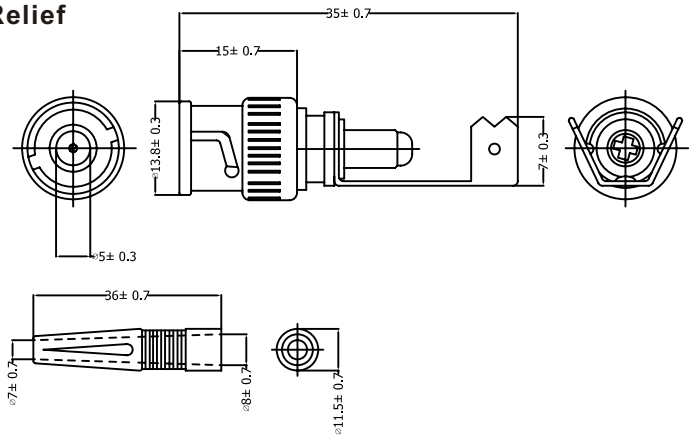

Art No.	KLS P/N	Suitable Cable	Size A	Size B
37-622-49		RG58/U		
37-622-50		RG59/U		
37-622-51		RG174/U		

Under construction

BNC Jacks and Adapters

BNC Jacks Straight Crimp



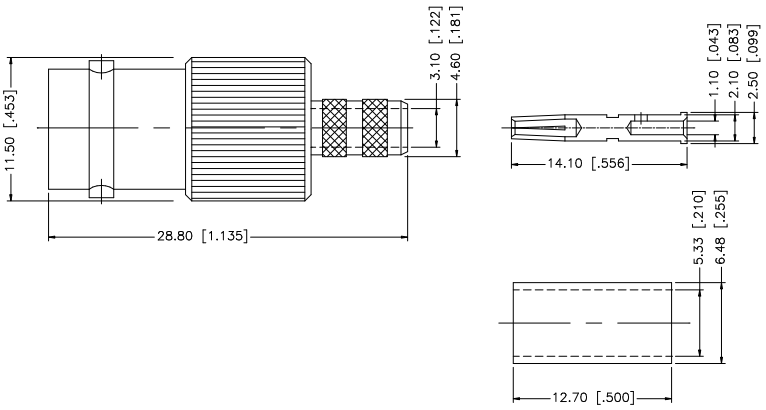

Art No.
37-622-49
37-622-50
37-622-51

All specifcation & Dimension are subject to change , please call to KLS

KLS electronic
www.cnkls.com

I

BNC Jacks Straight Crimp Bulkhead Pannel Mount



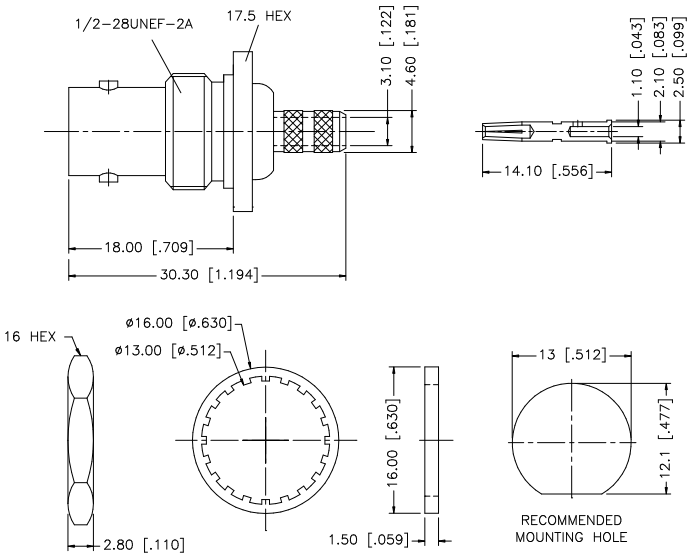

Art No.	KLS P/N	Suitable Cable	Size A	Size B
37-622-49		RG58/U		
37-622-50		RG59/U		
37-622-51		RG174/U		

BNC Jacks Straight Crimp Flange 4 Screw Holes



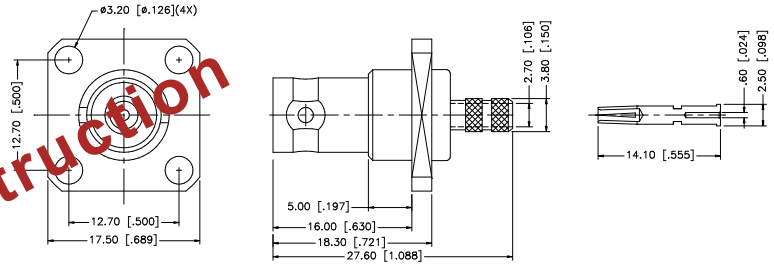

Under construction

Art No.	KLS P/N	Suitable Cable	Size A	Size B
37-622-49		RG58/U		
37-622-50		RG59/U		
37-622-51		RG174/U		

BNC Jacks Straight Screw Connection



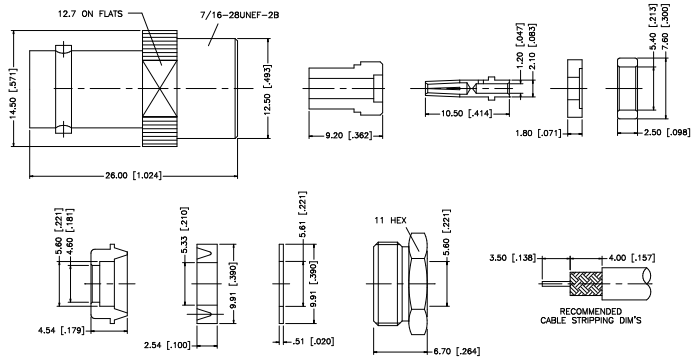

Art No.
37-622-49
37-622-50
37-622-51

All specifcation & Dimension are subject to change , please call to KLS

■ BNC Jacks Straight PCB Through Hole



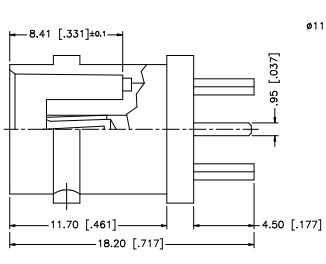

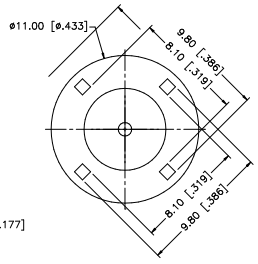

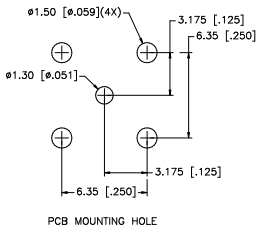

Art No.	KLS P/N	Suitable Cable	Size A	Size B
37-622-49		RG58/U		
37-622-50		RG59/U		
37-622-51		RG174/U		

■ BNC Jacks Straight PCB Through Hole



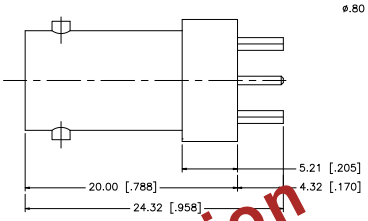

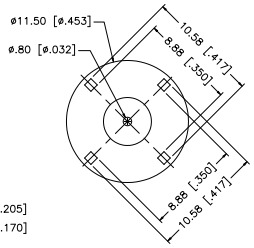

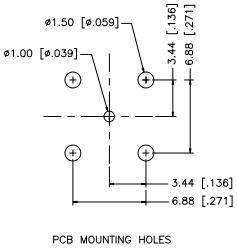

Under construction

Art No.	KLS P/N	Suitable Cable	Size A	Size B
37-622-49		RG58/U		

■ BNC Jacks Straight PCB Through Hole



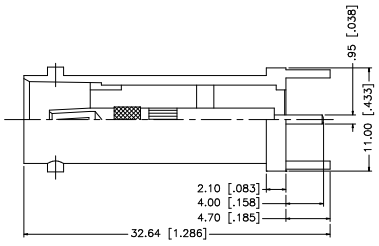

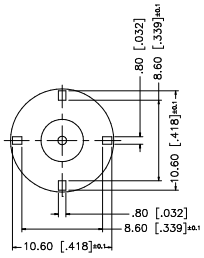

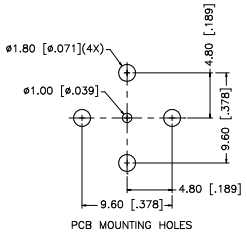

Art No.
37-622-49
37-622-50
37-622-51

All specifcation & Dimension are subject to change , please call to KLS

KLS electronic
www.cnkls.com

BNC Jacks Straight PCB Through Hole



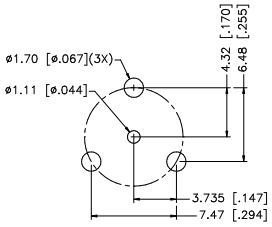

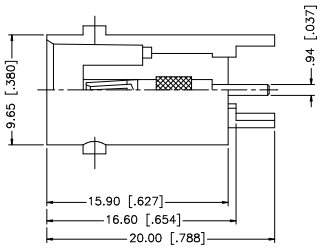

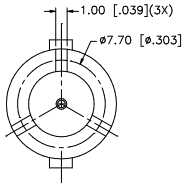

Art No.	KLS P/N	Suitable Cable	Size A	Size B
37-622-49		RG58/U		
37-622-50		RG59/U		
37-622-51		RG174/U		

BNC Jacks Straight Flange Solder Cup



112290

Under construction

Art No.	KLS P/N	Suitable Cable	Size A	Size B
37-622-49		RG58/U		

BNC Jacks Straight PCB Through Hole



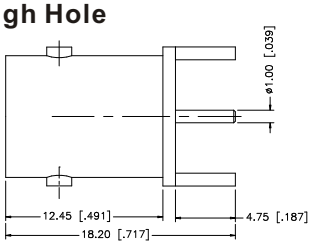

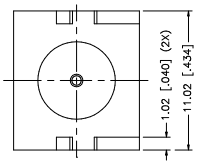

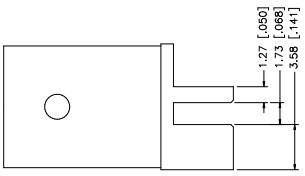

Art No.
37-622-49
37-622-50
37-622-51

BNC Jacks Straight PCB Through Hole Plastic Housing Bulkhead



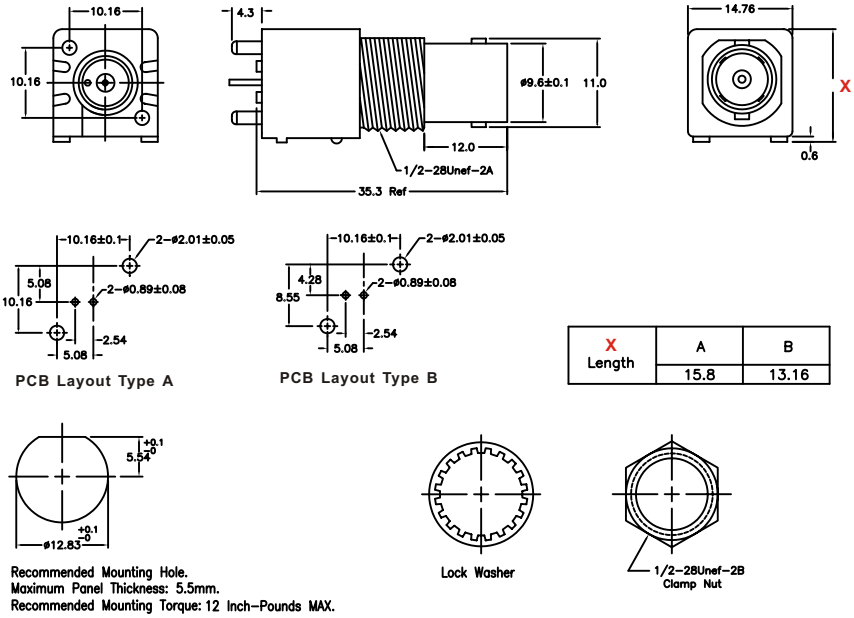

X Length	A	B
	15.8	13.16

Art No.	KLS P/N	Suitable Cable	Size A	Size B
37-622-49		RG58/U		
37-622-50		RG59/U		

BNC Jacks Right Angle PCB Through Hole Plastic Housing Bulkhead



Under construction

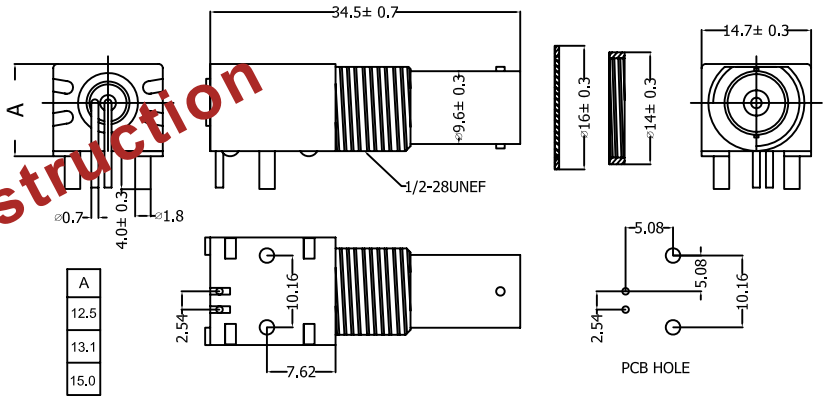

Art No.	KLS P/N	Suitable Cable	Size A	Size B
37-622-49		RG58/U		

BNC Jacks Right Angle PCB Through Hole Metal Housing



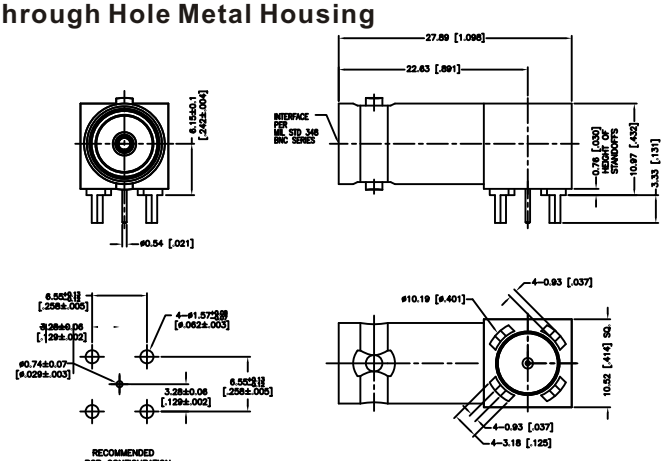

Art No.	KLS P/N	Suitable Cable	Size A	Size B
37-622-49		RG58/U		

■ BNC Jacks Straight PCB Through Hole Metal Housing



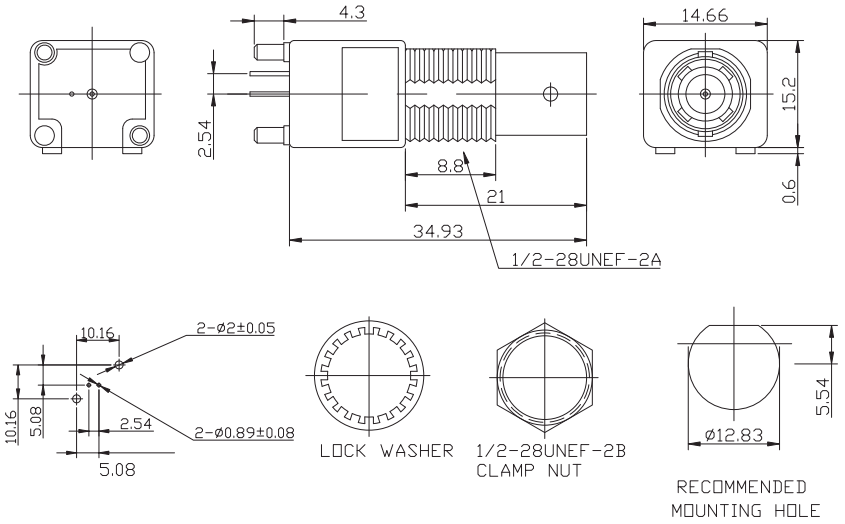

Art No.	KLS P/N	Suitable Cable	Size A	Size B
37-622-49		RG58/U		
37-622-50		RG59/U		

■ BNC Jacks Right Angle PCB Through Hole Metal Housing Bulkhead



Under construction

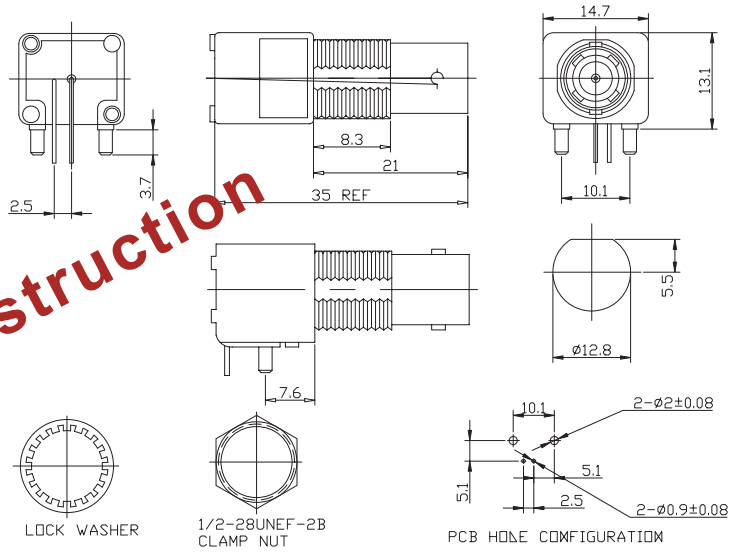

Art No.	KLS P/N	Suitable Cable	Size A	Size B
37-622-49		RG58/U		

■ BNC Jacks Right Angle PCB Through Hole Plastic Housing

Art No.	KLS P/N	Suitable Cable	Size A	Size B
37-622-49		RG58/U		

BNC Jacks Straight Solder Cup Bulkhead Isolated



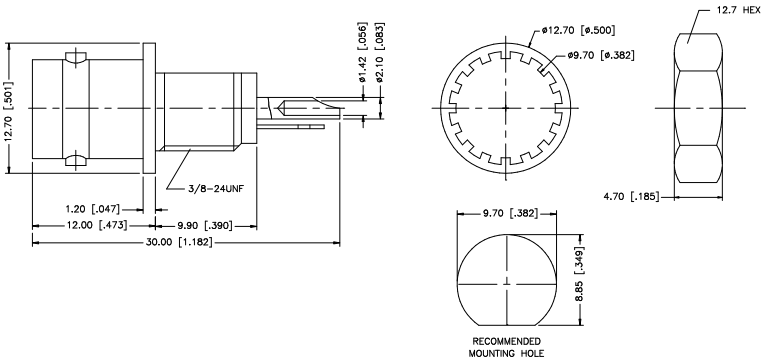

Art No.	KLS P/N	Suitable Cable	Size A	Size B
37-622-49		RG58/U		
37-622-50		RG59/U		
37-622-51		RG174/U		

BNC Jacks Straight Solder Cup Bulkhead



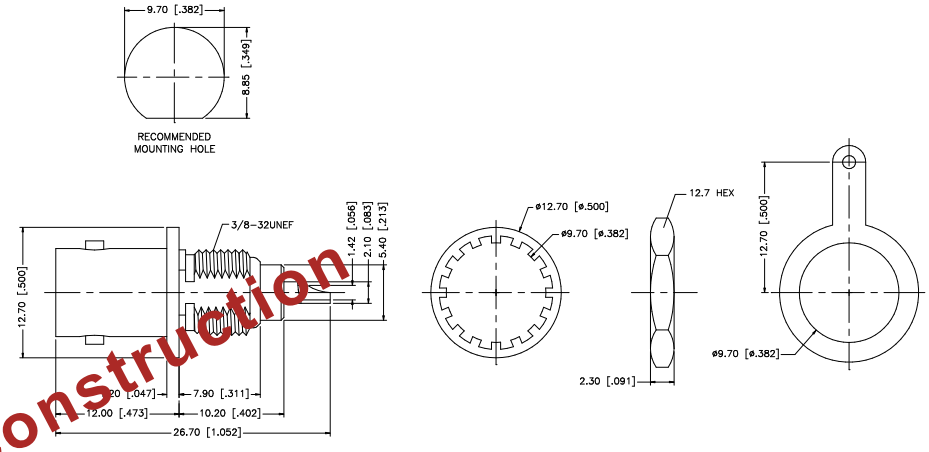

Under construction

Art No.	KLS P/N	Suitable Cable	Size A	Size B
37-622-49		RG58/U		

BNC Jacks Right Angle PCB Through Hole Plastic Housing

Art No.
37-622-49
37-622-50

BNC Adapters

BNC Adapeters BNC Plug To BNC Plug



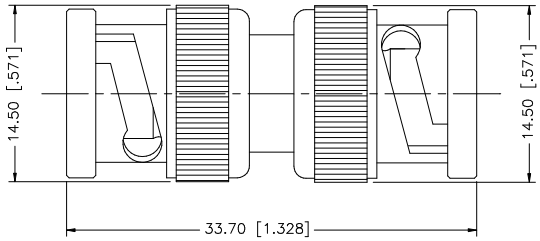

Art No.	KLS P/N	Suitable Cable	Size A	Size B
37-622-49		RG58/U		

BNC Adapeters BNC Jack To BNC Jack



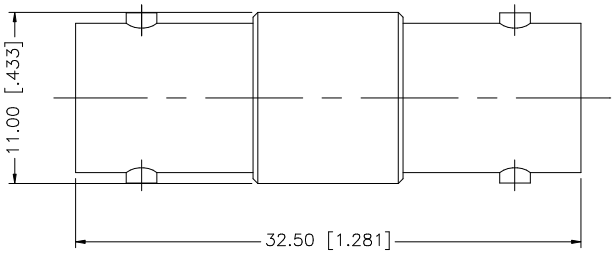

Art No.	KLS P/N	Suitable Cable	Size A	Size B
37-622-49		RG58/U		

BNC Adapeters BNC Jack To BNC Jack Flange 4 Holes



Under construction

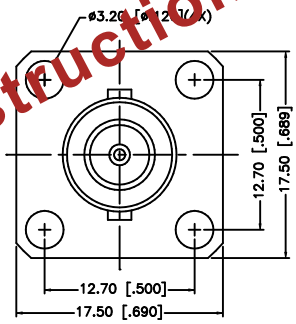

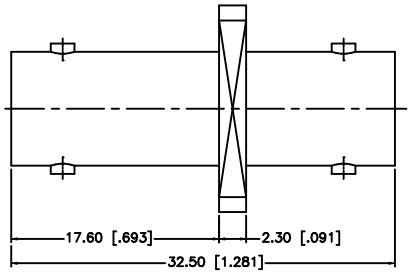

Art No.	KLS P/N	Suitable Cable	Size A	Size B
37-622-49		RG58/U		

BNC Adapeters BNC Jack To BNC Jack Bulkhead



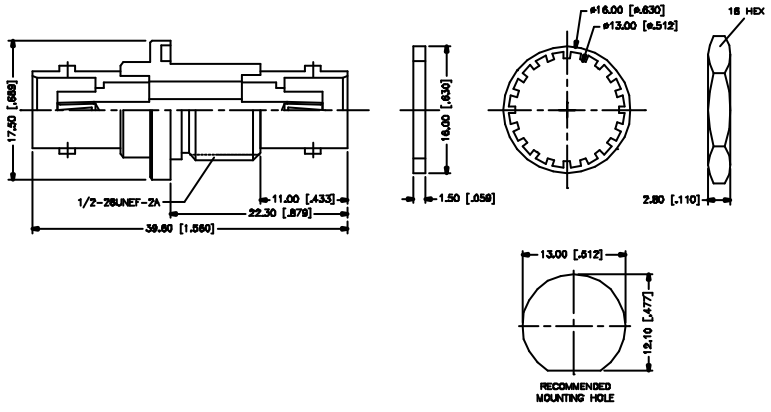

Art No.	KLS P/N	Suitable Cable	Size A	Size B
37-622-49		RG58/U		

KLS electronic
www.cnkls.com

BNC Adapeters Straight BNC Plug To BNC Jack



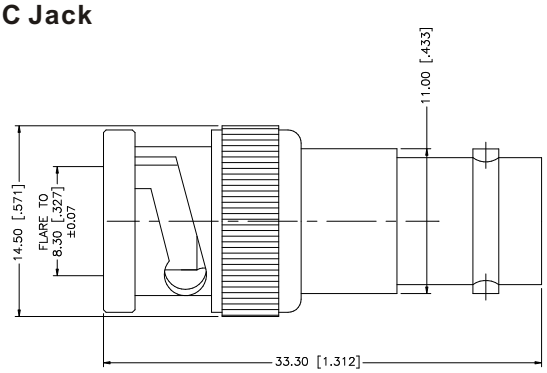

Art No.	KLS P/N	Suitable Cable	Size A	Size B
37-622-49		RG58/U		

BNC Adapeters Right angle BNC Plug To BNC Jack



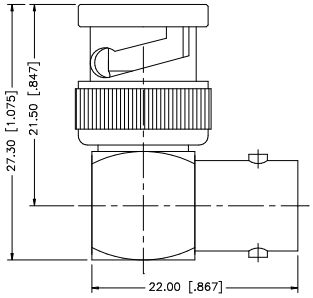

Art No.	KLS P/N	Suitable Cable	Size A	Size B
37-622-49		RG58/U		

BNC TEE Adapeters Jack-Plug-Jack

Under construction



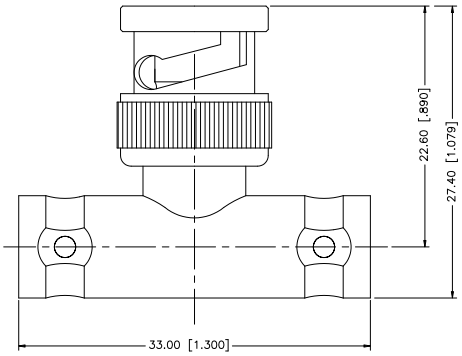

Art No.	KLS P/N	Suitable Cable	Size A	Size B
37-622-49		RG58/U		

BNC TEE Adapeters Plug-Jack-Jack



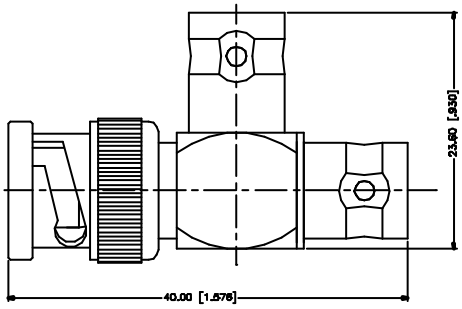

Art No.	KLS P/N	Suitable Cable	Size A	Size B
37-622-49		RG58/U		

All specifcation & Dimension are subject to change , please call to KLS

KLS electronic
www.cnkls.com

BNC TEE Adapeters Jack-Jack-Jack



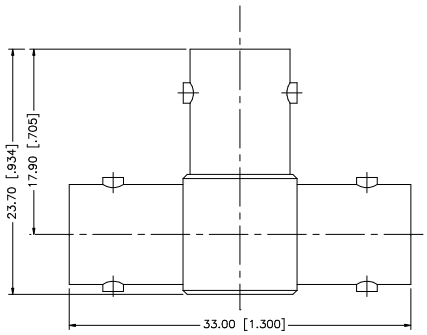

Art No.	KLS P/N	Suitable Cable	Size A	Size B
37-622-49		RG58/U		

Under construction

F Connectors Series

KLS1-F001



ORDER INFORMATION

Product No. : KLS1-F001

Pos. NO.
Part NO.

All specification & dimensions are subject to change, Please call your nearest KLS sales represesntative for update information

F Connectors Series

KLS1-F002



ORDER INFORMATION

Product No. : KLS1-F002

Pos. NO.
Part NO.

All specification & dimensions are subject to change, Please call your nearest KLS sales represesntative for update information

F Connectors Series

KLS1-F003



ORDER INFORMATION

Product No. : KLS1-F003

Pos. NO.
Part NO.

All specification & dimensions are subject to change, Please call your nearest KLS sales represesntative for update information

F Connectors Series

KLS1-F004



F Male For 8mm Cable

ORDER INFORMATION

Product No. : KLS1-F004

Pos. NO.
Part NO.

All specification & dimensions are subject to change, Please call your nearest KLS sales represesntative for update information

F Connectors Series

KLS1-F005



F Male For 9mm Cable

ORDER INFORMATION

Product No. : KLS1-F005

Pos. NO.
Part NO.

All specification & dimensions are subject to change, Please call your nearest KLS sales represesntative for update information

F Connectors Series

KLS1-F006



F Male For 7mm Cable

ORDER INFORMATION

Product No. : KLS1-F006

Pos. NO.
Part NO.

All specification & dimensions are subject to change, Please call your nearest KLS sales represesntative for update information

F Connectors Series

KLS1-F007



ORDER INFORMATION

Product No. : KLS1-F007

Pos. NO.
Part NO.

N type Connector Series

KLS1-N001 N Type Connector Series

Electrical Specifications

Impedance: 50 Ω
Frequency Range: 0 - 11 GHz
Voltage Rating:1,500 volts peak
VSWR: straight connectors: 1.3 Max. 0-11 GHz
right angle connectors: 1.35 Max. 0-11 GHz
Dielectric Withstanding Voltage: 2,500 volts rms
Insulation Resistance: 5,000 MΩ Min.
Center Contact Resistance: 1.0 mΩ
Outer Contact Resistance: 0.2 mΩ
RF Leakage: -90 dB Min. at 3 GHz
Insertion Loss:0 .15 dB Max. at 10 GHz
Temperature Range: -65°C to +165°C



Material

Male Contacts: Brass, silver or gold plated
Female Contacts: Phosphorous bronze , silver or gold plated
Other Metal Parts: Brass
Insulators: TFE
Weatherproof Gaskets: Silicone rubber
Crimp Ferrule: Copper

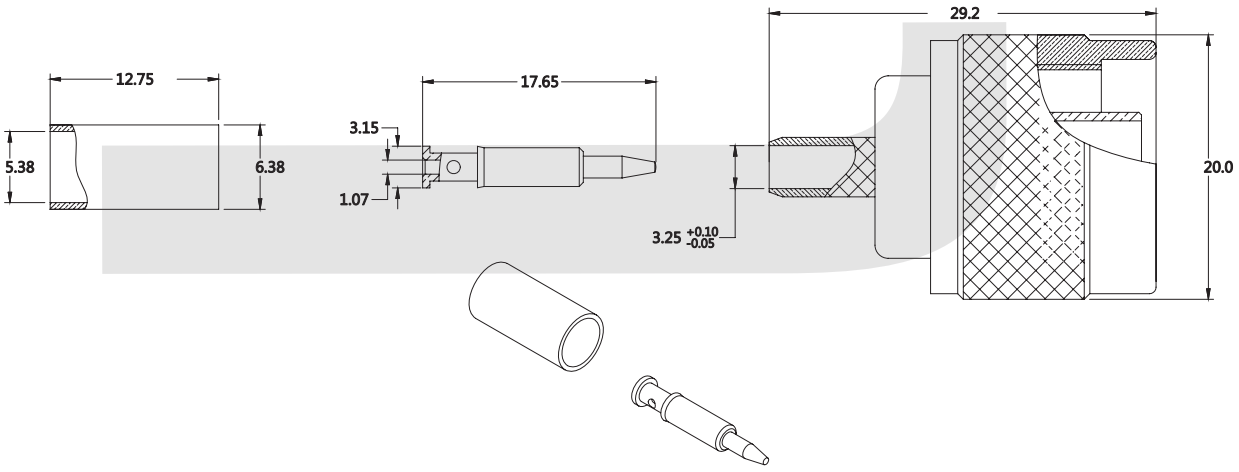

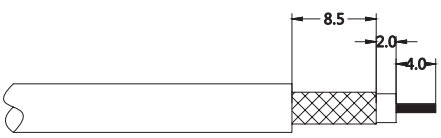

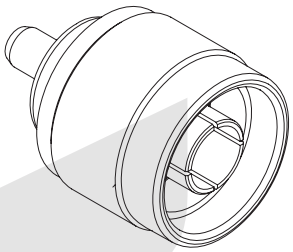

CABLE STRIP DIMENSIONS
ASSEMBLY INSTRUCTIONS ON SHEET 2

ORDER INFORMATION

Product NO.: KLS1- N001

Pos. NO.
N Type Connector Type

N Connectors Series

KLS1-N002



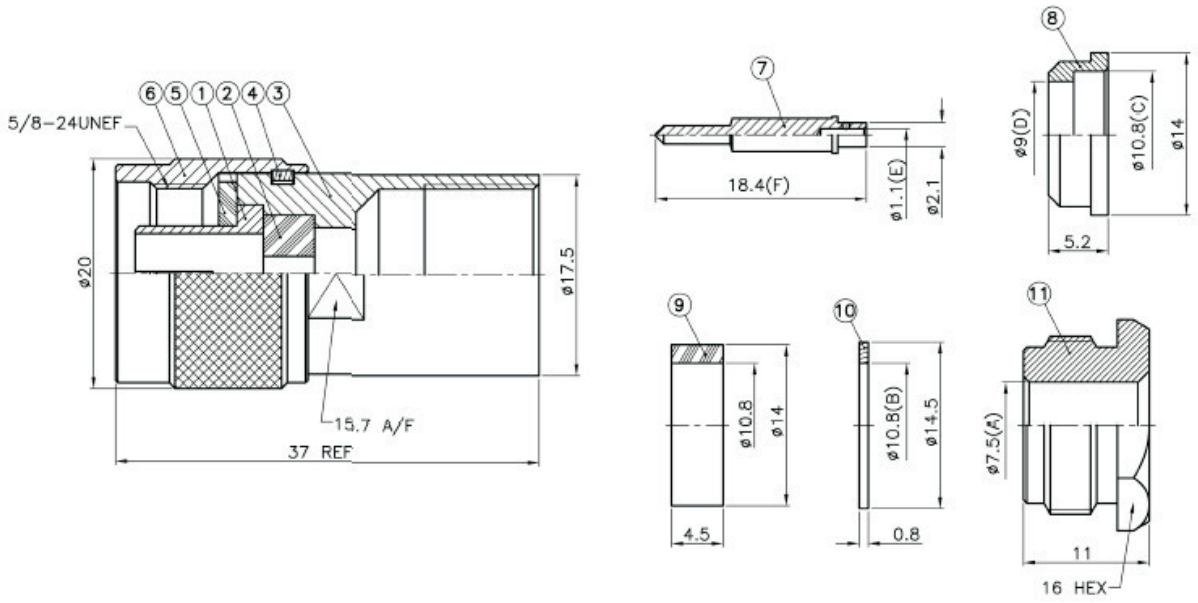

ORDER INFORMATION

Product No. : KLS1-N002

Pos. NO.
Part NO.

N Connectors Series

I

KLS1-N003



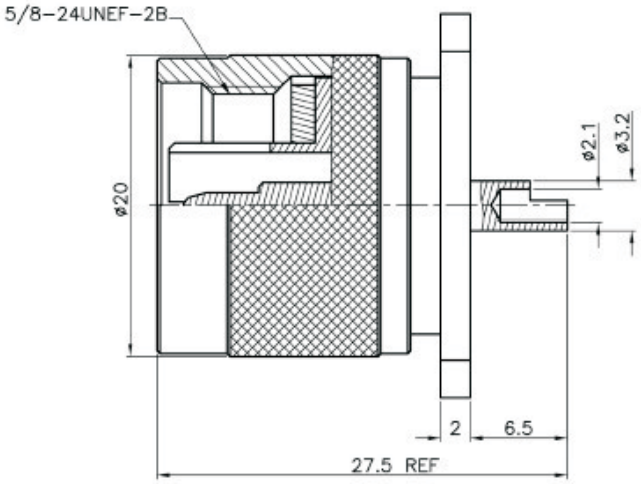

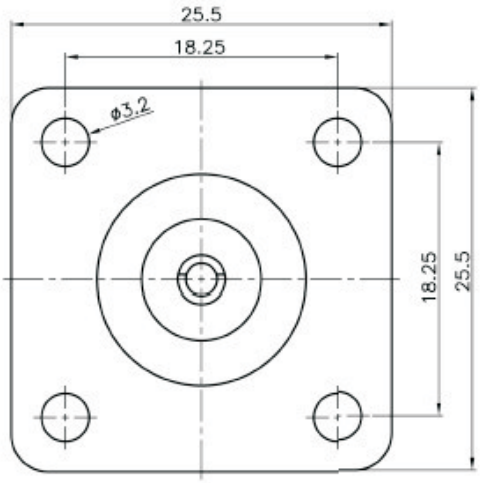

ORDER INFORMATION

Product No. : KLS1-N003

Pos. NO.
Part NO.

N Connectors Series

KLS1-N004



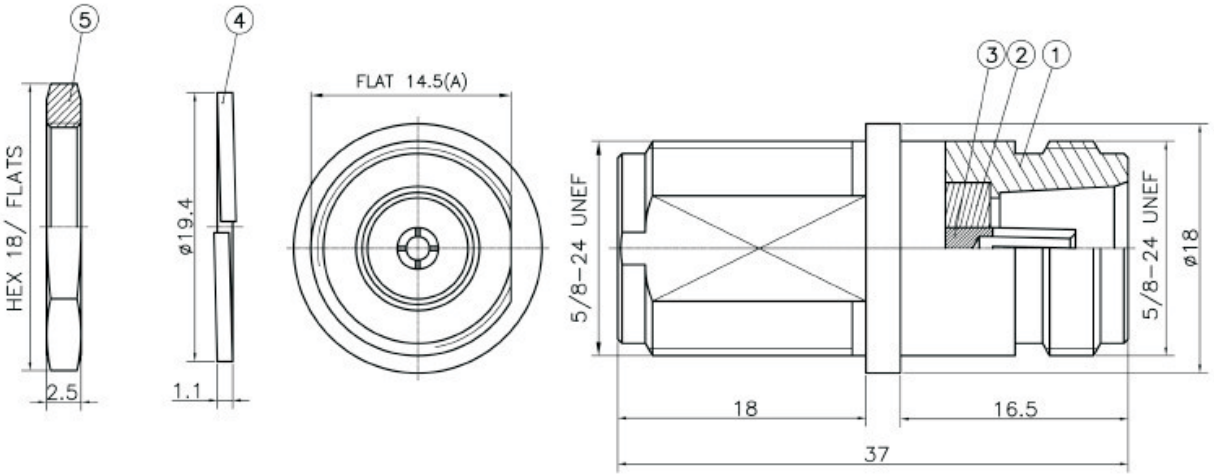

ORDER INFORMATION

Product No. : KLS1-N004

Pos. NO.
Part NO.

N Connectors Series

I

KLS1-N005



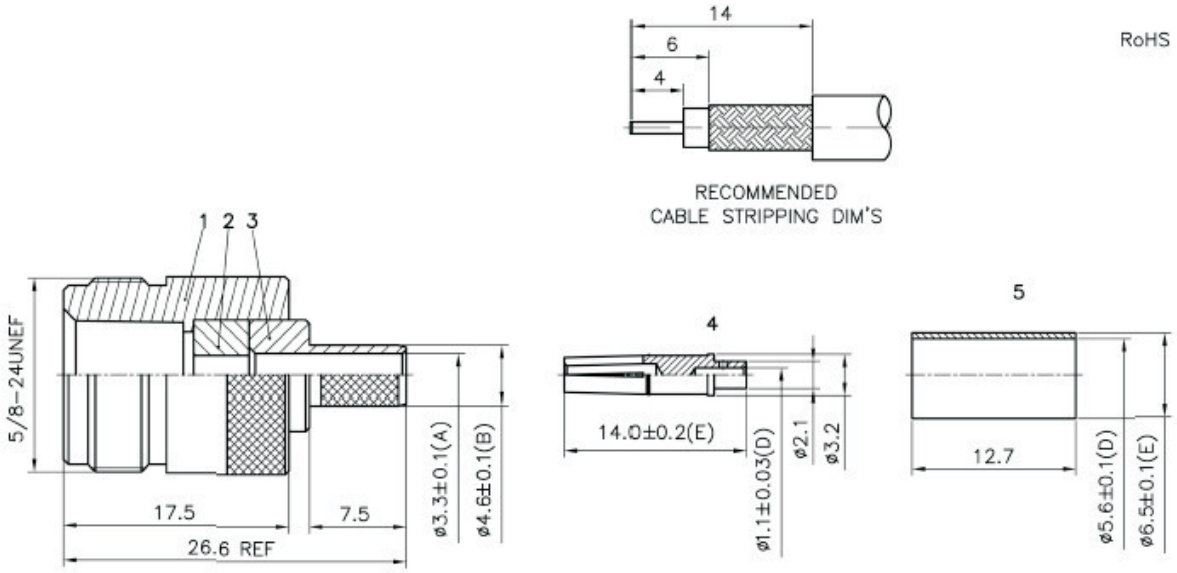

ORDER INFORMATION

Product No. : KLS1-N005

Pos. NO.
Part NO.

N Connectors Series

KLS1-N006



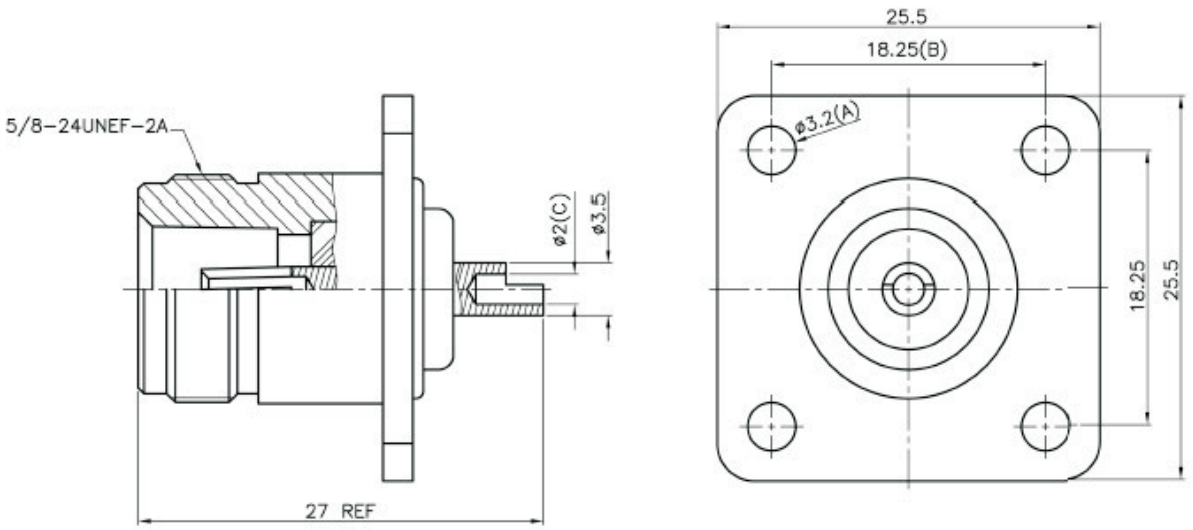

ORDER INFORMATION

Product No. : KLS1-N006

Pos. NO.
Part NO.

N Connectors Series

I

KLS1-N007



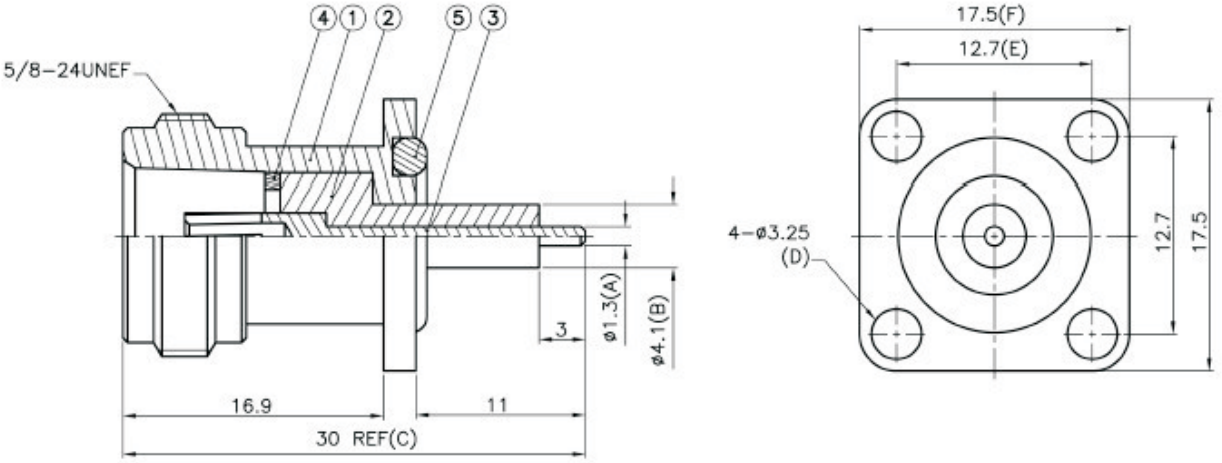

ORDER INFORMATION

Product No. : KLS1-N007

Pos. NO.
Part NO.

N Connectors Series

KLS1-N008



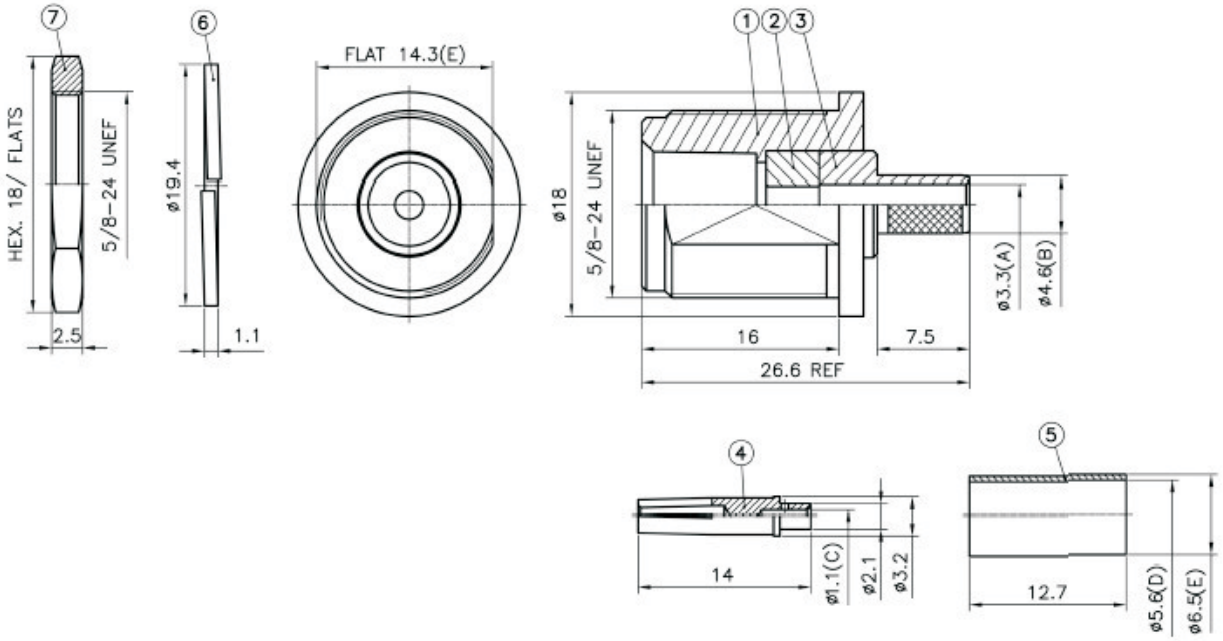

ORDER INFORMATION

Product No. : KLS1-N008

Pos. NO.
Part NO.

MCX Connector Series

KLS1-MCX001 MCX Connector Series

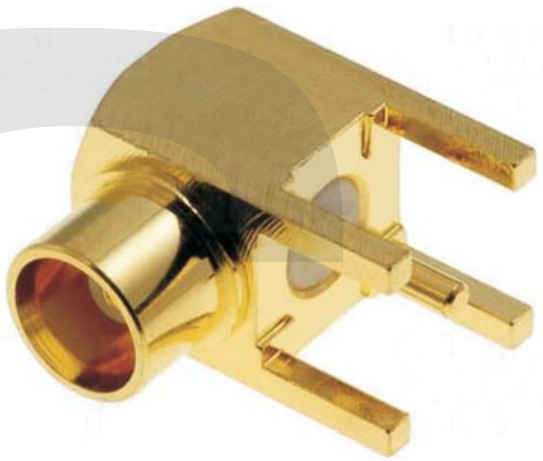

Electrical Specifications
Impedance:50Ω
Frequency Range: DC - 6 GHz
VSWR: 1.06 max. @ DC - 2.5 GHz (straight)
1.1 max. @ DC - 2.5 GHz (right angle)
RF-Leakage :60 dB Min. @ 1 GHz (flexible cable)
70 dB Min. @ 1 GHz (semi-rigid cable)
Voltage Rating (at sea level):335 Vrms Min.
Contact Resistance:Center Contact: 5 mΩ Max.
Outer Contact:2.5 mΩ Max.
Insulation Resistance:10,000 MΩ Min.
Insertion Loss Max.: 0.10 dB @ 1 GHz
Dielectric Withstanding Voltage: 1,000 Vrms (at sea level)

Mechanical
Mating:Snap-on coupling
Braid/Jacket Cable Affixment:Hex crimp
Center Conductor Cable Affixment:Solder
Contact Captivation:2.3 lbs (10N) Min.
Engagement Force :5.6 lbs (25N) Max.
Disengagement Force:2.3 lbs (10N) Min.
Durability (matings) 500 cycles Min.
Temperature Range -55°C to +155°C

Material
Male Contact:Brass, 30µ gold plated
Female Contact:Beryllium copper, 30µ gold plated
Crimp Ferrule:Copper or brass, nickel plated
Other Metal Parts: Brass, nickel or gold plated
Insulator:PTFE
Gasket :Silicone rubber

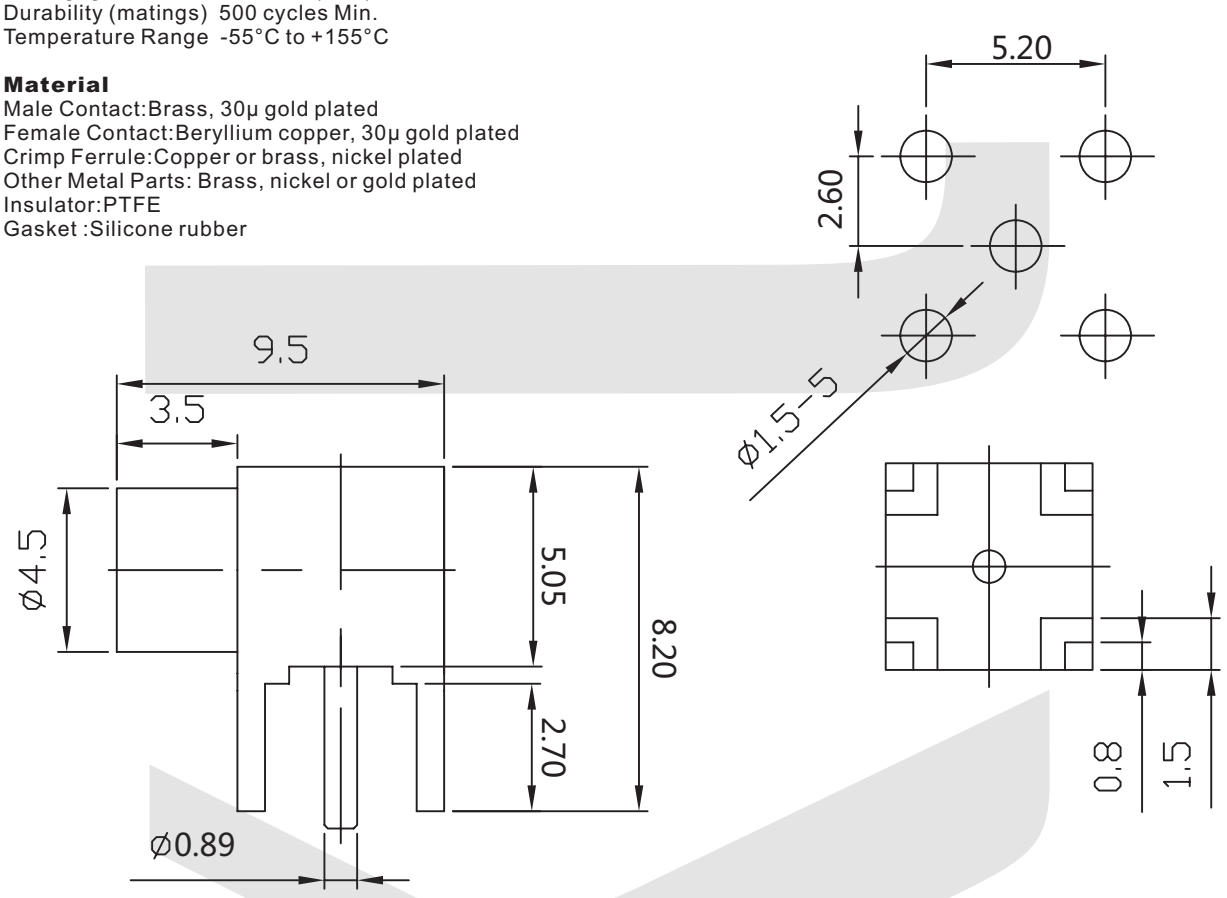

ORDER INFORMATION

Product NO.: KLS1-MCX001
Pos. NO.
MCX Connector Type

MCX Connector Series

KLS1-MCX002 MCX Connector Series



Electrical Specifications
Impedance:50Ω
Frequency Range: DC - 6 GHz
VSWR: 1.06 max. @ DC - 2.5 GHz (straight)
1.1 max. @ DC - 2.5 GHz (right angle)
RF-Leakage :60 dB Min. @ 1 GHz (flexible cable)
70 dB Min. @ 1 GHz (semi-rigid cable)
Voltage Rating (at sea level):335 Vrms Min.
Contact Resistance:Center Contact: 5 mΩ Max.
Outer Contact:2.5 mΩ Max.
Insulation Resistance:10,000 MΩ Min.
Insertion Loss Max.: 0.10 dB @ 1 GHz
Dielectric Withstanding Voltage: 1,000 Vrms (at sea level)

Mechanical
Mating:Snap-on coupling
Braid/Jacket Cable Affixment:Hex crimp
Center Conductor Cable Affixment:Solder
Contact Captivation:2.3 lbs (10N) Min.
Engagement Force :5.6 lbs (25N) Max.
Disengagement Force:2.3 lbs (10N) Min.
Durability (matings) 500 cycles Min.
Temperature Range -55°C to +155°C

Material
Male Contact:Brass, 30µ gold plated
Female Contact:Beryllium copper, 30µ gold plated
Crimp Ferrule:Copper or brass, nickel plated
Other Metal Parts: Brass, nickel or gold plated
Insulator:PTFE
Gasket :Silicone rubber

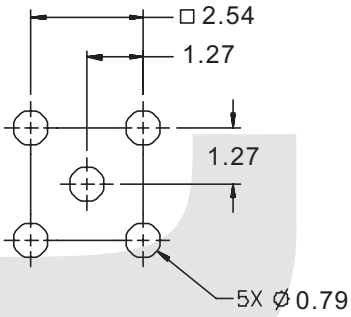

MOUNTING HOLE LAYOUT

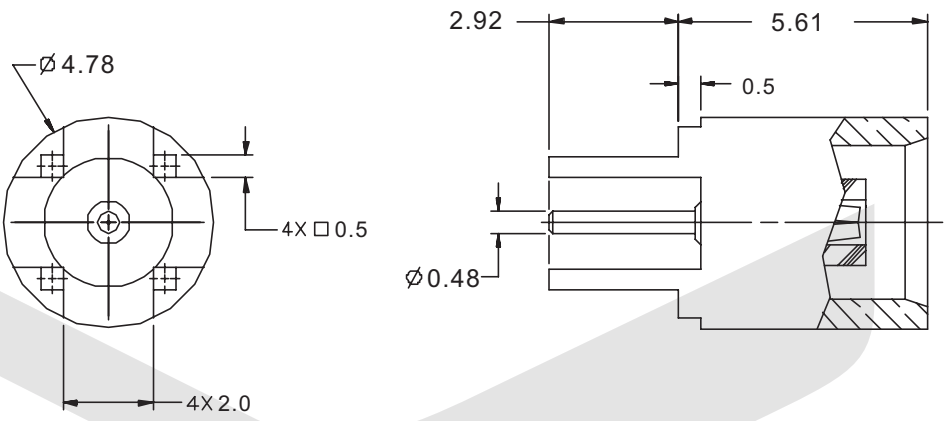

ORDER INFORMATION

Product NO.: KLS1-MCX002

Pos. NO.

MCX Connector Type

MCX Connector Series

KLS1-MCX003 MCX Connector Series

Electrical Specifications
Impedance:50Ω
Frequency Range: DC - 6 GHz
VSWR: 1.06 max. @ DC - 2.5 GHz (straight)
1.1 max. @ DC - 2.5 GHz (right angle)
RF-Leakage :60 dB Min. @ 1 GHz (flexible cable)
70 dB Min. @ 1 GHz (semi-rigid cable)
Voltage Rating (at sea level):335 Vrms Min.
Contact Resistance:Center Contact: 5 mΩ Max.
Outer Contact:2.5 mΩ Max.
Insulation Resistance:10,000 MΩ Min.
Insertion Loss Max.: 0.10 dB @ 1 GHz
Dielectric Withstanding Voltage: 1,000 Vrms (at sea level)

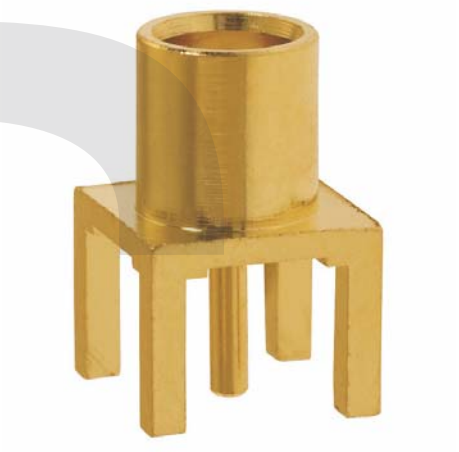

Mechanical
Mating:Snap-on coupling
Braid/Jacket Cable Affixment:Hex crimp
Center Conductor Cable Affixment:Solder
Contact Captivation:2.3 lbs (10N) Min.
Engagement Force :5.6 lbs (25N) Max.
Disengagement Force:2.3 lbs (10N) Min.
Durability (matings) 500 cycles Min.
Temperature Range -55°C to +155°C

Material
Male Contact:Brass, 30µ gold plated
Female Contact:Beryllium copper, 30µ gold plated
Crimp Ferrule:Copper or brass, nickel plated
Other Metal Parts: Brass, nickel or gold plated
Insulator:PTFE
Gasket :Silicone rubber

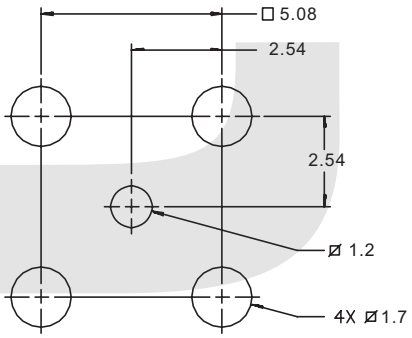

MOUNTING HOLE LAYOUT

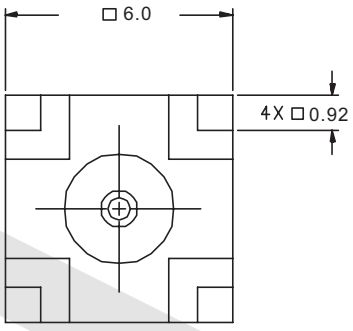

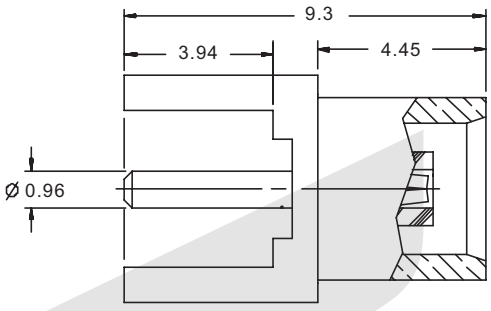

ORDER INFORMATION

Product NO.: KLS1-MCX003

Pos. NO.
MCX Connector Type

KLS1-MCX004 MCX Connector Series

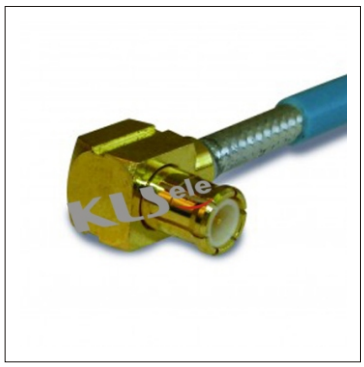

Cable Group : SFF-50-1.5-1,RG-174/U

Electrical Specification

Impedance:	50 Ω
Frequency Range:	DC - 6 GHz
VSWR:	1.06 max. @ DC - 2.5 GHz (straight)
	1.1 max. @ DC - 2.5 GHz (right angle)
RF-Leakage :	60 dB Min. @ 1 GHz (flexible cable)
	70 dB Min. @ 1 GHz (semi-rigid cable)

Voltage Rating (at sea level):≥ 335 Vrms
Contact Resistance:Center Contact: ≤ 5 mΩ
Outer Contact: ≤ 2.5 mΩ
Insulation Resistance:10,000 MΩ Min.
Insertion Loss Max.: 0.10 dB @ 1 GHz
Dielectric Withstanding Voltage: 1,000 Vrms (at sea level)

Mechanical

Mating:Snap-on coupling
Braid/Jacket Cable Affixment:Hex crimp
Center Conductor Cable Affixment:Solder
Contact Captivation:≥ 2.3 lbs (10N)
Engagement Force :≤ 5.6 lbs (25N)
Disengagement Force:≥ 2.3 lbs (10N)
Durability (matings) 500 cycles Min.
Temperature Range -55°C to +155°C

Material

Male Contact:Brass, 30μ gold plated
Female Contact:Beryllium copper, 30μ gold plated
Crimp Ferrule:Copper or brass, nickel plated
Other Metal Parts: Brass, nickel or gold plated
Insulator:PTFE
Gasket :Silicone rubber

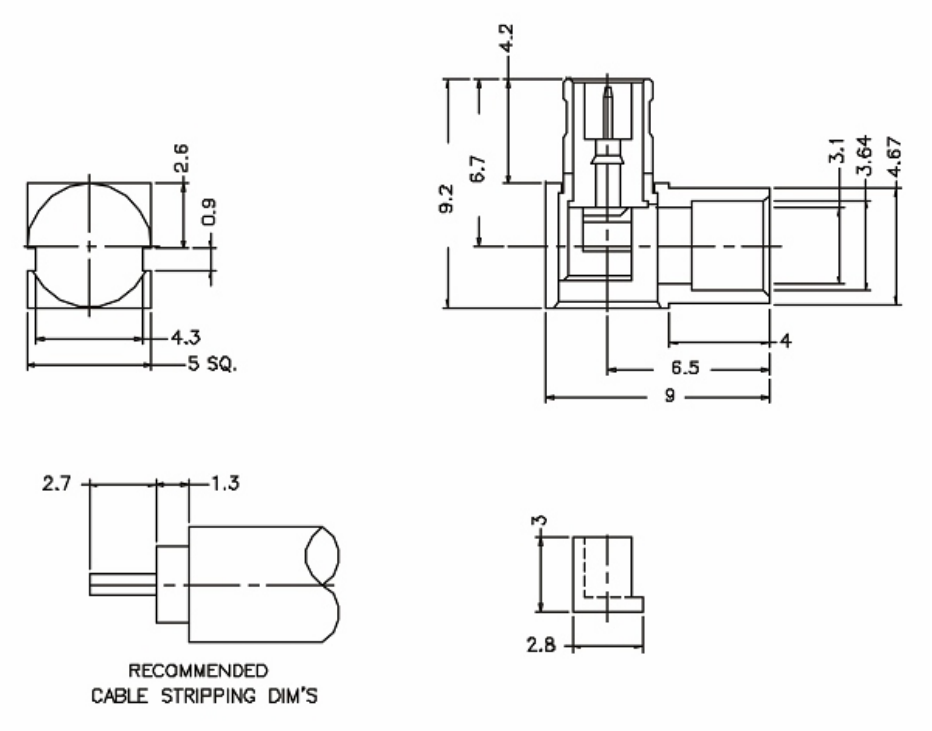

KLS1-MCX005 MCX Connector Series

Cable Group : RG-316 Double Braid



Electrical Specification

Impedance:	50 Ω
Frequency Range:	DC - 6 GHz
VSWR:	1.06 max. @ DC - 2.5 GHz (straight)
	1.1 max. @ DC - 2.5 GHz (right angle)
RF-Leakage :	60 dB Min. @ 1 GHz (flexible cable)
	70 dB Min. @ 1 GHz (semi-rigid cable)
Voltage Rating (at sea level):	≥ 335 Vrms
Contact Resistance:	Center Contact: ≤ 5 mΩ
	Outer Contact: ≤ 2.5 mΩ
Insulation Resistance:	10,000 MΩ Min.
Insertion Loss Max.:	0.10 dB @ 1 GHz
Dielectric Withstanding Voltage:	1,000 Vrms (at sea level)

Mechanical

Mating:Snap-on coupling
Braid/Jacket Cable Affixment:Hex crimp
Center Conductor Cable Affixment:Solder
Contact Captivation:≥ 2.3 lbs (10N)
Engagement Force :≤ 5.6 lbs (25N)
Disengagement Force:≥ 2.3 lbs (10N)
Durability (matings) 500 cycles Min.
Temperature Range -55°C to +155°C

Material

Male Contact:Brass, 30μ gold plated
Female Contact:Beryllium copper, 30μ gold plated
Crimp Ferrule:Copper or brass, nickel plated
Other Metal Parts: Brass, nickel or gold plated
Insulator:PTFE
Gasket :Silicone rubber

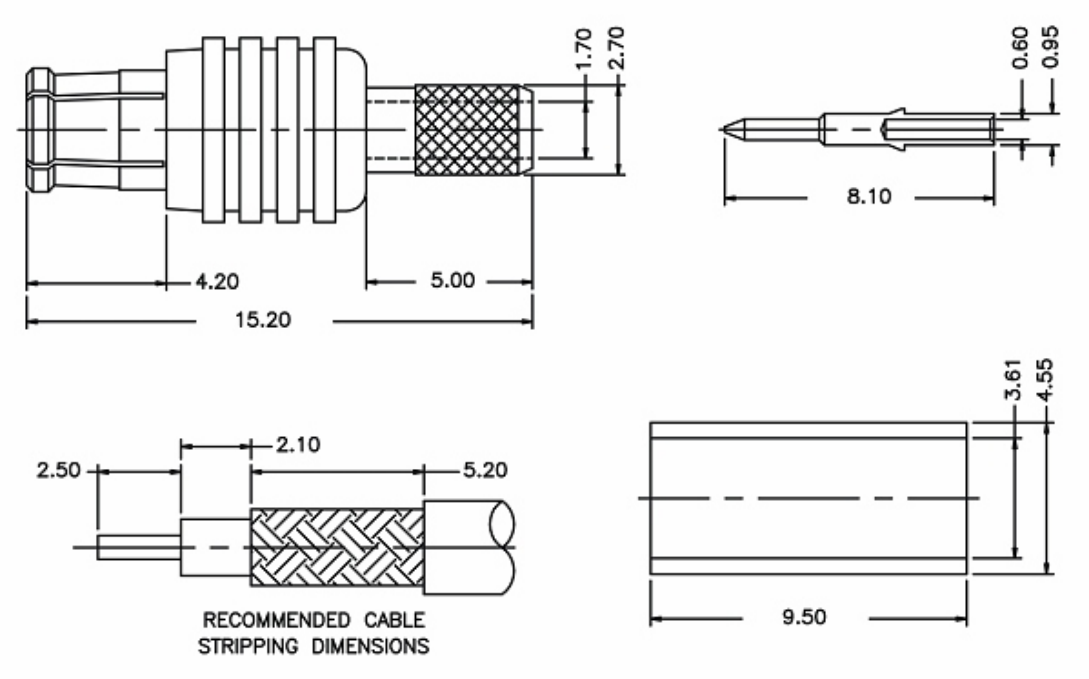

MMCX Connector Series

KLS1-MMCX001 MMCX Connector Series

Electrical Specifications
Impedance: 50 Ω
Frequency Range: DC - 6 GHz
VSWR: 1.15 max. @ DC - 4 GHz
1.40 max. @ 4 - 6 GHz
RF-Leakage: 60 dB minimum @ 1 GHz (flexible cable)
70 dB minimum @ 1 GHz (semi-rigid cable)
Voltage Rating (at sea level): 170 Vrms Max.
Contact Resistance: center contact: 10 mΩ Max.
outer contact: 5 mΩ Max.
Insulation Resistance: 1,000 MΩ Min.
Dielectric Withstanding Voltage: 500 Vrms (at sea level)



Mechanical
Mating: Snap-on coupling
Contact Captivation: 2.3 lbs
Engagement Force: 3.4 lbs (15N) Max.
Disengagement Force: 1.4 lbs (6N) Min.
Durability (matings): 500 cycles Min.
Temperature Range: -55°C to +155°C

Material
Body and Outer Contacts: Brass, nickel or gold plated
Male Contact: Brass, gold plated
Female Contact: Beryllium copper or phosphor bronze, gold plated
Crimp Ferrule: Copper or brass, nickel plated
Insulator: LCP, PTFE or PFA

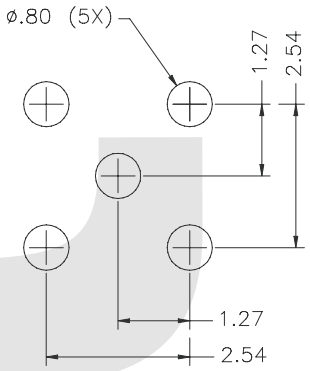

PCB MOUNTING HOLES

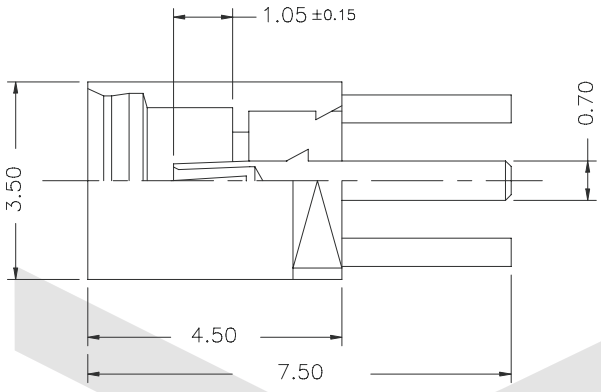

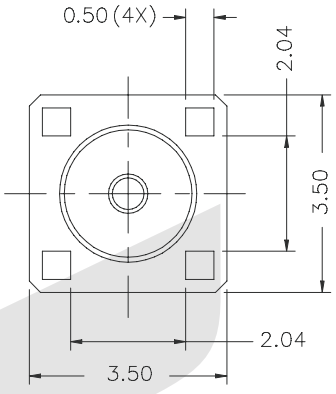

ORDER INFORMATION

Product NO.: KLS1-MMCX001

Pos. NO.
MMCX Connector Type

MMCX Connector Series

KLS1-MMCX002 MMCX Connector Series



Electrical Specifications
Impedance: 50 Ω
Frequency Range: DC - 6 GHz
VSWR: 1.15 max. @ DC - 4 GHz
1.40 max. @ 4 - 6 GHz
RF-Leakage: 60 dB minimum @ 1 GHz (flexible cable)
70 dB minimum @ 1 GHz (semi-rigid cable)
Voltage Rating (at sea level): 170 Vrms Max.
Contact Resistance: center contact: 10 mΩ Max.
outer contact: 5 mΩ Max.
Insulation Resistance: 1,000 MΩ Min.
Dielectric Withstanding Voltage: 500 Vrms (at sea level)

Mechanical
Mating: Snap-on coupling
Contact Captivation: 2.3 lbs
Engagement Force: 3.4 lbs (15N) Max.
Disengagement Force: 1.4 lbs (6N) Min.
Durability (matings): 500 cycles Min.
Temperature Range: -55°C to +155°C

Material
Body and Outer Contacts: Brass, nickel or gold plated
Male Contact: Brass, gold plated
Female Contact: Beryllium copper or phosphor bronze, gold plated
Crimp Ferrule: Copper or brass, nickel plated
Insulator: LCP, PTFE or PFA

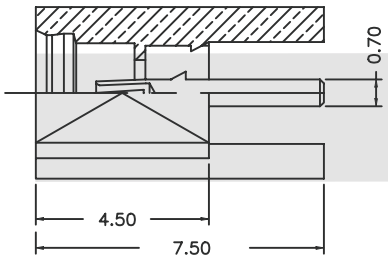

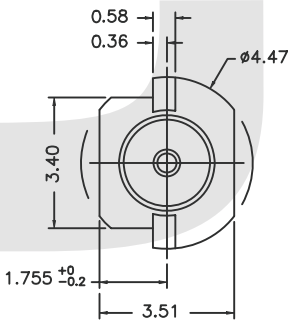

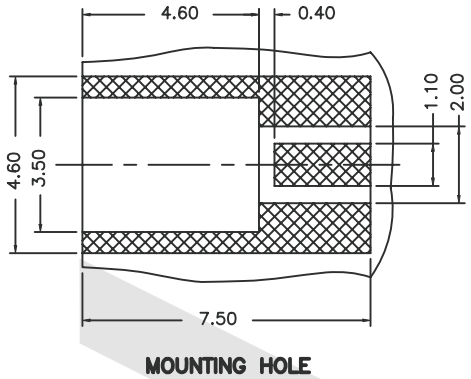



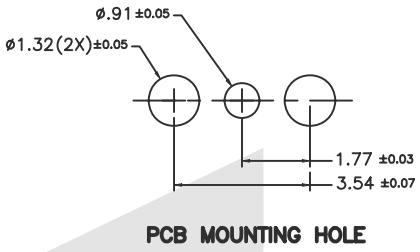

ORDER INFORMATION

Product NO.: KLS1-MMCX002

Pos. NO.
MMCX Connector Type

MMCX Connector Series

KLS1-MMCX003 MMCX Connector Series

Electrical Specifications
Impedance: 50 Ω
Frequency Range: DC - 6 GHz
VSWR: 1.15 max. @ DC - 4 GHz
1.40 max. @ 4 - 6 GHz
RF-Leakage: 60 dB minimum @ 1 GHz (flexible cable)
70 dB minimum @ 1 GHz (semi-rigid cable)
Voltage Rating (at sea level): 170 Vrms Max.
Contact Resistance: center contact: 10 mΩ Max.
outer contact: 5 mΩ Max.
Insulation Resistance: 1,000 MΩ Min.
Dielectric Withstanding Voltage: 500 Vrms (at sea level)



Mechanical
Mating: Snap-on coupling
Contact Captivation: 2.3 lbs
Engagement Force: 3.4 lbs (15N) Max.
Disengagement Force: 1.4 lbs (6N) Min.
Durability (matings): 500 cycles Min.
Temperature Range: -55°C to +155°C

Material
Body and Outer Contacts: Brass, nickel or gold plated
Male Contact: Brass, gold plated
Female Contact: Beryllium copper or phosphor bronze, gold plated
Crimp Ferrule: Copper or brass, nickel plated
Insulator: LCP, PTFE or PFA

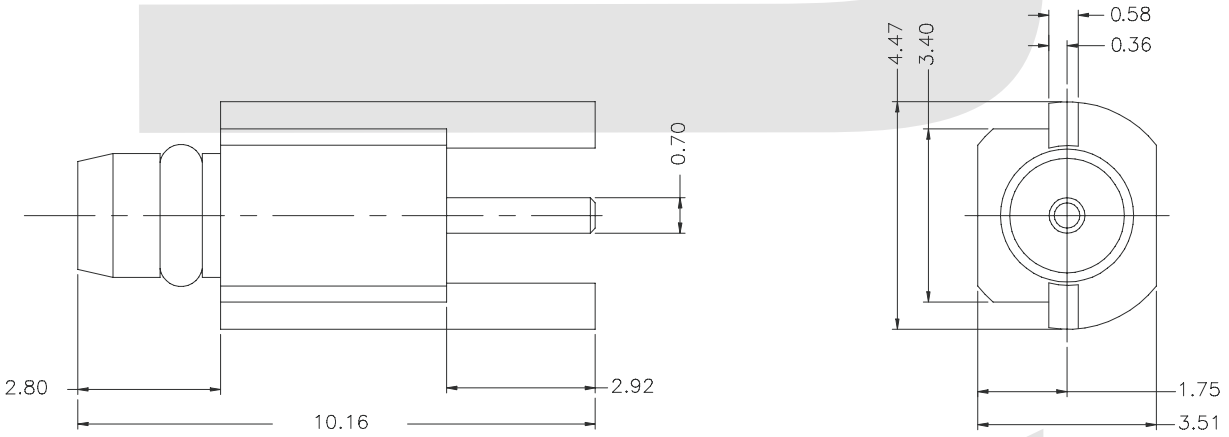

ORDER INFORMATION

Product NO.: KLS1-MMCX003
Pos. NO.
MMCX Connector Type

MMCX Connector Series

KLS1-MMCX004 MMCX Connector Series

Electrical Specifications
Impedance: 50 Ω
Frequency Range: DC - 6 GHz
VSWR: 1.15 max. @ DC - 4 GHz
1.40 max. @ 4 - 6 GHz
RF-Leakage: 60 dB minimum @ 1 GHz (flexible cable)
70 dB minimum @ 1 GHz (semi-rigid cable)
Voltage Rating (at sea level): 170 Vrms Max.
Contact Resistance: center contact: 10 mΩ Max.
outer contact: 5 mΩ Max.
Insulation Resistance: 1,000 MΩ Min.
Dielectric Withstanding Voltage: 500 Vrms (at sea level)



Mechanical
Mating: Snap-on coupling
Contact Captivation: 2.3 lbs
Engagement Force: 3.4 lbs (15N) Max.
Disengagement Force: 1.4 lbs (6N) Min.
Durability (matings): 500 cycles Min.
Temperature Range: -55°C to +155°C

Material
Body and Outer Contacts: Brass, nickel or gold plated
Male Contact: Brass, gold plated
Female Contact: Beryllium copper or phosphor bronze, gold plated
Crimp Ferrule: Copper or brass, nickel plated
Insulator: LCP, PTFE or PFA

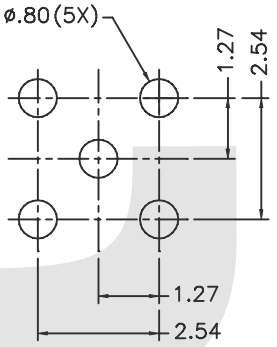

PCB MOUNTING HOLES

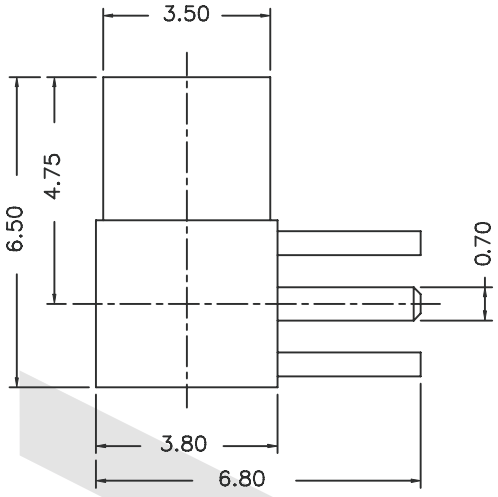

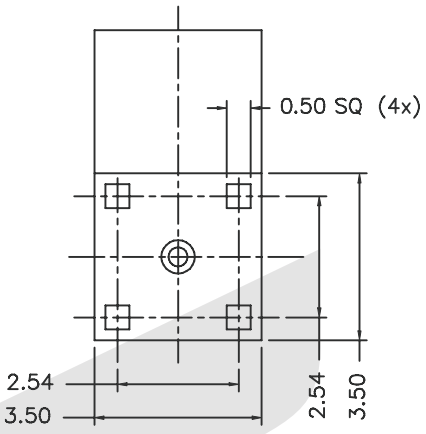

ORDER INFORMATION

Product NO.: KLS1-MMCX004

Pos. NO.
MMCX Connector Type

MMCX Connector Series

KLS1-MMCX005 MMCX Connector Series



Electrical Specifications
Impedance: 50 Ω
Frequency Range: DC - 6 GHz
VSWR: 1.15 max. @ DC - 4 GHz
1.40 max. @ 4 - 6 GHz
RF-Leakage: 60 dB minimum @ 1 GHz (flexible cable)
70 dB minimum @ 1 GHz (semi-rigid cable)
Voltage Rating (at sea level): 170 Vrms Max.
Contact Resistance: center contact: 10 mΩ Max.
outer contact: 5 mΩ Max.
Insulation Resistance: 1,000 MΩ Min.
Dielectric Withstanding Voltage: 500 Vrms (at sea level)

Mechanical
Mating: Snap-on coupling
Contact Captivation: 2.3 lbs
Engagement Force: 3.4 lbs (15N) Max.
Disengagement Force: 1.4 lbs (6N) Min.
Durability (matings): 500 cycles Min.
Temperature Range: -55°C to +155°C

Material
Body and Outer Contacts: Brass, nickel or gold plated
Male Contact: Brass, gold plated
Female Contact: Beryllium copper or phosphor bronze, gold plated
Crimp Ferrule: Copper or brass, nickel plated
Insulator: LCP, PTFE or PFA

Cable Group: RG-174, RG-188A, RG-316

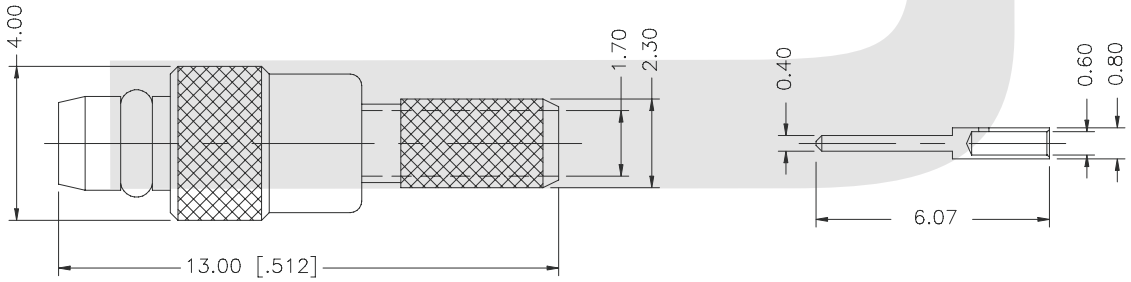

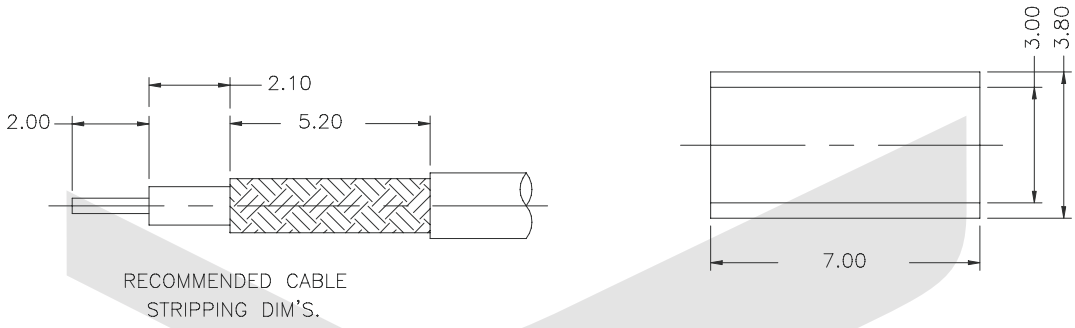

ORDER INFORMATION

Product NO.: KLS1-MMCX005
Pos. NO.
MMCX Connector Type

MMCX Connector Series

KLS1-MMCX006 MMCX Connector Series



Electrical Specifications
Impedance: 50 Ω
Frequency Range: DC - 6 GHz
VSWR: 1.15 max. @ DC - 4 GHz
1.40 max. @ 4 - 6 GHz
RF-Leakage: 60 dB minimum @ 1 GHz (flexible cable)
70 dB minimum @ 1 GHz (semi-rigid cable)
Voltage Rating (at sea level): 170 Vrms Max.
Contact Resistance: center contact: 10 mΩ Max.
outer contact: 5 mΩ Max.
Insulation Resistance: 1,000 MΩ Min.
Dielectric Withstanding Voltage: 500 Vrms (at sea level)

Mechanical
Mating: Snap-on coupling
Contact Captivation: 2.3 lbs
Engagement Force: 3.4 lbs (15N) Max.
Disengagement Force: 1.4 lbs (6N) Min.
Durability (matings): 500 cycles Min.
Temperature Range: -55°C to +155°C

Material
Body and Outer Contacts: Brass, nickel or gold plated
Male Contact: Brass, gold plated
Female Contact: Beryllium copper or phosphor bronze, gold plated
Crimp Ferrule: Copper or brass, nickel plated
Insulator: LCP, PTFE or PFA

Cable Group: RG-174, RG-188A, RG-316

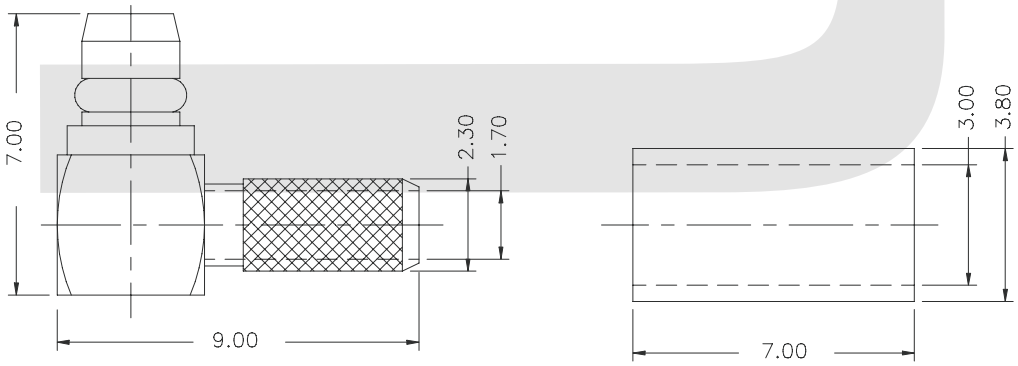

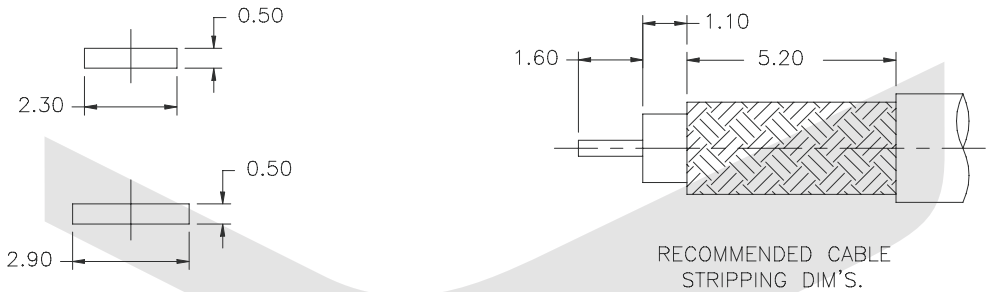

ORDER INFORMATION

Product NO.: KLS1-MMCX006
Pos. NO.
MMCX Connector Type

SMA Connectors

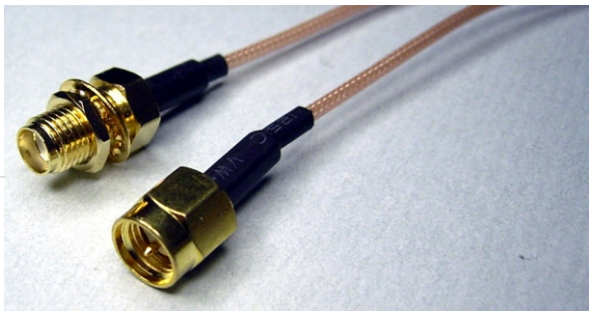

Features & Benefits:

- Broadband performance DC to 18 GHz with low reflection stainless steel construction and ¼-36 threaded coupling offers high performance in a compact design.
- Low cost Commercial Grade (Brass SMA) available in nickel or gold plating which provides approximately 30% cost reduction with 250 mating cycles.
- Available for .085" and .141" diameter semi-rigid cables and all the standard flexible cables including double shielded RG-316.
- Phase Adjustable SMA connectors provide ease of mechanical screw adjustments, compared to the delays and expense of laborious cable-trimming.

Applications:

- Base Stations
- Instrumentation
- Process Controls
- Cable Assemblies
- Mil/Aero
- Telecom
- Components
- PC/LAN

Family:

SMA Plugs | SMA Jacks | SMA Adapters



BNC Plugs

Features

The Micro USB gives portable device and mobile phone makers the ability to further reduce their real estate in their applications



BNC Jacks

Features

Molex's sealed, industrial Universal Serial Bus (USB) connectors are ideal for industrial and harsh commercialapplications, where a secure and robust connection isrequired. The rugged, plug and receptacle designs feature bayonet-style latches, encapsulated PCBreceptacles and overmolded cable assemblies to help keep out dust, debris and water.

SMA Connector Series

KLS1-SMA001 SMA Connector Series

Electrical Specifications
Impedance: 50 Ω
Frequency Range: Semi-rigid cable: 0-18 GHz
Flexible cables: 0-12.4 GHz
Voltage Rating : 335 volts rms.
Dielectric Withstanding Voltage : 500 volts rms.
VSWR : 1.15 +0 .02 f (GHz) for Straight connector typical
1.25 +0 .025 f (GHz) for Right angle connector typical
Contact Resistance: Center contact: 2.0 mΩ
Body: 2.0 mΩ
Insulation Resistance: 5,000 MΩ



Mechanical Specifications
Mating:1/4"-36 UNS thread coupling
Cable retention:6kgf typical
Durability:500Cycles Min.
Coupling nut retention:18kgf Min.
Temperature Range: - 55°C to +155°C

Material
Connector body: Brass per QQ-B-626 ,gold Plating or nickel
Center contact Male: Brass,gold Plating
Center contact Female: Beryllium copper,gold Plating
Insulator: PTFE
Gasket:Silicone rubber
Crimp Ferrule:Annealed copper

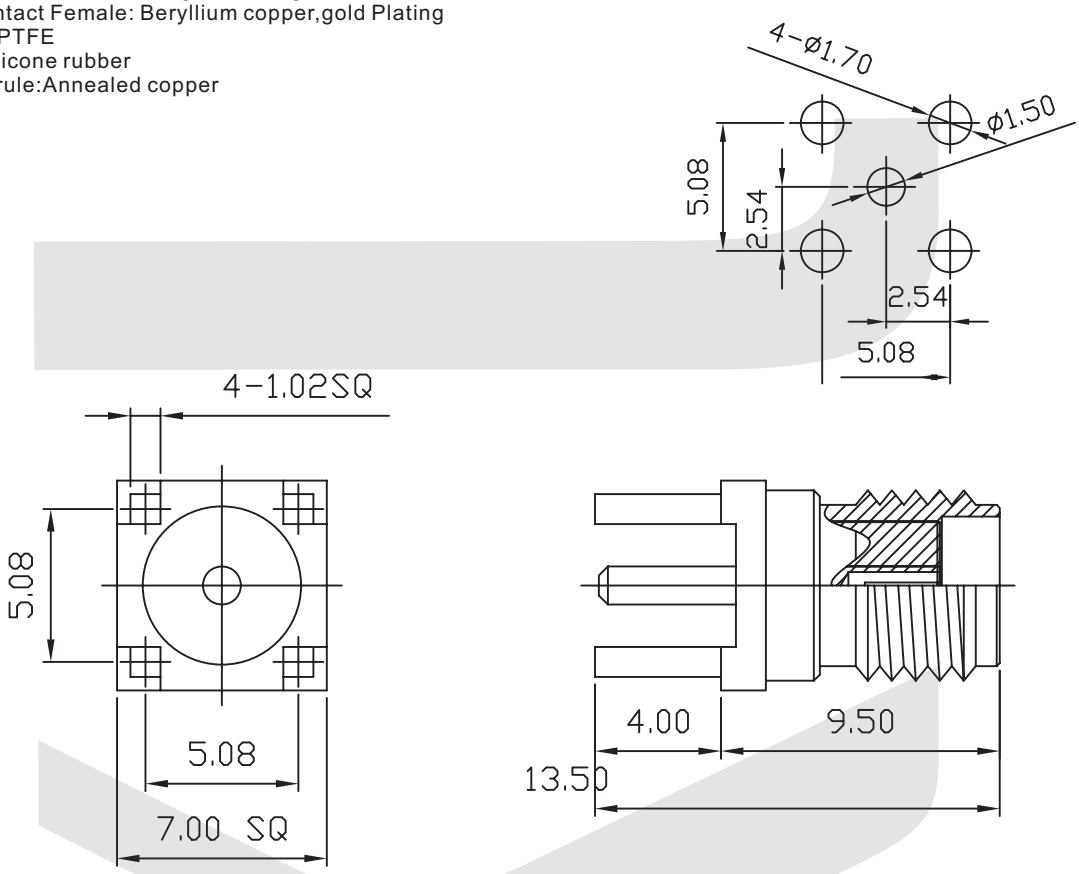

ORDER INFORMATION

Product NO.: KLS1-SMA001
Pos. NO.
SMA Connector Type

SMA Connector Series

KLS1-SMA001A SMA Connector Series



Electrical Specifications
Impedance: 50 Ω
Frequency Range: Semi-rigid cable: 0-18 GHz
Flexible cables: 0-12.4 GHz
Voltage Rating : 335 volts rms.
Dielectric Withstanding Voltage : 500 volts rms.
VSWR : 1.15 +0 .02 f (GHz) for Straight connector typical
1.25 +0 .025 f (GHz) for Right angle connector typical
Contact Resistance: Center contact: 2.0 mΩ
Body: 2.0 mΩ
Insulation Resistance: 5,000 MΩ

Mechanical Specifications
Mating:1/4"-36 UNS thread coupling
Cable retention:6kgf typical
Durability:500Cycles Min.
Coupling nut retention:18kgf Min.
Temperature Range: - 55°C to +155°C

Material
Connector body: Brass per QQ-B-626 ,gold Plating or nickel
Center contact Male: Brass,gold Plating
Center contact Female: Beryllium copper,gold Plating
Insulator: PTFE
Gasket:Silicone rubber
Crimp Ferrule:Annealed copper

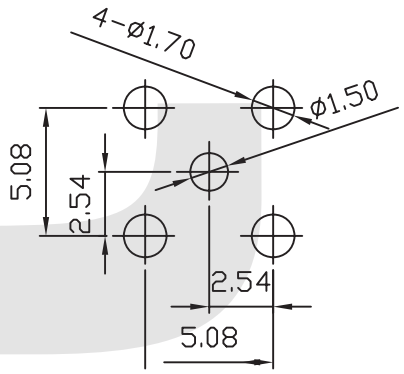

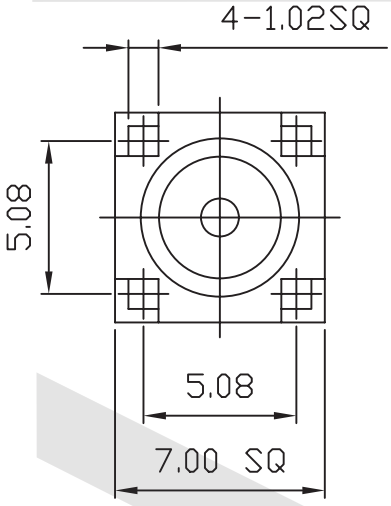

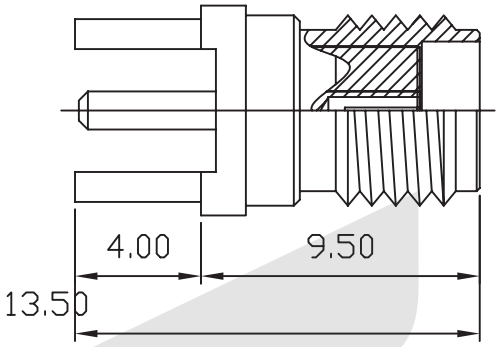

ORDER INFORMATION

Product NO.: KLS1-SMA001A
Pos. NO.
SMA Connector Type

SMA Connector Series

KLS1-SMA002 SMA Connector Series



Electrical Specifications

Impedance: 50 Ω
Frequency Range
Semi-rigid cable: 0-18 GHz
Flexible cables: 0-12.4 GHz
Voltage Rating : 335 volts rms.
Dielectric Withstanding Voltage : 500 volts rms.
VSWR :
1.15 +0 .02 f (GHz) for Straight connector typical
1.25 +0 .025 f (GHz) for Right angle connector typical
Contact Resistance
Center contact: 2.0 mΩ
Body: 2.0 mΩ
Insulation Resistance: 5,000 MΩ

Mechanical Specifications

Mating:1/4"-36 UNS thread coupling
Cable retention:6kgf typical
Durability:500Cycles Min.
Coupling nut retention:18kgf Min.
Temperature Range: - 55°C to +155°C

Material

Connector body: Brass per QQ-B-626 ,gold Plating or nickel
Center contact Male: Brass,gold Plating
Center contact Female: Beryllium copper,gold Plating
Insulator: PTFE
Gasket:Silicone rubber
Crimp Ferrule:Annealed copper

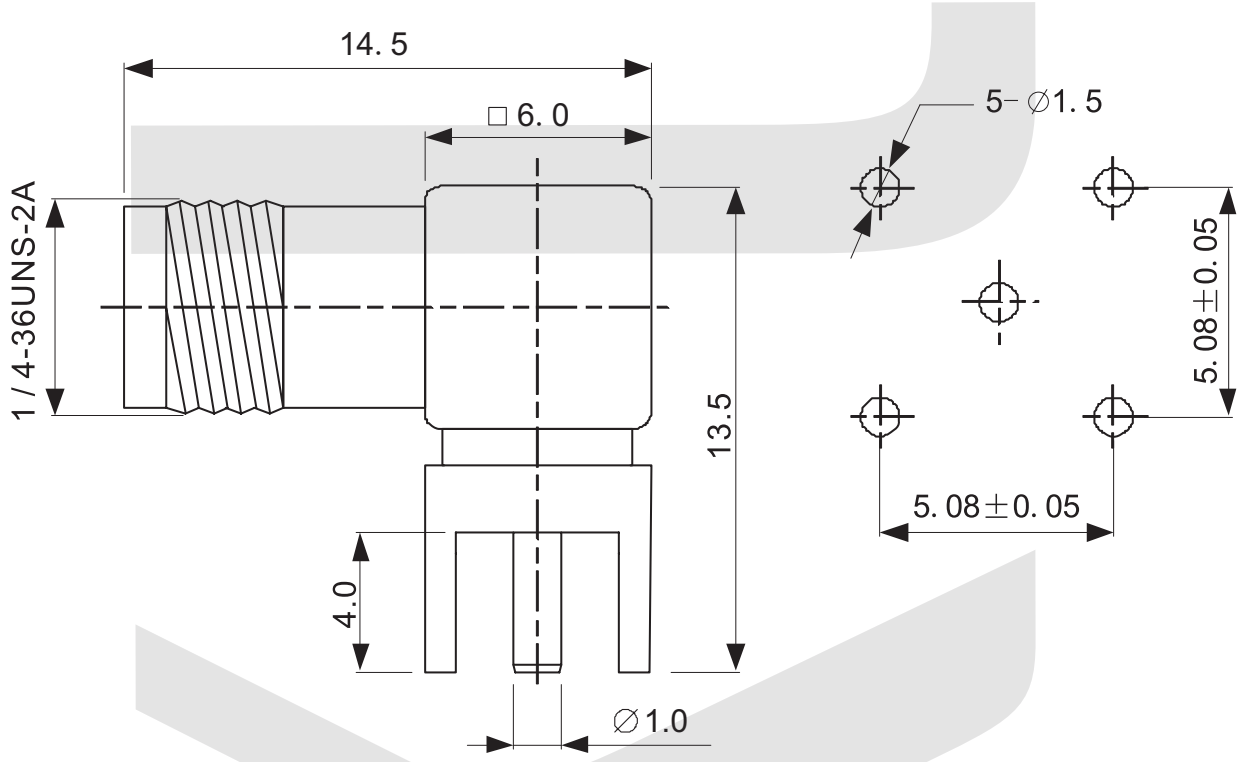

ORDER INFORMATION

Product NO.: KLS1-SMA002

Pos. NO.
SMA Connector Type

SMA Connector Series

KLS1-SMA002 SMA Connector Series

Electrical Specifications

Impedance: 50 Ω
Frequency Range
  Semi-rigid cable: 0-18 GHz
  Flexible cables: 0-12.4 GHz
Voltage Rating : 335 volts rms.
Dielectric Withstanding Voltage : 500 volts rms.
VSWR :
  1.15 +0 .02 f (GHz) for Straight connector typical
  1.25 +0 .025 f (GHz) for Right angle connector typical
Contact Resistance
  Center contact: 2.0 mΩ
  Body: 2.0 mΩ
Insulation Resistance: 5,000 MΩ



Mechanical Specifications

Mating:1/4"-36 UNS thread coupling
Cable retention:6kgf typical
Durability:500Cycles Min.
Coupling nut retention:18kgf Min.
Temperature Range: - 55°C to +155°C

Material

Connector body: Brass per QQ-B-626 ,gold Plating or nickel
Center contact Male: Brass,gold Plating
Center contact Female: Beryllium copper,gold Plating
Insulator: PTFE
Gasket:Silicone rubber
Crimp Ferrule:Annealed copper

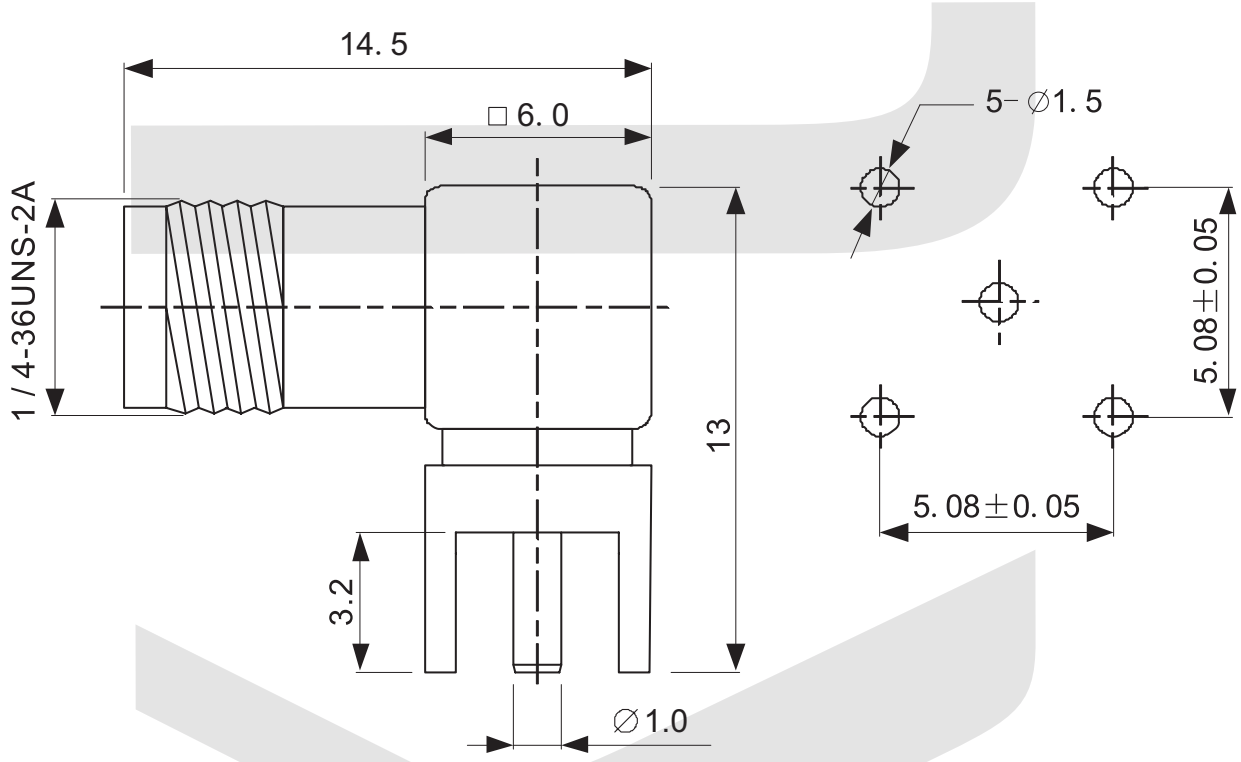

ORDER INFORMATION

Product NO.: KLS1-SMA002

Pos. NO.
SMA Connector Type

SMA Connector Series

KLS1-SMA003 SMA Connector Series

Electrical Specifications

Impedance: 50 Ω
Frequency Range
  Semi-rigid cable: 0-18 GHz
  Flexible cables: 0-12.4 GHz
Voltage Rating : 335 volts rms.
Dielectric Withstanding Voltage : 500 volts rms.
VSWR :
  1.15 +0 .02 f (GHz) for Straight connector typical
  1.25 +0 .025 f (GHz) for Right angle connector typical
Contact Resistance
  Center contact: 2.0 mΩ
  Body: 2.0 mΩ
Insulation Resistance: 5,000 MΩ



Mechanical Specifications

Mating:1/4"-36 UNS thread coupling
Cable retention:6kgf typical
Durability:500Cycles Min.
Coupling nut retention:18kgf Min.
Temperature Range: - 55°C to +155°C

Material

Connector body: Brass per QQ-B-626 ,gold Plating or nickel
Center contact Male: Brass,gold Plating
Center contact Female: Beryllium copper,gold Plating
Insulator: PTFE
Gasket:Silicone rubber
Crimp Ferrule:Annealed copper

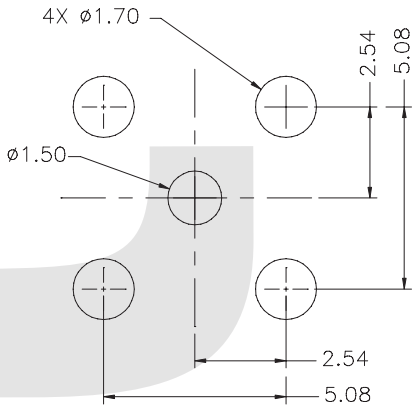

PCB MOUNTING HOLES

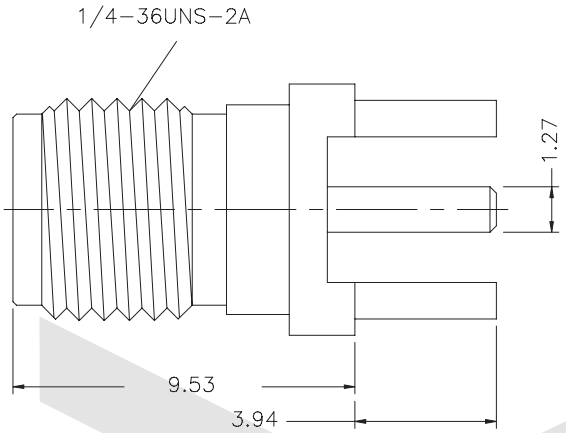

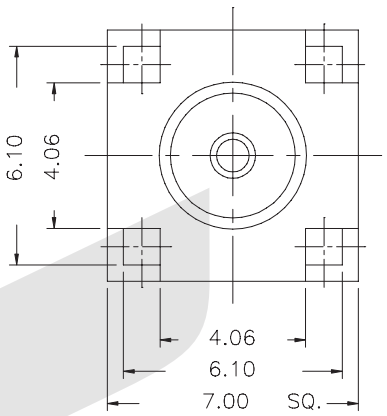

ORDER INFORMATION

Product NO.: KLS1-SMA003

Pos. NO.
SMA Connector Type

SMA Connector Series

KLS1-SMA004 SMA Connector Series



Electrical Specifications

Impedance: 50 Ω
Frequency Range
Semi-rigid cable: 0-18 GHz
Flexible cables: 0-12.4 GHz
Voltage Rating : 335 volts rms.
Dielectric Withstanding Voltage : 500 volts rms.
VSWR :
1.15 +0 .02 f (GHz) for Straight connector typical
1.25 +0 .025 f (GHz) for Right angle connector typical
Contact Resistance: Center contact: 2.0 mΩ
Body: 2.0 mΩ
Insulation Resistance: 5,000 MΩ

Mechanical Specifications

Mating:1/4"-36 UNS thread coupling
Cable retention:6kgf typical
Durability:500Cycles Min.
Coupling nut retention:18kgf Min.
Temperature Range: - 55°C to +155°C

Material

Connector body: Brass per QQ-B-626 ,gold Plating or nickel
Center contact Male: Brass,gold Plating
Center contact Female: Beryllium copper,gold Plating
Insulator: PTFE
Gasket:Silicone rubber
Crimp Ferrule:Annealed copper

Cable Group: RG-405

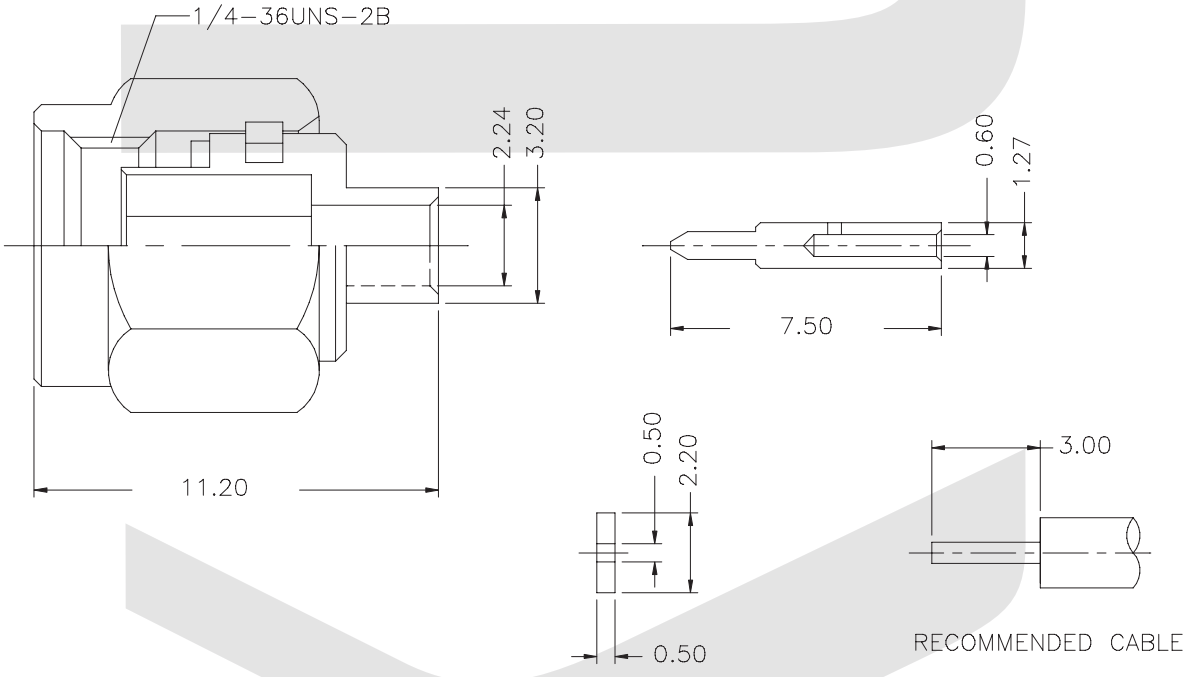

ORDER INFORMATION

Product NO.: KLS1-SMA004

Pos. NO.
SMA Connector Type

SMA Connector Series

KLS1-SMA005 SMA Connector Series

Electrical Specifications

Impedance: 50 Ω
Frequency Range
Semi-rigid cable: 0-18 GHz
Flexible cables: 0-12.4 GHz
Voltage Rating : 335 volts rms.
Dielectric Withstanding Voltage : 500 volts rms.
VSWR :
1.15 +0 .02 f (GHz) for Straight connector typical
1.25 +0 .025 f (GHz) for Right angle connector typical
Contact Resistance: Center contact: 2.0 mΩ
Body: 2.0 mΩ
Insulation Resistance: 5,000 MΩ



Mechanical Specifications

Mating:1/4"-36 UNS thread coupling
Cable retention:6kgf typical
Durability:500Cycles Min.
Coupling nut retention:18kgf Min.
Temperature Range: - 55°C to +155°C

Material

Connector body: Brass per QQ-B-626 ,gold Plating or nickel
Center contact Male: Brass,gold Plating
Center contact Female: Beryllium copper,gold Plating
Insulator: PTFE
Gasket:Silicone rubber
Crimp Ferrule:Annealed copper

Cable Group: RG-316,174,188;Q1,D316

RECOMMENDED
CABLE STRIPPING DIM'S

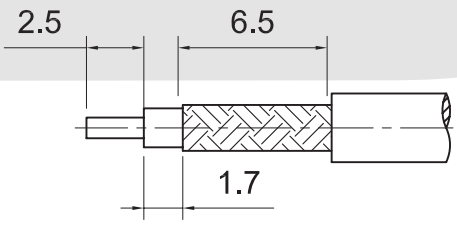

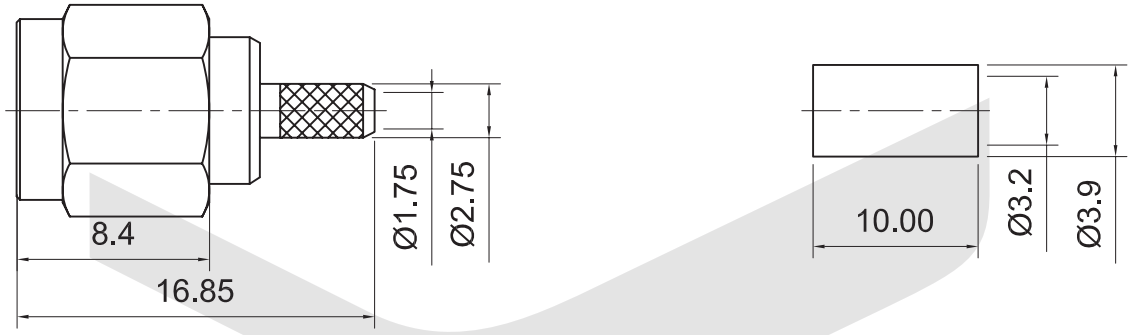

ORDER INFORMATION

Product NO.: KLS1-SMA005
Pos. NO.
SMA Connector Type

SMA Connectors Series

KLS1-SMA006



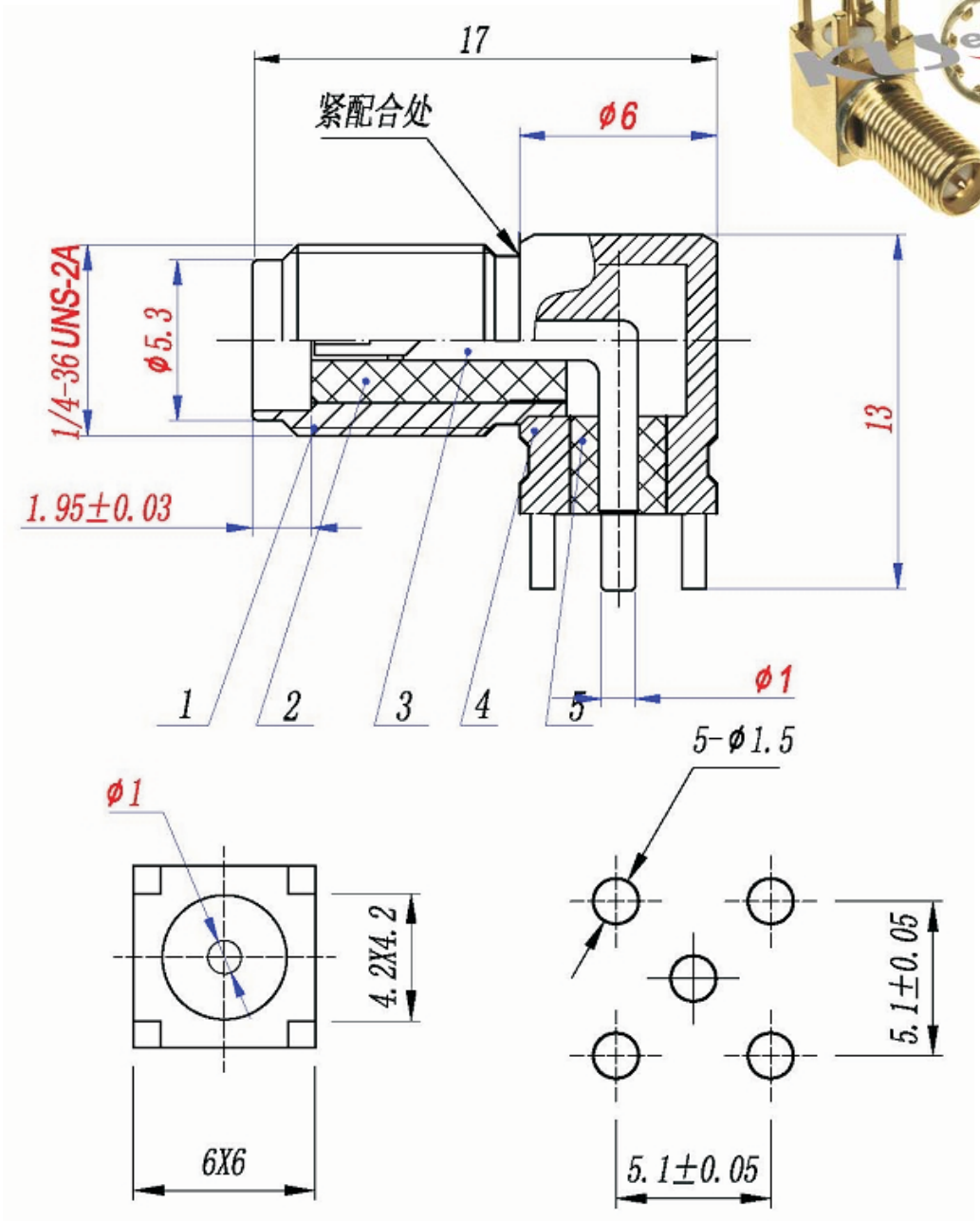

ORDER INFORMATION

Product No. : KLS1-SMA006

Pos. NO.
Part NO.

SMA Connector Series

KLS1-SMA007 SMA Connector Series



Electrical Specifications

Impedance: 50 Ω
Frequency Range
Semi-rigid cable: 0-18 GHz
Flexible cables: 0-12.4 GHz
Voltage Rating : 335 volts rms.
Dielectric Withstanding Voltage : 500 volts rms.
VSWR :
1.15 +0 .02 f (GHz) for Straight connector typical
1.25 +0 .025 f (GHz) for Right angle connector typical
Contact Resistance: Center contact: 2.0 mΩ
Body: 2.0 mΩ
Insulation Resistance: 5,000 MΩ

Mechanical Specifications

Mating:1/4"-36 UNS thread coupling
Cable retention:6kgf typical
Durability:500Cycles Min.
Coupling nut retention:18kgf Min.
Temperature Range: - 55°C to +155°C

Material

Connector body: Brass per QQ-B-626 ,gold Plating or nickel
Center contact Male: Brass,gold Plating
Center contact Female: Beryllium copper,gold Plating
Insulator: PTFE
Gasket:Silicone rubber
Crimp Ferrule:Annealed copper

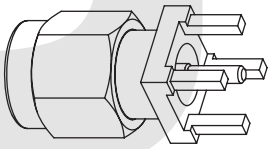

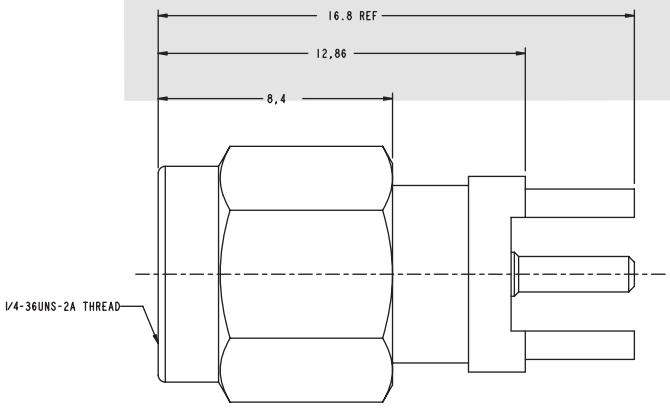

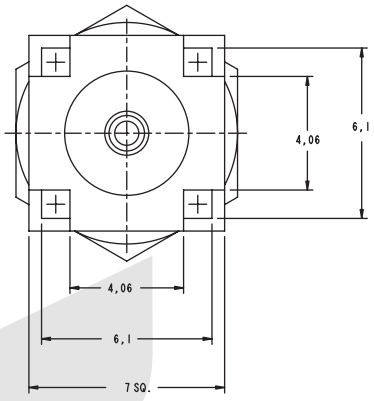

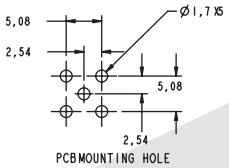

ORDER INFORMATION

Product NO.: KLS1-SMA007

Pos. NO.
SMA Connector Type

SMA Connectors Series

KLS1-SMA008



ORDER INFORMATION

Product No. : KLS1-SMA008

Pos. NO.
Part NO.

All specification & dimensions are subject to change, Please call your nearest KLS sales represesntative for update information

SMA Connectors Series

KLS1-SMA009



ORDER INFORMATION

Product No. : KLS1-SMA009

Pos. NO.
Part NO.

All specification & dimensions are subject to change, Please call your nearest KLS sales represesntative for update information

SMA Connectors Series

KLS1-SMA010



ORDER INFORMATION

Product No. : KLS1-SMA010

Pos. NO.
Part NO.

All specification & dimensions are subject to change, Please call your nearest KLS sales represesntative for update information

SMA Connector Series

KLS1-SMA011 SMA Connector Series



Electrical Specifications

Impedance: 50 Ω
Frequency Range
Semi-rigid cable: 0-18 GHz
Flexible cables: 0-12.4 GHz
Voltage Rating : 335 volts rms.
Dielectric Withstanding Voltage : 500 volts rms.
VSWR :
1.15 +0 .02 f (GHz) for Straight connector typical
1.25 +0 .025 f (GHz) for Right angle connector typical
Contact Resistance: Center contact: 2.0 mΩ
Body: 2.0 mΩ
Insulation Resistance: 5,000 MΩ

Mechanical Specifications

Mating:1/4"-36 UNS thread coupling
Cable retention:6kgf typical
Durability:500Cycles Min.
Coupling nut retention:18kgf Min.
Temperature Range: - 55°C to +155°C

Material

Connector body: Brass per QQ-B-626 ,gold Plating or nickel
Center contact Male: Brass,gold Plating
Center contact Female: Beryllium copper,gold Plating
Insulator: PTFE
Gasket:Silicone rubber
Crimp Ferrule:Annealed copper

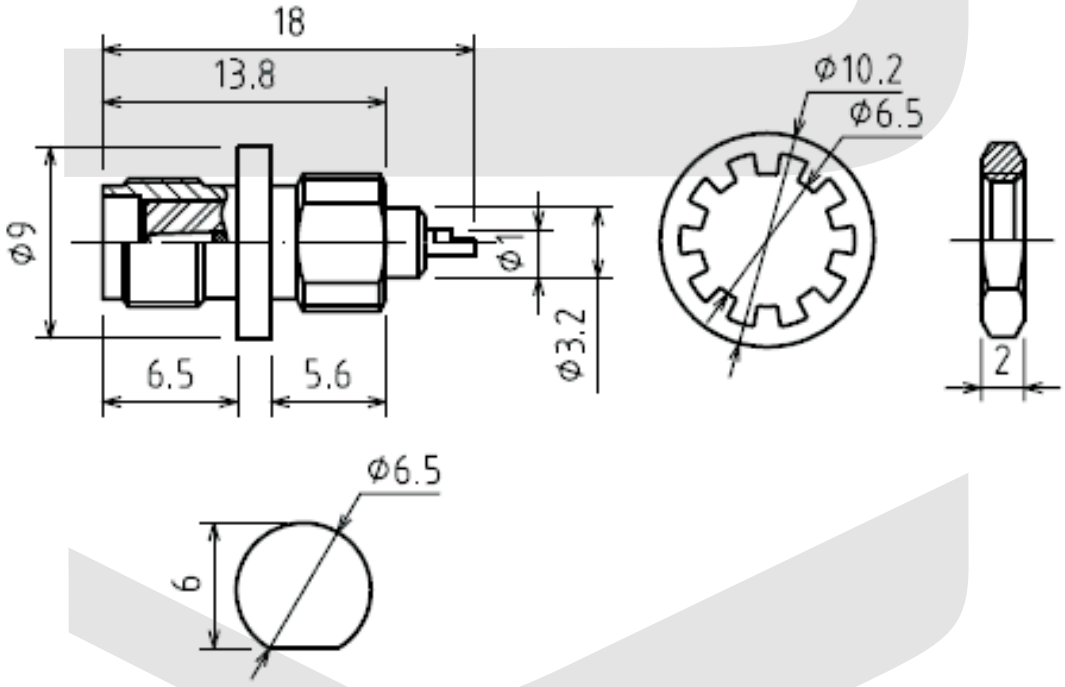

ORDER INFORMATION

Product NO.: KLS1-SMA011

Pos. NO.

SMA Connector Type

SMA Connector Series

KLS1-SMA012 SMA Connector Series



Electrical Specifications

Impedance: 50 Ω
Frequency Range
Semi-rigid cable: 0-18 GHz
Flexible cables: 0-12.4 GHz
Voltage Rating : 335 volts rms.
Dielectric Withstanding Voltage : 500 volts rms.
VSWR :
1.15 +0 .02 f (GHz) for Straight connector typical
1.25 +0 .025 f (GHz) for Right angle connector typical
Contact Resistance: Center contact: 2.0 mΩ
Body: 2.0 mΩ
Insulation Resistance: 5,000 MΩ

Mechanical Specifications

Mating:1/4"-36 UNS thread coupling
Cable retention:6kgf typical
Durability:500Cycles Min.
Coupling nut retention:18kgf Min.
Temperature Range: - 55°C to +155°C

Material

Connector body: Brass per QQ-B-626 ,gold Plating or nickel
Center contact Male: Brass,gold Plating
Center contact Female: Beryllium copper,gold Plating
Insulator: PTFE
Gasket:Silicone rubber
Crimp Ferrule:Annealed copper

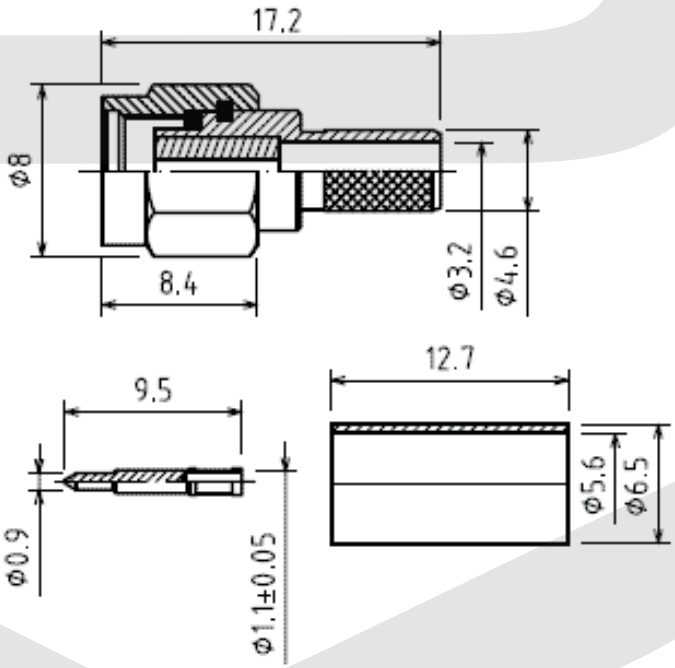

ORDER INFORMATION

Product NO.: KLS1-SMA012

Pos. NO.
SMA Connector Type

SMA Connectors Series

KLS1-SMA014

Electrical Specifications

Impedance: 50 Ω
Frequency Range
Semi-rigid cable: 0-18 GHz
Flexible cables: 0-12.4 GHz
Voltage Rating : 335 volts rms.
Dielectric Withstanding Voltage : 500 volts rms.
VSWR :
1.15 +0 .02 f (GHz) for Straight connector typical
1.25 +0 .025 f (GHz) for Right angle connector typical
Contact Resistance
Center contact: 2.0 mΩ
Body: 2.0 mΩ
Insulation Resistance: 5,000 MΩ

Mechanical Specifications

Mating:1/4"-36 UNS thread coupling
Cable retention:6kgf typical
Durability:500Cycles Min.
Coupling nut retention:18kgf Min.
Temperature Range: - 55°C to +155°C

Material

Connector body: Brass per QQ-B-626 ,gold Plating or nickel
Center contact Male: Brass,gold Plating
Center contact Female: Beryllium copper,gold Plating
Insulator: PTFE
Gasket:Silicone rubber
Crimp Ferrule:Annealed copper



Cable Type:RG-316,174,188;Q1,D316

ORDER INFORMATION

Product No. : KLS1-SMA014

Pos. NO.
Part NO.

SMA Connector Series

KLS1-SMA015 SMA Connector Series

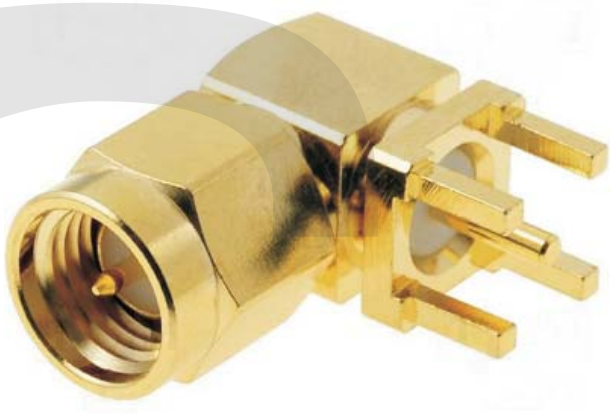

Electrical Specifications

Impedance: 50 Ω
Frequency Range
Semi-rigid cable: 0-18 GHz
Flexible cables: 0-12.4 GHz
Voltage Rating : 335 volts rms.
Dielectric Withstanding Voltage : 500 volts rms.
VSWR :
1.15 +0 .02 f (GHz) for Straight connector typical
1.25 +0 .025 f (GHz) for Right angle connector typical
Contact Resistance: Center contact: 2.0 mΩ
Body: 2.0 mΩ
Insulation Resistance: 5,000 MΩ

Mechanical Specifications

Mating:1/4"-36 UNS thread coupling
Cable retention:6kgf typical
Durability:500Cycles Min.
Coupling nut retention:18kgf Min.
Temperature Range: - 55°C to +155°C

Material

Connector body: Brass per QQ-B-626 ,gold Plating or nickel
Center contact Male: Brass,gold Plating
Center contact Female: Beryllium copper,gold Plating
Insulator: PTFE
Gasket:Silicone rubber
Crimp Ferrule:Annealed copper

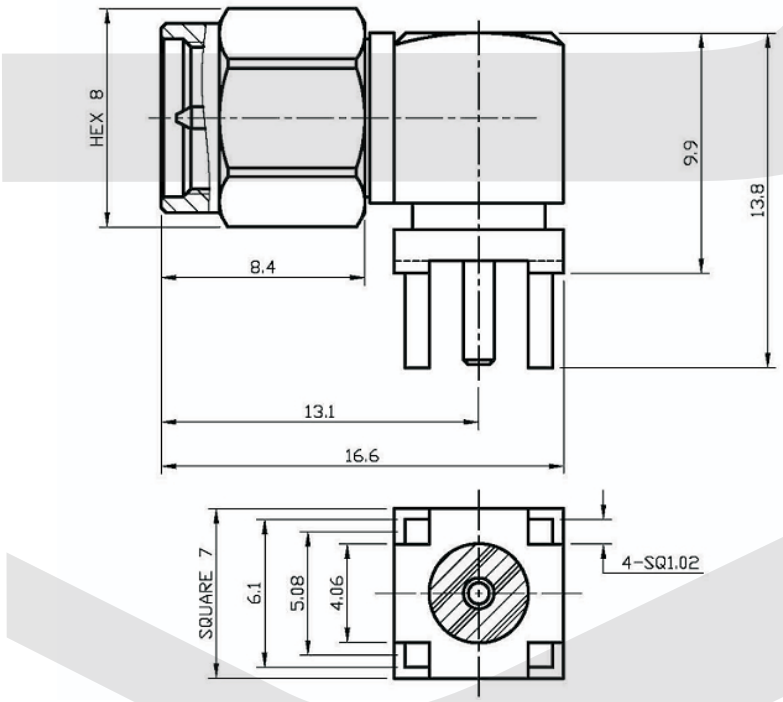

ORDER INFORMATION

Product NO.: KLS1-SMA015

Pos. NO.
SMA Connector Type

SMA Connector Series

KLS1-SMA016 SMA Connector Series



Electrical Specifications

Impedance: 50 Ω
Frequency Range
Semi-rigid cable: 0-18 GHz
Flexible cables: 0-12.4 GHz
Voltage Rating : 335 volts rms.
Dielectric Withstanding Voltage : 500 volts rms.
VSWR :
1.15 +0 .02 f (GHz) for Straight connector typical
1.25 +0 .025 f (GHz) for Right angle connector typical
Contact Resistance: Center contact: 2.0 mΩ
Body: 2.0 mΩ
Insulation Resistance: 5,000 MΩ

Mechanical Specifications

Mating:1/4"-36 UNS thread coupling
Cable retention:6kgf typical
Durability:500Cycles Min.
Coupling nut retention:18kgf Min.
Temperature Range: - 55°C to +155°C

Material

Connector body: Brass per QQ-B-626 ,gold Plating or nickel
Center contact Male: Brass,gold Plating
Center contact Female: Beryllium copper,gold Plating
Insulator: PTFE
Gasket:Silicone rubber
Crimp Ferrule:Annealed copper

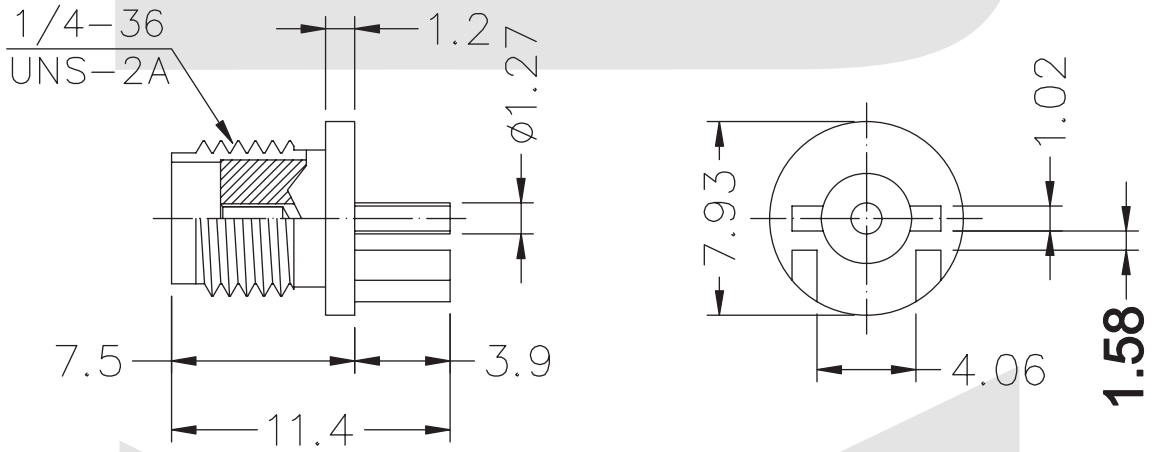

ORDER INFORMATION

Product NO.: KLS1-SMA016

Pos. NO.
SMA Connector Type

SMA Connector Series

KLS1-SMA017 SMA Connector Series

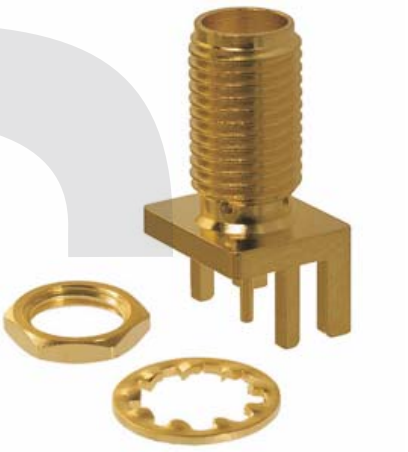

Electrical Specifications

Impedance: 50 Ω
Frequency Range
Semi-rigid cable: 0-18 GHz
Flexible cables: 0-12.4 GHz
Voltage Rating : 335 volts rms.
Dielectric Withstanding Voltage : 500 volts rms.
VSWR :
1.15 +0 .02 f (GHz) for Straight connector typical
1.25 +0 .025 f (GHz) for Right angle connector typical
Contact Resistance: Center contact: 2.0 mΩ
Body: 2.0 mΩ
Insulation Resistance: 5,000 MΩ

Mechanical Specifications

Mating:1/4"-36 UNS thread coupling
Cable retention:6kgf typical
Durability:500Cycles Min.
Coupling nut retention:18kgf Min.
Temperature Range: - 55°C to +155°C

Material

Connector body: Brass per QQ-B-626 ,gold Plating or nickel
Center contact Male: Brass,gold Plating
Center contact Female: Beryllium copper,gold Plating
Insulator: PTFE
Gasket:Silicone rubber
Crimp Ferrule:Annealed copper

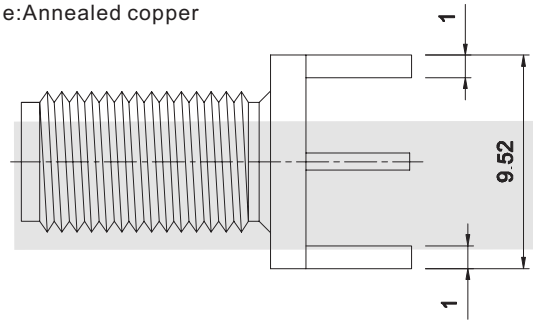

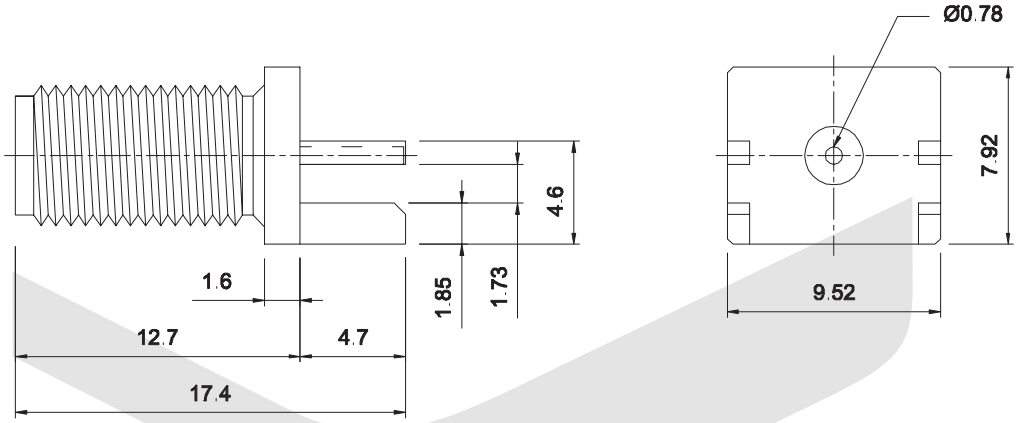

ORDER INFORMATION

Product NO.: KLS1-SMA017

Pos. NO.
SMA Connector Type

SMB Connector Series

KLS1-SMB001 SMB Connector Series

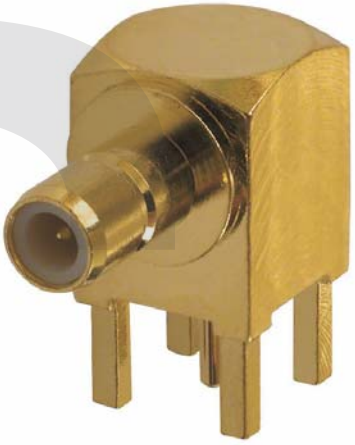

Electrical Specifications
Impedance: 50 Ω
Frequency Range: 0-4 GHz with low reflection; usable to 10.0 GHz
Voltage Rating for RG-188/U Cable:
335 volts at sea level and 85 volts at 70,000 feet
Dielectric Withstanding Voltage: RG-196: 750 VRMS;
RG-188: 1,000 VRMS
VSWR: Straight connector, RG-196/U: 1.30±0 .04 f (GHz)
Right angle connector, RG-196/U: 1.45±0 .06 f (GHz)
Straight connector, RG-188/U: 1.25±0 .04 f (GHz)
Right angle connector, RG-188/U: 1.35±0 .04 f (GHz)
Contact Resistance:
Center contact: 6.0 mΩ initial, 8.0 after environmental;
Outer contact: 1.0 mΩ initial, 1.5 after environmental
Braid to body: 1.0 mΩ initial, after environmental N/A
Insulation Resistance: 1,000 MΩ Min.
Insertion Loss: Straight connector: 0.30 dB @ 1.5 GHz
Right angle connector: 0.60 dB @ 1.5 GHz
RF Leakage: -55 dB Min. @ 2-3 GHz

Mechanical
Mating:Snap-on coupling per MIL-STD-348
Braid/Jacket Cable Affixment:Hex crimp
Center Conductor Cable Affixment:Solder
Engagement Forces: Engagement: 14 lbs maximum
Disengagement: 2 lbs minimum
Durability: 500 cycles Min.
Temperature Range:- 65°C to +165°C

Material
Center Contact:
Female: beryllium copper, gold-plated
Male: brass or beryllium copper, gold-plated
Outer Contact Plating: Nickel or gold plating
Body:Brass or zinc
Body Plating: Nickel or gold plating
Insulator: TFE
Crimp Ferrule:Annealed copper alloy

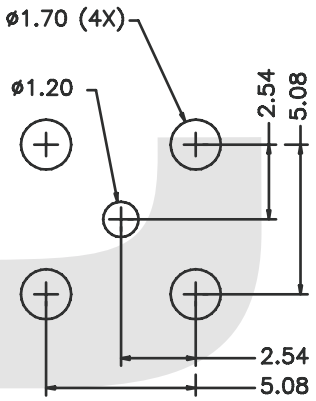

PCB MOUNTING HOLES

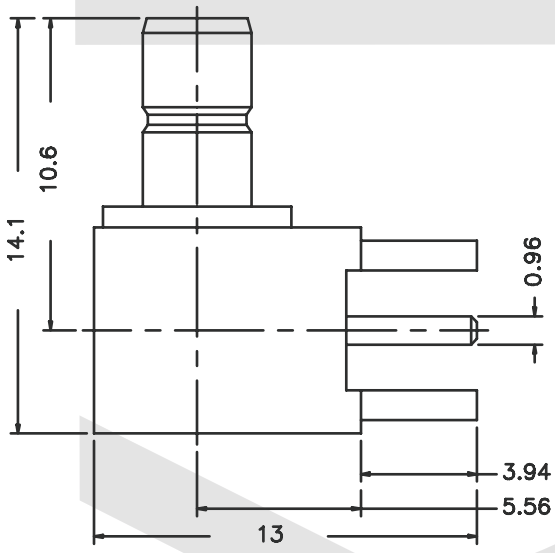

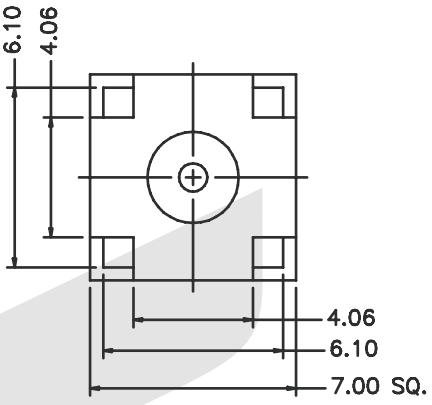

ORDER INFORMATION

Product NO.: KLS1-SMB001

Pos. NO.

SMB Connector Type

SMB Connector Series

KLS1-SMB002 SMB Connector Series



Electrical Specifications
Impedance: 50 Ω
Frequency Range: 0-4 GHz with low reflection; usable to 10.0 GHz
Voltage Rating for RG-188/U Cable:
335 volts at sea level and 85 volts at 70,000 feet
Dielectric Withstanding Voltage: RG-196: 750 VRMS;
RG-188: 1,000 VRMS
VSWR: Straight connector, RG-196/U: 1.30±0 .04 f (GHz)
Right angle connector, RG-196/U: 1.45±0 .06 f (GHz)
Straight connector, RG-188/U: 1.25±0 .04 f (GHz)
Right angle connector, RG-188/U: 1.35±0 .04 f (GHz)
Contact Resistance:
Center contact: 6.0 mΩ initial, 8.0 after environmental;
Outer contact: 1.0 mΩ initial, 1.5 after environmental
Braid to body: 1.0 mΩ initial, after environmental N/A
Insulation Resistance: 1,000 MΩ Min.
Insertion Loss: Straight connector: 0.30 dB @ 1.5 GHz
Right angle connector: 0.60 dB @ 1.5 GHz
RF Leakage: -55 dB Min. @ 2-3 GHz

Mechanical
Mating:Snap-on coupling per MIL-STD-348
Braid/Jacket Cable Affixment:Hex crimp
Center Conductor Cable Affixment:Solder
Engagement Forces: Engagement: 14 lbs maximum
Disengagement: 2 lbs minimum
Durability: 500 cycles Min.
Temperature Range:- 65°C to +165°C

Material
Center Contact:
Female: beryllium copper, gold-plated
Male: brass or beryllium copper, gold-plated
Outer Contact Plating: Nickel or gold plating
Body:Brass or zinc
Body Plating: Nickel or gold plating
Insulator: TFE
Crimp Ferrule:Annealed copper alloy

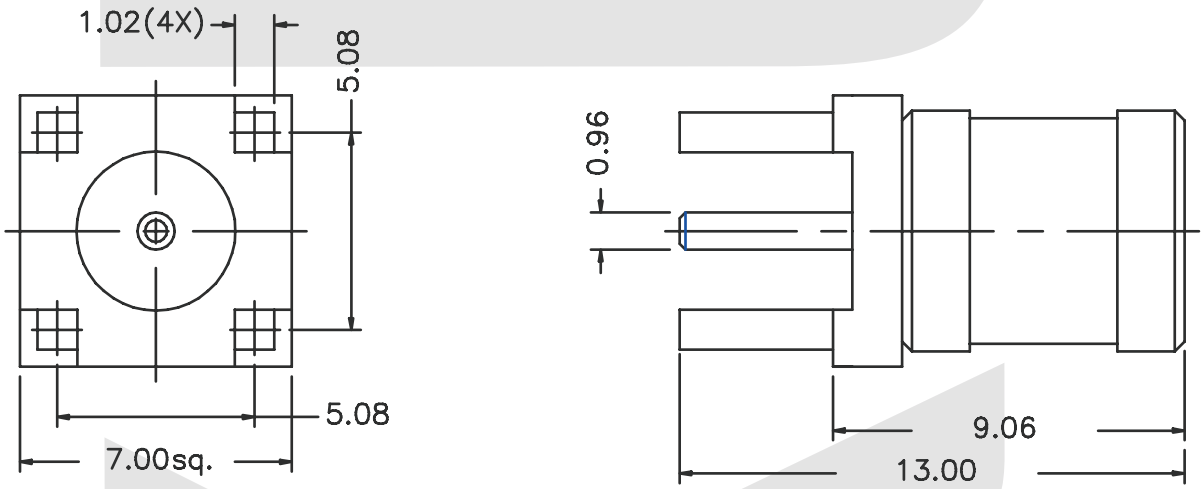

ORDER INFORMATION

Product NO.: KLS1-SMB002
Pos. NO.
SMB Connector Type

SMB Connector Series

KLS1-SMB003 SMB Connector Series

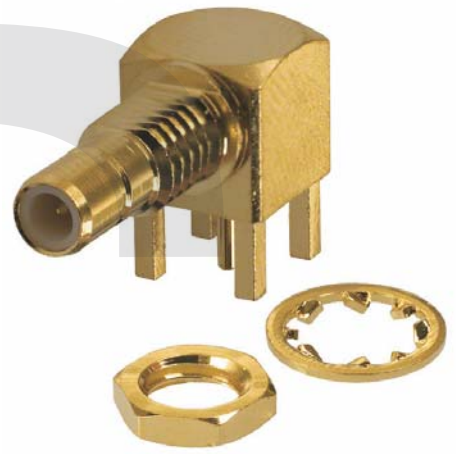

Electrical Specifications
Impedance: 50 Ω
Frequency Range: 0-4 GHz with low reflection; usable to 10.0 GHz
Voltage Rating for RG-188/U Cable:
335 volts at sea level and 85 volts at 70,000 feet
Dielectric Withstanding Voltage: RG-196: 750 VRMS;
RG-188: 1,000 VRMS
VSWR: Straight connector, RG-196/U: 1.30±0 .04 f (GHz)
Right angle connector, RG-196/U: 1.45±0 .06 f (GHz)
Straight connector, RG-188/U: 1.25±0 .04 f (GHz)
Right angle connector, RG-188/U: 1.35±0 .04 f (GHz)
Contact Resistance:
Center contact: 6.0 mΩ initial, 8.0 after environmental;
Outer contact: 1.0 mΩ initial, 1.5 after environmental
Braid to body: 1.0 mΩ initial, after environmental N/A
Insulation Resistance: 1,000 MΩ Min.
Insertion Loss: Straight connector: 0.30 dB @ 1.5 GHz
Right angle connector: 0.60 dB @ 1.5 GHz
RF Leakage: -55 dB Min. @ 2-3 GHz

Mechanical
Mating:Snap-on coupling per MIL-STD-348
Braid/Jacket Cable Affixment:Hex crimp
Center Conductor Cable Affixment:Solder
Engagement Forces: Engagement: 14 lbs maximum
Disengagement: 2 lbs minimum
Durability: 500 cycles Min.
Temperature Range:- 65°C to +165°C

Material
Center Contact:
Female: beryllium copper, gold-plated
Male: brass or beryllium copper, gold-plated
Outer Contact Plating: Nickel or gold plating
Body:Brass or zinc
Body Plating: Nickel or gold plating
Insulator: TFE
Crimp Ferrule:Annealed copper alloy

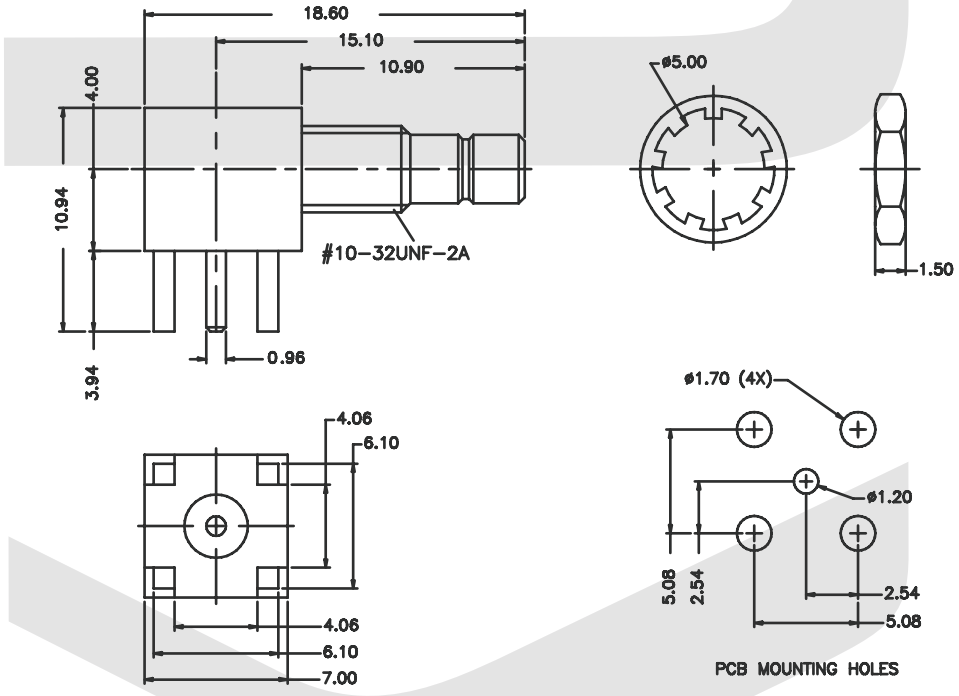

ORDER INFORMATION

Product NO.: KLS1-SMB003

Pos. NO.

SMB Connector Type

SMB Connector Series

KLS1-SMB004 SMB Connector Series

Electrical Specifications
Impedance: 50 Ω
Frequency Range: 0-4 GHz with low reflection; usable to 10.0 GHz
Voltage Rating for RG-188/U Cable:
335 volts at sea level and 85 volts at 70,000 feet
Dielectric Withstanding Voltage: RG-196: 750 VRMS;
RG-188: 1,000 VRMS
VSWR: Straight connector, RG-196/U: 1.30±0 .04 f (GHz)
Right angle connector, RG-196/U: 1.45±0 .06 f (GHz)
Straight connector, RG-188/U: 1.25±0 .04 f (GHz)
Right angle connector, RG-188/U: 1.35±0 .04 f (GHz)
Contact Resistance:
Center contact: 6.0 mΩ initial, 8.0 after environmental;
Outer contact: 1.0 mΩ initial, 1.5 after environmental
Braid to body: 1.0 mΩ initial, after environmental N/A
Insulation Resistance: 1,000 MΩ Min.
Insertion Loss: Straight connector: 0.30 dB @ 1.5 GHz
Right angle connector: 0.60 dB @ 1.5 GHz
RF Leakage: -55 dB Min. @ 2-3 GHz

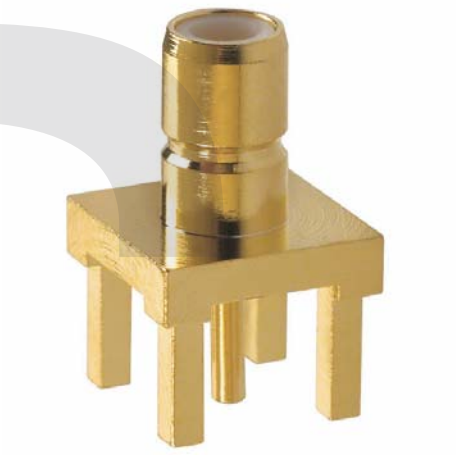

Mechanical
Mating:Snap-on coupling per MIL-STD-348
Braid/Jacket Cable Affixment:Hex crimp
Center Conductor Cable Affixment:Solder
Engagement Forces: Engagement: 14 lbs maximum
Disengagement: 2 lbs minimum
Durability: 500 cycles Min.
Temperature Range:- 65°C to +165°C

Material
Center Contact:
Female: beryllium copper, gold-plated
Male: brass or beryllium copper, gold-plated
Outer Contact Plating: Nickel or gold plating
Body:Brass or zinc
Body Plating: Nickel or gold plating
Insulator: TFE
Crimp Ferrule:Annealed copper alloy

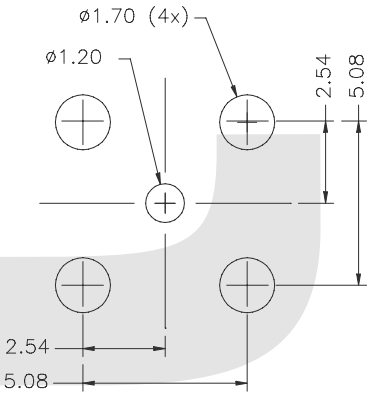

PCB MOUNTING HOLE

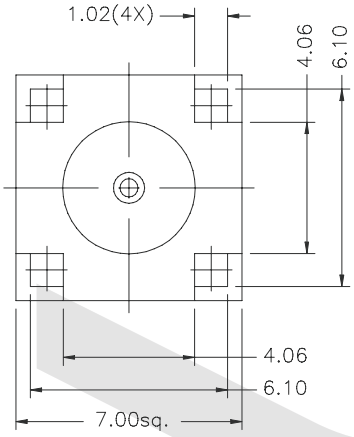

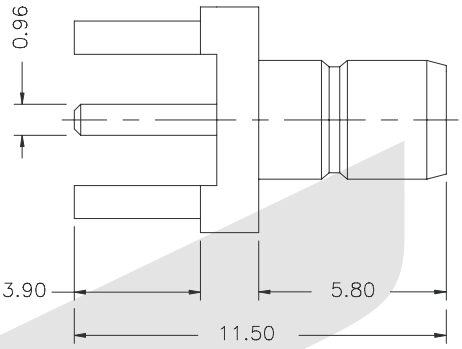

ORDER INFORMATION

Product NO.: KLS1-SMB004

Pos. NO.

SMB Connector Type

SMB Connector Series

KLS1-SMB005 SMB Connector Series

Electrical Specifications
Impedance: 50 Ω
Frequency Range: 0-4 GHz with low reflection; usable to 10.0 GHz
Voltage Rating for RG-188/U Cable:
335 volts at sea level and 85 volts at 70,000 feet
Dielectric Withstanding Voltage: RG-196: 750 VRMS;
RG-188: 1,000 VRMS
VSWR: Straight connector, RG-196/U: 1.30±0 .04 f (GHz)
Right angle connector, RG-196/U: 1.45±0 .06 f (GHz)
Straight connector, RG-188/U: 1.25±0 .04 f (GHz)
Right angle connector, RG-188/U: 1.35±0 .04 f (GHz)
Contact Resistance:
Center contact: 6.0 mΩ initial, 8.0 after environmental;
Outer contact: 1.0 mΩ initial, 1.5 after environmental
Braid to body: 1.0 mΩ initial, after environmental N/A
Insulation Resistance: 1,000 MΩ Min.
Insertion Loss: Straight connector: 0.30 dB @ 1.5 GHz
Right angle connector: 0.60 dB @ 1.5 GHz
RF Leakage: -55 dB Min. @ 2-3 GHz



Mechanical
Mating:Snap-on coupling per MIL-STD-348
Braid/Jacket Cable Affixment:Hex crimp
Center Conductor Cable Affixment:Solder
Engagement Forces: Engagement: 14 lbs maximum
Disengagement: 2 lbs minimum
Durability: 500 cycles Min.
Temperature Range:- 65°C to +165°C

Material
Center Contact:
Female: beryllium copper, gold-plated
Male: brass or beryllium copper, gold-plated
Outer Contact Plating: Nickel or gold plating
Body:Brass or zinc
Body Plating: Nickel or gold plating
Insulator: TFE
Crimp Ferrule:Annealed copper alloy

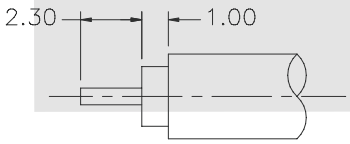

RECOMMENDED CABLE
STRIPPING DIMENSIONS

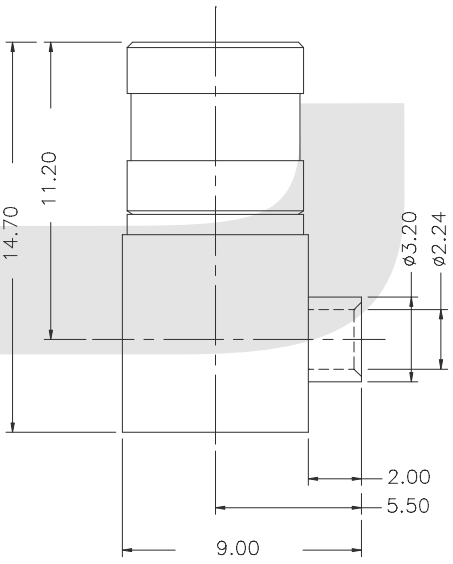

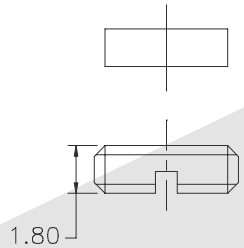

ORDER INFORMATION

Product NO.: KLS1-SMB005
Pos. NO.
SMB Connector Type

SMB Connector Series

KLS1-SMB006 SMB Connector Series



Electrical Specifications
Impedance: 50 Ω
Frequency Range: 0-4 GHz with low reflection; usable to 10.0 GHz
Voltage Rating for RG-188/U Cable:
335 volts at sea level and 85 volts at 70,000 feet
Dielectric Withstanding Voltage: RG-196: 750 VRMS;
RG-188: 1,000 VRMS
VSWR: Straight connector, RG-196/U: 1.30±0 .04 f (GHz)
Right angle connector, RG-196/U: 1.45±0 .06 f (GHz)
Straight connector, RG-188/U: 1.25±0 .04 f (GHz)
Right angle connector, RG-188/U: 1.35±0 .04 f (GHz)
Contact Resistance:
Center contact: 6.0 mΩ initial, 8.0 after environmental;
Outer contact: 1.0 mΩ initial, 1.5 after environmental
Braid to body: 1.0 mΩ initial, after environmental N/A
Insulation Resistance: 1,000 MΩ Min.
Insertion Loss: Straight connector: 0.30 dB @ 1.5 GHz
Right angle connector: 0.60 dB @ 1.5 GHz
RF Leakage: -55 dB Min. @ 2-3 GHz

Mechanical
Mating:Snap-on coupling per MIL-STD-348
Braid/Jacket Cable Affixment:Hex crimp
Center Conductor Cable Affixment:Solder
Engagement Forces: Engagement: 14 lbs maximum
Disengagement: 2 lbs minimum
Durability: 500 cycles Min.
Temperature Range:- 65°C to +165°C

Material
Center Contact:
Female: beryllium copper, gold-plated
Male: brass or beryllium copper, gold-plated
Outer Contact Plating: Nickel or gold plating
Body:Brass or zinc
Body Plating: Nickel or gold plating
Insulator: TFE
Crimp Ferrule:Annealed copper alloy

Cable Group: RG-55, RG-142, RG-223, RG-400

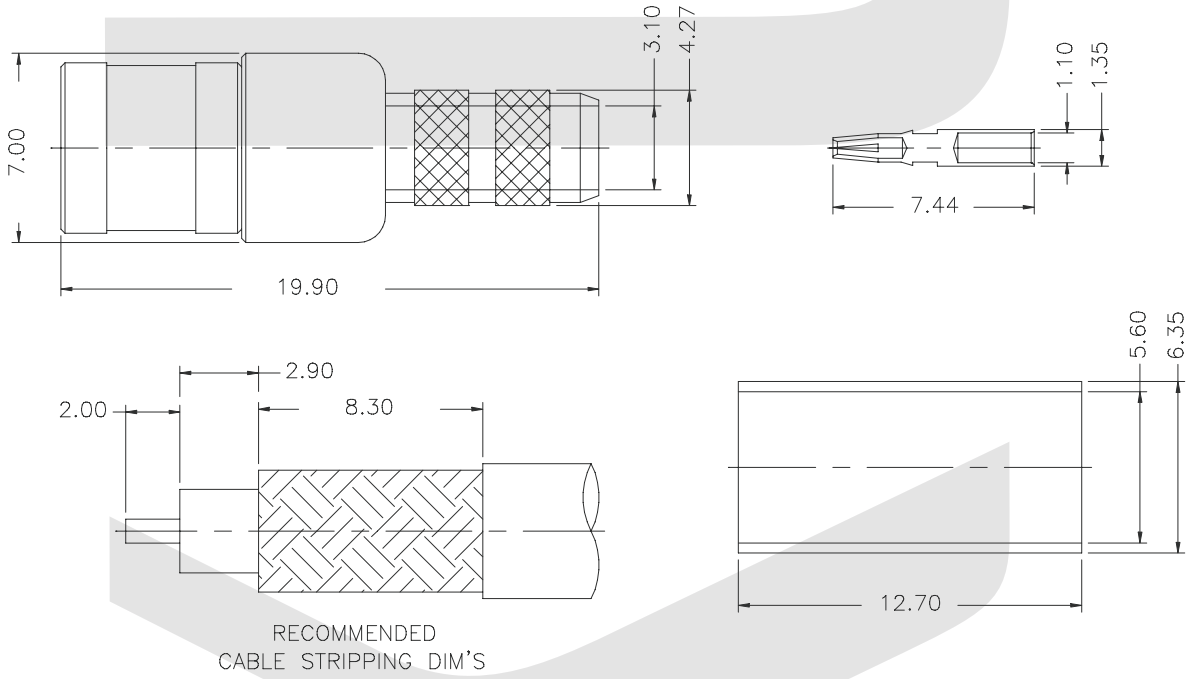

ORDER INFORMATION

Product NO.: KLS1-SMB006
Pos. NO.
SMB Connector Type

SMB Connector Series

KLS1-SMB007 SMB Connector Series



Electrical Specifications
Impedance: 50 Ω
Frequency Range: 0-4 GHz with low reflection; usable to 10.0 GHz
Voltage Rating for RG-188/U Cable:
335 volts at sea level and 85 volts at 70,000 feet
Dielectric Withstanding Voltage: RG-196: 750 VRMS;
RG-188: 1,000 VRMS
VSWR: Straight connector, RG-196/U: 1.30±0 .04 f (GHz)
Right angle connector, RG-196/U: 1.45±0 .06 f (GHz)
Straight connector, RG-188/U: 1.25±0 .04 f (GHz)
Right angle connector, RG-188/U: 1.35±0 .04 f (GHz)
Contact Resistance:
Center contact: 6.0 mΩ initial, 8.0 after environmental;
Outer contact: 1.0 mΩ initial, 1.5 after environmental
Braid to body: 1.0 mΩ initial, after environmental N/A
Insulation Resistance: 1,000 MΩ Min.
Insertion Loss: Straight connector: 0.30 dB @ 1.5 GHz
Right angle connector: 0.60 dB @ 1.5 GHz
RF Leakage: -55 dB Min. @ 2-3 GHz

Mechanical
Mating:Snap-on coupling per MIL-STD-348
Braid/Jacket Cable Affixment:Hex crimp
Center Conductor Cable Affixment:Solder
Engagement Forces: Engagement: 14 lbs maximum
Disengagement: 2 lbs minimum
Durability: 500 cycles Min.
Temperature Range:- 65°C to +165°C

Material
Center Contact:
Female: beryllium copper, gold-plated
Male: brass or beryllium copper, gold-plated
Outer Contact Plating: Nickel or gold plating
Body:Brass or zinc
Body Plating: Nickel or gold plating
Insulator: TFE
Crimp Ferrule:Annealed copper alloy

Cable Group: RG-174, RG-188A, RG-316

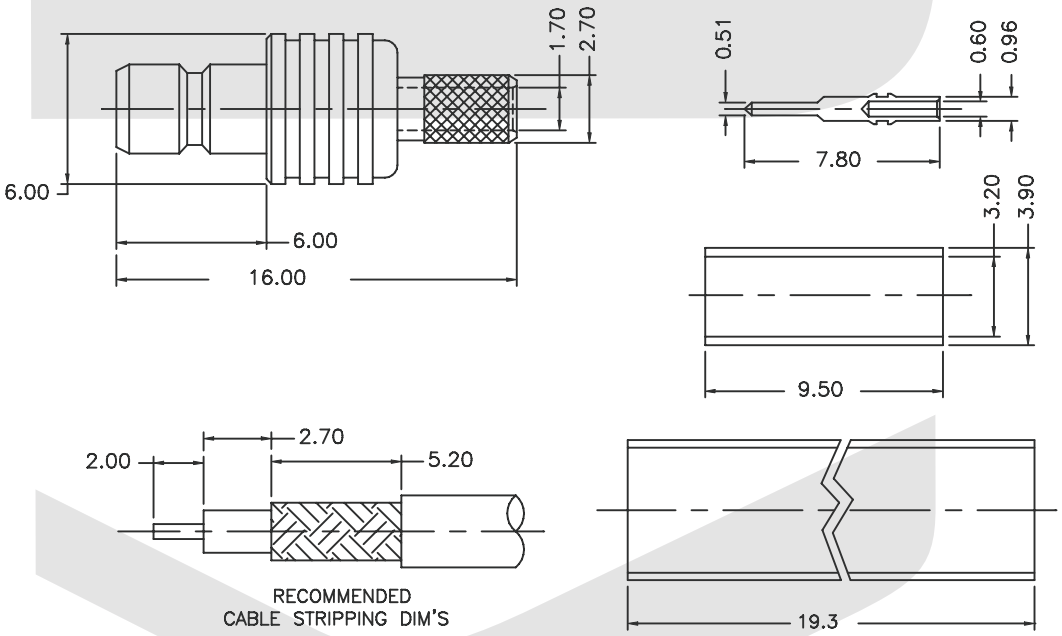

ORDER INFORMATION

Product NO.: KLS1-SMB007

Pos. NO.

SMB Connector Type

SMB Connector Series

KLS1-SMB008 SMB Connector Series



Electrical Specifications
Impedance: 50 Ω
Frequency Range: 0-4 GHz with low reflection; usable to 10.0 GHz
Voltage Rating for RG-188/U Cable:
335 volts at sea level and 85 volts at 70,000 feet
Dielectric Withstanding Voltage: RG-196: 750 VRMS;
RG-188: 1,000 VRMS
VSWR: Straight connector, RG-196/U: 1.30±0 .04 f (GHz)
Right angle connector, RG-196/U: 1.45±0 .06 f (GHz)
Straight connector, RG-188/U: 1.25±0 .04 f (GHz)
Right angle connector, RG-188/U: 1.35±0 .04 f (GHz)
Contact Resistance:
Center contact: 6.0 mΩ initial, 8.0 after environmental;
Outer contact: 1.0 mΩ initial, 1.5 after environmental
Braid to body: 1.0 mΩ initial, after environmental N/A
Insulation Resistance: 1,000 MΩ Min.
Insertion Loss: Straight connector: 0.30 dB @ 1.5 GHz
Right angle connector: 0.60 dB @ 1.5 GHz
RF Leakage: -55 dB Min. @ 2-3 GHz

Mechanical
Mating:Snap-on coupling per MIL-STD-348
Braid/Jacket Cable Affixment:Hex crimp
Center Conductor Cable Affixment:Solder
Engagement Forces: Engagement: 14 lbs maximum
Disengagement: 2 lbs minimum
Durability: 500 cycles Min.
Temperature Range:- 65°C to +165°C

Material
Center Contact:
Female: beryllium copper, gold-plated
Male: brass or beryllium copper, gold-plated
Outer Contact Plating: Nickel or gold plating
Body:Brass or zinc
Body Plating: Nickel or gold plating
Insulator: TFE
Crimp Ferrule:Annealed copper alloy

Cable Group: RG-178, RG-196

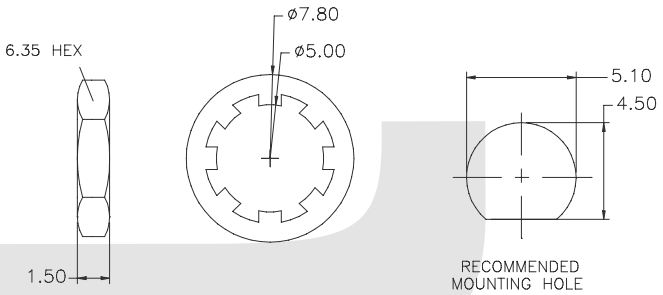

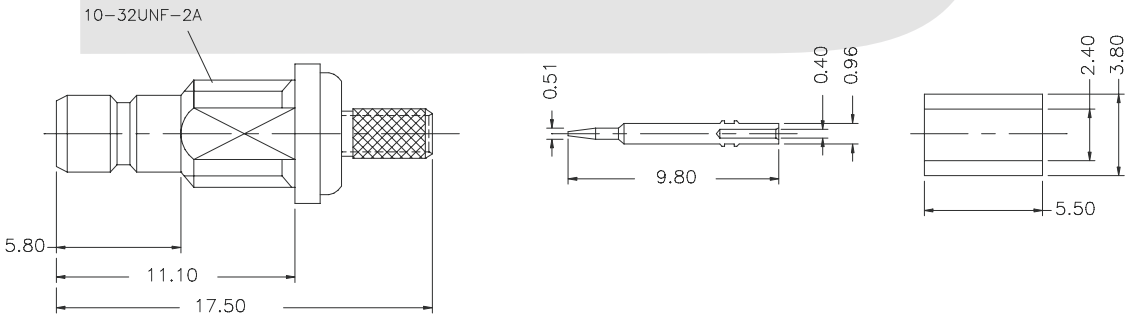

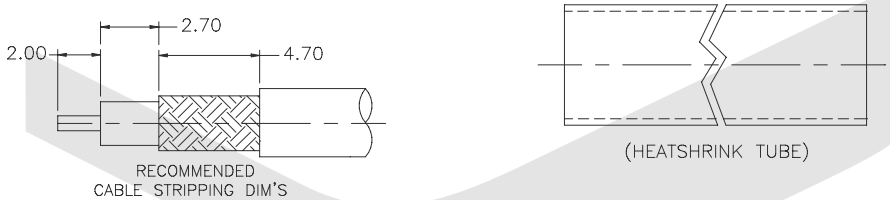

ORDER INFORMATION

Product NO.: KLS1-SMB008
Pos. NO.
SMB Connector Type

SMB Connector Series

KLS1-SMB009 SMB Connector Series

Electrical Specifications
Impedance: 50 Ω
Frequency Range: 0-4 GHz with low reflection; usable to 10.0 GHz
Voltage Rating for RG-188/U Cable:
335 volts at sea level and 85 volts at 70,000 feet
Dielectric Withstanding Voltage: RG-196: 750 VRMS;
RG-188: 1,000 VRMS
VSWR: Straight connector, RG-196/U: 1.30±0 .04 f (GHz)
Right angle connector, RG-196/U: 1.45±0 .06 f (GHz)
Straight connector, RG-188/U: 1.25±0 .04 f (GHz)
Right angle connector, RG-188/U: 1.35±0 .04 f (GHz)
Contact Resistance:
Center contact: 6.0 mΩ initial, 8.0 after environmental;
Outer contact: 1.0 mΩ initial, 1.5 after environmental
Braid to body: 1.0 mΩ initial, after environmental N/A
Insulation Resistance: 1,000 MΩ Min.
Insertion Loss: Straight connector: 0.30 dB @ 1.5 GHz
Right angle connector: 0.60 dB @ 1.5 GHz
RF Leakage: -55 dB Min. @ 2-3 GHz



Mechanical
Mating:Snap-on coupling per MIL-STD-348
Braid/Jacket Cable Affixment:Hex crimp
Center Conductor Cable Affixment:Solder
Engagement Forces: Engagement: 14 lbs maximum
Disengagement: 2 lbs minimum
Durability: 500 cycles Min.
Temperature Range:- 65°C to +165°C

Material
Center Contact:
Female: beryllium copper, gold-plated
Male: brass or beryllium copper, gold-plated
Outer Contact Plating: Nickel or gold plating
Body:Brass or zinc
Body Plating: Nickel or gold plating
Insulator: TFE
Crimp Ferrule:Annealed copper alloy

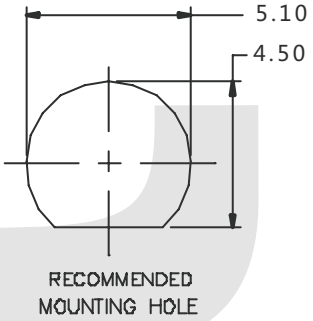

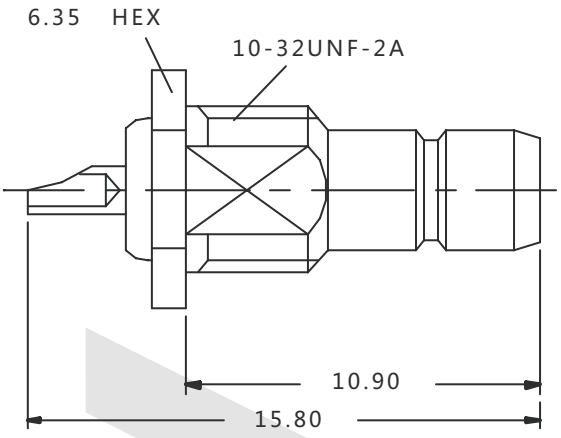

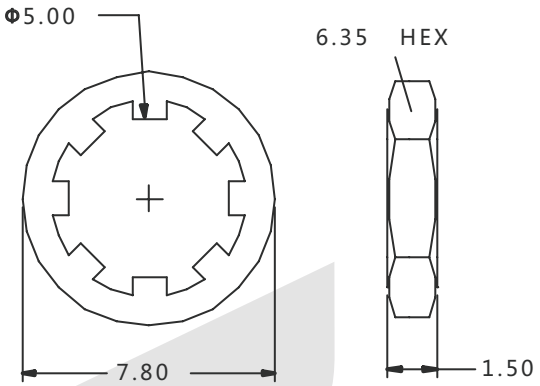

ORDER INFORMATION

Product NO.: KLS1-SMB009
Pos. NO.
SMB Connector Type

GSM Antennas Series

KLS1-GSM-01

Specification:
Frequency : 800/900/1800/1900 MHz
Gain : 1.5dBi
VSWR ≤2.0:1
Impedance : 50 ohm
Standard Connector : SMA
Operating Temperature : -40℃ to +80℃



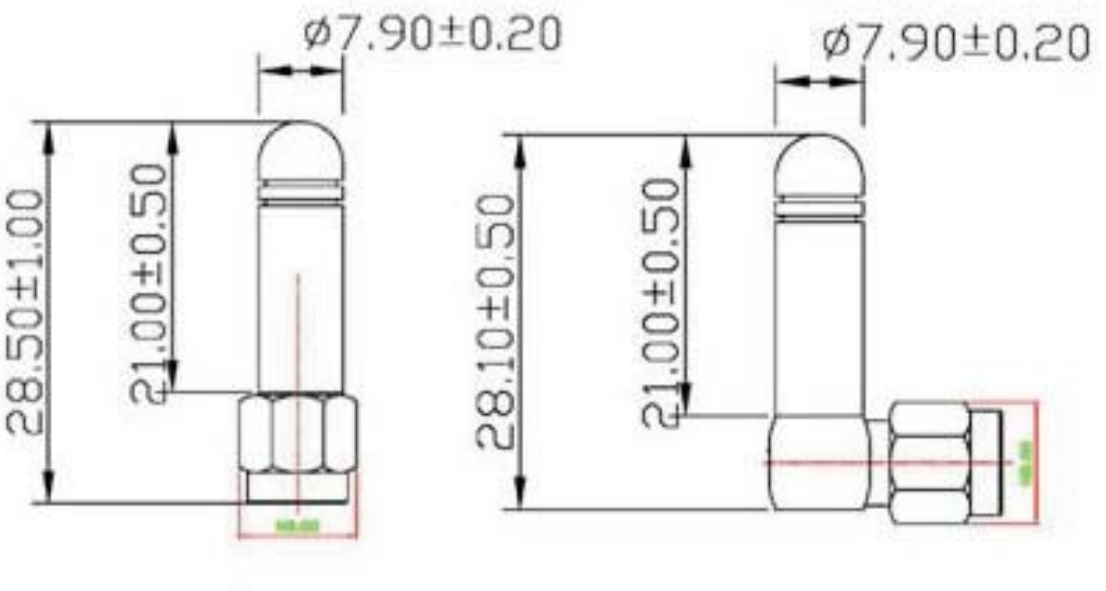

ORDER INFORMATION

Product No. : KLS1-GSM-01-MS-28MM

Pos. NO.
Series NO.
Connector Type:
MS-SMA Male Straight Connector
MR-SMA Male Right Connector
FS-SMA Female Straight Connector
FR-SMA Female Right Connector
Length-28mm

GSM Antennas Series

KLS1-GSM-02

Specification:

Frequency : 800/900/1800/1900 MHz
Gain : 2.15-3dBi
VSWR ≤2.0:1
Impedance : 50 ohm
Standard Connector : SMA
Operating Temperature : -40 C to +80 C





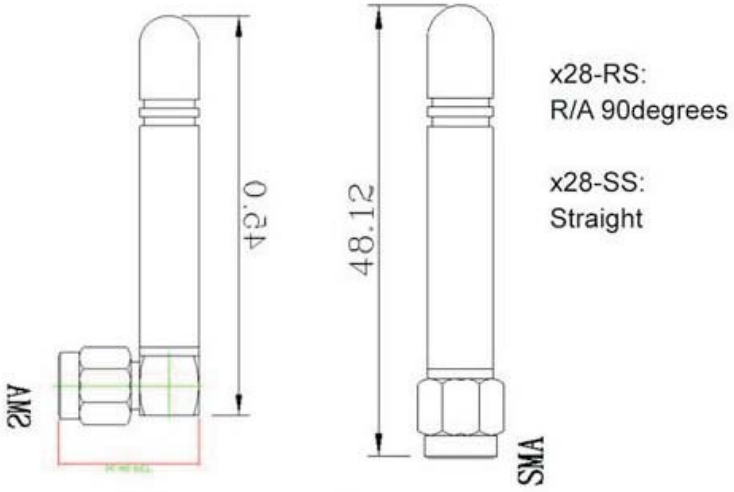

ORDER INFORMATION

Product No. : KLS1-GSM-02-MS-48MM

Pos. NO.
Series NO.
Connector Type:
MS-SMA Male Straight Connector
MR-SMA Male Right Connector
FS-SMA Female Straight Connector
FR-SMA Female Right Connector
Length-48mm or 76mm,90mm

GSM Antennas Series

KLS1-GSM-04

Specification:

Frequency : 800/900/1800/1900MHz
Gain : 2.15-3dBi
VSWR ≤2.0:1
Impedance : 50 ohm
Standard Connector : SMA
Operating Temperature : -40 C to +80 C



ORDER INFORMATION

Product No. : KLS1-GSM-04-SMA-F-3DBI-90MM

Pos. NO.

Series NO.

Connector Type:
SMA-F:SMA Female Connector
SMA-M:SMA male Connector

Normal Gain: 2.15dbi/3dbi

Antenna Length:2.15dbi:50mm/3dbi:90mm,105mm

GSM Antennas Series

KLS1-GSM-05

Specification:

Frequency : 800/900/1800/1900MHz
Gain : 3.5dBi
VSWR ≤1.5:1
Impedance : 50 ohm
Standard Connector : SMA
Operating Temperature : -40 C to +80 C



ORDER INFORMATION

Product No. : KLS1-GSM-05-SMA-F-RG174-1000MM

- **Pos. NO.**
- **Series NO.**
- **Connector Type:SMA/SMB/SMC/BNC /FME TNC/MCX /MMCX or other**
- **F:Female Connector M:male Connector**
- **Cable type:RG174, RG316, 1.13dia...etc**
- **Cable Length-1000mm,3000,5000 or other**

GSM Antennas Series

KLS1-GSM-06

Specification:

Frequency : 800/900/1800/1900MHz
Gain : 3.0dBi
VSWR ≤1.5:1
Impedance : 50 ohm
Standard Connector : SMA
Operating Temperature : -40 C to +80 C



ORDER INFORMATION

Product No. : KLS1-GSM-06-SMA-F-RG174-1000MM-90MM

- **Pos. NO.**
- **Series NO.**
- **Connector Type: SMA,BNC,FAKRA FME or other**
- **F:Female Connector M:male Connector**
- **Cable type:RG174, RG316, 1.13dia...etc,**
- **Cable Length-1000mm,3000,5000 or other**
- **Antenna Length-90mm,105mm**

GSM Antennas Series

KLS1-GSM-07

Specification:

Frequency : 800/900/1800/1900MHz
Gain : 3.0dBi
VSWR ≤1.5:1
Impedance : 50 ohm
Standard Connector : SMA
Operating Temperature : -40 C to +80 C



ORDER INFORMATION

Product No. : KLS1-GSM-07-SMA-F-RG174-1000MM

- **Pos. NO.**
- **Series NO.**
- **Connector Type: SMA/SMB/SMC/BNC/FME TNC/MCX /MMCX or other**
- **F:Female Connector M:male Connector**
- **Cable type:RG174, RG316, 1.13dia...etc**
- **Cable Length-1000mm,3000,5000 or other**

Wifi Antenna 2.4/5.2/5.8GHz Series

KLS1-WIFI-2.4G-01 WIFI 2.4GHz Dipole Antenna Series

ELECTRICAL SPECIFICATION:
- Antenna Type: Monopole Antenna
- Frequency Range: 2.4GHz
- VSWR: ≤1.5:1
- Impedance: 50ohm nominal
- Normal Gain: 2-3dBi
- Return Loss:17 dB
- Max. Power: 50W
- Electrical Wave: 1/4

MECHANICAL SPECIFICATION:
- Antenna Cover: PU
- Color: Black
- Operation Temperature: -40°C~+80°C





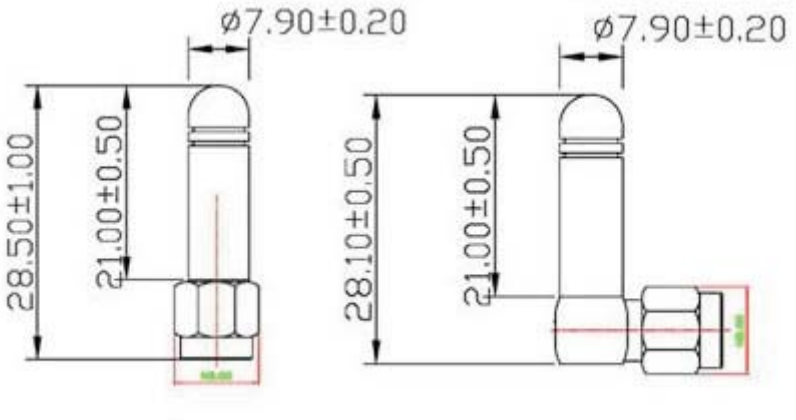

ORDER INFORMATION

Product No. : KLS1-WIFI-2.4G-02-MS-28MM

Pos. NO.
Series NO.
Connector Type: **MS-SMA Male Straight Connector**
MR-SMA Male Right Connector
FS-SMA Female Straight Connector
FR-SMA Female Right Connector
Length-28mm

Wifi Antenna 2.4/5.2/5.8GHz Series

KLS1-WIFI-2.4G-02 WIFI 2.4GHz Dipole Antenna Series

ELECTRICAL SPECIFICATION:
- Antenna Type: Diople Antenna
- Frequency Range: 2.4GHz
- VSWR: ≤1.5:1
- Impedance: 50ohm nominal
- Normal Gain: 2-3dBi
- Return Loss: 17 dB
- Max. Power: 50W
- Electrical Wave: 1/4

MECHANICAL SPECIFICATION:
- Antenna Cover: PU
- Color: Black
- Operation Temperature: -40°C~+80°C

Other available Frequency:
- 2.4/5GHz
- 900/1800MHz
- 800/1900MHz
- Quad Bands 850/900/1800/1900MHz
- 318MHz
- 433MHz
- Can adjust to other frequency for OEM projects



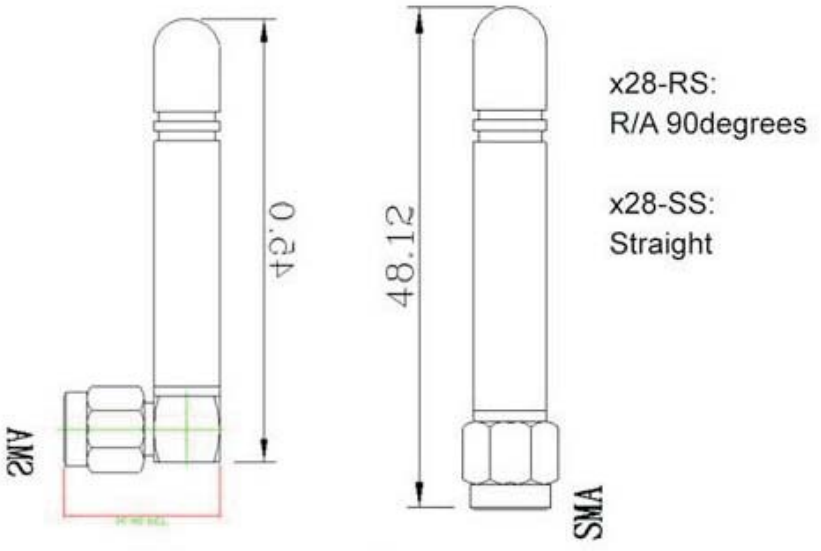

ORDER INFORMATION

Product No. : KLS1-WIFI-2.4G-02-MS-48MM

Pos. NO.
Series NO.
Connector Type: MS-SMA Male Straight Connector
MR-SMA Male Right Connector
Length-48mm or 76mm,90mm

Wifi Antenna 2.4/5.2/5.8GHz Series

KLS1-WIFI-2.4G-03 WIFI 2.4GHz Dipole Antenna Series

ELECTRICAL SPECIFICATION:

- Antenna Type: Diople Antenna
- Frequency Range: 2.4GHz
- VSWR: ≤1.5:1
- Impedance: 50ohm nominal
- Normal Gain: 2-3dBi
- Return Loss: 17 dB
- Max. Power: 50W
- Electrical Wave: 1/4

MECHANICAL SPECIFICATION:

- Antenna Cover: PU
- Color: Black
- Operation Temperature: -40°C~+80°C

Other available Frequency:

- 2.4/5GHz
- 900/1800MHz
- 800/1900MHz
- Quad Bands 850/900/1800/1900MHz
- 318MHz
- 433MHz
- Can adjust to other frequency for OEM projects





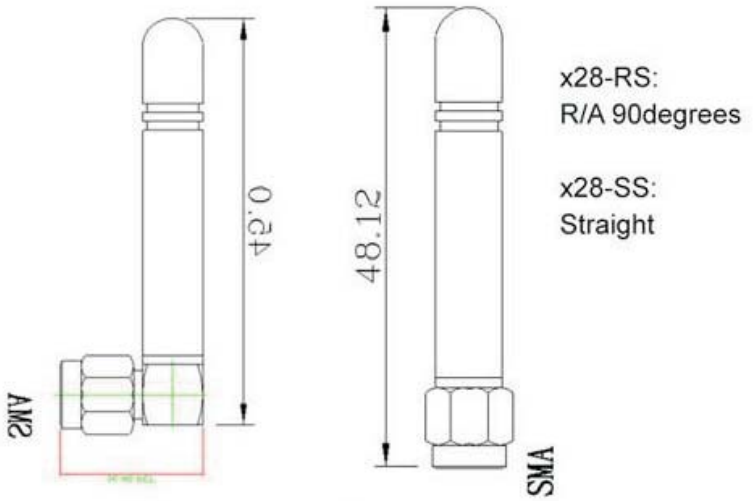

ORDER INFORMATION

Product No. : KLS1-WIFI-2.4G-02-MS-48MM

Pos. NO.

Series NO.

Connector Type: FS-SMA Female Straight Connector
FR-SMA Female Right Connector

Length-48mm or 76mm,90mm

Wifi Antenna 2.4/5.2/5.8GHz Series

KLS1-WIFI-2.4G-04 WIFI 2.4GHz Dipole Antenna Series

ELECTRICAL SPECIFICATION:
- Antenna Type: Diople Antenna
- Frequency Range: 2.4GHz
- VSWR: ≤1.5:1
- Impedance: 50ohm nominal
- Normal Gain: 2-3dBi
- Return Loss: 17 dB
- Max. Power: 50W
- Electrical Wave: 1/4

MECHANICAL SPECIFICATION:
- Antenna Cover: PU
- Color: Black
- Operation Temperature: -40°C~+80°C

Other available Frequency:
- Tri-Band: 2.4/5.2/5.8GHz (2.4~2.5GHz & 4.9~5.825GHz)
- 5.2GHz
- 900/1800MHz
- 800/1900MHz
- Single Band in 800MHz, 900MHz, 1800MHz or 1900MHz
- 433MHz
- Can adjust to other frequency for OEM projects



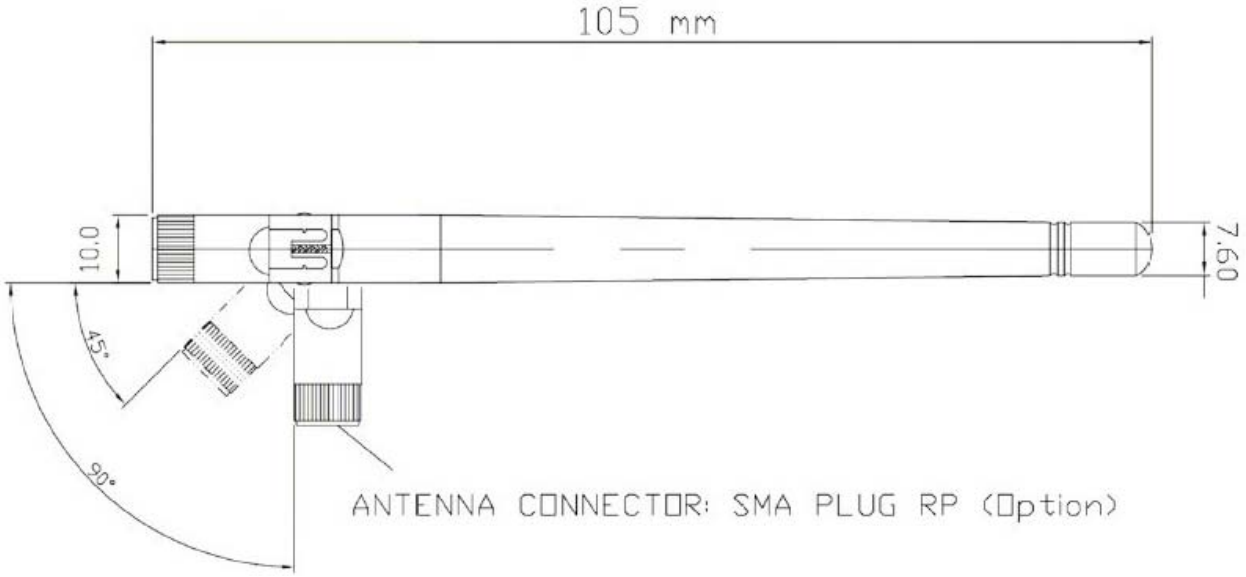

ORDER INFORMATION

Product No. : KLS1-WIFI-2.4G-04-SMA-F-3DBI-90MM

Pos. NO.
Series NO.
Connector Type: SMA-F:SMA Female Connector
SMA-M:SMA male Connector
Normal Gain: 3dbi,5dBi,7dBi,9dBi
Antenna Length:3dbi:90mm,105mm/5dbi:195mm,235mm
7dbi:260mm/9dbi:295mm,433mm

Wifi Antenna 2.4/5.2/5.8GHz Series

KLS1-WIFI-2.4G-05 WIFI 2.4GHz PCB Antenna

ELECTRICAL SPECIFICATION
- Antenna Type: PCB Antenna
- Frequency Range: 2.4-2.5GHz
- VSWR: ≤1.5:1
- Impedance: 50ohm nominal
- Normal Gain: 3.5 dBi
- Type of Radiation: Omni
- Electrical Wave: 1/4
- Connector: SMA,BNC,TNC,FME,MMCX, MCX,IPEX...etc, and custom by customer demands
- Cable Length:RG174, RG316, 1.13dia...etc, and custom by customer demands
- OEM/ODM Spec is welcome!

MECHANICAL SPECIFICATION:
- Antenna Cover: PU
- Color: Black
- Operation Temperature: -40°C~+80°C

Other available Frequency:
- GSM/CDMA Quad bands
- 2.4/5GHz
- Can adjust to other frequency for OEM projects



ORDER INFORMATION

Product No. : KLS1-WIFI-2.4G-05-SMA-F-RG174-1000MM

Pos. NO.
Series NO.
Connector Type: SMA,BNC,TNC,FME MMCX, MCX,IPEX...etc
F:Female Connector M:male Connector
Cable type:RG174, RG316, 1.13dia...etc
Cable Length-1000mm,3000,5000 or other

Wifi Antenna 2.4/5.2/5.8GHz Series

KLS1-WIFI-2.4G-06 WIFI 2.4GHz Diople Antenna

ELECTRICAL SPECIFICATION

- Antenna Type: PCB Antenna
- Frequency Range: 2.4-2.5GHz
- VSWR: ≤1.5:1
- Impedance: 50ohm nominal
- Normal Gain: 3.5 dBi
- Type of Radiation: Omni
- Electrical Wave: 1/4
- Connector: SMA,SMB,BNC,TNC,FME,MMCX,.....etc, and custom by customer demands
- Cable Length:RG178, RG174,RG58 and custom by customer demands
- OEM/ODM Spec is welcome!

MECHANICAL SPECIFICATION:

- Antenna Cover: PU
- Color: Black
- Operation Temperature: -40°C~+80°C

Other available Frequency:

- Tri-Band: 2.4/5.2/5.8GHz
- Can adjust to other frequency for OEM projects



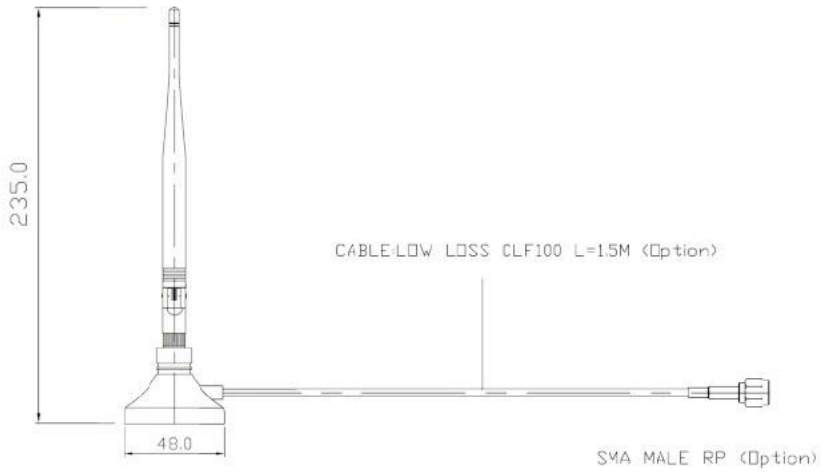

ORDER INFORMATION

Product No. : KLS1-WIFI-2.4G-06-SMA-F-RG174-1000MM-5DBI

Pos. NO.

Series NO.

Connector Type: SMA,SMB,BNC,TNC FME,MMCX,.....etc

F:Female Connector M:male Connector

Cable type:RG174, RG316, 1.13dia...etc

Cable Length-1000mm,3000,5000 or other

Normal Gain: 3dbi,5dBi,7dBi,9dBi

(Antenna Length:3dbi:290mm/5dbi:142mm,235mm/7dbi:290mm/9dbi:350mm)

GPS Antennas Series

KLS1-GPS-01-BNC (Active Antenna)



Features :
Compatible with GPS receivers/systems with a BNC connector for external antennas
Built-in GPS signal amplifier to enhance and improve GPS signal reception
Optional mounting: removable magnetic mount or fixed adhesive mount (Default: magnetic mount)
Optional straight or right angle connector type (Default: straight type)

Specifications:

Dieletric Antenna:
Center Frequency: 1575.42MHz±3 MHz
V.S.W.R 1.5:1
Band Width: ±5 MHz
Impendence: 50 ohm
Peak Gain >3dBic Based on 7 x 7cm ground plane
Gain Coverage >-4dBic at -90° ~ +90° (over 75% Volume)
Polarization: RHCP

LNA/Filter :
LNA Gain (without cable): 28dB typical
Noise Figure 1.5dB
Filter Out Band Attenuation: (f0=1575.42 MHZ)
7dB in f0+/-20MHZ
20dB in f0+/-50MHZ
30dB in f0+/-100MHZ
V.S.W.R < 2.0
DC Voltage 2.2V to 5.0V
DC Current < 5mA

Mechanical:
Weight: <110gram
Size: 48 x 40 x 13 mm or 43x34x13mm or 34x30x13 mm
Cable: RG174 5 meter or other
Connector: BNC male straight or right angle
Mounting: magnetic base or adhesive
Housing color: Black

Environmental:
Working Temp: -40oC~+85oC
Storage Temp: -45oC~+100oC
Vibration Sine sweep: 1g(0-p)10~50~10Hz each axis
Humidity Humidity: 95%~100% RH
Weatherproof: 100% Waterproof
Compatible GPS Devices:
All GPS receivers/systems with a BNC connector for external antennas.

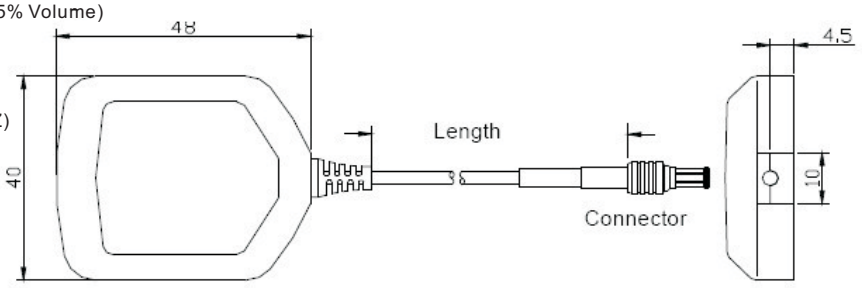

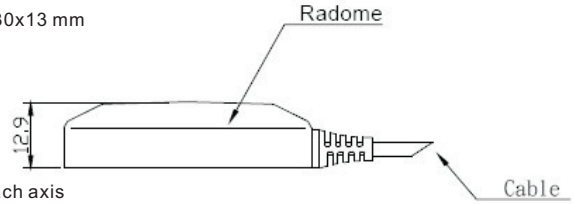

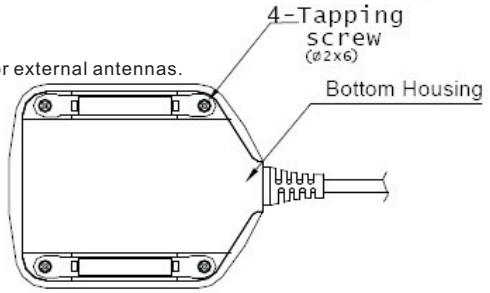

M Series
Radome: ABS+PC
Bottom Housing: Aluminum
Unit: mm

UNLESS OTHERWISE SPECIFIED DIMENSIONS ARE IN MILLIMETER TOLERANCES:	
ANGLE	± 1°
1 PLACE DECIMALS	±0.2
2 PLACE DECIMALS	±0.15
3 PLACE DECIMALS	±0.05

ORDER INFORMATION

Product No. : KLS1-GPS-01A-BNC-M-RG174-1000MM

Pos. NO.

Series NO.:01A(Size:48x40x13mm)
01B(Size:43x34x13 mm)
01C(Size:34x30x13 mm)

Connector Type:SMA,SMB,SMC,BNC
FME,TNC,MCX ,MMCX

F:Female Connector M:male Connector

Cable Type:RG174

Cable Length-1000mm,3000,5000 or other

GPS Antennas Series

KLS1-GPS-01-MCX (Active Antenna)



Features :
Compatible with GPS devices (PDA/PNA/PPC/Navigator etc.) with a MCX connector for external antennas
Built-in GPS signal amplifier to enhance and improve GPS signal reception
Optional mounting: removable magnetic mount or fixed adhesive mount (Default: magnetic mount)
Optional straight or right angle connector type (Default: straight type)

Specifications:

Dieletric Antenna:
Center Frequency: 1575.42MHz±3 MHz
V.S.W.R 1.5:1
Band Width: ±5 MHz
Impendence: 50 ohm
Peak Gain >3dBic Based on 7 x 7cm ground plane
Gain Coverage >-4dBic at -90° ~ +90° (over 75% Volume)
Polarization: RHCP

LNA/Filter :
LNA Gain (without cable): 28dB typical
Noise Figure 1.5dB
Filter Out Band Attenuation: (f0=1575.42 MHZ)
7dB in f0+/-20MHZ
20dB in f0+/-50MHZ
30dB in f0+/-100MHZ
V.S.W.R < 2.0
DC Voltage 2.2V to 5.0V
DC Current < 15mA

Mechanical:
Weight: <110gram
Size: 48 x 40 x 13 mm or 43x34x13mm or 34x30x13 mm
Cable: RG174 5 meter or other
Connector: MCX male straight or right angle
Mounting: magnetic or adhesive base
Housing color: Black

Environmental:
Working Temp: -40oC~+85oC
Storage Temp: -45oC~+100oC
Vibration Sine sweep: 1g(0-p)10~50~10Hz each axis
Humidity Humidity: 95%~100% RH
Weatherproof: 100% Waterproof
Compatible GPS Devices:
All GPS receivers/systems with a MCX connector for external antennas.

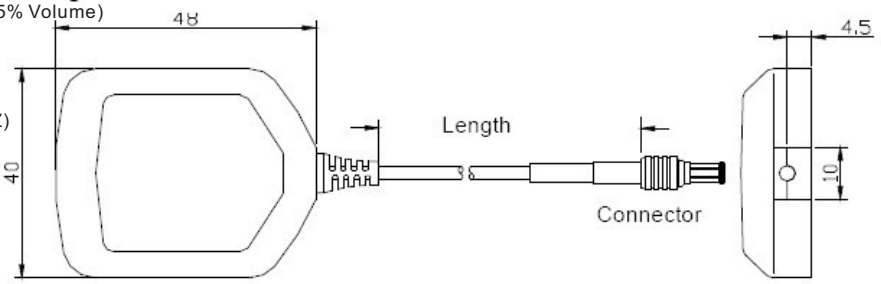

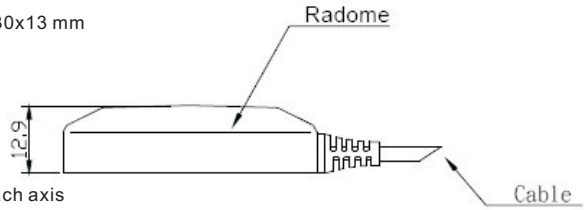

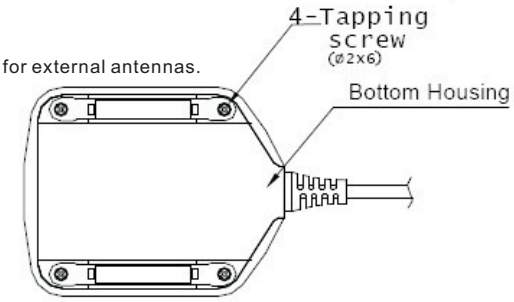

M Series
Radome: ABS+PC
Bottom Housing: Aluminum
Unit: mm

UNLESS OTHERWISE SPECIFIED DIMENSIONS ARE IN MILLIMETER TOLERANCES:	
ANGLE	± 1°
1 PLACE DECIMALS	±0.2
2 PLACE DECIMALS	±0.15
3 PLACE DECIMALS	±0.05

ORDER INFORMATION

Product No. : KLS1-GPS-01A-MCX-M-RG174-1000MM

Pos. NO.

Series NO.:01A(Size:48x40x13mm)
01B(Size:43x34x13 mm)
01C(Size:34x30x13 mm)

Connector Type:SMA,SMB,SMC,BNC
FME,TNC,MCX ,MMCX

F:Female Connector M:male Connector

Cable Type:RG174

Cable Length-1000mm,3000,5000 or other

GPS Antennas Series

KLS1-GPS-01-MMCX (Active Antenna)



Features :
Compatible with GPS devices (PDA/PNA/PPC/Navigator etc.) with a MMCX connector for external antennas
Built-in GPS signal amplifier to enhance and improve GPS signal reception
Optional mounting: removable magnetic mount or adhesive mount (Default: magnetic mount)
Optional straight or right angle connector type (Default: straight type)

Specifications:

Dieletric Antenna:
Center Frequency: 1575.42MHz±3 MHz
V.S.W.R 1.5:1
Band Width: ±5 MHz
Impendence: 50 ohm
Peak Gain >3dBic Based on 7 x 7cm ground plane
Gain Coverage >-4dBic at -90° ~ +90° (over 75% Volume)
Polarization: RHCP

LNA/Filter :
LNA Gain (without cable): 28dB typical
Noise Figure 1.5dB
Filter Out Band Attenuation: (f0=1575.42 MHZ)
7dB in f0+/-20MHZ
20dB in f0+/-50MHZ
30dB in f0+/-100MHZ
V.S.W.R < 2.0
DC Voltage 2.2V to 5.0V
DC Current < 15mA

Mechanical:
Weight: <110gram
Size: 48 x 40 x 13 mm or 43x34x13mm or 34x30x13 mm
Cable: RG174 5 meter or other
Connector: MMCX male straight or right angle
Mounting: magnetic or adhesive base
Housing color: Black

Environmental:
Working Temp: -40oC~+85oC
Storage Temp: -45oC~+100oC
Vibration Sine sweep: 1g(0-p)10~50~10Hz each axis
Humidity Humidity: 95%~100% RH
Weatherproof: 100% Waterproof
Compatible GPS Devices:
All GPS receivers/systems with a MMCX connector for external antennas.

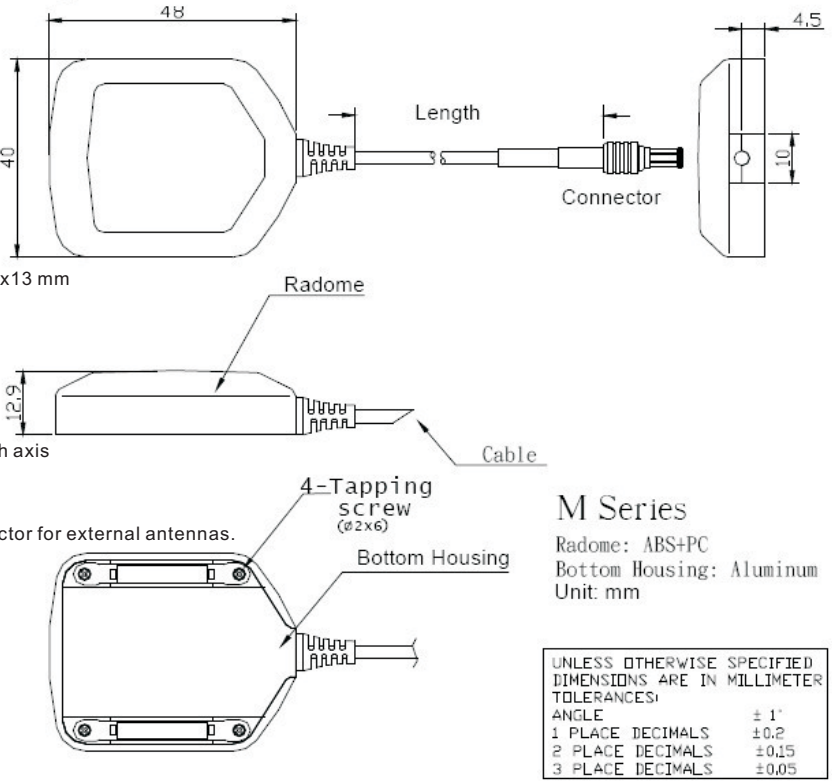

ORDER INFORMATION

Product No. : KLS1-GPS-01A-MMCX-M-RG174-1000MM

Pos. NO.

Series NO.:01A(Size:48x40x13mm)
01B(Size:43x34x13 mm)
01C(Size:34x30x13 mm)

Connector Type:SMA,SMB,SMC,BNC
FME,TNC,MCX ,MMCX

F:Female Connector M:male Connector

Cable Type:RG174

Cable Length-1000mm,3000,5000 or other

GPS Antennas Series

KLS1-GPS-01-SMA (Active Antenna)

Features :
Compatible with GPS receivers/systems with a SMA connector for external antennas
Built-in GPS signal amplifier to enhance and improve GPS signal reception
Optional mounting: removable magnetic mount or adhesive mount (Default: magnetic mount)
Optional straight or right angle connector type (Default: straight type)

Specifications:
Dieletric Antenna :
Center Frequency: 1575.42MHz 3 M Hz
V.S.W.R 1.5:1
Band Width: 5 M Hz
Impendence: 50 ohm
Peak Gain >3dBic Based on 7 x 7cm ground plane
Gain Coverage >-4dBic at -90 to +90 (over 75% Volume)
Polarization: RHCP
LNA/Filter :
LNA Gain (without cable): 28dB typical
Noise Figure 1.5dB
Filter Out Band Attenuation: (f0=1575.42 MHZ)
7dB in f0+/-20MHZ
20dB in f0+/-50MHZ
30dB in f0+/-100MHZ
V.S.W.R < 2.0
DC Voltage 2.2V to 5.0V
DC Current < 15mA

Mechanical:
Weight: <110gram
Size: 48 x 40 x 13 mm or 43x34x13mm or 34x30x13 mm
Cable: RG174 5 meter or other
Connector: SMA or SMA/SMB/SMC/BNC/FME/TNC/MCX /MMCX
Mounting: magnetic base or adhesive
Housing color: Black

Environmental:
Working Temp: -40oC~+85oC
Storage Temp: -45oC~+100oC
Vibration Sine sweep: 1g(0-p)10~50~10Hz each axis
Humidity Humidity: 95%~100% RH
Weatherproof: 100% Waterproof
Compatible GPS Devices:
All GPS receivers/systems with a SMA connector for external antennas



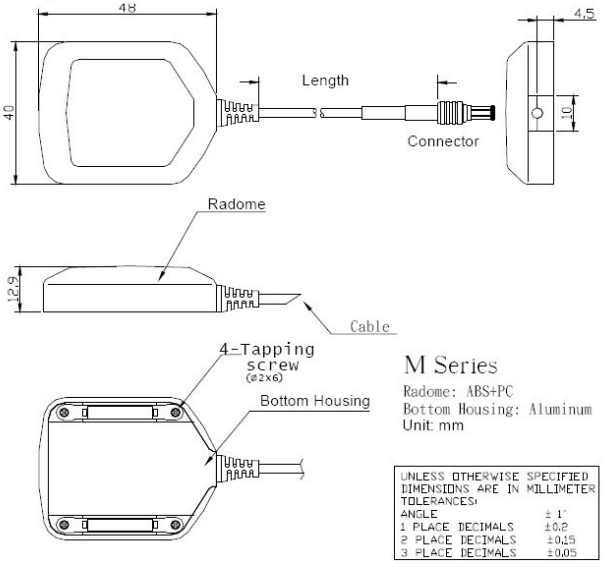

ORDER INFORMATION

Product No. : KLS1-GPS-01A-SMA-MS-RG174-1000MM

Pos. NO.

Series NO.:01A(Size:48x40x13mm)
01B(Size:43x34x13 mm)
01C(Size:34x30x13 mm)

Connector Type:SMA,SMB,SMC,BNC
FME,TNC,MCX ,MMCX

Connector Type:MS-SMA Male Straight Connector
MR-SMA Male Right Connector
FS-SMA Female Straight Connector
FR-SMA Female Right Connector

Cable Type:RG174

Cable Length-1000mm,3000,5000 or other

GPS Antennas Series

KLS1-GPS-01-SMB (Active Antenna)

Features :
Compatible with GPS devices with a SMB male connector for external antennas
Built-in GPS signal amplifier to enhance and improve GPS signal reception
Optional mounting: removable magnetic mount or adhesive mount (Default: magnetic mount)
Optional straight or right angle connector type (Default: straight type)

Specifications:

Dieletric Antenna:
Center Frequency: 1575.42MHz±3 MHz
V.S.W.R 1.5:1
Band Width: ±5 MHz
Impendence: 50 ohm
Peak Gain >3dBic Based on 7 x 7cm ground plane
Gain Coverage >-4dBic at -90° ~ +90° (over 75% Volume)
Polarization: RHCP

LNA/Filter :
LNA Gain (without cable): 28dB typical
Noise Figure 1.5dB
Filter Out Band Attenuation: (f0=1575.42 MHZ)
7dB in f0+/-20MHZ
20dB in f0+/-50MHZ
30dB in f0+/-100MHZ
V.S.W.R < 2.0
DC Voltage 2.2V to 5.0V
DC Current < 15mA

Mechanical:
Weight: <110gram
Size: 48 x 40 x 13 mm or 43x34x13mm or 34x30x13 mm
Cable: RG174 5 meter or other
Connector: SMB male straight or right angle
Mounting: magnetic base or adhesive
Housing color: Black

Environmental:
Working Temp: -40oC~+85oC
Storage Temp: -45oC~+100oC
Vibration Sine sweep: 1g(0-p)10~50~10Hz each axis
Humidity Humidity: 95%~100% RH
Weatherproof: 100% Waterproof
Compatible GPS Devices:
All GPS receivers/systems with a SMB male connector for external antennas.



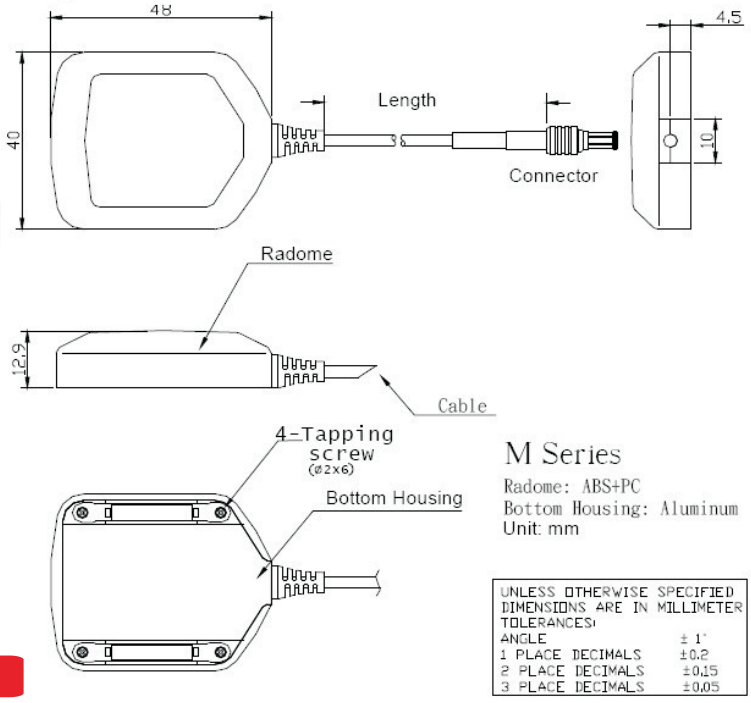

ORDER INFORMATION

Product No. : KLS1-GPS-01A-SMB-M-RG174-1000MM

Pos. NO.

Series NO.:01A(Size:48x40x13mm)
01B(Size:43x34x13 mm)
01C(Size:34x30x13 mm)

Connector Type:SMA,SMB,SMC,BNC
FME,TNC,MCX ,MMCX

F:Female Connector M:male Connector

Cable Type:RG174

Cable Length-1000mm,3000,5000 or other

GPS Antennas Series

KLS1-GPS-01-SMC (Active Antenna)



Features :
Compatible with GPS receivers/systems with a SMC connector for external antennas
Built-in GPS signal amplifier to enhance and improve GPS signal reception
Optional mounting: removable magnetic mount or fixed adhesive mount (Default: magnetic mount)

Specifications:

Dieletric Antenna:
Center Frequency: 1575.42MHz±3 MHz
V.S.W.R 1.5:1
Band Width: ±5 MHz
Impendence: 50 ohm
Peak Gain >3dBic Based on 7 x 7cm ground plane
Gain Coverage >-4dBic at -90° ~ +90° (over 75% Volume)
Polarization: RHCP

LNA/Filter :
LNA Gain (without cable): 28dB typical
Noise Figure 1.5dB
Filter Out Band Attenuation: (f0=1575.42 MHZ)
7dB in f0+/-20MHZ
20dB in f0+/-50MHZ
30dB in f0+/-100MHZ
V.S.W.R < 2.0
DC Voltage 2.2V to 5.0V
DC Current < 5mA

Mechanical:
Weight: <110gram
Size: 48 x 40 x 13 mm or 43x34x13mm or 34x30x13 mm
Cable: RG174 5 meter or other
Connector: SMC male straight or right angle
Mounting: magnetic base or adhesive
Housing color: Black

Environmental:
Working Temp: -40oC~+85oC
Storage Temp: -45oC~+100oC
Vibration Sine sweep: 1g(0-p)10~50~10Hz each axis
Humidity Humidity: 95%~100% RH
Weatherproof: 100% Waterproof
Compatible GPS Devices:
All GPS receivers/systems with a SMC connector for external antennas.

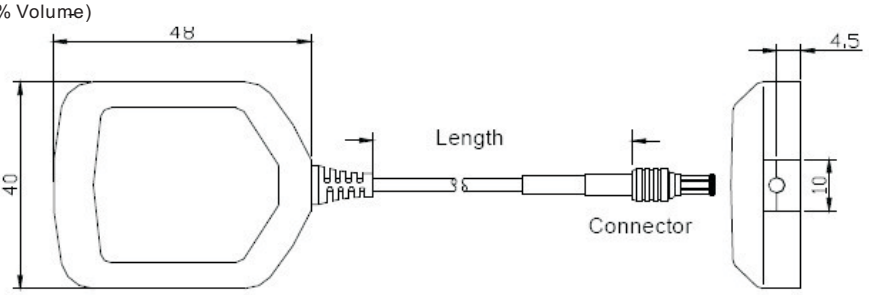

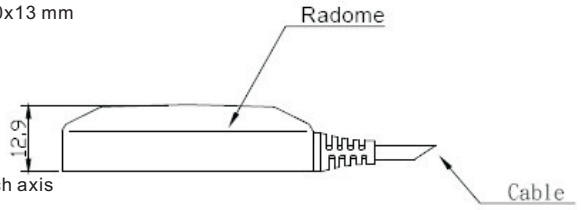

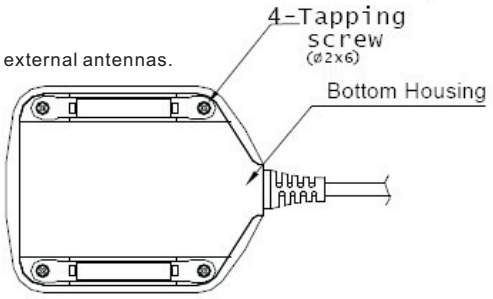

M Series
Radome: ABS+PC
Bottom Housing: Aluminum
Unit: mm

UNLESS OTHERWISE SPECIFIED DIMENSIONS ARE IN MILLIMETER TOLERANCES:	
ANGLE	± 1°
1 PLACE DECIMALS	±0.2
2 PLACE DECIMALS	±0.15
3 PLACE DECIMALS	±0.05

ORDER INFORMATION

Product No. : KLS1-GPS-01A-SMC-M-RG174-1000MM

Pos. NO.

Series NO.:01A(Size:48x40x13mm)
01B(Size:43x34x13 mm)
01C(Size:34x30x13 mm)

Connector Type:SMA,SMB,SMC,BNC
FME,TNC,MCX ,MMCX

F:Female Connector M:male Connector

Cable Type:RG174

Cable Length-1000mm,3000,5000 or other

GPS Antennas Series

KLS1-GPS-01-TNC (Active Antenna)



Features :
Compatible with GPS receivers/systems with a TNC connector for external antennas
Built-in GPS signal amplifier to enhance and improve GPS signal reception
Optional mounting: removable magnetic mount or fixed adhesive mount (Default: magnetic mount)

Specifications:

Dieletric Antenna:
Center Frequency: 1575.42MHz±3 MHz
V.S.W.R 1.5:1
Band Width: ±5 MHz
Impendence: 50 ohm
Peak Gain >3dBic Based on 7 x 7cm ground plane
Gain Coverage >-4dBic at -90° ~ +90° (over 75% Volume)
Polarization: RHCP

LNA/Filter :
LNA Gain (without cable): 28dB typical
Noise Figure 1.5dB
Filter Out Band Attenuation: (f0=1575.42 MHZ)
7dB in f0+/-20MHZ
20dB in f0+/-50MHZ
30dB in f0+/-100MHZ
V.S.W.R < 2.0
DC Voltage 2.2V to 5.0V
DC Current < 5mA

Mechanical:
Weight: <110gram
Size: 48 x 40 x 13 mm or 43x34x13mm or 34x30x13 mm
Cable: RG174 5 meter or other
Connector: TNC male straight or right angle
Mounting: magnetic base or adhesive
Housing color: Black

Environmental:
Working Temp: -40oC~+85oC
Storage Temp: -45oC~+100oC
Vibration Sine sweep: 1g(0-p)10~50~10Hz each axis
Humidity Humidity: 95%~100% RH
Weatherproof: 100% Waterproof
Compatible GPS Devices:
All GPS receivers/systems with a TNC connector for external antennas.

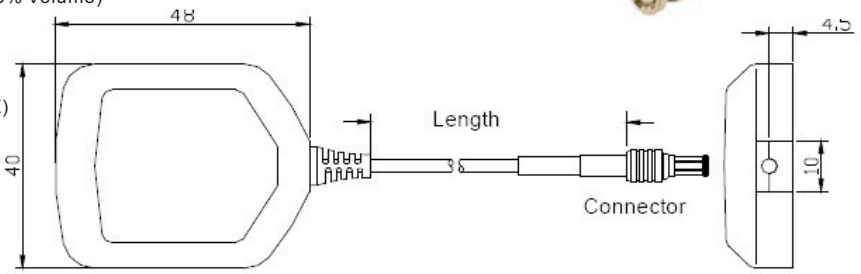

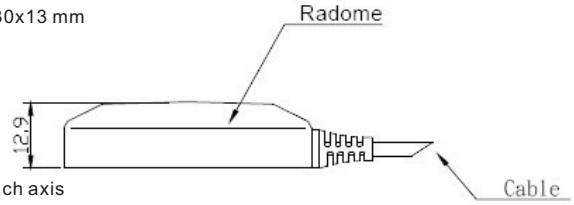

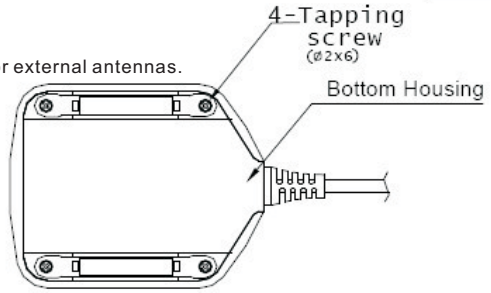

M Series
Radome: ABS+PC
Bottom Housing: Aluminum
Unit: mm

UNLESS OTHERWISE SPECIFIED DIMENSIONS ARE IN MILLIMETER TOLERANCES:	
ANGLE	± 1°
1 PLACE DECIMALS	±0.2
2 PLACE DECIMALS	±0.15
3 PLACE DECIMALS	±0.05

ORDER INFORMATION

Product No. : KLS1-GPS-01A-TNC-M-RG174-1000MM

Pos. NO.

Series NO.:01A(Size:48x40x13mm)
01B(Size:43x34x13 mm)
01C(Size:34x30x13 mm)

Connector Type:SMA,SMB,SMC,BNC
FME,TNC,MCX ,MMCX

F:Female Connector M:male Connector

Cable Type:RG174

Cable Length-1000mm,3000,5000 or other

GPS Antennas Series

KLS1-GPS-02 (Active Antenna)

Features :
Compatible with GPS receivers/systems with a SMA connector for external antennas
Built-in GPS signal amplifier to enhance and improve GPS signal reception
Optional mounting: removable magnetic mount or adhesive mount (Default: magnetic mount)
Optional straight or right angle connector type (Default: straight type)

Specifications:

Dieletric Antenna:
Center Frequency: 1575.42MHz±3 MHz
V.S.W.R 1.5:1
Band Width: ±5 MHz
Impendence: 50 ohm
Peak Gain >3dBic Based on 7 x 7cm ground plane
Gain Coverage >-4dBic at -90° to +90° (over 75% Volume)
Polarization: RHCP

LNA/Filter :
LNA Gain (without cable): 28dB typical
Noise Figure 1.5dB
Filter Out Band Attenuation: (f0=1575.42 MHZ)
7dB in f0+/-20MHZ
20dB in f0+/-50MHZ
30dB in f0+/-100MHZ
V.S.W.R < 2.0
DC Voltage 2.2V to 5.0V
DC Current < 15mA

Mechanical:
Weight: <110gram
Cable: RG174 5 meter or other
Connector: SMA or SMA/SMB/SMC/BNC/FME/TNC/MCX /MMCX
Mounting: magnetic base or adhesive
Housing color: Black

Environmental:
Working Temp: -40oC~+85oC
Storage Temp: -45oC~+100oC
Vibration Sine sweep: 1g(0-p)10~50~10Hz each axis
Humidity Humidity: 95%~100% RH
Weatherproof: 100% Waterproof
Compatible GPS Devices:
All GPS receivers/systems with a SMA connector for external antennas.



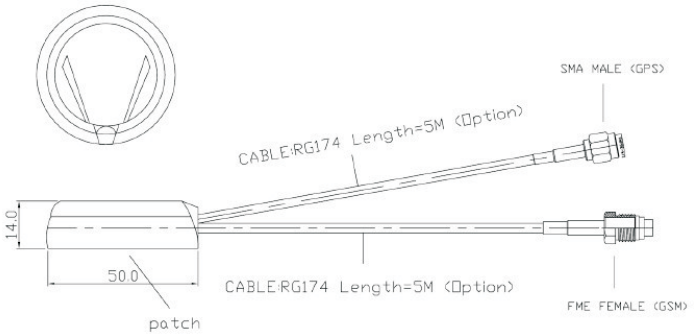

ORDER INFORMATION

Product No. : KLS1-GPS-02A-SMA-M-RG174-1000MM

Pos. NO.

Series NO.:02A(Size:50x14mm)
02B(Size:46x14 mm)

Connector Type:SMA,SMB,SMC,BNC
FME,TNC,MCX ,MMCX

F:Female Connector M:male Connector

Cable Type:RG174

Cable Length-1000mm,3000,5000 or other

GPS Antennas Series

KLS1-GPS-02 (Active Internal Antenna)

Specifications:

Dieletric Antenna:
Center Frequency 1575.42MHz±3 MHz
V.S.W.R 1.5:1
Band Width: ±5 MHz
Impendence: 50 ohm
Peak Gain > 3dBic Based on 7 x 7cm ground plane
Gain Coverage > -4dBic at -90° ~ +90°(over 75% Volume)
Polarization RHCP

LNA/Filter :
NA Gain (Without cable) 10 ~ 30 dB Typical
Noise Figure 1.5dB
Filter Out Band Attenuation (f0=1575.42 MHz)
7dB Min f0+/-20MHz ;
20dB Min f0+/-50MHz
30dB Min f0+/-100MHz
V.S.W.R < 2.0
DC Voltage 2.2V to 5.0V/other
DC Current: 5 ~ 15mA Max

Mechanical:
Weight < 80gram
Cable RF1.13 or other
Connector SMA/SMB-M/SMC/BNC/FME/TNC/MCX /MMCX or other (Default SMA)

Environmental:
Working Temp -40oC~+85oC
Storage Temp. -45oC~+100oC
Vibration Sine sweep 1g(0-p)10~50~10Hz each axis



ORDER INFORMATION

Product No. : KLS1-GPS-02A-SMA-M-RG174-1000MM

Pos. NO.

Series NO.:02A Size:13x13x6.5mm
02B Size:15x15x7.5mm
02C Size:18.6x18.6x7.5mm/02D

Connector Type:SMA,SMB,SMC,BNC
FME,TNC,MCX ,MMCX

F:Female Connector M:male Connector

Cable Type:RG174,OD1.13mm

Cable Length-1000mm,3000,5000 or other

GPS Antennas Series

KLS1-GPS-03 (Active Internal Antenna with switch)

Specifications:

Dieletric Antenna:

Center Frequency 1575.42MHz±3 MHz
V.S.W.R 1.5:1
Band Width: ±5 MHz
Impendence: 50 ohm
Peak Gain > 3dBic Based on 7 x 7cm ground plane
Gain Coverage > -4dBic at -90° ~ +90°(over 75% Volume)
Polarization RHCP

LNA/Filter :

NA Gain (Without cable) 10 ~ 30 dB Typical
Noise Figure 1.5dB
Filter Out Band Attenuation (f0=1575.42 MHz)
7dB Min f0+/-20MHz ;
20dB Min f0+/-50MHz
30dB Min f0+/-100MHz
V.S.W.R < 2.0
DC Voltage 2.2V to 5.0V/other
DC Current: 5 ~ 15mA Max

Mechanical:

Weight < 80gram
Size 37x37x5.5mm/37x37x7.5mm
Cable RF1.13 or other
Connector SMA/SMB-M/SMC/BNC/FME/TNC/MCX /MMCX or other (Default SMA)

Environmental:

Working Temp -40oC~+85oC
Storage Temp. -45oC~+100oC
Vibration Sine sweep 1g(0-p)10~50~10Hz each axis

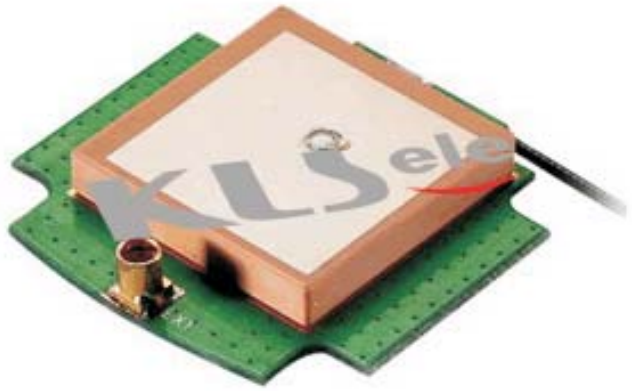

ORDER INFORMATION

Product No. : KLS1-GPS-03A-SMA-M-RG174-1000MM

Pos. NO.
Series NO.:03A Size:37x37x5.5mm
03B Size:37x37*7.5mm
03C Size:37x29x6mm
03D Size:37x29x8mm
Connector Type:SMA,SMB,SMC,BNC
FME,TNC,MCX ,MMCX
F:Female Connector M:male Connector
Cable Type:RG174,OD1.13mm
Cable Length-1000mm,3000,5000 or other

GPS Antennas Series

KLS1-GPS-04 (Dielectric Antenna)

Product Description:
Size 20x20x4mm
Center Frequency 1575.42 MHz±3 MHz
V.S.W.R 1.5 : 1
Band Width ±5 MHz
Impendence 50 ohm
Polarization Type RHCP
Working Temp -40℃~+85℃
Humidity 5%~75%RH
Waterproof IP67

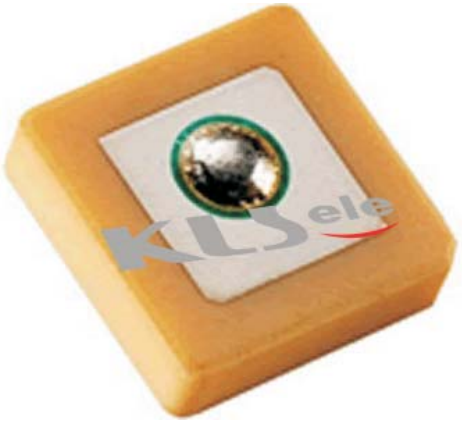

ORDER INFORMATION

Product No. : KLS1-GPS-04A

Pos. NO.

Series NO.: 04A Size:13x13x3.5mm
04B Size:15x15x4mm
04C Size:18x18x4mm
04D Size:20x20x4mm
04E Size:25x25x4mm

All specification & dimensions are subject to change, Please call your nearest KLS sales represesntative for update information

GPS Antennas Series

KLS1-GPS-05 (Passive Antenna)

Features
Compatible with all GPS devices/systems that apply passive antennas
Mount options: removable magnetic mount or adhesive mount (Default: magnetic mount)
Connector type options: straight or right angle BNC,TNC,MCX,MMCX,SMA,SMB-F,SMB-M,SMC,FAKRA,HRS GT5 etc.
(Default: straight SMA type)
Cable length options: maximal 2 meters (Defaut: 1 meter)

Specifications:

Dieletric Antenna:
Center Frequency: 1575.42MHz±3 MHz
V.S.W.R 1.5:1
Band Width: ±5 MHz
Impendence: 50 ohm
Peak Gain >3dBic Based on 7 x 7cm ground plane
Gain Coverage >-4dBic at -90° ~ +90° (over 75% Volume)
Polarization: RHCP

Mechanical:
Weight: <110gram
Cable: RG174 2 meter or other
Connector: your specification
Mounting: magnetic base or adhesive
Housing color: Black

Environmental:
Working Temp: -40oC~+85oC
Storage Temp: -45oC~+100oC
Vibration Sine sweep: 1g(0-p)10~50~10Hz each axis
Humidity Humidity: 55%~75% RH
Weatherproof: IP67
Compatible GPS Devices:
All GPS receivers/systems based on passive antenna designs.



For GPS system developers, we recommend to order and test few samples first before placing a quantity order.

ORDER INFORMATION

Product No. : KLS1-GPS-05-SMA-M-RG174-1000MM

Pos. NO.

Series NO.:05A(Size:40x39x14mm)
05B(Size:39x33x14 mm)

Connector Type:SMA,SMB,SMC,BNC
FME,TNC,MCX ,MMCX
F:Female Connector M:male Connector

Cable Type:RG174,RG316

Cable Length-1000mm,3000,5000 or other

Combo Antennas

KLS1-GPS+GSM-01 (GPS+GSM Antennas)

GPS antenna High performance GPS patch antenna with state-of-the-art low noise amplifier

Features:

*	GPS Active combined with GSM CDMA
*	Double-sided sticky which is easier for installation and portage usage.

GPS-Description:

*	Frequency: 1575.42MHz
*	Polarization: RHCP (right hand circular polarization)
*	Gain: 27dB typical
*	Noise figure: 1.5 max.
*	Attenuation: 20dB min. at F0 +/- 50MHz
*	Bandwidth: >10MHz
*	V.S.W.R: 2.0 max
*	Impedance: 50 ohms
*	Power consumption: 12.5mA (at 3.3V)
*	Cable and connector: 5m RG-174 with SMA connector
*	Operating temperature: -35 to +85 degrees Celsius Storage temperature: -40 to +95 degrees Celsius

GSM CDMA UMTS Description:

*	Proof antenna for 824-960/1710-2170MHz cellular phone
*	Frequency: 824-894/1710-2170MHz
*	Polarization: vertical
*	Gain: 2dBi
*	V.S.W.R: 2.0 max
*	Impedance: 50 ohms
*	Power handling capacity: 10W max
*	Cable and connector: 3m RG-174 with SMA connector
*	Operating temperature: -35 to +85 degrees Celsius
*	Storage temperature: -40 to +95 degrees Celsius



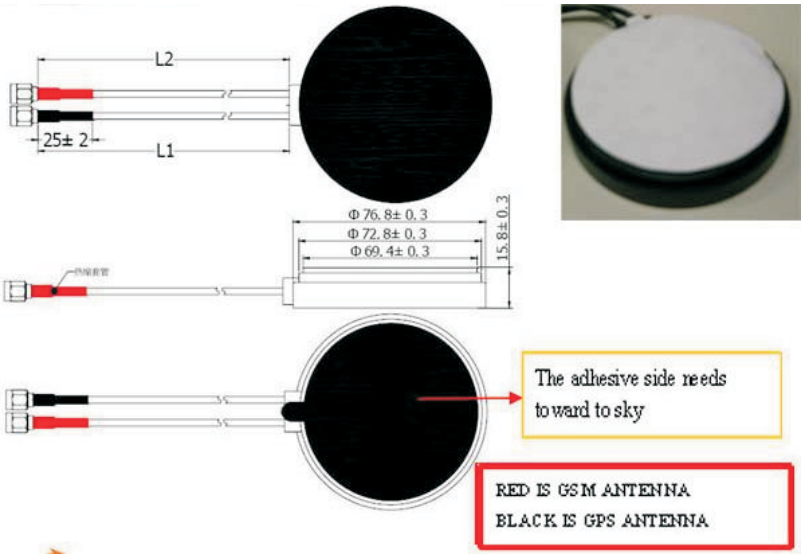

ORDER INFORMATION

Product No. : KLS1-GPS+GSM-01-SMA-F-RG174-1000MM

- **Pos. NO.**
- **Series NO.**
- **Connector Type: SMA/SMB/SMC/BNC/FME TNC/MCX /MMCX or other**
- **F:Female Connector M:male Connector**
- **Cable type:RG174, Rg316...**
- **Cable Length-1000mm,3000,5000 or other**

Combo Antennas

KLS1-GPS+GSM-02 (GPS+GSM Antennas)

GPS antenna High performance GPS patch antenna with state-of-the-art low noise amplifier

Features:

*	GPS Active combined with GSM or CDMA, PCS.
*	Screw type for installation

GPS-Description:

*	Frequency: 1575.42MHz
*	Polarization: RHCP (right hand circular polarization)
*	Gain: 27dB typical
*	Noise figure: 1.5 max.
*	Attenuation: 20dB min. at F0 +/- 50MHz
*	Bandwidth: 10MHz
*	V.S.W.R: 2.0 max
*	Impedance: 50 ohms
*	Power consumption: 2.7 to 5.5VDC/28mA
*	Cable and connector: 5m RG-174 with SMA connector
*	Operating temperature: -35 to +85 degrees Celsius Storage temperature: -40 to +95 degrees Celsius

GSM (PCS,CDMA) Description

*	Proof antenna for 900/1800MHz(800/1900) cellular phone
*	Frequency: 900 to 1800MHz (800/1900)
*	Polarization: vertical
*	Gain: 0dBi
*	V.S.W.R: 2.0 max
*	Impedance: 50 ohms
*	Power handling capacity: 10W max
*	Cable and connector: 3m RG-174 with FME connector
*	Operating temperature: -35 to +85 degrees Celsius
*	Storage temperature: -40 to +95 degrees Celsius



ORDER INFORMATION

Product No. : KLS1-GPS+GSM-02-SMA-F-FME-RG174-1000MM

Pos. NO.

Series NO.

Connector Type: SMA/SMB/SMC/BNC/FME TNC/MCX /MMCX or other

F:Female Connector M:male Connector

Cable type:RG174, Rg316...

Cable Length-1000mm,3000,5000 or other

Combo Antennas

KLS1-GPS+GSM-03 (GPS+GSM Antennas)

GPS antenna High performance GPS roof screw type antenna with state-of-the-art low noise amplifier.

Features:

*	GPS Active combined with GSM or CDMA, PCS.
*	Screw type for installation

GPS-Description:

*	Frequency: 1575.42MHz
*	Polarization: RHCP (right hand circular polarization)
*	Gain: 27dB typical
*	Noise figure: 1.5 max.
*	Attenuation: 20dB min. at F0 +/- 50MHz
*	Bandwidth: 10MHz
*	V.S.W.R: 2.0 max
*	Impedance: 50 ohms
*	Power consumption: 2.7 to 5.5VDC/28mA
*	Cable and connector: 5m RG-174 with SMA connector
*	Operating temperature: -35 to +85 degrees Celsius Storage temperature: -40 to +95 degrees Celsius

GSM (PCS,CDMA) Description

*	Proof antenna for 900/1800MHz(800/1900) cellular phone
*	Frequency: 900 to 1800MHz (800/1900)
*	Polarization: vertical
*	Gain: 0dBi
*	V.S.W.R: 2.0 max
*	Impedance: 50 ohms
*	Power handling capacity: 10W max
*	Cable and connector: 3m RG-174 with FME connector
*	Operating temperature: -35 to +85 degrees Celsius
*	Storage temperature: -40 to +95 degrees Celsius



ORDER INFORMATION

Product No. : KLS1-GPS+GSM-03-SMA-F-FME-RG174-1000MM

- **Pos. NO.**
- **Series NO.**
- **Connector Type: SMA/SMB/SMC/BNC/FME TNC/MCX /MMCX or other**
- **F:Female Connector M:male Connector**
- **Cable type:RG174, Rg316...**
- **Cable Length-1000mm,3000,5000 or other**

Combo Antennas

KLS1-GPS+GSM-04 (GPS+GSM Antennas)

GPS antenna High performance GPS roof screw type antenna with state-of-the-art low noise amplifier.

Features:

*	GPS Active combined with GSM or CDMA, PCS.
*	Screw type for installation

GPS-Description:

*	Frequency: 1575.42MHz
*	Polarization: RHCP (right hand circular polarization)
*	Gain: 27dB typical
*	Noise figure: 1.5 max.
*	Attenuation: 20dB min. at F0 +/- 50MHz
*	Bandwidth: 10MHz
*	V.S.W.R: 2.0 max
*	Impedance: 50 ohms
*	Power consumption: 2.7 to 5.5VDC/28mA
*	Cable and connector: 5m RG-174 with SMA connector
*	Operating temperature: -35 to +85 degrees Celsius Storage temperature: -40 to +95 degrees Celsius

GSM (PCS,CDMA) Description

*	Proof antenna for 900/1800MHz(800/1900) cellular phone
*	Frequency: 900 to 1800MHz (800/1900)
*	Polarization: vertical
*	Gain: 0dBi
*	V.S.W.R: 2.0 max
*	Impedance: 50 ohms
*	Power handling capacity: 10W max
*	Cable and connector: 3m RG-174 with FME connector
*	Operating temperature: -35 to +85 degrees Celsius
*	Storage temperature: -40 to +95 degrees Celsius



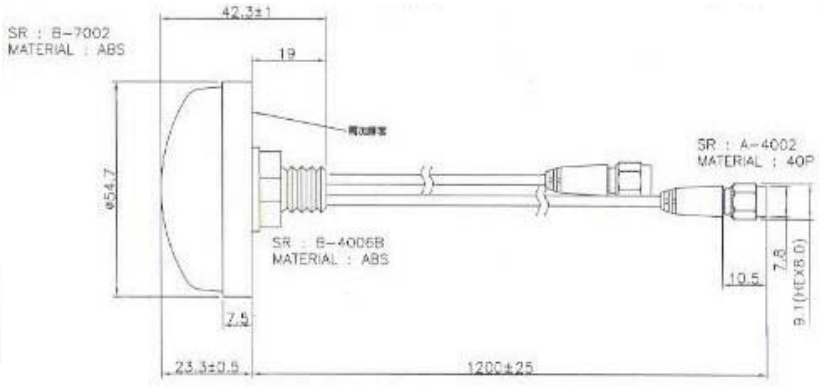

ORDER INFORMATION

Product No. : KLS1-GPS+GSM-04-SMA-F-RG174-1000MM

Pos. NO.
Series NO.
Connector Type: SMA/SMB/SMC/BNC/FME
TNC/MCX /MMCX or other
F:Female Connector M:male Connector
Cable type:RG174, Rg316...
Cable Length-1000mm,3000,5000 or other

Combo Antennas

KLS1-GPS+GSM-05 (GPS+GSM Antennas)

GPS antenna High performance GPS roof screw type antenna with state-of-the-art low noise amplifier.

Features:

*	GPS Active combined with GSM or CDMA, PCS.
*	Screw type for installation

GPS-Description:

*	Frequency: 1575.42MHz
*	Polarization: RHCP (right hand circular polarization)
*	Gain: 27dB typical
*	Noise figure: 1.5 max.
*	Attenuation: 20dB min. at F0 +/- 50MHz
*	Bandwidth: 10MHz
*	V.S.W.R: 2.0 max
*	Impedance: 50 ohms
*	Power consumption: 2.7 to 5.5VDC/28mA
*	Cable and connector: 5m RG-174 with SMA connector
*	Operating temperature: -35 to +85 degrees Celsius Storage temperature: -40 to +95 degrees Celsius

GSM (PCS,CDMA) Description

*	Proof antenna for 900/1800MHz(800/1900) cellular phone
*	Frequency: 900 to 1800MHz (800/1900)
*	Polarization: vertical
*	Gain: 0dBi
*	V.S.W.R: 2.0 max
*	Impedance: 50 ohms
*	Power handling capacity: 10W max
*	Cable and connector: 3m RG-174 with FME connector
*	Operating temperature: -35 to +85 degrees Celsius
*	Storage temperature: -40 to +95 degrees Celsius



ORDER INFORMATION

Product No. : KLS1-GPS+GSM-05-SMA-F-RG174-1000MM

- **Pos. NO.**
- **Series NO.**
- **Connector Type: SMA/SMB/SMC/BNC/FME TNC/MCX /MMCX or other**
- **F:Female Connector M:male Connector**
- **Cable type:RG174, Rg316...**
- **Cable Length-1000mm,3000,5000 or other**

Combo Antennas

KLS1-GPS+GSM+UHF-01 (GPS+GSM+UF Antennas)

1. Features: GPS active combined with GSM (or CDMA) and UHF 380-475MHz (or Wi-Fi 2.4GHz)
2. Screw type for installation

GPS description:
Frequency: 1575.42MHz
Polarization: RHCP (right hand circular polarization)
Gain: 27dB typical
Noise figure: 1.5 maximum
Attenuation: 20dB minimum at F0 +/- 50MHz
Bandwidth: 10MHz
V.S.W.R: 2.0 maximum
Impedance: 50£[
Power consumption: 2.7 to 5.5VDC/28mA
Cable and connector: optional

GSM (PCS/CDMA) description:
Proof antenna for 900 and 1800MHz (800/1900) cellular phone
Frequency: 900 to 1800MHz (800/1900)
Polarization: vertical
Gain: 0dBi
V.S.W.R: 2.0 maximum
Impedance: 50£[
Power handling capacity: 10W maximum
Cable and connector: optional

UHF description (or WLAN 2.4GHz)
Frequency: 380 to 470MHz (or 2.4GHz)
Cable and connector: optional
With RoHS Compliant
Made in Taiwan



ORDER INFORMATION

Product No. : KLS1-GPS+GSM+UHF-01-RG174-1000MM

- **Pos. NO.**
- **Series NO.**
- **Cable type:RG174, Rg316...**
- **Cable Length-1000mm,3000,5000 or other**

Combo Antennas

KLS1-GPS+RADIO+WIFI-01 (GPS+RADIO+WIFI Antennas)

Frequency : 1575.42MHz
824 MHz ~ 894 MHz,890~960 MHz
1710~1890 MHz,1850 ~ 1990 MHz
2400~2483(ISM 2.4GMHz),2.1G
Gain : GPS:27 dB
1.7dBi
VSWR : <2.0:1
Dimension : 63 (Dia.) x 15.6 (H) mm
Mounting : Magnetic Mount



ORDER INFORMATION

Product No. : KLS1-GPS+RADIO+WIFI-01

Pos. NO.

Series NO.

KLS

1-Connectors & Connector Components-Разъемы, соединители и их узлы

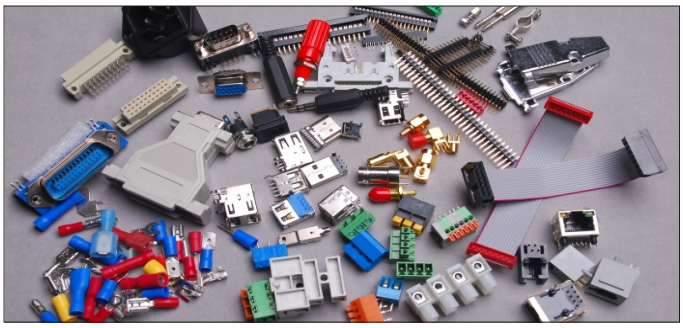

1-1 Wire to Board connectors
1-2 Board to Board connectors
1-3 Input/Output (Box to Box)
1-4 Socket & Card connectors
1-5 Power connectors
1-6 Audio & Video connectors
1-7 RF & Coax
1-8 **Terminal Blocks & Strips**
1-9 Terminals & Splices

More . . .

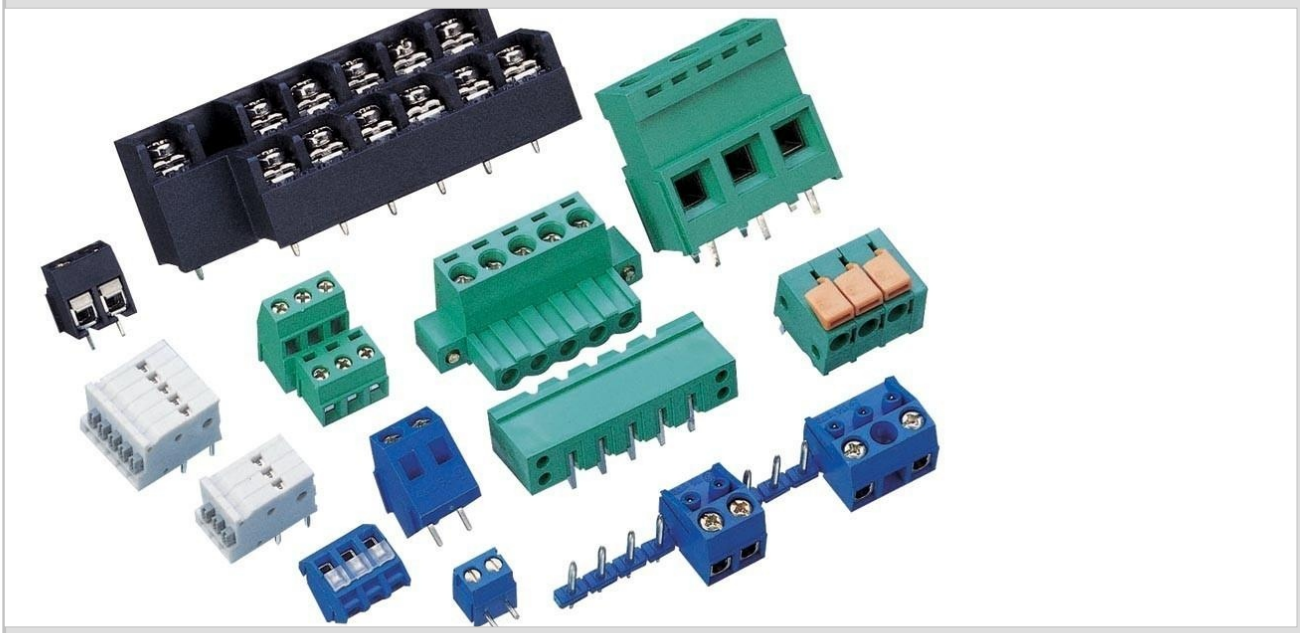

KLS ELECTRONIC CO; LTD. WWW.CNKLS.COM Email:sales@cnkls.com
Tel:0086 574 86824882 Fax:0086 574 86824882

PCB Series

KLS2-350-3.50/3.96 Series Pitch=3.50mm/3.96mm

Electrical :

Rated voltage: 300V
Rated current: 10A
Contact resistance: 20mΩ
Insulation resistance: 5000MΩ/1000V
Withstanding Voltage: AC1500V/1Min
Wire range: 24-18AWG 2.5mm²

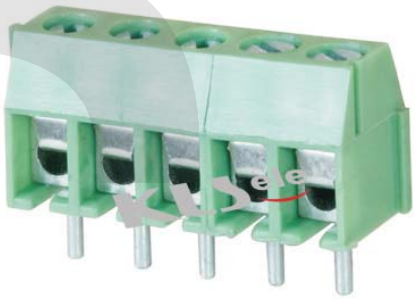

Material

Screws: M2.5 steel Zinc plated
Wire guard: phosphor bronze Ni plated or stainless steel
Pin header: Brass, Tin plated
Housing: PA66, UL94V-0

Mechanical

Temp. Range: -30°C~+120°C
MAX Soldering: +250°C for 5 Sec.
Torque: 0.5Nm (4.5lb.in)
Strip length: 4.5-5mm

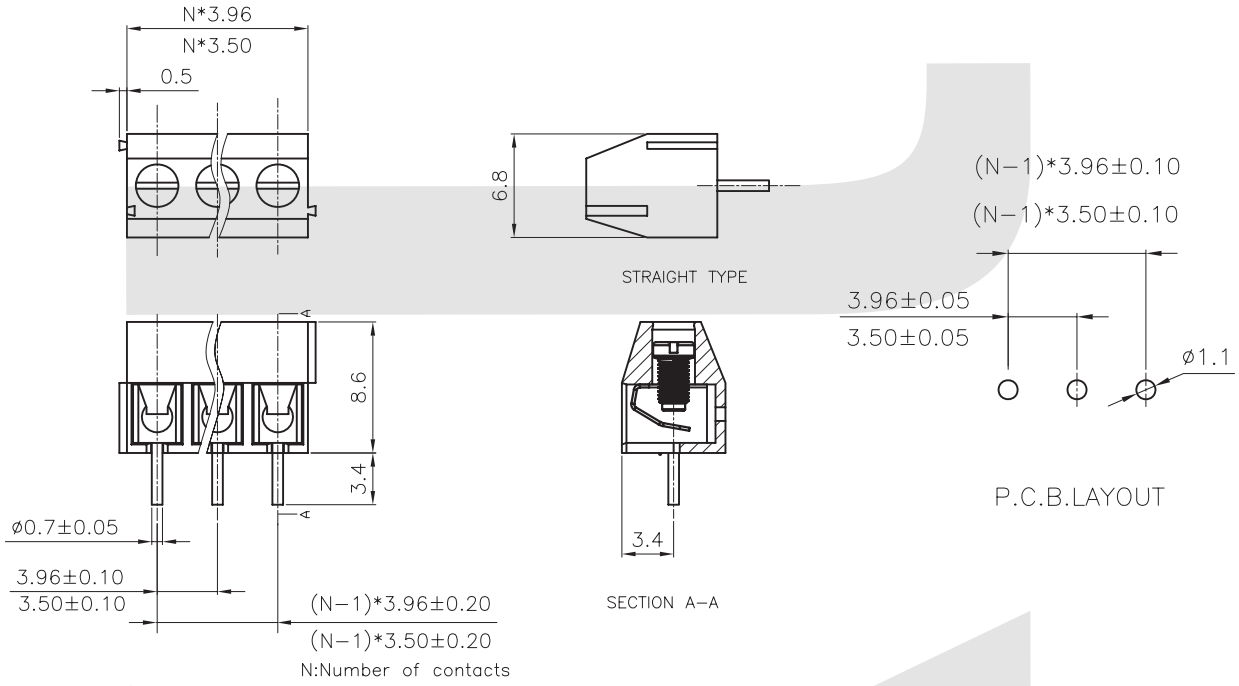

ORDER INFORMATION

Product NO.: KLS2-350-3.50-XXP X X X

- Pos. NO.
- Series No.
- Pitch: 3.50=3.50mm 3.96=3.96mm
- Number of Pole
- Customer Request
- Screw: C=Cross Screw S=Slot Screw
- Color: 1=Gray 2=Blue 3=Black 4=Green 5=Orange 6=Red 7=Transparent 8=Yellow 9=White

PCB Series

KLS2-350R-3.50/3.96 Series Pitch=3.50mm/3.96mm

Electrical :

Rated voltage: 300V
Rated current: 10A
Contact resistance: 20mΩ
Insulation resistance: 5000MΩ/1000V
Withstanding Voltage: AC1500V/1Min
Wire range: 24-18AWG 2.5mm²



Material

Screws: M2.5 steel Zinc plated
Wire guard: phosphor bronze Ni plated or stainless steel
Pin header: Brass, Tin plated
Housing: PA66, UL94V-0

Mechanical

Temp. Range: -30°C~+120°C
MAX Soldering: +250°C for 5 Sec.
Torque: 0.5Nm (4.5lb.in)
Strip length: 4.5-5mm

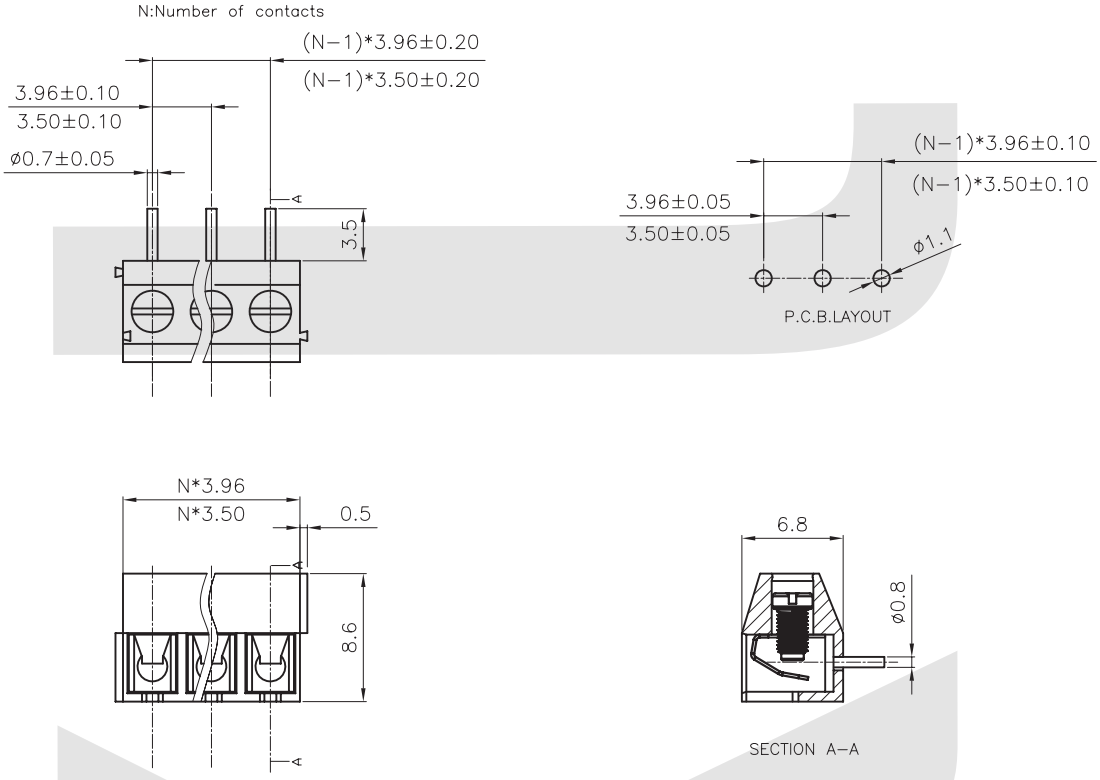

ORDER INFORMATION

Product NO.: KLS2-350R-3.50-XXP X X X

- Pos. NO.
- Series No.
- Pitch: 3.50=3.50mm 3.96=3.96mm
- Number of Pole
- Customer Request
- Screw: C=Cross Screw S=Slot Screw
- Color: 1=Gray 2=Blue 3=Black 4=Green 5=Orange 6=Red 7=Transparent 8=Yellow 9=White

PCB Series

KLS2-332K-5.00 Series Pitch=5.00mm/10.00mm

Electrical :

Rated voltage: 300V
Rated current: 16A
Contact resistance: 20mΩ
Insulation resistance: 5000MΩ/1000V
Withstanding Voltage: AC1500V/1Min
Wire range: 22-14AWG 2.5mm²



Material

Screws: M2.5 steel Zinc plated
Wire guard: phosphor bronze Ni plated or stainless steel
Housing: PBT,UL94V-0

Mechanical

Temp. Range: -40°C~+105°C
MAX Soldering: +250°C for 5 Sec.
Torque: 0.4Nm (3.6lb.in)
Strip length: 4.5-5mm

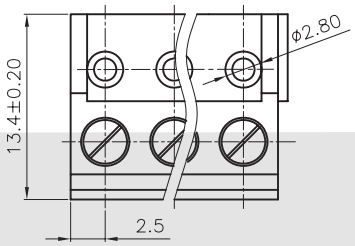

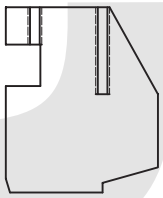

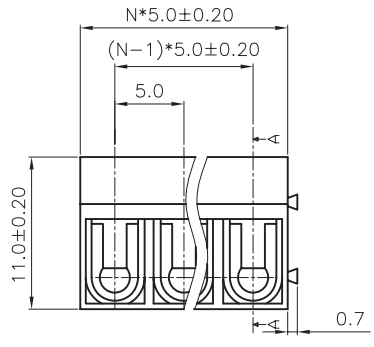

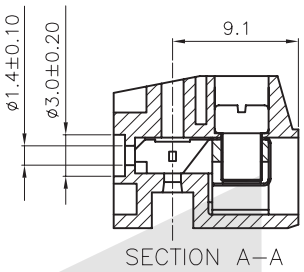

ORDER INFORMATION

Product NO.: KLS2-332K-5.00-XXP X X X

- Pos. NO.
- Series No.
- Pitch: 5.00=5.00mm, 10.00=10.00mm
- Number of Pole
- Customer Request
- Screw: C=Cross Screw, S=Slot Screw
- Color: 1=Gray, 2=Blue, 3=Black, 4=Green, 5=Orange, 6=Red, 7=Transparent, 8=Yellow, 9=White

PCB Series

KLS2-332J-5.00 Series Pitch=5.00mm/10.00mm

Electrical :

Rated voltage: 300V
Rated current: 10A
Contact resistance: 20mΩ
Insulation resistance: 5000MΩ/1000V
Withstanding Voltage: AC1500V/1Min
Wire range: 22-14AWG 2.5mm²



Material

Pin header: Brass, Tin plated
Housing: PBT,UL94V-0

Mechanical

Temp. Range: -30ºC~+105ºC
MAX Soldering: +250ºC for 5 Sec.
Torque: 0.4Nm (3.6lb.in)
Strip length: 4.5-5mm

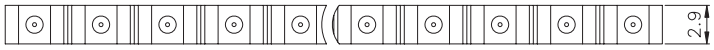

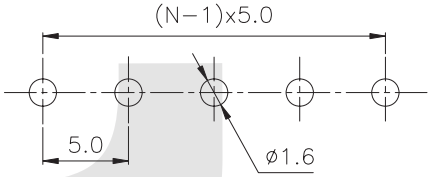

RECOMMEND PCB LAYOUT
(TOLERANCE=±0.05)

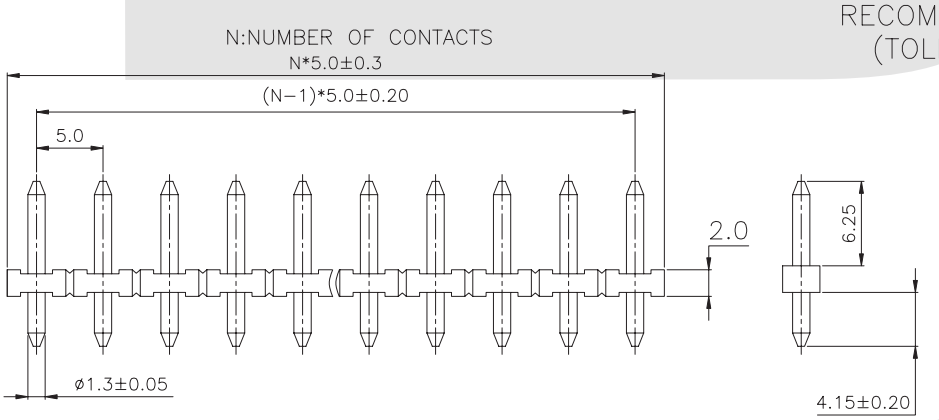

ORDER INFORMATION

Product NO.: KLS2-332J-5.00-XXP X X

- Pos. NO.
- Series No.
- Pitch: 5.00=5.00mm, 10.00=10.00mm
- Number of Pole
- Customer Request
- Color: 1=Gray 2=Blue 3=Black 4=Green 5=Orange 6=Red 7=Transparent 8=Yellow 9=White

PCB Series

KLS2-125-3.50/3.81 Series Pitch=3.50mm/3.81mm

Electrical :

Rated voltage: 300V
Rated current: 10A
Contact resistance: 20mΩ
Insulation resistance: 5000MΩ/1000V
Withstanding Voltage: AC1500V/1Min
Wire range: 24-12AWG 1.5mm²



Material

Screws: M2 steel Zinc plated
Contact: Brass
Pin header: Brass, Tin plated
Housing: PA66, UL94V-0

Mechanical

Temp. Range: -40°C~+105°C
MAX Soldering: +250°C for 5 Sec.
Torque: 0.2Nm (1.8lb.in)
Strip length: 5-6mm

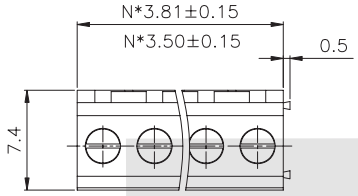

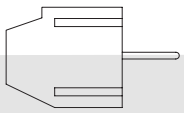

STRAIGHT TYPE

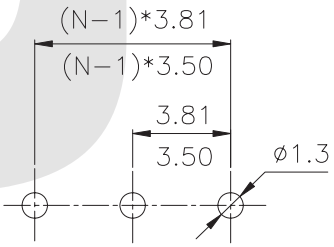

RECOMMEND PCB LAYOUT
(TOLERANCE=±0.05)

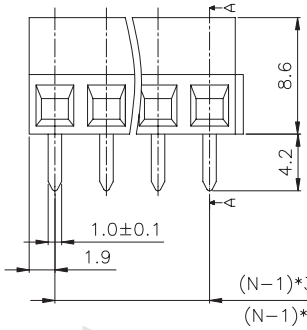

N=Number of contacts

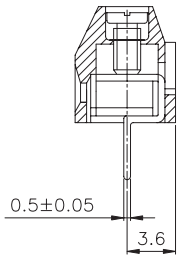

SECTION A−A

ORDER INFORMATION

Product NO.: KLS2-125-3.50-XXP X X X

- Pos. NO.
- Series No.
- Pitch: 3.50=3.50mm 3.81=3.81mm
- Number of Pole
- Customer Request
- Screw: C=Cross Screw S=Slot Screw
- Color: 1=Gray 2=Blue 3=Black 4=Green 5=Orange 6=Red 7=Transparent 8=Yellow 9=White

PCB Series

KLS2-125H-3.50/3.81 Series Pitch=3.50mm/3.81mm

Electrical :

Rated voltage: 150V
Rated current: 10A
Contact resistance: 20mΩ
Insulation resistance: 5000MΩ/1000V
Withstanding Voltage: AC2000V/1Min
Wire range: 26-16AWG 1.5mm²



Material

Screws: M2 steel Zinc plated
Contact:Brass, Ni plated
Pin header: Brass, Tin plated
Housing: PA66, UL94V-0

Mechanical

Temp. Range:-40°C~+105°C
MAX Soldering: +250°C for 5 Sec.
Torque: 0.2Nm (1.7 lb.in)
Strip length: 5-6mm

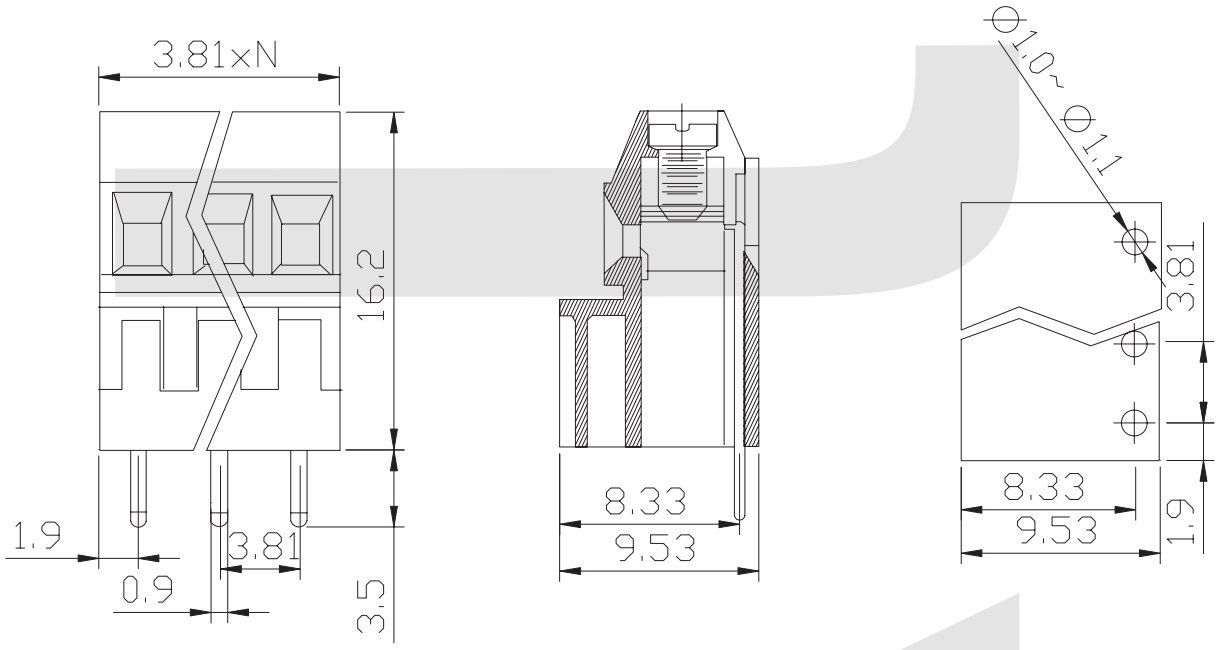

ORDER INFORMATION

Product NO.: KLS2-125H-3.81-XXP X X X

- Pos. NO.
- Series No.
- Pitch: 3.50=3.50mm, 3.81=3.81mm
- Number of Pole
- Customer Request
- Screw: C=Cross Screw, S=Slot Screw
- Color: 1=Gray, 2=Blue, 3=Black, 4=Green, 5=Orange, 6=Red, 7=Transparent, 8=Yellow, 9=White

PCB Series

KLS2-125A-3.50/3.81 Series Pitch=3.50mm/3.81mm

Electrical :

Rated voltage: 150V
Rated current: 10A
Contact resistance: 20mΩ
Insulation resistance: 5000MΩ/1000V
Withstanding Voltage: AC2000V/1Min
Wire range: 26-16AWG 1.5mm²

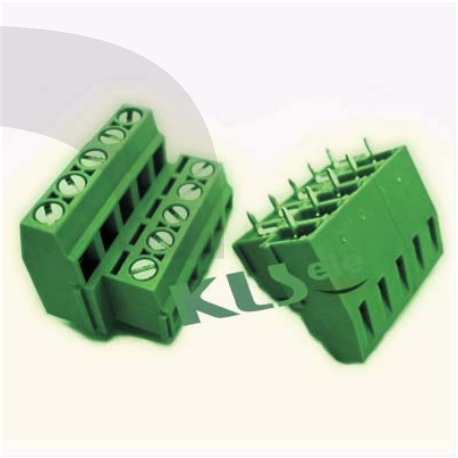

Material

Screws: M2 steel Zinc plated
Contact:Brass, Ni plated
Pin header: Brass, Tin plated
Housing: PA66, UL94V-0

Mechanical

Temp. Range:-40°C~+105°C
MAX Soldering: +250°C for 5 Sec.
Torque: 0.2Nm (1.7 lb.in)
Strip length: 5-6mm

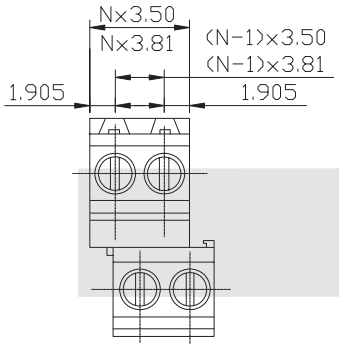

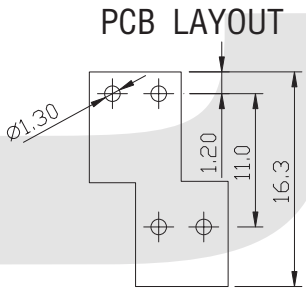

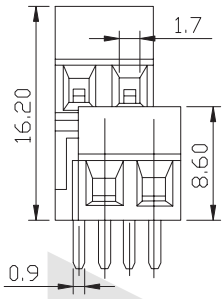

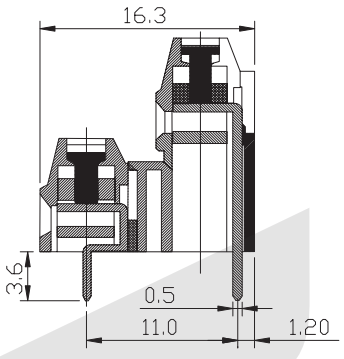

ORDER INFORMATION

Product NO.: KLS2-125A-3.81-XXP X X X

- Pos. NO.
- Series No.
- Pitch: 3.50=3.50mm, 3.81=3.81mm
- Number of Pole
- Customer Request
- Screw: C=Cross Screw, S=Slot Screw
- Color: 1=Gray, 2=Blue, 3=Black, 4=Green, 5=Orange, 6=Red, 7=Transparent, 8=Yellow, 9=White

PCB Series

KLS2-125B-3.50/3.81 Series Pitch=3.50mm/3.81mm

Electrical :

Rated voltage: 150V
Rated current: 10A
Contact resistance: 20mΩ
Insulation resistance: 5000MΩ/1000V
Withstanding Voltage: AC2000V/1Min
Wire range: 26-16AWG 1.5mm²



Material

Screws: M2 steel Zinc plated
Contact:Brass, Ni plated
Pin header: Brass, Tin plated
Housing: PA66, UL94V-0

Mechanical

Temp. Range:-40°C~+105°C
MAX Soldering: +250°C for 5 Sec.
Torque: 0.2Nm (1.7 lb.in)
Strip length: 5-6mm

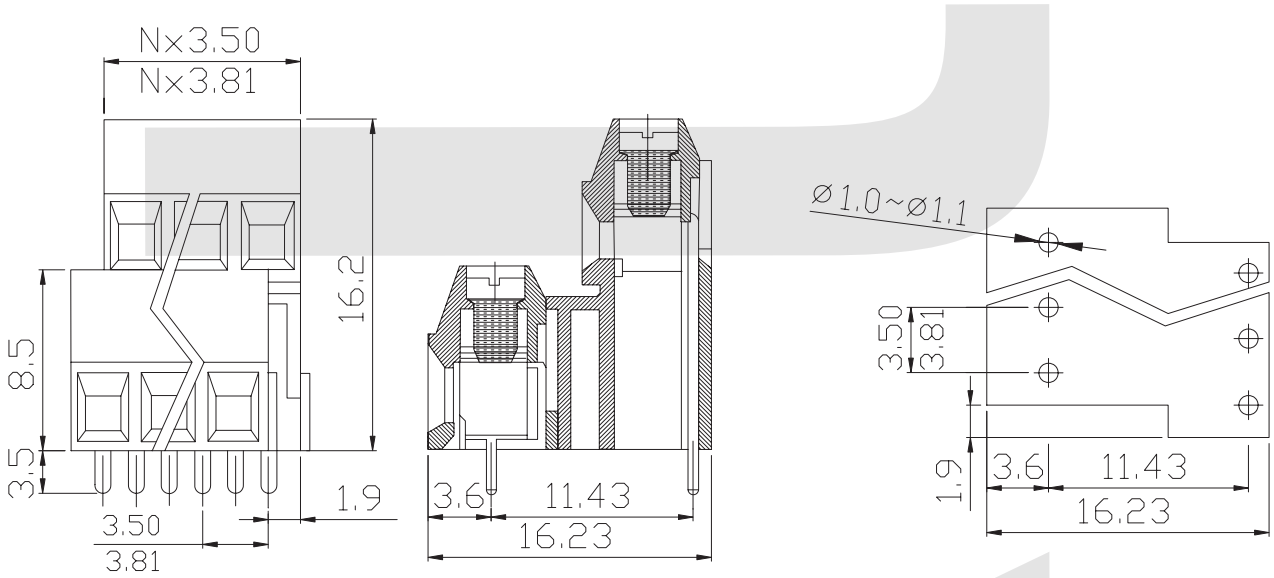

ORDER INFORMATION

Product NO.: KLS2-125B-3.81-XXP X X X

- Pos. NO.
- Series No.
- Pitch: 3.50=3.50mm, 3.81=3.81mm
- Number of Pole
- Customer Request
- Screw: C=Cross Screw, S=Slot Screw
- Color: 1=Gray, 2=Blue, 3=Black, 4=Green, 5=Orange, 6=Red, 7=Transparent, 8=Yellow, 9=White

PCB Series

KLS2-308V-2.54 Series Pitch=2.54mm

Electrical :

Rated voltage: 300V
Rated current:6A
Contact resistance: 20mΩ
Insulation resistance: 5000MΩ/1000V
Withstanding Voltage: AC2000V/1Min
Wire range: 26-18AWG 1.0mm²



Material

Screws: M1.5 steel Zinc plated
Contact:Brass,Electroless nickel
Pin header: Brass, Tin plated
Housing: PA66, UL94V-0

Mechanical

Temp. Range:-40°C~+105°C
MAX Soldering: +250°C for 5 Sec.
Torque: 0.15Nm (1.3 lb.in)
Strip length: 3.7-4.7mm

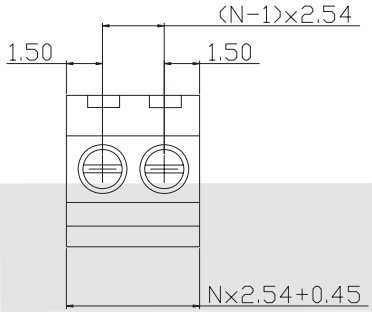

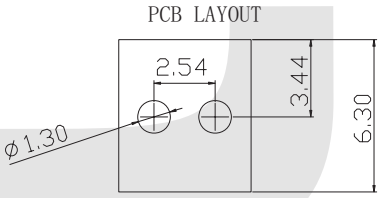

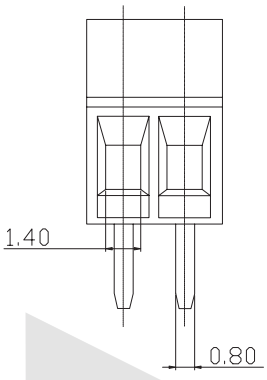

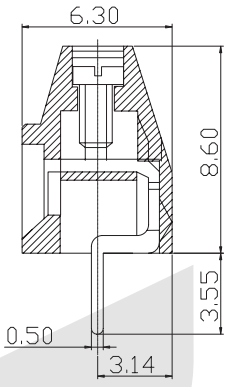

ORDER INFORMATION

Product No.: KLS2-308V-2.54-XXP-X X-X

- Pos. No.
- Series No.
- Pitch: 2.54=2.54mm
- Number of Pole
- Customer Request
- Screw: C=Cross Screw, S=Slot Screw
- Color: 1=Gray, 2=Blue, 3=Black, 4=Green, 5=Orange, 6=Red, 7=Transparent, 8=Yellow, 9=White

PCB Series

KLS2-300-5.00 Series Pitch=5.00mm/10.00mm

Electrical :

Rated Voltage: 300V
Rated Current: 16A
Contact Resistance: 20mΩ
Insulation Resistance: 5000MΩ/1000V
Withstanding Voltage: AC1500V/1Min
Wire Range: 22-14AWG 2.5mm²

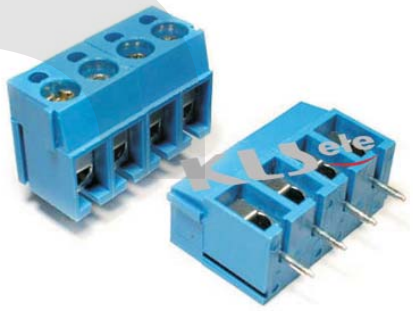

Material

Screws: M3 steel Zinc plated
Wire guard: phosphor bronze Ni plated or stainless steel
Pin header: Brass, Tin plated
Housing: PBT,UL94V-0

Mechanical

Temp. Range: -30°C~+120°C
MAX Soldering: ++250°C for 5 Sec.
Torque: 0.5Nm (4.5lb.in)
Strip length: 4.5-5mm

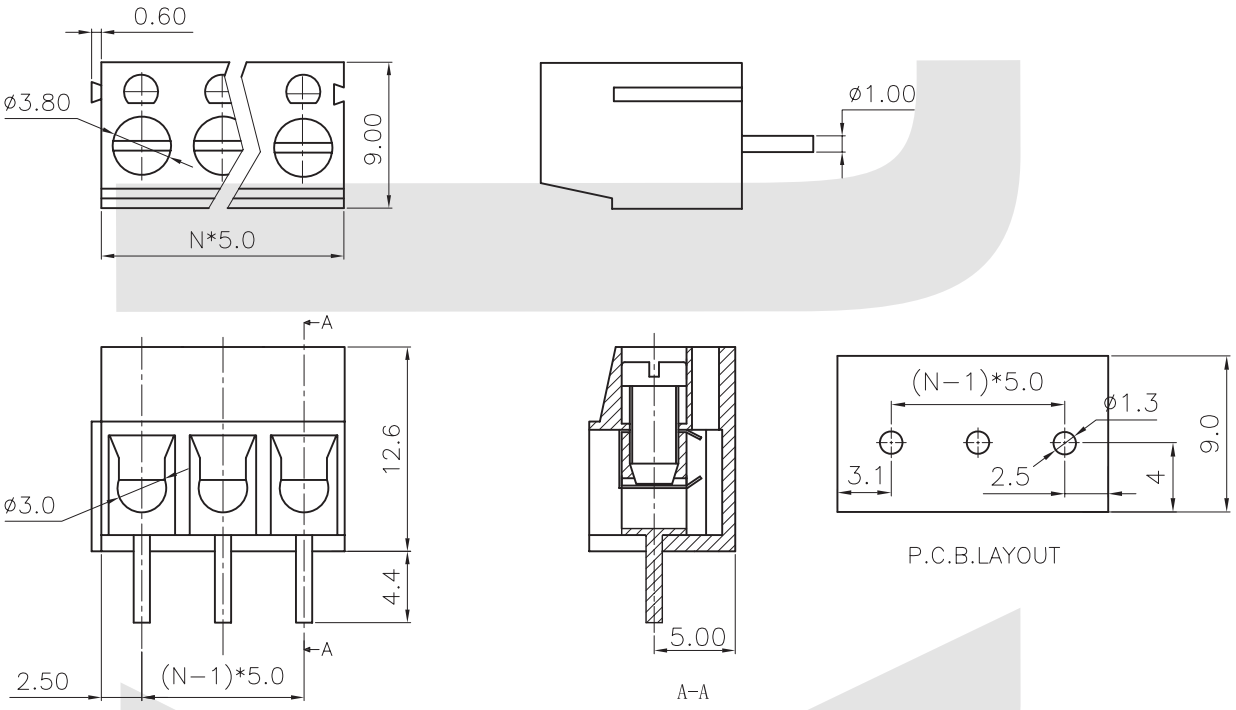

ORDER INFORMATION

Product NO.: KLS2-300-5.00-XXP X X X

- Pos. NO.
- Series No.
- Pitch: 5.00=5.00mm, 10.00=10.00mm
- Number of Pole
- Customer Request
- Screw: C=Cross Screw, S=Slot Screw
- Color: 1=Gray, 2=Blue, 3=Black, 4=Green, 5=Orange, 6=Red, 7=Transparent, 8=Yellow, 9=White

PCB Series

KLS2-300R-5.00 Series Pitch=5.00mm/10.00mm

Electrical :

Rated voltage: 300V
Rated current: 16A
Contact resistance: 20mΩ
Insulation resistance: 5000MΩ/1000V
Withstanding Voltage: AC1500V/1Min
Wire range: 22-14AWG 2.5mm²



Material

Screws: M3 steel Zinc plated
Wire guard: phosphor bronze Ni plated or stainless steel
Pin header: Brass, Tin plated
Housing: PBT,UL94V-0

Mechanical

Temp. Range: -30°C~+120°C
MAX Soldering: ++250°C for 5 Sec.
Torque: 0.5Nm (4.5lb.in)
Strip length: 4.5-5mm

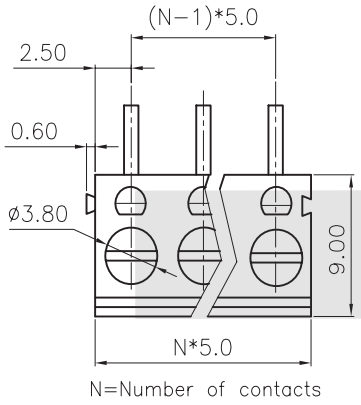

N=Number of contacts

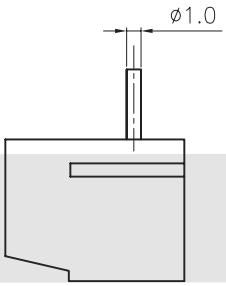

RIGHT ANGLE TYPE

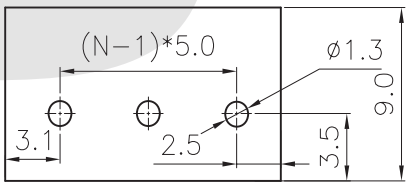

RECOMMEND PCB LAYOUT
(TOLERANCE=±0.05)

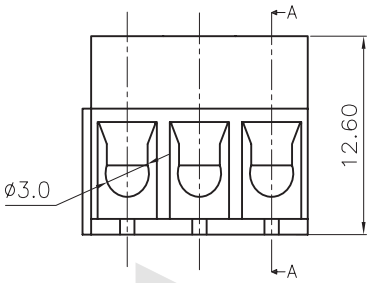

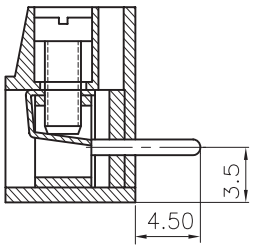

SFCTION A A

ORDER INFORMATION

Product NO.: KLS2-300R-5.00-XXP X X X

- Pos. NO.
- Series No.
- Pitch: 5.00=5.00mm, 10.00=10.00mm
- Number of Pole
- Customer Request
- Screw: C=Cross Screw, S=Slot Screw
- Color: 1=Gray, 2=Blue, 3=Black, 4=Green, 5=Orange, 6=Red, 7=Transparent, 8=Yellow, 9=White

PCB Series

KLS2-301-5.00 Series Pitch=5.00mm/10.00mm

Electrical :

Rated voltage: 300V
Rated current: 16A
Contact resistance: 20mΩ
Insulation resistance: 5000MΩ/1000V
Withstanding Voltage: AC1500V/1Min
Wire range: 22-14AWG 2.5mm²



Material

Screws: M3 steel Zinc plated
Wire guard: phosphor bronze Ni plated or stainless steel
Pin header: Brass, Tin plated
Housing: PBT,UL94V-0

Mechanical

Temp. Range: -30°C~+120°C
MAX Soldering: +250°C for 5 Sec.
Torque: 0.5Nm (4.5lb.in)
Strip length: 4.5-5mm

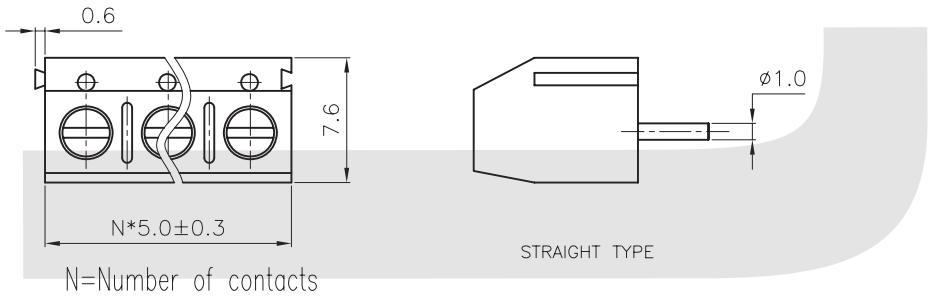

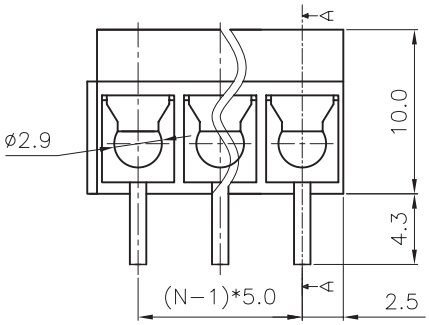

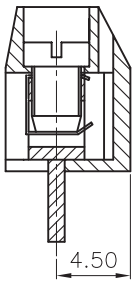

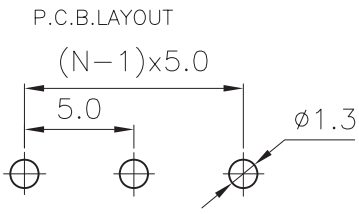

ORDER INFORMATION

Product NO.: KLS2-301-5.00-XXP X X X

- Pos. NO.
- Series No.
- Pitch: 5.00=5.00mm, 10.00=10.00mm
- Number of Pole
- Customer Request
- Screw: C=Cross Screw, S=Slot Screw
- Color: 1=Gray, 2=Blue, 3=Black, 4=Green, 5=Orange, 6=Red, 7=Transparent, 8=Yellow, 9=White

PCB Series

KLS2-301R-5.00 Series Pitch=5.00mm

Electrical :

Rated voltage: 300V
Rated current: 16A
Contact resistance: 20mΩ
Insulation resistance: 5000MΩ/1000V
Withstanding Voltage: AC1500V/1Min
Wire range: 22-14AWG 2.5mm²

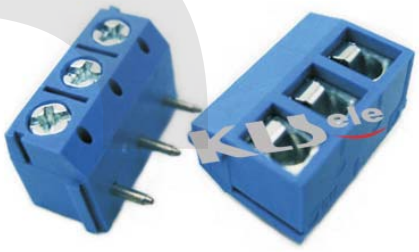

Material

Screws: M3 steel Zinc plated
Wire guard: phosphor bronze Ni plated or stainless steel
Pin header: Brass, Tin plated
Housing: PBT,UL94V-0

Mechanical

Temp. Range: -30°C~+120°C
MAX Soldering: +250°C for 5 Sec.
Torque: 0.5Nm (4.5lb.in)
Strip length: 4.5-5mm

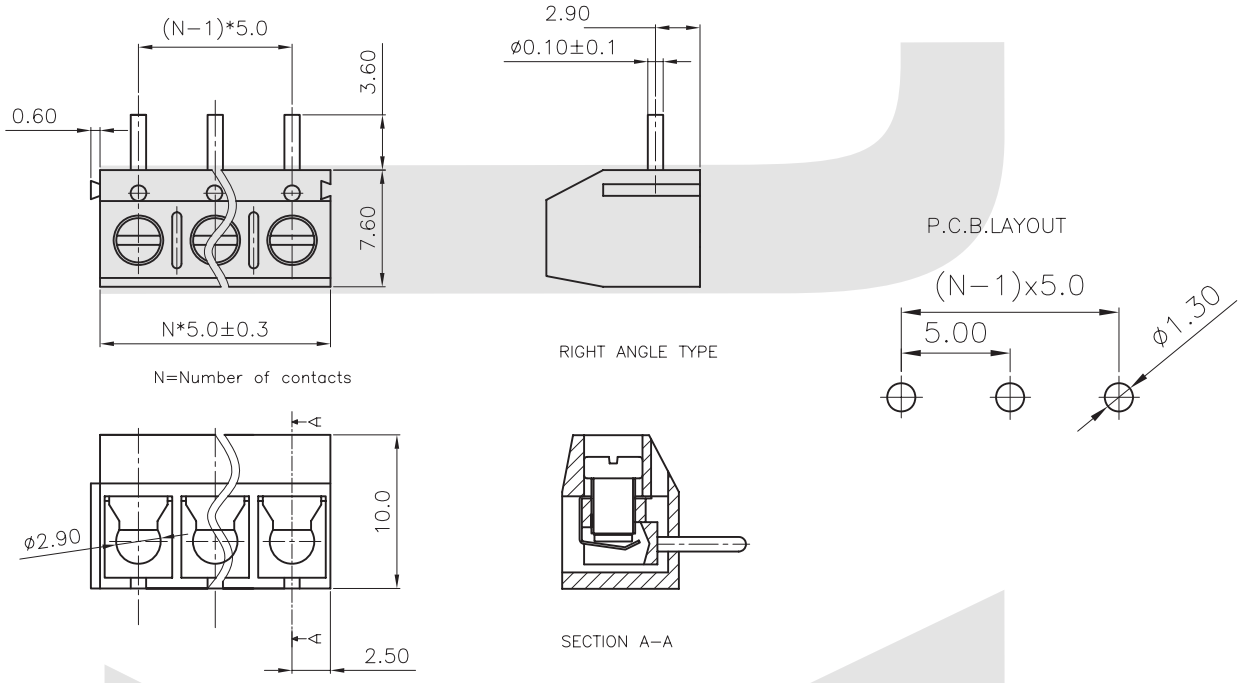

ORDER INFORMATION

Product NO.: KLS2-301R-5.00-XXP X X X

- Pos. NO.
- Series No.
- Pitch: 5.00=5.00mm, 10.00=10.00mm
- Number of Pole
- Customer Request
- Screw: C=Cross Screw, S=Slot Screw
- Color: 1=Gray, 2=Blue, 3=Black, 4=Green, 5=Orange, 6=Red, 7=Transparent, 8=Yellow, 9=White

PCB Series

KLS2-305V-5.00 Series Pitch=5.00mm/10.00mm

Electrical :

Rated voltage: 300V
Rated current: 10A
Contact resistance: 20mΩ
Insulation resistance: 5000MΩ/1000V
Withstanding Voltage: AC1500V/1Min
Wire range: 22-14AWG 2.5mm²



Material

Screws: M2.5 steel Zinc plated
Wire guard: phosphor bronze Ni plated or stainless steel
Pin header: Brass, Tin plated
Housing: PBT,UL94V-0

Mechanical

Temp. Range: -30°C~+120°C
MAX Soldering: +250°C for 5 Sec.
Torque: 0.4Nm (3.6lb.in)
Strip length: 4.5-5mm

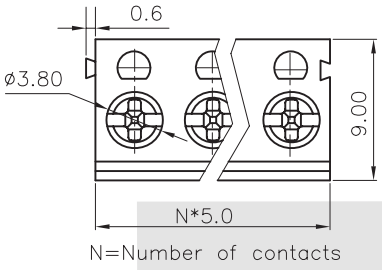

N=Number of contacts

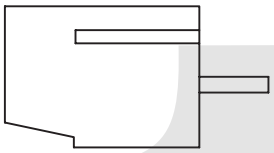

STRAIGHT TYPE

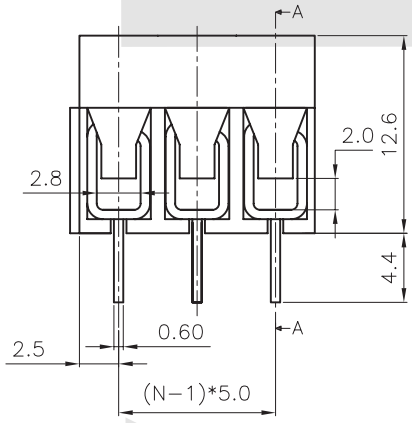

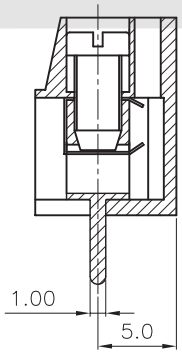

SECTION A−A

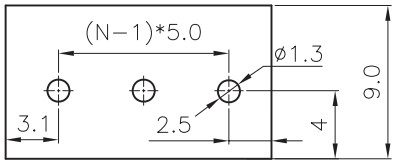

P.C.B.LAYOUT

ORDER INFORMATION

Product NO.: KLS2-305V-5.00-XXP X X X

- Pos. NO.
- Series No.
- Pitch: 5.00=5.00mm, 10.00=10.00mm
- Number of Pole
- Customer Request
- Screw: C=Cross Screw, S=Slot Screw
- Color: 1=Gray, 2=Blue, 3=Black, 4=Green, 5=Orange, 6=Red, 7=Transparent, 8=Yellow, 9=White

PCB Series

KLS2-306V-5.00 Series Pitch=5.00mm/10.00mm

Electrical :

Rated voltage: 300V
Rated current:10A
Contact resistance: 20mΩ
Insulation resistance: 5000MΩ/1000V
Withstanding Voltage: AC2000V/1Min
Wire range: 22-14AWG 1.5mm²



Material

Screws: M2.5 steel Zinc plated
Wire guard: Stainless steel I
Pin header: Brass, Tin plated
Housing: PBT, UL94V-0

Mechanical

Temp. Range:-30°C~+120°C
MAX Soldering: +250°C for 5 Sec.
Torque: 0.4Nm (3.6 lb.in)
Strip length: 4.5-5mm

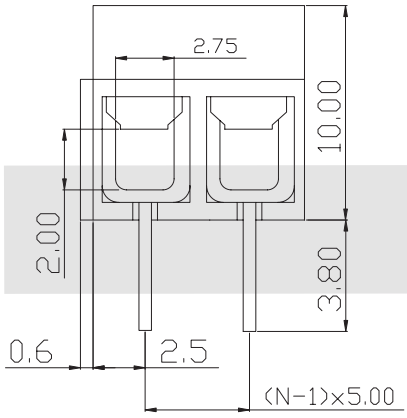

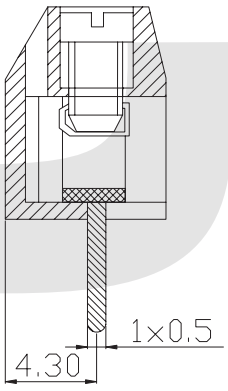

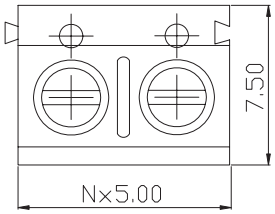

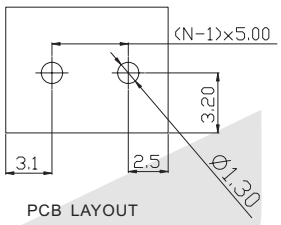

PCB LAYOUT

ORDER INFORMATION

Product NO.: KLS2-306V-5.00-XXP X X X

- Pos. NO.
- Series No.
- Pitch: 5.00=5.00mm
  10.00=10.00mm
- Number of Pole
- Customer Request
- Screw: C=Cross Screw
  S=Slot Screw
- Color: 1=Gray 2=Blue 3=Black
  4=Green 5=Orange 6=Red
  7=Transparent 8=Yellow 9=White

PCB Series

KLS2-126-5.00 Series Pitch=5.00mm/10.00mm

Electrical :

Rated voltage: 300V
Rated current: 10A
Contact resistance: 20mΩ
Insulation resistance: 5000MΩ/1000V
Withstanding Voltage: AC1500V/1Min
Wire range: 24-18AWG 2.5mm²



Material

Screws: M2.5 steel Zinc plated
Wire guard: phosphor bronze Ni plated or stainless steel
Pin header: Brass, Tin plated
Housing: PA66, UL94V-0

Mechanical

Temp. Range:-40°C~+105°C
MAX Soldering: +250°C for 5 Sec.
Torque: 0.4Nm (3.6lb.in)
Strip length: 6-7mm

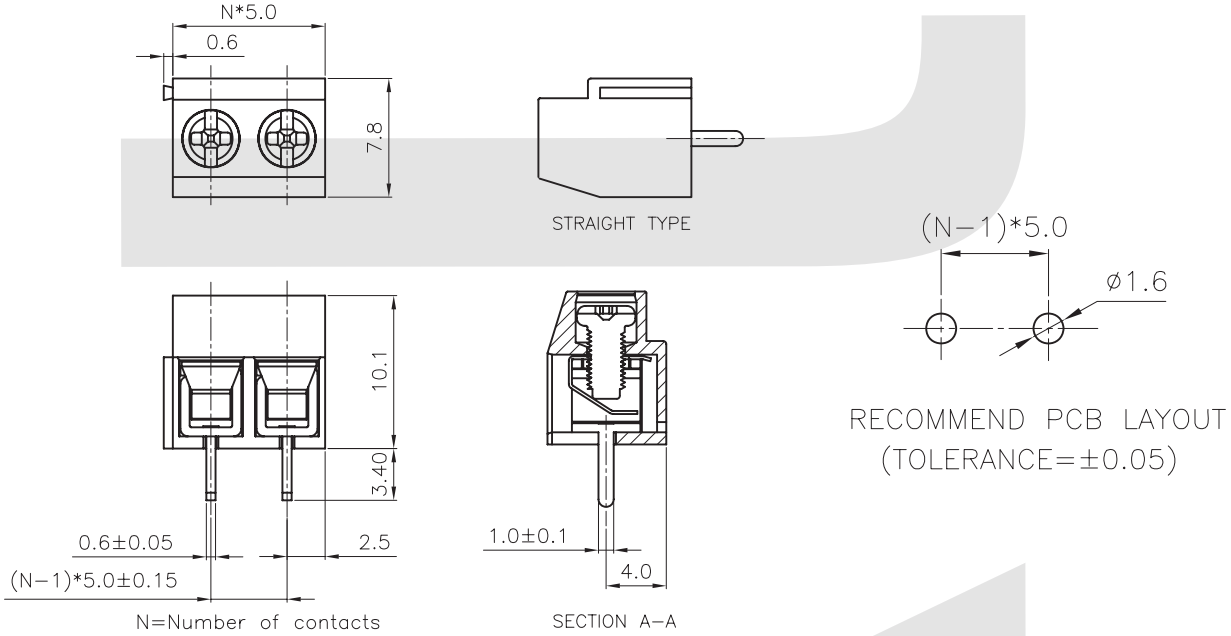

ORDER INFORMATION

Product NO.: KLS2-126-5.00-XXP X X X

- Pos. NO.
- Series No.
- Pitch: 5.00=5.00mm, 10.00=10.00mm
- Number of Pole
- Customer Request
- Screw: C=Cross Screw, S=Slot Screw
- Color: 1=Gray, 2=Blue, 3=Black, 4=Green, 5=Orange, 6=Red, 7=Transparent, 8=Yellow, 9=White

PCB Series

KLS2-126R-5.00 Series Pitch=5.00mm/10.00mm

Electrical :

Rated voltage: 300V
Rated current: 10A
Contact resistance: 20mΩ
Insulation resistance: 5000MΩ/1000V
Withstanding Voltage: AC1500V/1Min
Wire range: 22-14AWG 2.5mm²



Material

Screws: M2.5 steel Zinc plated
Wire guard: phosphor bronze Ni plated or stainless steel
Pin header: Brass, Tin plated
Housing: PA66, UL94V-0

Mechanical

Temp. Range: -40°C~+105°C
MAX Soldering: +250°C for 5 Sec.
Torque: 0.4Nm (3.6lb.in)
Strip length: 6-7mm

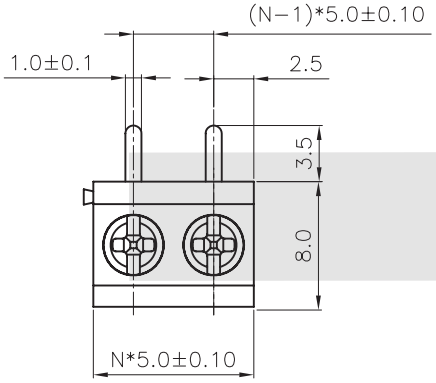

N=Number of contacts

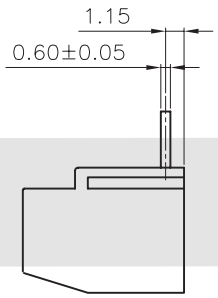

STRAIGHT TYPE

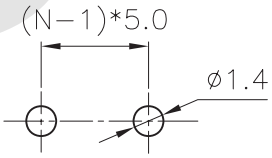

RECOMMEND PCB LAYOUT
(TOLERANCE=±0.05)

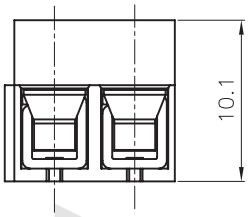

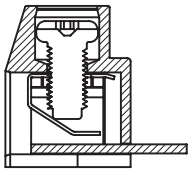

SECTION A–A

ORDER INFORMATION

Product NO.: KLS2-126R-5.00-XXP X X X

Pos. NO.
Series No.
Pitch: 5.00=5.00mm
10.00=10.00mm
Number of Pole
Customer Request
Screw: C=Cross Screw
S=Slot Screw
Color: 1=Gray 2=Blue 3=Black
4=Green 5=Orange 6=Red
7=Transparent 8=Yellow 9=White

PCB Series

KLS2-127-5.00/5.08 Series Pitch=5.00mm/5.08mm

Electrical :

Rated voltage: 300V
Rated current: 12A
Contact resistance: 20mΩ
Insulation resistance: 5000MΩ/1000V
Withstanding Voltage: AC1500V/1Min
Wire range: 26-16AWG 1.5mm²



Material

Screws: M2.5 steel Zinc plated
Contact: Brass
Pin header: Brass, Tin plated
Housing: PA66, UL94V-0

Mechanical

Temp. Range: -40°C~+105°C
MAX Soldering: +250°C for 5 Sec.
Torque: 0.5Nm (4.5lb.in)
Strip length: 5-6mm

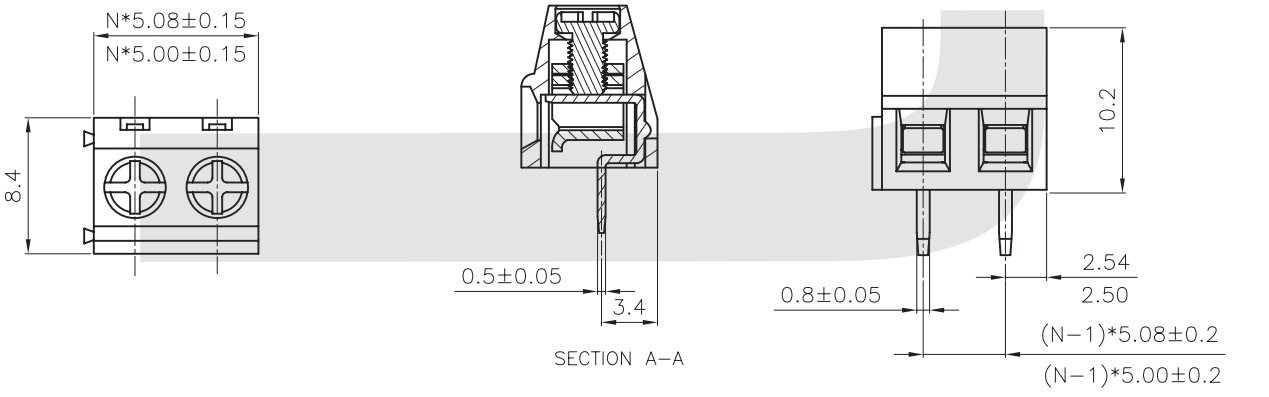

ORDER INFORMATION

Product NO.: KLS2-127-5.00-XXP X X X

- Pos. NO.
- Series No.
- Pitch: 5.00=5.00mm, 5.08=5.08mm
- Number of Pole
- Customer Request
- Screw: C=Cross Screw, S=Slot Screw
- Color: 1=Gray, 2=Blue, 3=Black, 4=Green, 5=Orange, 6=Red, 7=Transparent, 8=Yellow, 9=White

PCB Series

KLS2-128-5.00/7.50 Series Pitch=5.00mm/7.50mm

Electrical :

Rated voltage: 300V
Rated current: 16A
Contact resistance: 20mΩ
Insulation resistance: 5000MΩ/1000V
Withstanding Voltage: AC1500V/1Min
Wire range: 24-12AWG 2.5mm²

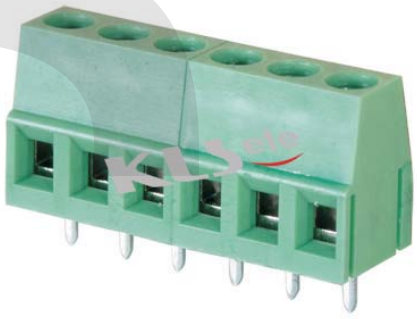

Material

Screws: M2.5 steel Zinc plated
Contact: Brass
Pin header: Brass, Tin plated
Housing: PA66, UL94V-0

Mechanical

Temp. Range: -40°C~+105°C
MAX Soldering: +250°C for 5 Sec.
Torque: 0.4Nm (3.6lb.in)
Strip length: 6-7mm

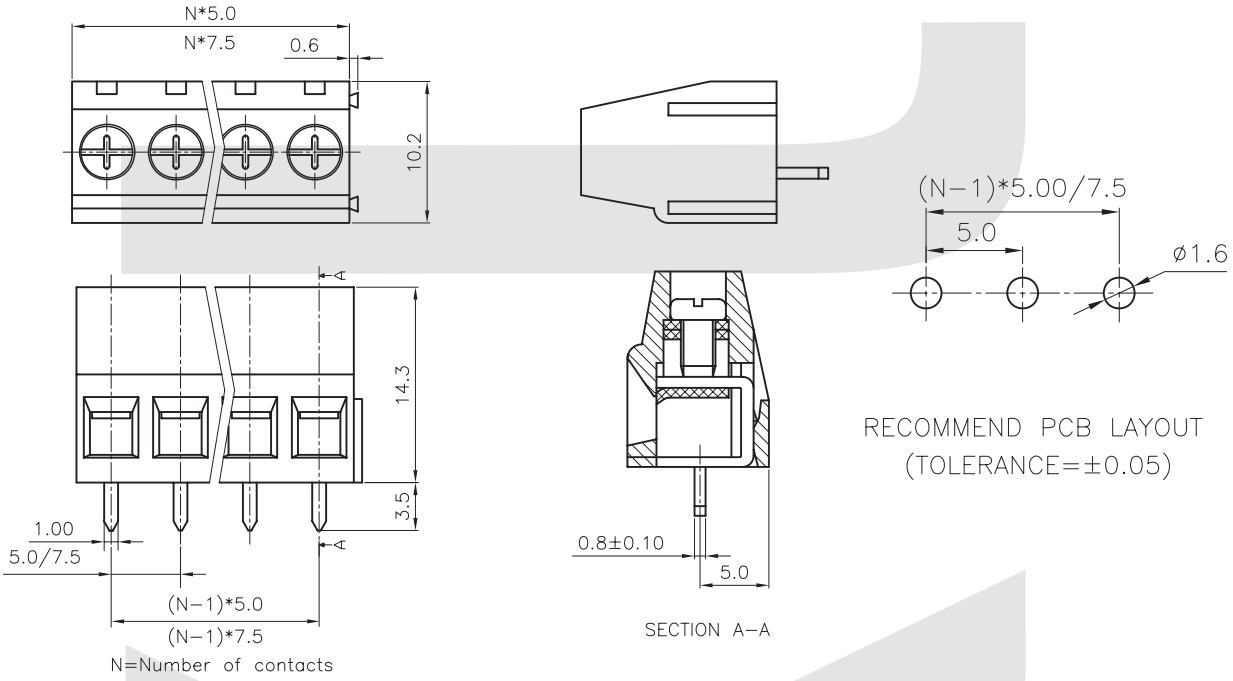

ORDER INFORMATION

Product NO.: KLS2-128-5.00-XXP X X X

- Pos. NO.
- Series No.
- Pitch: 5.00=5.00mm, 7.50=7.50mm
- Number of Pole
- Customer Request
- Screw: C=Cross Screw, S=Slot Screw
- Color: 1=Gray, 2=Blue, 3=Black, 4=Green, 5=Orange, 6=Red, 7=Transparent, 8=Yellow, 9=White

PCB Series

KLS2-128R-5.00/7.50 Series Pitch=5.00mm/7.50mm

Electrical :

Rated voltage: 300V
Rated current: 16A
Contact resistance: 20mΩ
Insulation resistance: 5000MΩ/1000V
Withstanding Voltage: AC1500V/1Min
Wire range: 24-12AWG 2.5mm²

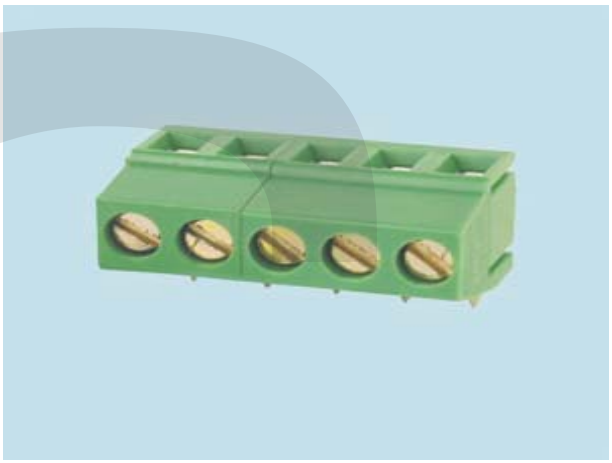

Material

Screws: M2.5 steel Zinc plated
Contact: Brass
Pin header: Brass, Tin plated
Housing: PA66, UL94V-0

Mechanical

Temp. Range: -40°C~+105°C
MAX Soldering: +250°C for 5 Sec.
Torque: 0.4Nm (3.6lb.in)
Strip length: 6-7mm

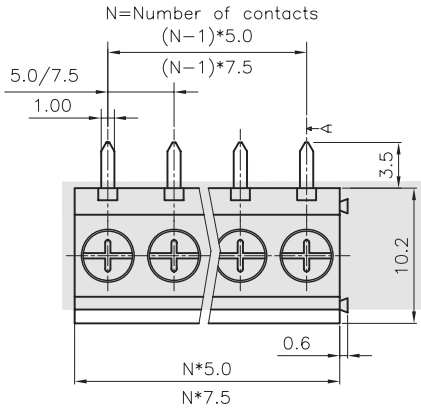

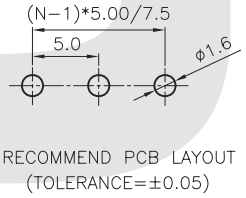

RECOMMEND PCB LAYOUT
(TOLERANCE=±0.05)

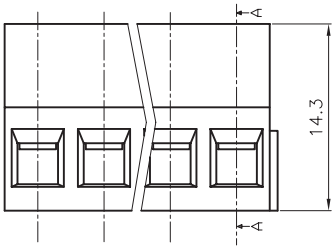

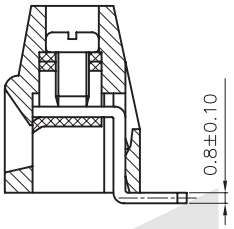

SECTION A–A

ORDER INFORMATION

Product NO.: KLS2-128R-5.00-XXP X X X

- Pos. NO.
- Series No.
- Pitch: 5.00=5.00mm, 7.50=7.50mm
- Number of Pole
- Customer Request
- Screw: C=Cross Screw, S=Slot Screw
- Color: 1=Gray, 2=Blue, 3=Black, 4=Green, 5=Orange, 6=Red, 7=Transparent, 8=Yellow, 9=White

PCB Series

KLS2-128I-5.00/5.08 Series Pitch=5.00mm/5.08mm

Electrical :

Rated voltage: 300V
Rated current: 16A
Contact resistance: 20mΩ
Insulation resistance: 5000MΩ/1000V
Withstanding Voltage: AC1500V/1Min
Wire range: 24-12AWG 2.5mm²



Material

Screws: M2.5 steel Zinc plated
Contact: Brass
Pin header: Brass, Tin plated
Housing: PA66, UL94V-0

Mechanical

Temp. Range: -40°C~+105°C
MAX Soldering: +250°C for 5 Sec.
Torque: 0.4Nm (3.6lb.in)
Strip length: 6-7mm

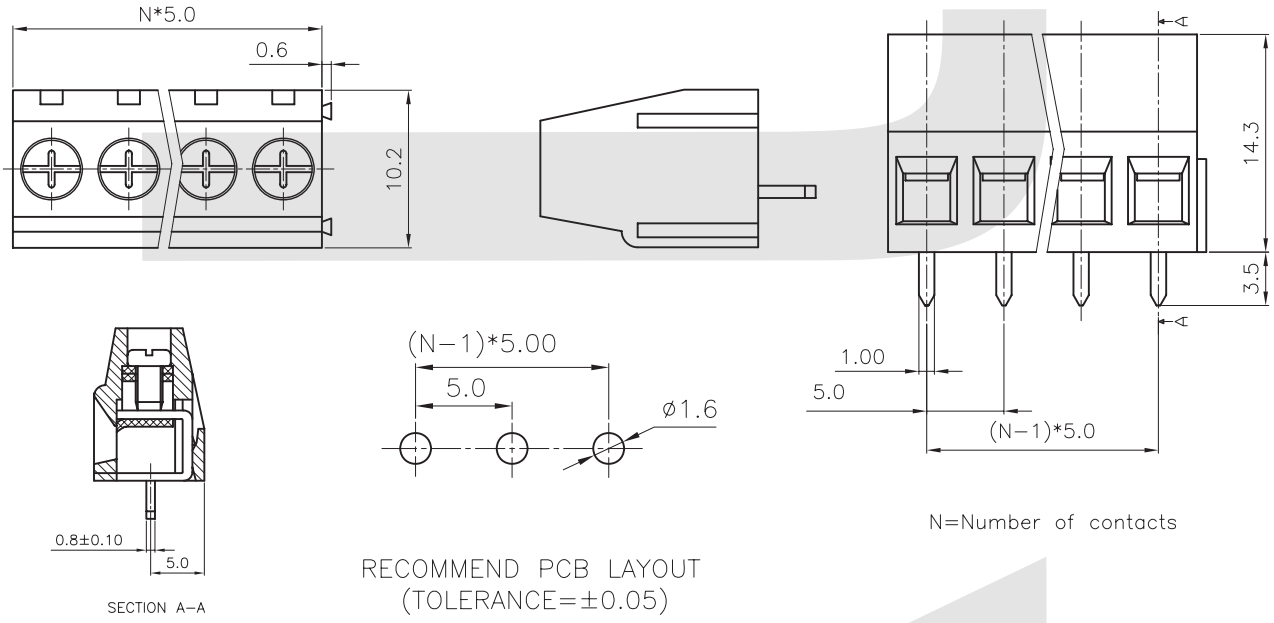

ORDER INFORMATION

Product NO.: KLS2-128I-5.00-XXP X X X

- Pos. NO.
- Series No.
- Pitch: 5.00=5.00mm 10.00=10.00mm
  5.08=5.08mm 10.16=10.16mm
- Number of Pole
- Customer Request
- Screw: C=Cross Screw
  S=Slot Screw
- Color: 1=Gray 2=Blue 3=Black
  4=Green 5=Orange 6=Red
  7=Transparent 8=Yellow 9=White

PCB Series

KLS2-128IH-5.00/5.08 Series Pitch=5.00mm/5.08mm

Electrical :

Rated voltage: 300V
Rated current: 10A
Contact resistance: 20mΩ
Insulation resistance: 5000MΩ/1000V
Withstanding Voltage: AC2000V/1Min
Wire range: 24-12AWG 2.5mm²



Material

Screws: M2.5 steel Zinc plated
Contact:Brass, Ni plated
Pin header: Brass, Tin plated
Housing: PA66, UL94V-0

Mechanical

Temp. Range:-40°C~+105°C
MAX Soldering: +250°C for 5 Sec.
Torque: 0.4Nm (3.6 lb.in)
Strip length: 6-7mm

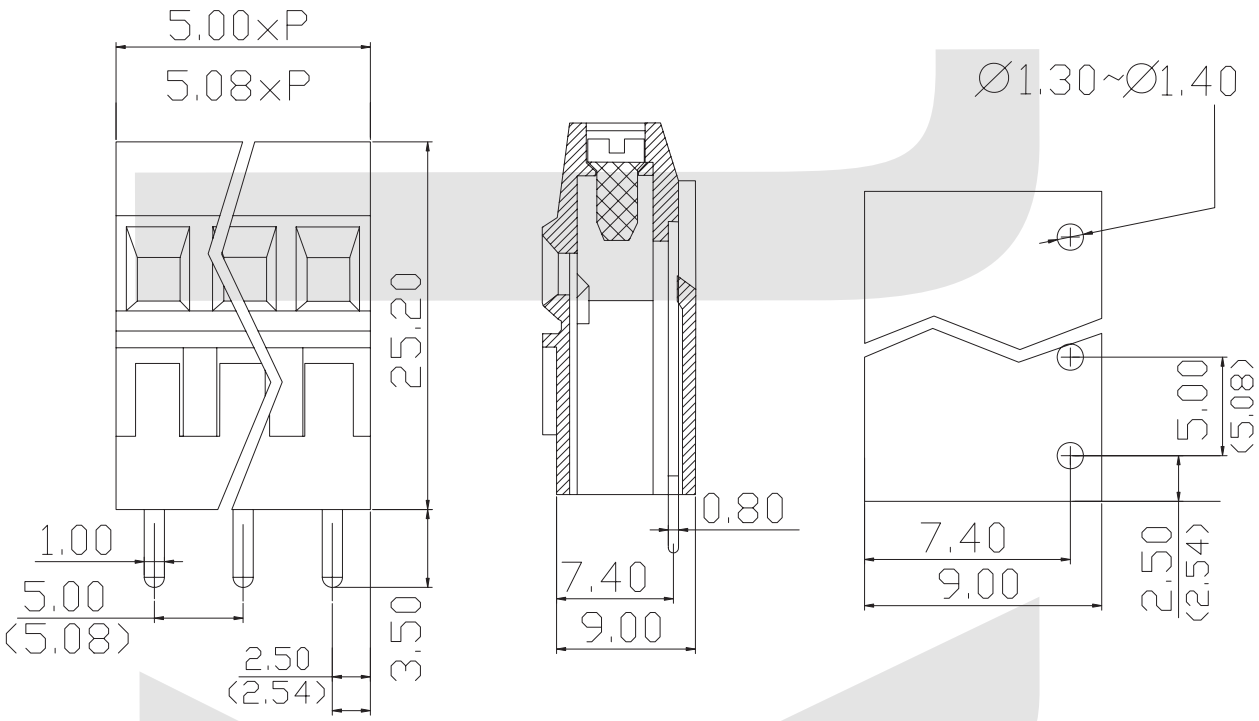

ORDER INFORMATION

Product NO.: KLS2-128IH-5.00-XXP X X X

Pos. NO.
Series No.
Pitch: 5.00=5.00mm 5.08=5.08mm
10.00=10.00mm 10.16=10.16mm
Number of Pole
Customer Request
Screw: C=Cross Screw
S=Slot Screw
Color: 1=Gray 2=Blue 3=Black
4=Green 5=Orange 6=Red
7=Transparent 8=Yellow 9=White

PCB Series

KLS2-128IA-5.00/5.08 Series Pitch=5.00mm/5.08mm

Electrical :

Rated voltage: 300V
Rated current: 10A
Contact resistance: 20mΩ
Insulation resistance: 5000MΩ/1000V
Withstanding Voltage: AC2000V/1Min
Wire range: 24-12AWG 2.5mm²



Material

Screws: M2.5 steel Zinc plated
Contact:Brass, Ni plated
Pin header: Brass, Tin plated
Housing: PA66, UL94V-0

Mechanical

Temp. Range:-40°C~+105°C
MAX Soldering: +250°C for 5 Sec.
Torque: 0.4Nm (3.6 lb.in)
Strip length: 6-7mm

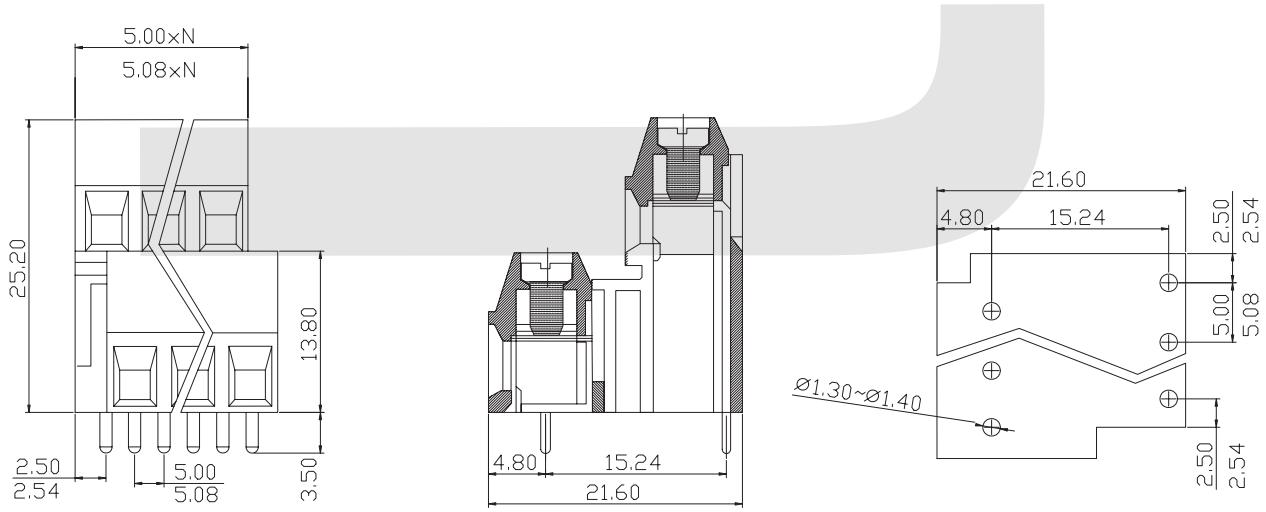

ORDER INFORMATION

Product NO.: KLS2-128IA-5.00-XXP X X X

Pos. NO.
Series No.
Pitch: 5.00=5.00mm 5.08=5.08mm
10.00=10.00mm 10.16=10.16mm
Number of Pole
Customer Request
Screw: C=Cross Screw
S=Slot Screw
Color: 1=Gray 2=Blue 3=Black
4=Green 5=Orange 6=Red
7=Transparent 8=Yellow 9=White

PCB Series

KLS2-128IB-5.00/5.08 Series Pitch=5.00mm/5.08mm

Electrical :

Rated voltage: 300V
Rated current: 10A
Contact resistance: 20mΩ
Insulation resistance: 5000MΩ/1000V
Withstanding Voltage: AC2000V/1Min
Wire range: 24-12AWG 2.5mm²



Material

Screws: M2.5 steel Zinc plated
Contact:Brass, Ni plated
Pin header: Brass, Tin plated
Housing: PA66, UL94V-0

Mechanical

Temp. Range:-40°C~+105°C
MAX Soldering: +250°C for 5 Sec.
Torque: 0.4Nm (3.6 lb.in)
Strip length: 6-7mm

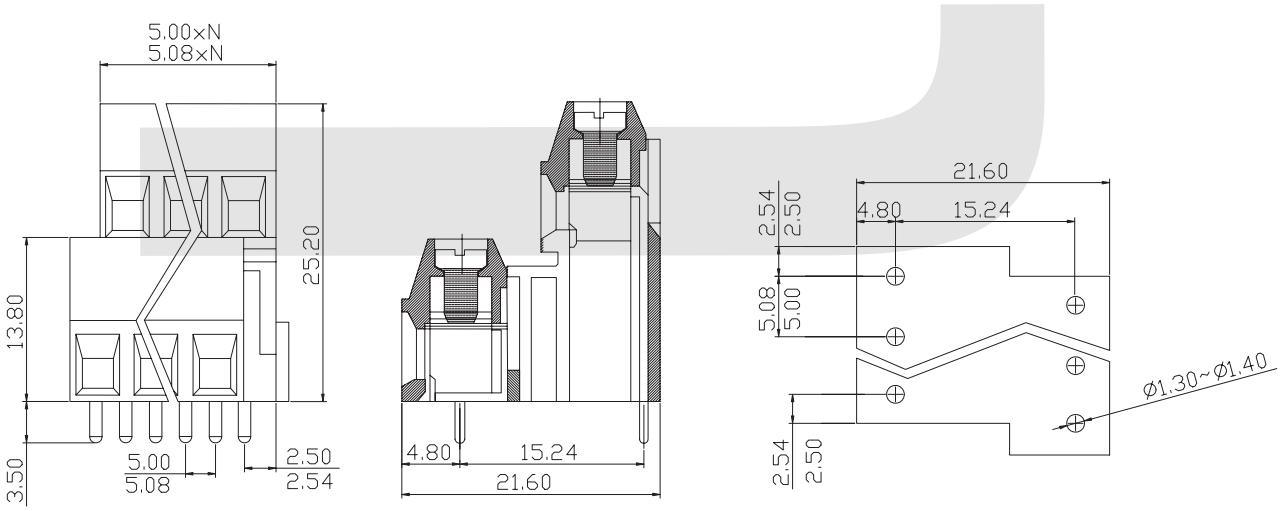

ORDER INFORMATION

Product NO.: KLS2-128IB-5.00-XXP X X X

- Pos. NO.
- Series No.
- Pitch: 5.00=5.00mm 5.08=5.08mm 10.00=10.00mm 10.16=10.16mm
- Number of Pole
- Customer Request
- Screw: C=Cross Screw S=Slot Screw
- Color: 1=Gray 2=Blue 3=Black 4=Green 5=Orange 6=Red 7=Transparent 8=Yellow 9=White

PCB Series

KLS2-129-5.00/5.08 Series Pitch=5.00mm/5.08mm

Electrical :

Rated voltage: 300V
Rated current: 10A
Contact resistance: 20mΩ
Insulation resistance: 5000MΩ/1000V
Withstanding Voltage: AC1500V/1Min
Wire range: 24-12AWG 2.5mm²



Material

Screws: M2.5 steel Zinc plated
Contact: Brass
Pin header: Brass, Tin plated
Housing: PA66, UL94V-0

Mechanical

Temp. Range: -40°C~+105°C
MAX Soldering: +250°C for 5 Sec.
Torque: 0.4Nm (3.6lb.in)
Strip length: 6-7mm

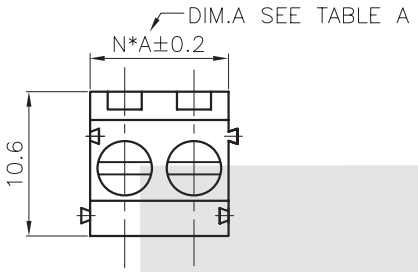

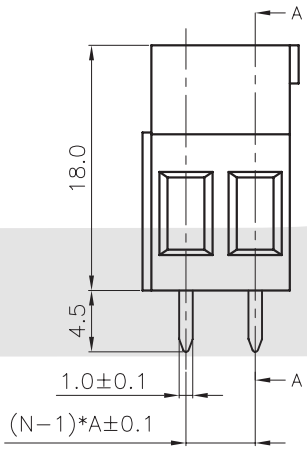

N: NUMBER OF CONTACTS

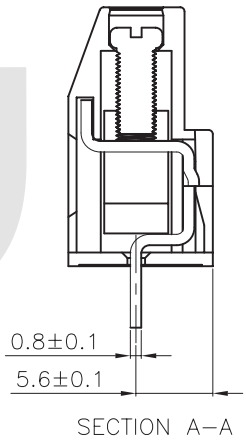

SECTION A–A

TABLE A

TYPE	Dimension
	A
1	5.00
2	5.08
3	7.62

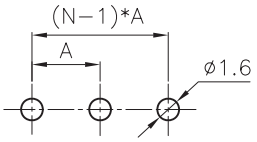

RECOMMEND PCB LAYOUT
(TOLERANCE=±0.05)

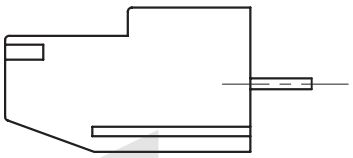

STRAIGHT TYPE

ORDER INFORMATION

Product NO.: KLS2-129-5.08-XXP X X X

Pos. NO.
Series No.
Pitch: 5.00=5.00mm 5.08=5.08mm
7.62=7.62mm 10.00=10.00mm 10.16=10.16mm
Number of Pole

Customer Request
Screw: C=Cross Screw
S=Slot Screw
Color: 1=Gray 2=Blue 3=Black
4=Green 5=Orange 6=Red
7=Transparent 8=Yellow 9=White

PCB Series

KLS2-129R-5.00/5.08 Series Pitch=5.00mm/5.08mm

Electrical :

Rated voltage: 300V
Rated current: 10A
Contact resistance: 20mΩ
Insulation resistance: 5000MΩ/1000V
Withstanding Voltage: AC1500V/1Min
Wire range: 24-12AWG 2.5mm²



Material

Screws: M2.5 steel Zinc plated
Contact: Brass
Pin header: Brass, Tin plated
Housing: PA66, UL94V-0

Mechanical

Temp. Range: -40°C~+105°C
MAX Soldering: +250°C for 5 Sec.
Torque: 0.4Nm (3.6lb.in)
Strip length: 6-7mm

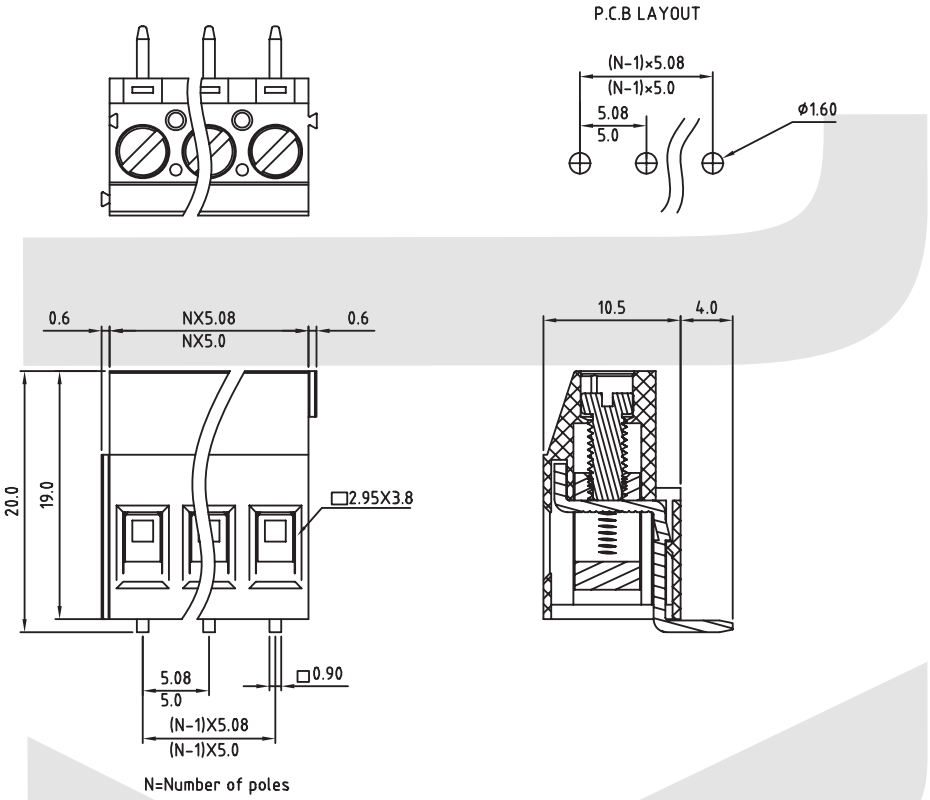

ORDER INFORMATION

Product NO.: KLS2-129R-5.08-XXP X X X

Pos. NO.
Series No.
Pitch: 5.00=5.00mm 5.08=5.08mm
7.62=7.62mm 10.00=10.00mm 10.16=10.16mm
Number of Pole
Customer Request
Screw: C=Cross Screw
S=Slot Screw
Color: 1=Gray 2=Blue 3=Black
4=Green 5=Orange 6=Red
7=Transparent 8=Yellow 9=White

PCB Series

KLS2-333K-3.50 Series Pitch=3.50mm

Electrical :

Rated voltage: 300V
Rated current:10A
Contact resistance: 20mΩ
Insulation resistance: 5000MΩ/1000V
Withstanding Voltage: AC2000V/1Min
Wire range: 28-18AWG 1.0mm²



Material

Screws: M2 steel Zinc plated
Reed:Phosphor Bronze ,Electroless nickel
Pin header: Brass, Tin plated
Housing: PBT, UL94V-0

Mechanical

Temp. Range:-40°C~+105°C
MAX Soldering: +250°C for 5 Sec.
Torque: 0.2Nm (1.7 lb.in)
Strip length: 4.5-5mm

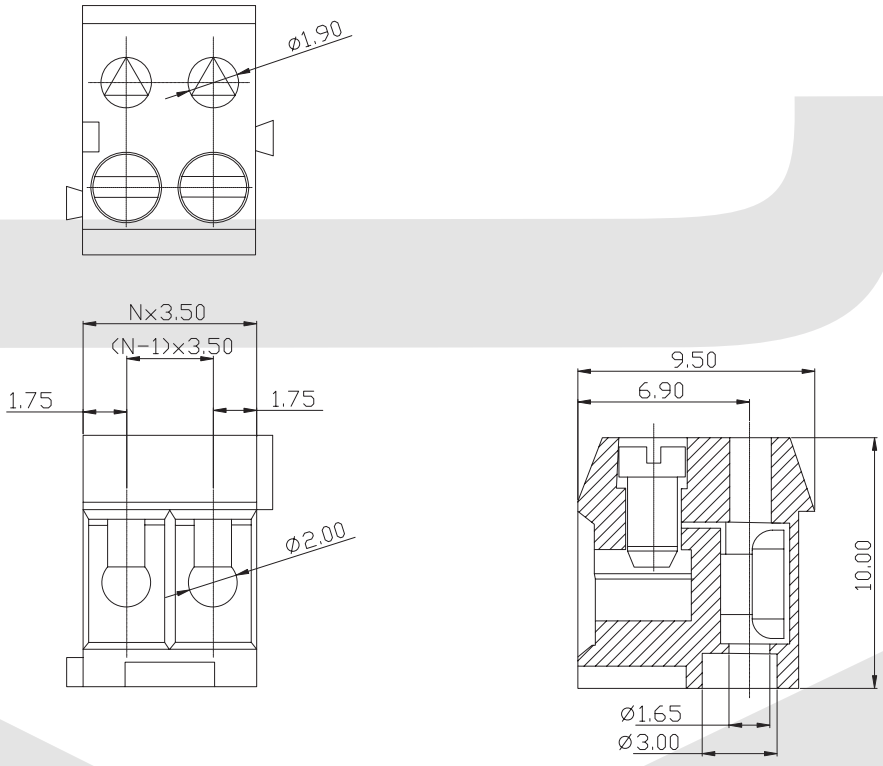

ORDER INFORMATION

Product NO.: KLS2-333K-3.50-XXP X X X

- Pos. NO.
- Series No.
- Pitch: 3.50=3.50mm
- Number of Pole
- Customer Request
- Screw: C=Cross Screw, S=Slot Screw
- Color: 1=Gray, 2=Blue, 3=Black, 4=Green, 5=Orange, 6=Red, 7=Transparent, 8=Yellow, 9=White

PCB Series

KLS2-333J-3.50 Series Pitch=3.50mm

Electrical :
Rated voltage: 300V
Rated current:10A
Contact resistance: 20mΩ
Insulation resistance: 5000MΩ/1000V
Withstanding Voltage: AC2000V/1Min



Material
Pin header: Brass, Tin plated
Housing: PBT, UL94V-0

Mechanical
Temp. Range:-40°C~+105°C

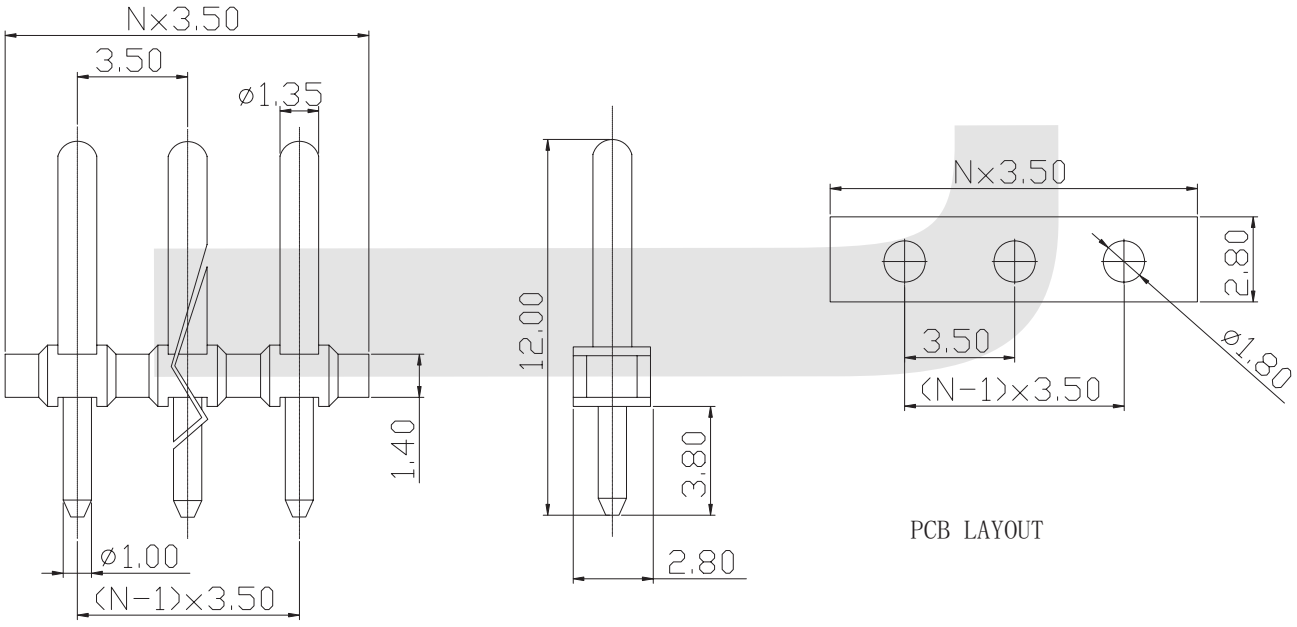

PCB LAYOUT

ORDER INFORMATION

Product NO.: KLS2-333J-3.50-XXP X X

Pos. NO.
Series No.
Pitch: 3.50=3.50mm
Number of Pole
Customer Request
Color: 1=Gray 2=Blue 3=Black
4=Green 5=Orange 6=Red
7=Transparent 8=Yellow 9=White

PCB Series

KLS2-135-6.35 Series Pitch=6.35mm

Electrical :

Rated voltage: 300V
Rated current: 30A
Contact resistance: 20mΩ
Insulation resistance: 5000MΩ/1000V
Withstanding Voltage: AC2000V/1Min
Wire range: 26-10AWG 4mm²

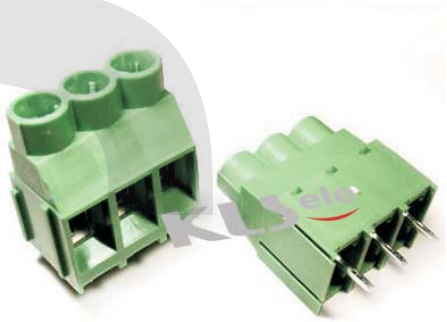

Material

Screws: M3 steel Zinc plated
Contact:Brass, Ni plated
Pin header: Brass, Tin plated
Housing: PA66, UL94V-0

Mechanical

Temp. Range:-40°C~+105°C
MAX Soldering: +250°C for 5 Sec.
Torque: 0.5Nm (4.5 lb.in)
Strip length: 6-7mm

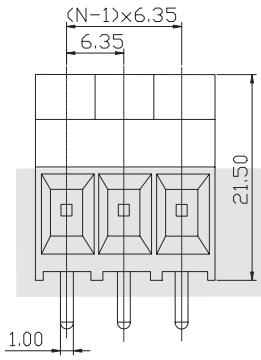

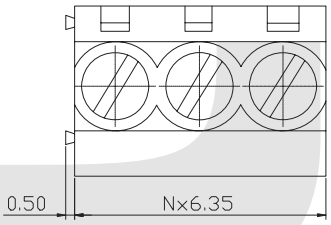

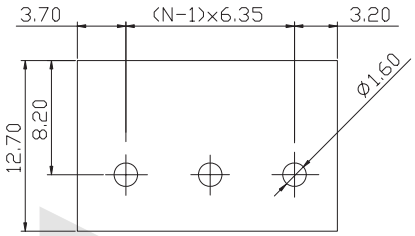

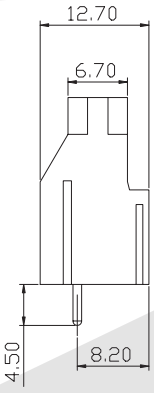

ORDER INFORMATION

Product NO.: KLS2-135-6.35-XXP X X X

- Pos. NO.
- Series No.
- Pitch: 6.35=6.35mm
- Number of Pole
- Customer Request
- Screw: C=Cross Screw, S=Slot Screw
- Color: 1=Gray, 2=Blue, 3=Black, 4=Green, 5=Orange, 6=Red, 7=Transparent, 8=Yellow, 9=White

PCB Series

KLS2-128-5.00/7.50 Series Pitch=5.00mm/7.50mm

Electrical :

Rated voltage: 300V
Rated current: 16A
Contact resistance: 20mΩ
Insulation resistance: 5000MΩ/1000V
Withstanding Voltage: AC1500V/1Min
Wire range: 24-12AWG 2.5mm²

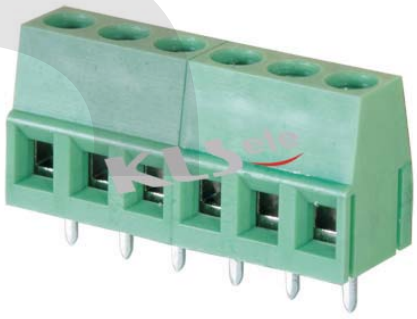

Material

Screws: M2.5 steel Zinc plated
Contact: Brass
Pin header: Brass, Tin plated
Housing: PA66, UL94V-0

Mechanical

Temp. Range: -40°C~+105°C
MAX Soldering: +250°C for 5 Sec.
Torque: 0.4Nm (3.6lb.in)
Strip length: 6-7mm

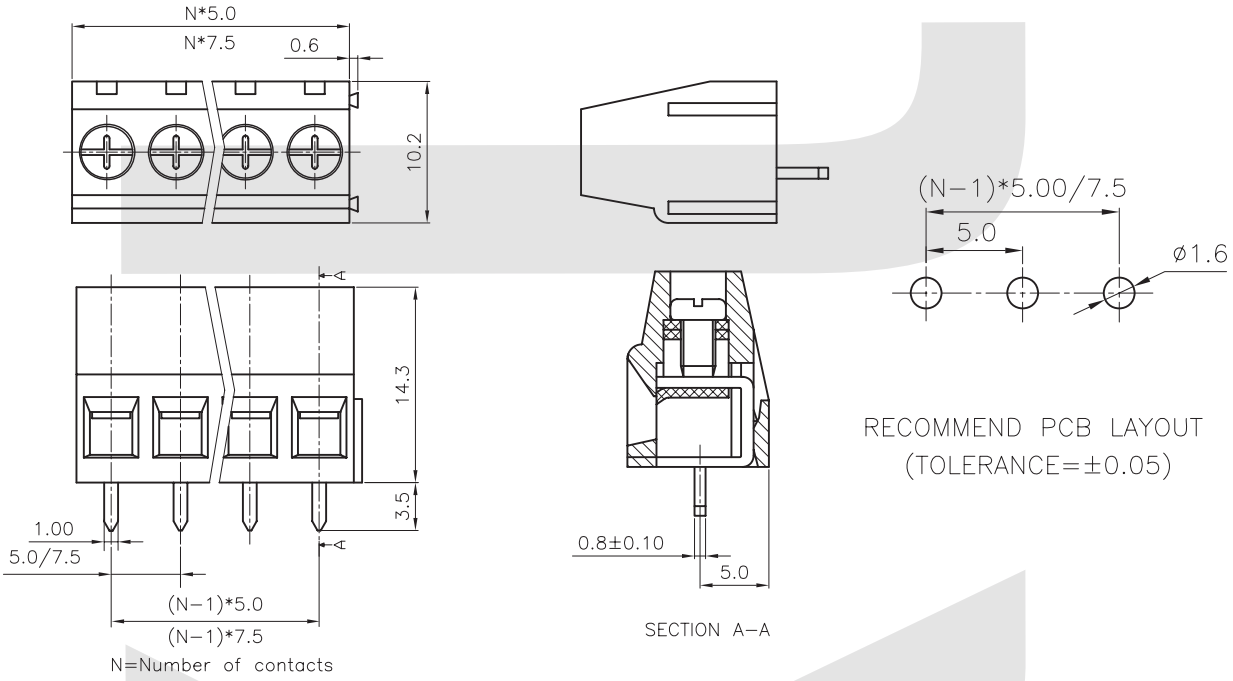

ORDER INFORMATION

Product NO.: KLS2-128-5.00-XXP X X X

- Pos. NO.
- Series No.
- Pitch: 5.00=5.00mm, 7.50=7.50mm
- Number of Pole
- Customer Request
- Screw: C=Cross Screw, S=Slot Screw
- Color: 1=Gray, 2=Blue, 3=Black, 4=Green, 5=Orange, 6=Red, 7=Transparent, 8=Yellow, 9=White

PCB Series

KLS2-128R-5.00/7.50 Series Pitch=5.00mm/7.50mm

Electrical :

Rated voltage: 300V
Rated current: 16A
Contact resistance: 20mΩ
Insulation resistance: 5000MΩ/1000V
Withstanding Voltage: AC1500V/1Min
Wire range: 24-12AWG 2.5mm²

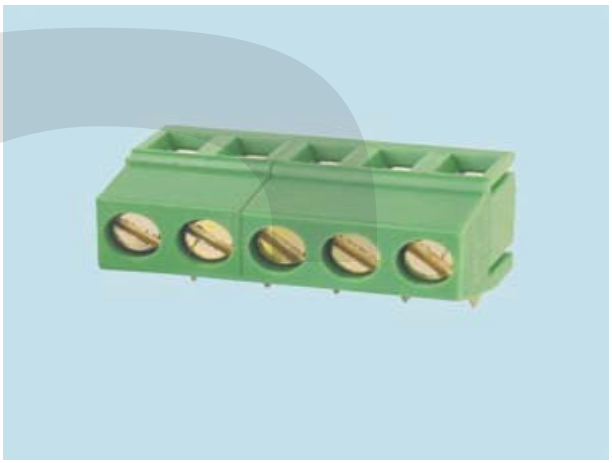

Material

Screws: M2.5 steel Zinc plated
Contact: Brass
Pin header: Brass, Tin plated
Housing: PA66, UL94V-0

Mechanical

Temp. Range: -40°C~+105°C
MAX Soldering: +250°C for 5 Sec.
Torque: 0.4Nm (3.6lb.in)
Strip length: 6-7mm

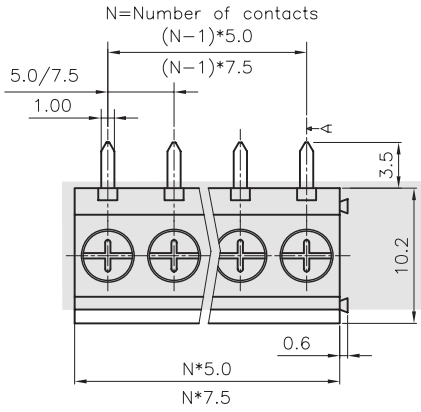

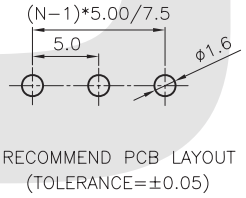

RECOMMEND PCB LAYOUT
(TOLERANCE=±0.05)

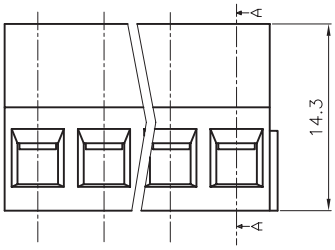

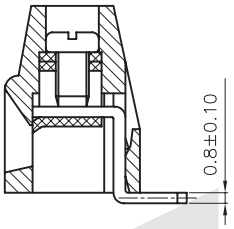

SECTION A–A

ORDER INFORMATION

Product NO.: KLS2-128R-5.00-XXP X X X

- Pos. NO.
- Series No.
- Pitch: 5.00=5.00mm, 7.50=7.50mm
- Number of Pole
- Customer Request
- Screw: C=Cross Screw, S=Slot Screw
- Color: 1=Gray, 2=Blue, 3=Black, 4=Green, 5=Orange, 6=Red, 7=Transparent, 8=Yellow, 9=White

PCB Series

KLS2-300-7.50 Series Pitch=7.50mm

Electrical :

Rated voltage: 300V
Rated current: 16A
Contact resistance: 20mΩ
Insulation resistance: 5000MΩ/1000V
Withstanding Voltage: AC15000V/1Min
Wire range: 22-14AWG 2.5mm²



Material

Screws: M3 steel Zinc plated
Wire guard: phosphor bronze Ni plated or stainless steel
Pin header: Brass, Tin plated
Housing: PBT,UL94V-0

Mechanical

Temp. Range: -30°C~+120°C
MAX Soldering:+250°C for 5 Sec.
Torque: 0.5Nm (4.5lb.in)
Strip length: 4.5-5mm

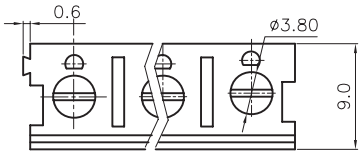

N=Number of contacts

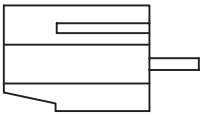

STRAIGHT TYPE

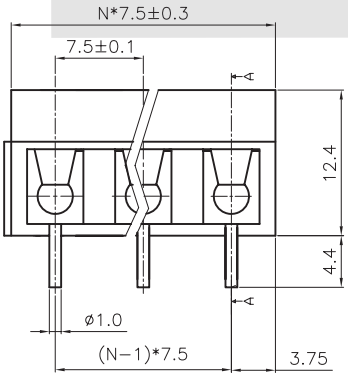

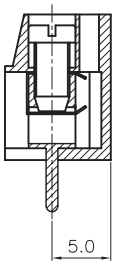

SECTION A-A

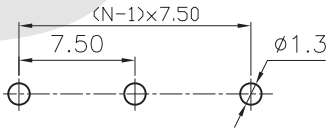

P.C.B.LAYOUT

ORDER INFORMATION

Product NO.: KLS2-300-7.50-XXP X X X

- Pos. NO.
- Series No.
- Pitch: 7.50=7.50mm
- Number of Pole
- Customer Request
- Screw: C=Cross Screw, S=Slot Screw
- Color: 1=Gray, 2=Blue, 3=Black, 4=Green, 5=Orange, 6=Red, 7=Transparent, 8=Yellow, 9=White

PCB Series

KLS2-150-9.50 Series Pitch=9.50mm

Electrical :

Rated voltage: 300V
Rated current: 30A
Contact resistance: 20mΩ
Insulation resistance: 5000MΩ/1000V
Withstanding Voltage: AC2000V/1Min
Wire range: 26-10AWG 4mm²

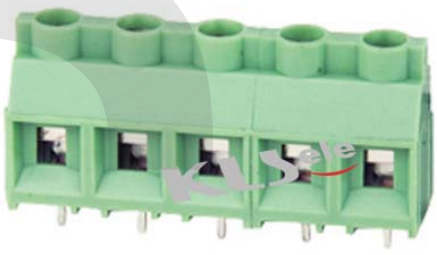

Material

Screws: M3 steel Zinc plated
Contact:Brass, Ni plated
Pin header: Brass, Tin plated
Housing: PA66, UL94V-0

Mechanical

Temp. Range:-40°C~+105°C
MAX Soldering: +250°C for 5 Sec.
Torque: 0.5Nm (4.5 lb.in)
Strip length: 6-7mm

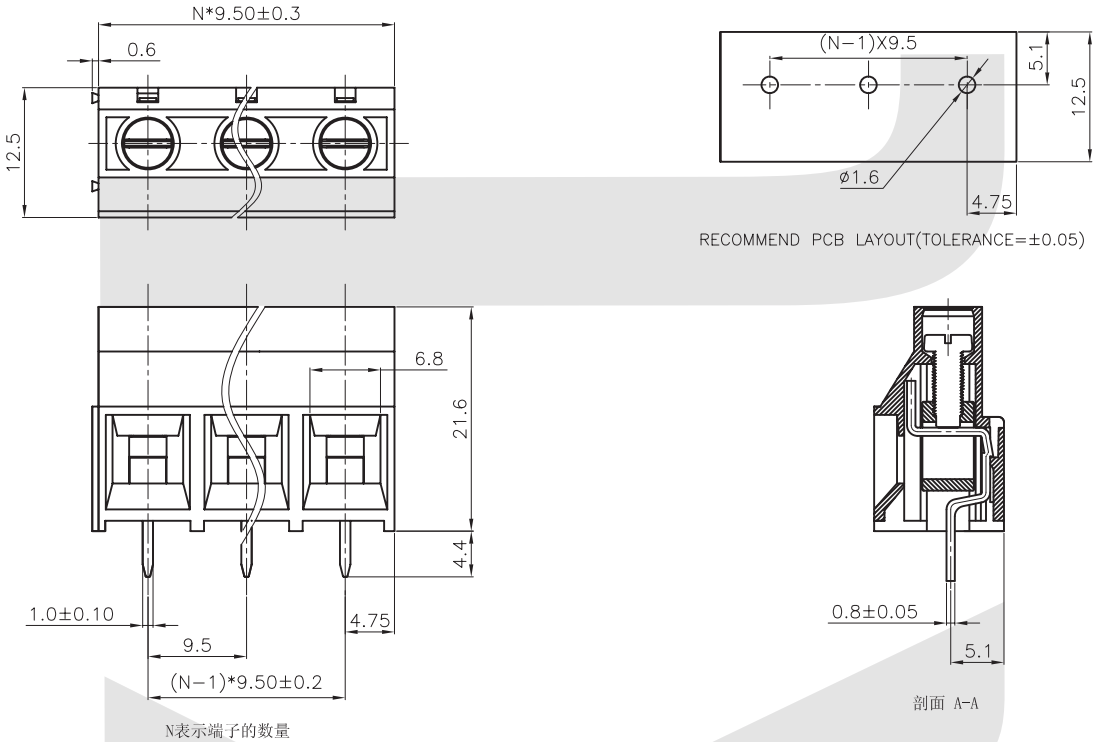

ORDER INFORMATION

Product NO.: KLS2-150-9.50-XXP X X X

- Pos. NO.
- Series No.
- Pitch: 9.50=9.50mm
- Number of Pole
- Customer Request
- Screw: C=Cross Screw, S=Slot Screw
- Color: 1=Gray, 2=Blue, 3=Black, 4=Green, 5=Orange, 6=Red, 7=Transparent, 8=Yellow, 9=White

Pluggable Series

KLS2-EDK-3.50/3.81 Series Pitch=3.50mm/3.81mm

Electrical :

Rated voltage: 300V
Rated current: 8A
Contact resistance: 20mΩ
Insulation resistance: 5000MΩ/1000V
Withstanding Voltage: AC1500V/1Min
Wire range: 18AWG 1mm²



Material

Contact: Phosphor broze
Pin header: Brass, Tin plated
Housing: PA66, UL94V-0

Mechanical

Temp. Range: -40ºC~+105ºC
MAX Soldering: +250ºC for 5 Sec.
Strip length: 5-6mm

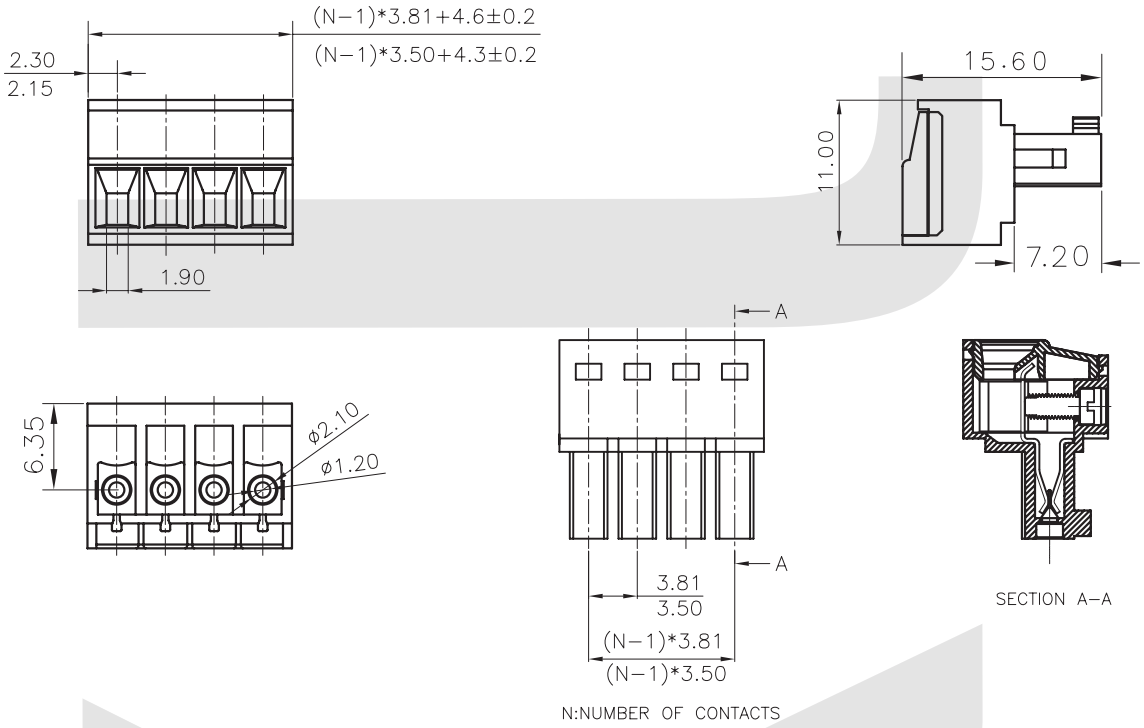

ORDER INFORMATION

Product NO.: KLS2-EDK-3.50-XXP X X X

- Pos. NO.
- Series No.
- Pitch 3.50=3.50mm 3.81=3.81mm
- Number of Pole
- Customer Request
- Screw: C=Cross Screw S=Slot Screw
- Color: 1=Gray 2=Blue 3=Black 4=Green 5=Orange 6=Red 7=Transparent 8=Yellow 9=White

Pluggable Series

KLS2-EDCKM-3.50/3.81 Series Pitch=3.50mm/3.81mm

Electrical :

Rated voltage: 300V
Rated current: 8A
Contact resistance: 20mΩ
Insulation resistance: 5000MΩ/1000V
Withstanding Voltage: AC2000V/1Min
Wire range: 28-16AWG 1.5mm²



Material

Contact: Phosphor broze
Screws: M2,steel,Zinc plated
Housing: PA66, UL94V-0

Mechanical

Temp. Range: -40°C~+105°C
Torque: 0.2Nm(1.7Lb.in)
Strip length: 6-7mm

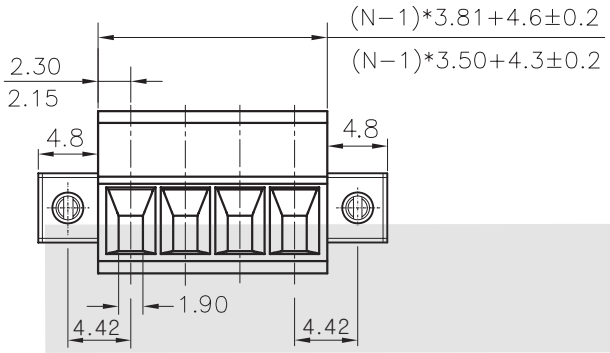

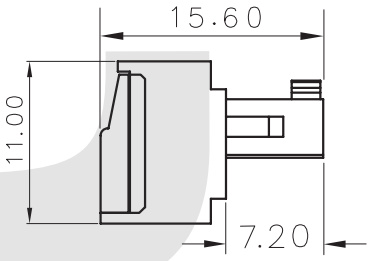

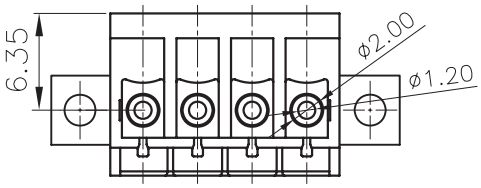

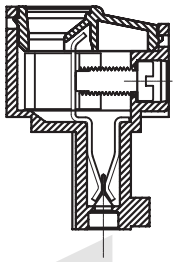

SECTION A–A

ORDER INFORMATION

Product NO.: KLS2-EDCKM-3.50-XXP X X X

- Pos. NO.
- Series No.
- Pitch 3.50=3.50mm 3.81=3.81mm
- Number of Pole
- Customer Request
- Screw: C=Cross Screw S=Slot Screw
- Color: 1=Gray 2=Blue 3=Black 4=Green 5=Orange 6=Red 7=Transparent 8=Yellow 9=White

Pluggable Series

KLS2-EDCD-3.50/3.81 Series Pitch=3.50mm/3.81mm

Electrical :
Rated voltage: 300V
Rated current: 8A
Contact resistance: 20mΩ
Insulation resistance: 5000MΩ/1000V
Withstanding Voltage: AC1500V/1Min

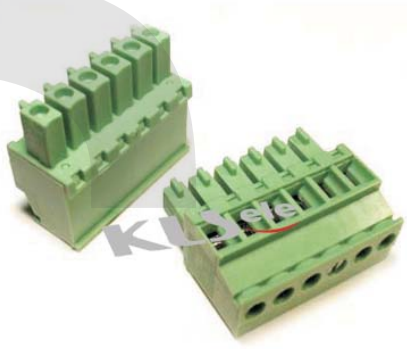

Material
Housing: PBT, UL94V-0
Screws: M2,steel,Zinc plated
Contact: Phosphor Bronze

Mechanical
Temp. Range: -30°C~+120°C
MAX Soldering: +250°C for 5 Sec
Wire range:28-16AWG 1.5mm²
Torque: 0.2Nm(1.7Lb.in)
Strip length: 6-7mm

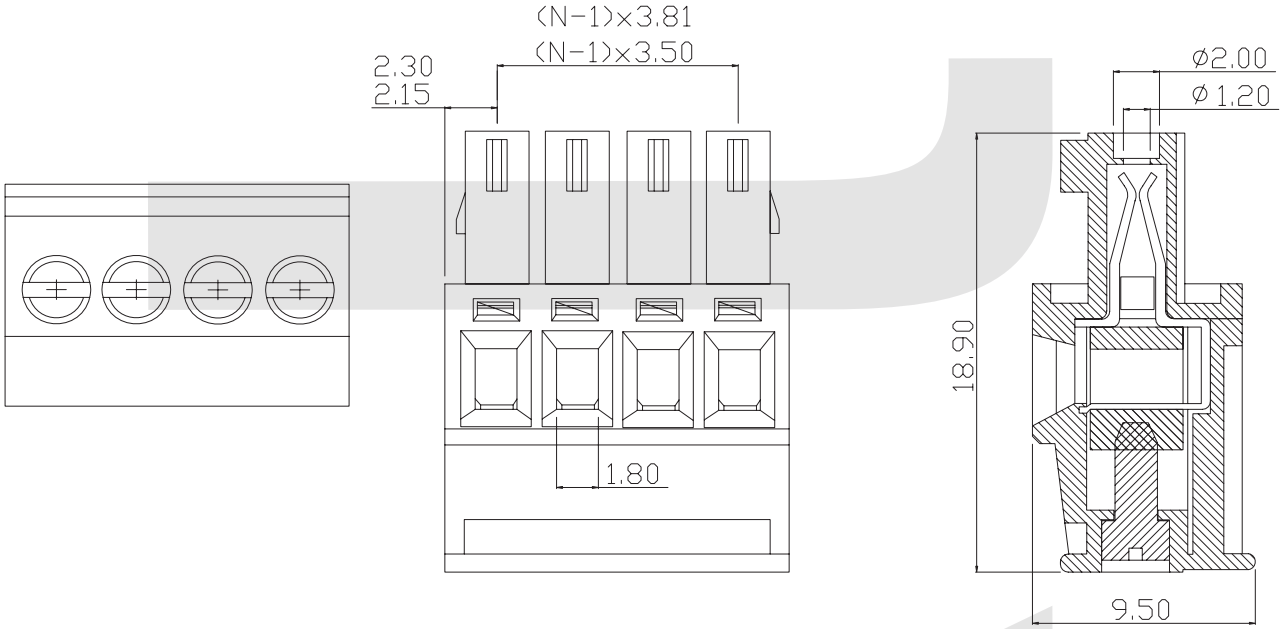

ORDER INFORMATION

Product NO.: KLS2-EDCD-3.50-XXP X X X

Pos. NO.
Series No.
Pitch: 3.50=3.50mm 3.81=3.81mm
Number of Pole
Customer Request
Screw: C=Cross Screw
S=Slot Screw
Color: 1=Gray 2=Blue 3=Black
4=Green 5=Orange 6=Red
7=Transparent 8=Yellow 9=White

Pluggable Series

KLS2-EDCDM-3.50/3.81 Series Pitch=3.50mm/3.81mm

Electrical :
Rated voltage: 300V
Rated current: 8A
Contact resistance: 20mΩ
Insulation resistance: 5000MΩ/1000V
Withstanding Voltage: AC2000V/1Min

Material
Pin header: Brass, Tin plated
Housing: PA66, UL94V-0

Mechanical
Temp. Range: -40°C~+105°C
MAX Soldering: +250°C for 5 Sec



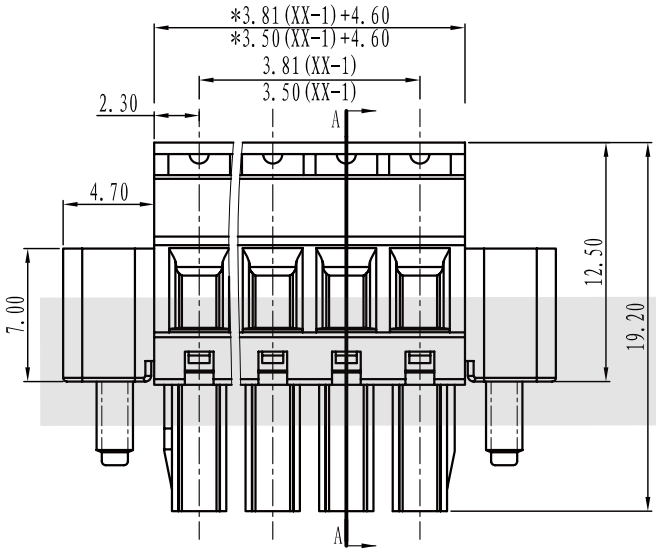

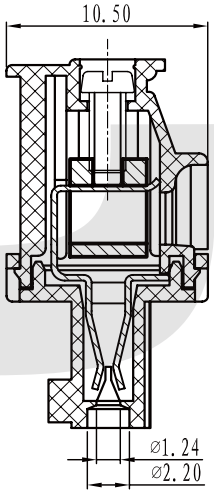

SECTION A-A

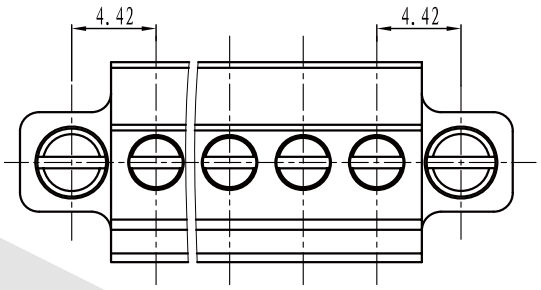

ORDER INFORMATION

Product NO.: KLS2-EDCDM-3.50-XXP X X X

- Pos. NO.
- Series No.
- Pitch: 3.50=3.50mm 3.81=3.81mm
- Number of Pole
- Customer Request
- Screw: C=Cross Screw S=Slot Screw
- Color: 1=Gray 2=Blue 3=Black 4=Green 5=Orange 6=Red 7=Transparent 8=Yellow 9=White

Pluggable Series

KLS2-EDGKD-3.50/3.81 Series Pitch=3.50mm/3.81mm

Electrical :
Rated voltage: 300V
Rated current: 8A
Contact resistance: 20mΩ
Insulation resistance: 5000MΩ/1000V
Withstanding Voltage: AC2000V/1Min

Material
Housing: PA66, UL94V-0
Contact: Phosphor Bronze,Ni plated,Stainless steel

Mechanical
Temp. Range: -40°C~+105°C
Wire range:28-16AWG 1.5mm²
Strip length: 7-8mm



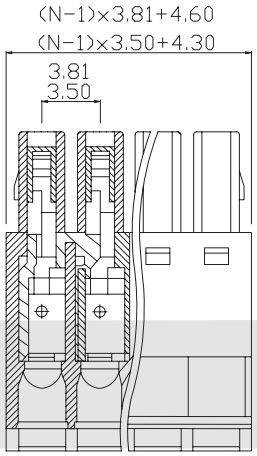

SECTION B-B

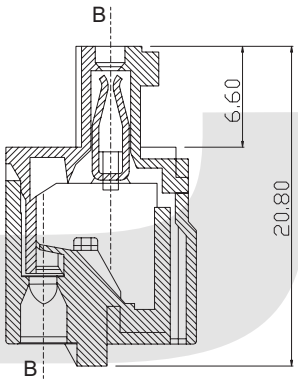

SECTION A-A

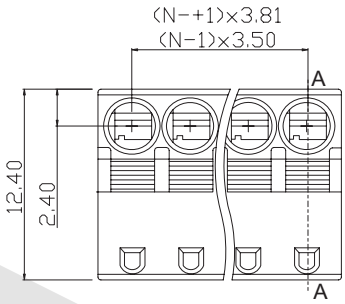

ORDER INFORMATION

Product NO.: KLS2-EDGKD-3.50-XXP X X

Pos. NO.
Series No.
Pitch: 3.50=3.50mm 3.81=3.81mm
Number of Pole
Customer Request
Color: 1=Gray 2=Blue 3=Black
4=Green 5=Orange 6=Red
7=Transparent 8=Yellow 9=White

Pluggable Series

KLS2-EDGKM-3.50/3.81 Series Pitch=3.50/3.81mm

II

Electrical :
Rated voltage: 300V
Rated current: 8A
Contact resistance: 20mΩ
Insulation resistance: 5000MΩ/1000V
Withstanding Voltage: AC2000V/1Min

Material
Pin header: Brass, Tin plated
Housing: PA66, UL94V-0

Mechanical
Temp. Range: -40°C~+105°C
MAX Soldering: +250°C for 5 Sec



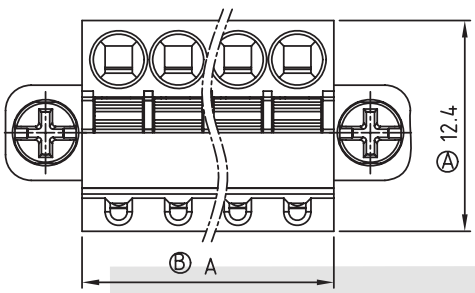

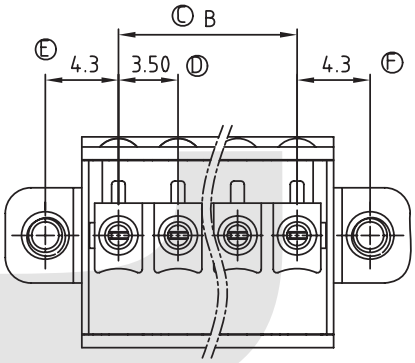

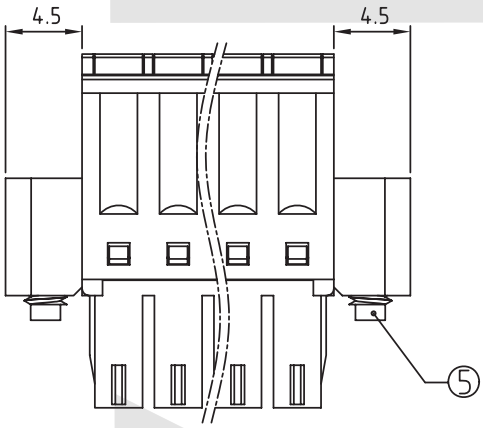

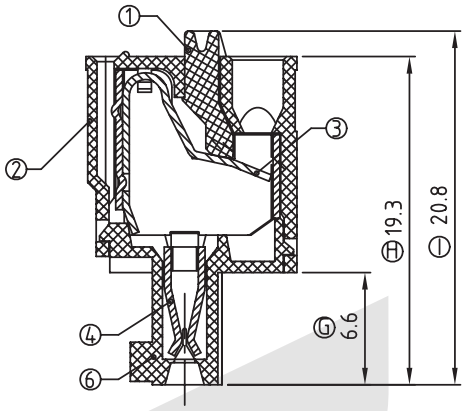

ORDER INFORMATION

Product NO.: KLS2-EDGKM-3.50-XXP X X

Pos. NO.
Series No.
Pitch: 3.50=3.50mm 3.81=3.81mm
Number of Pole
Customer Request
Color: 1=Gray 2=Blue 3=Black
4=Green 5=Orange 6=Red
7=Transparent 8=Yellow 9=White

Pluggable Series

KLS2-EDGF-3.81 Series Pitch=3.81mm

Electrical :
Rated voltage: 300V
Rated current: 8A
Contact resistance: 20mΩ
Insulation resistance: 5000MΩ/1000V
Withstanding Voltage: AC2000V/1Min

Material
Pin header: Brass, Tin plated
Housing: PA66, UL94V-0

Mechanical
Temp. Range: -40°C~+105°C
MAX Soldering: +250°C for 5 Sec



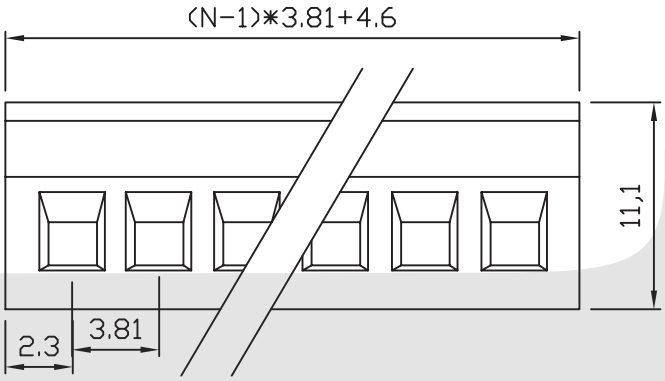

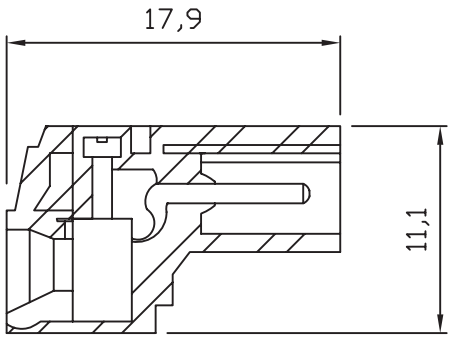

ORDER INFORMATION

Product NO.: KLS2-EDGF-3.81-XXP X X X

- Pos. NO.
- Series No.
- Pitch: 3.81=3.81mm
- Number of Pole
- Customer Request
- Screw: C=Cross Screw, S=Slot Screw
- Color: 1=Gray, 2=Blue, 3=Black, 4=Green, 5=Orange, 6=Red, 7=Transparent, 8=Yellow, 9=White

Pluggable Series

KLS2-EDKF-3.81 Series Pitch=3.81mm

Electrical :
Rated voltage: 300V
Rated current: 8A
Contact resistance: 20mΩ
Insulation resistance: 5000MΩ/1000V
Withstanding Voltage: AC2000V/1Min

Material
Pin header: Brass, Tin plated
Housing: PA66, UL94V-0

Mechanical
Temp. Range: -40°C~+105°C
MAX Soldering: +250°C for 5 Sec



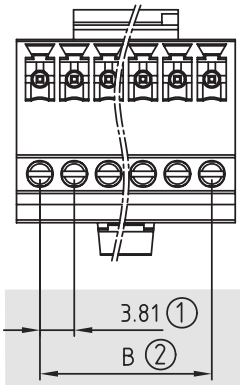

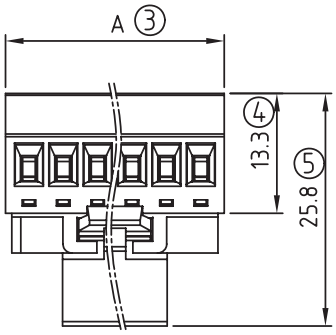

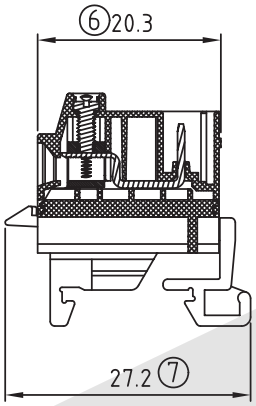

ORDER INFORMATION

Product NO.: KLS2-EDKF-3.81-XXP X X X

- Pos. NO.
- Series No.
- Pitch: 3.81=3.81mm
- Number of Pole
- Customer Request
- Screw: C=Cross Screw, S=Slot Screw
- Color: 1=Gray, 2=Blue, 3=Black, 4=Green, 5=Orange, 6=Red, 7=Transparent, 8=Yellow, 9=White

Pluggable Series

KLS2-EDKFM-3.81 Series Pitch=3.81mm

Electrical :
Rated voltage: 300V
Rated current: 8A
Contact resistance: 20mΩ
Insulation resistance: 5000MΩ/1000V
Withstanding Voltage: AC2000V/1Min

Material
Pin header: Brass, Tin plated
Housing: PA66, UL94V-0

Mechanical
Temp. Range: -40°C~+105°C
MAX Soldering: +250°C for 5 Sec

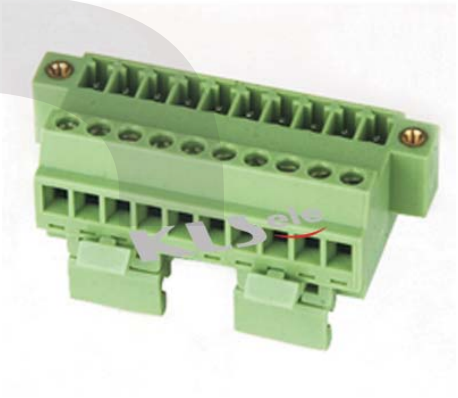

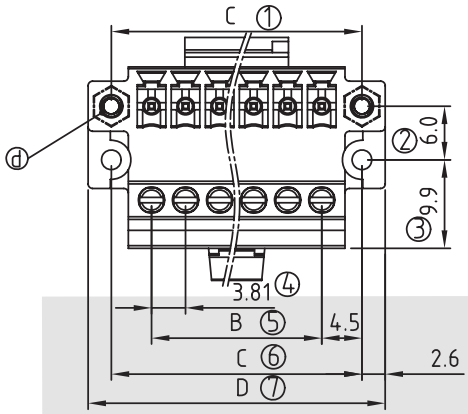

N = Number of poles
Dim A=Nx3.81+1.39
Dim B=(N-1)x3.81
Dim C=Nx3.81+5.19
Dim D=Nx3.81+10.39

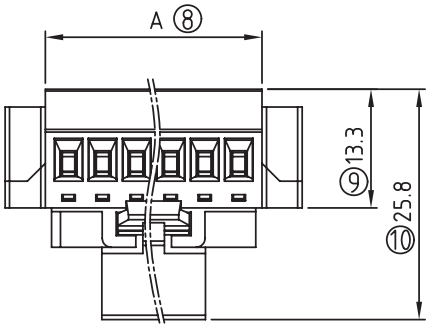

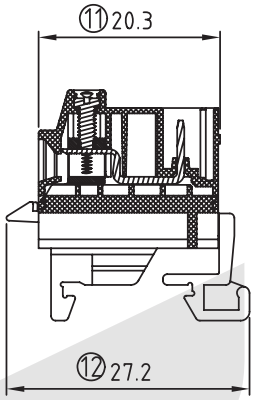

ORDER INFORMATION

Product NO.: KLS2-EDKFM-3.81-XXP X X X

- Pos. NO.
- Series No.
- Pitch: 3.81=3.81mm
- Number of Pole
- Customer Request
- Screw: C=Cross Screw, S=Slot Screw
- Color: 1=Gray, 2=Blue, 3=Black, 4=Green, 5=Orange, 6=Red, 7=Transparent, 8=Yellow, 9=White

Pluggable Series

KLS2-EDV-3.50/3.81 Series Pitch=3.50mm/3.81mm

Electrical :
Rated voltage: 300V
Rated current: 8A
Contact resistance: 20mΩ
Insulation resistance: 5000MΩ/1000V
Withstanding Voltage: AC1500V/1Min

Material
Pin header: Brass, Tin plated
Housing: PA66, UL94V-0

Mechanical
Temp. Range: -40°C~+105°C
MAX Soldering: +250°C for 5 Sec



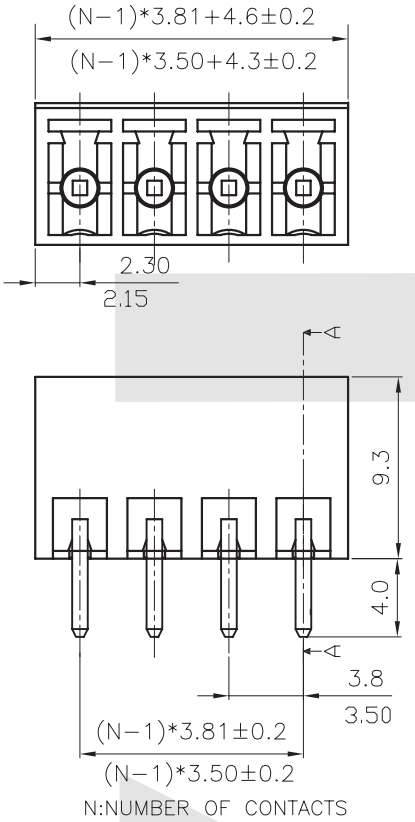

N:NUMBER OF CONTACTS

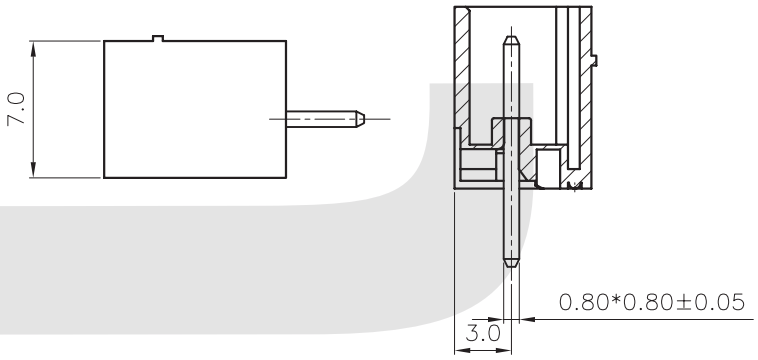

SECTION A–A

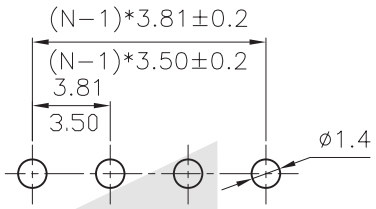

RECOMMEND PCB LAYOUT(TOLERANCE=±0.05)

ORDER INFORMATION

Product NO.: KLS2-EDV-3.50-XXP X X

- Pos. NO.
- Series No.
- Pitch: 3.50=3.50mm 3.81=3.81mm
- Number of Pole
- Customer Request
- Color: 1=Gray 2=Blue 3=Black 4=Green 5=Orange 6=Red 7=Transparent 8=Yellow 9=White

Pluggable Series

KLS2-EDR-3.81/EDR-3.50 Series Pitch=3.50mm/3.81mm

Electrical :

Rated voltage: 300V
Rated current: 8A
Contact resistance: 20mΩ
Insulation resistance: 5000MΩ/1000V
Withstanding Voltage: AC1500V/1Min
Wire range: 18AWG 1mm²



Material

Contact: Phosphor broze
Pin header: Brass, Tin plated
Housing: PA66, UL94V-0

Mechanical

Temp. Range: -40°C~+105°C
MAX Soldering: +250°C for 5 Sec.
Strip length: 5-6mm

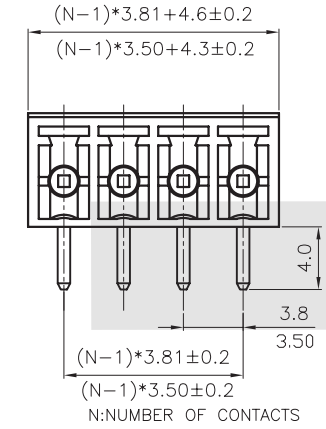

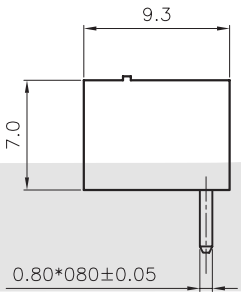

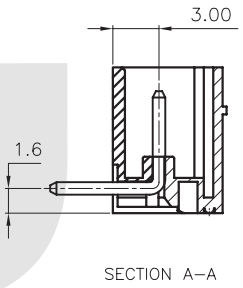

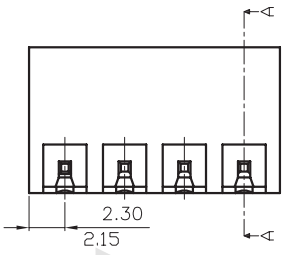

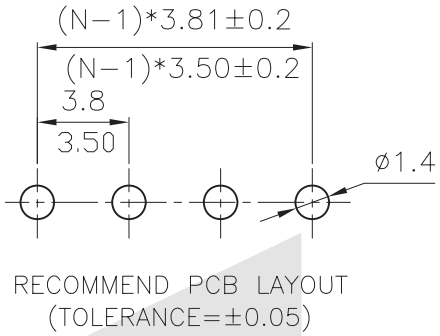

ORDER INFORMATION

Product NO.: KLS2-EDR-3.50-XXP X X

- Pos. NO.
- Series No.
- Pitch: 3.50=3.50mm, 3.81=3.81mm
- Number of Pole
- Customer Request
- Color: 1=Gray, 2=Blue, 3=Black, 4=Green, 5=Orange, 6=Red, 7=Transparent, 8=Yellow, 9=White

Pluggable Series

KLS2-EDLV-3.50/3.81 Series Pitch=3.50mm/3.81mm

Electrical :
Rated voltage: 300V
Rated current: 8A
Contact resistance: 20mΩ
Insulation resistance: 5000MΩ/1000V
Withstanding Voltage: AC1500V/1Min

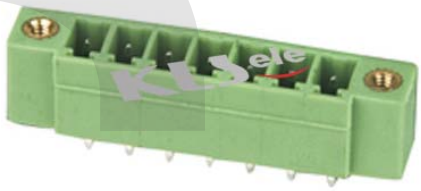

Material
Pin header: Brass, Tin plated
Housing: PA66, UL94V-0

Mechanical
Temp. Range: -40°C~+105°C
MAX Soldering: +250°C for 5 Sec

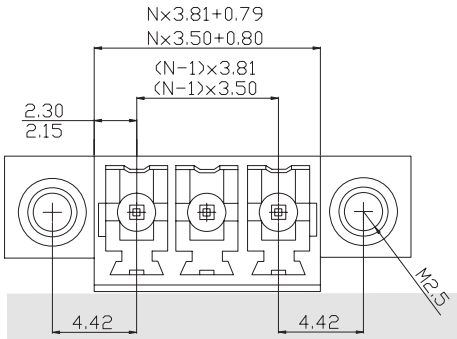

PCB LAYOUT

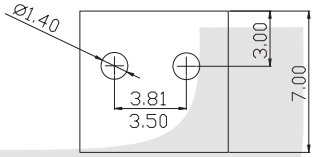

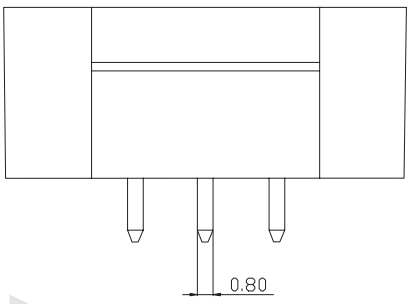

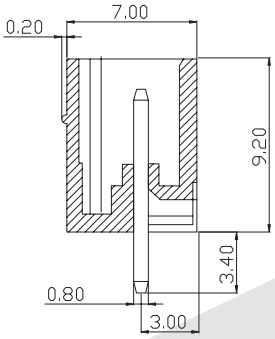

ORDER INFORMATION

Product NO.: KLS2-EDLV-3.50-XXP X X

Pos. NO.
Series No.
Pitch: 3.50=3.50mm 3.81=3.81mm
Number of Pole
Customer Request
Color: 1=Gray 2=Blue 3=Black
4=Green 5=Orange 6=Red
7=Transparent 8=Yellow 9=White

Pluggable Series

KLS2-EDLR-3.81/3.50 Series Pitch=3.50mm/3.81mm

Electrical :

Rated voltage: 300V
Rated current: 8A
Contact resistance: 20mΩ
Insulation resistance: 5000MΩ/1000V
Withstanding Voltage: AC1500V/1Min



Material

Pin header: Brass, Tin plated
Housing: PA66, UL94V-0

Mechanical

Temp. Range: -40°C~+105°C
MAX Soldering: +250°C for 5 Sec

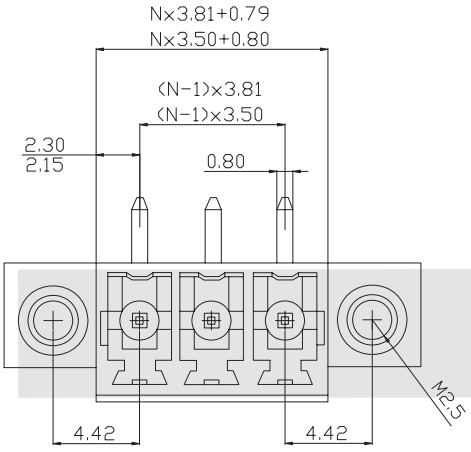

PCB LAYOUT

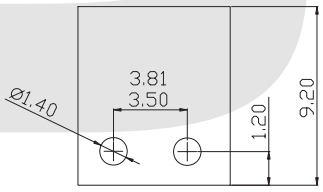

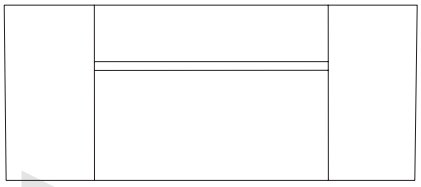

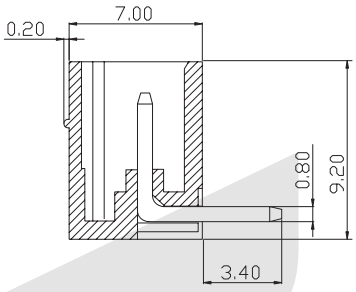

ORDER INFORMATION

Product NO.: KLS2-EDLR-3.50-XXP X X

Pos. NO.
Series No.
Pitch: 3.50=3.50mm 3.81=3.81mm
Number of Pole
Customer Request
Color: 1=Gray 2=Blue 3=Black
4=Green 5=Orange 6=Red
7=Transparent 8=Yellow 9=White

Pluggable Series

KLS2-EDY-3.50/3.81 Series Pitch=3.50mm/3.81mm

Electrical :

Rated voltage: 300V
Rated current: 8A
Contact resistance: 20mΩ
Insulation resistance: 5000MΩ/1000V
Withstanding Voltage: AC2000V/1Min

Material

Pin header: Brass, Tin plated
Housing: PA66, UL94V-0

Mechanical

Temp. Range: -40°C~+105°C
MAX Soldering: +250°C for 5 Sec



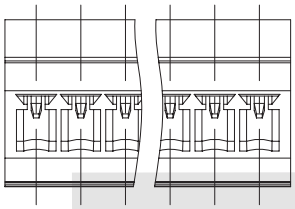

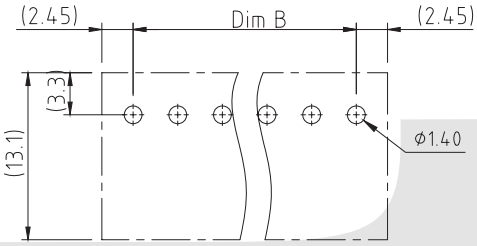

Dim.L = (N-1) x 3.5+4.9
Dim.B = (N-1) x 3.5
N= number of poles

P.C.B LAYOUT

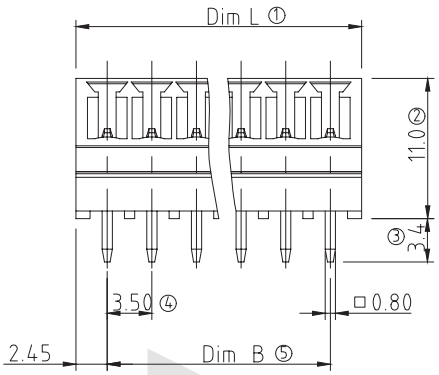

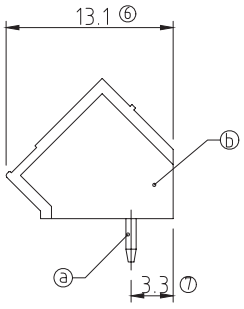

ORDER INFORMATION

Product NO.: KLS2- EDY -3.50-XXP X X

Pos. NO.
Series No.
Pitch: 3.50=3.50mm 3.81=3.81mm
Number of Pole
Customer Request
Color: 1=Gray 2=Blue 3=Black
4=Green 5=Orange 6=Red
7=Transparent 8=Yellow 9=White

Pluggable Series

KLS2-EDLY-3.50/3.81 Series Pitch=3.50mm/3.81mm

Electrical :

Rated voltage: 300V
Rated current: 8A
Contact resistance: 20mΩ
Insulation resistance: 5000MΩ/1000V
Withstanding Voltage: AC2000V/1Min

Material

Pin header: Brass, Tin plated
Housing: PA66, UL94V-0

Mechanical

Temp. Range: -40°C~+105°C
MAX Soldering: +250°C for 5 Sec

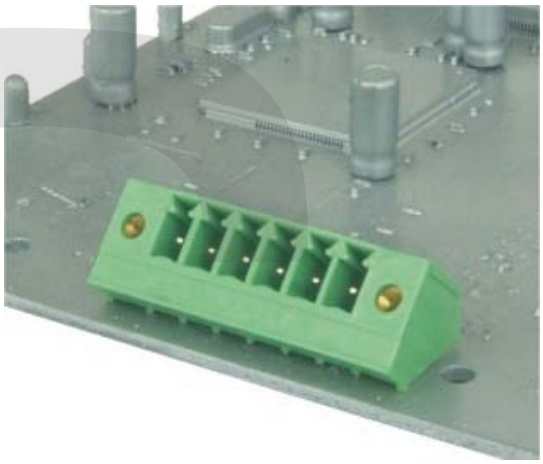

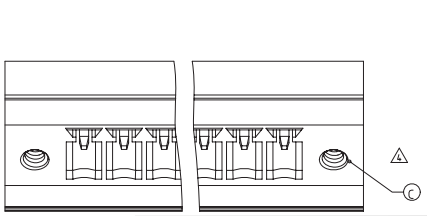

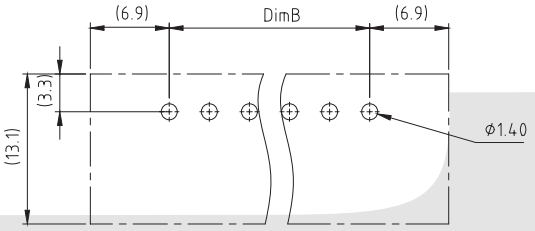

P.C.B LAYOUT

DimA=(N-1)×3.5+13.8
DimB=(N-1)×3.5

N=NUMBER OF CONTACTS

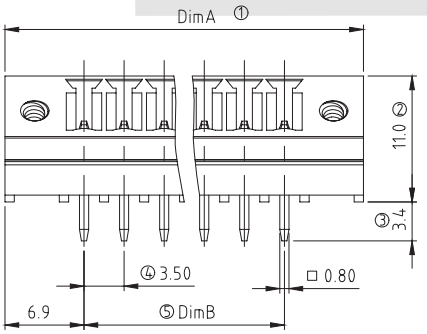

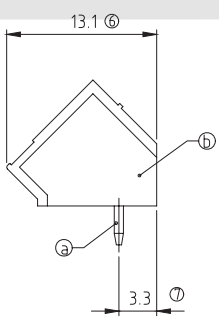

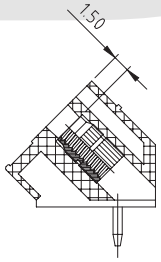

ORDER INFORMATION

Product NO.: KLS2-EDLY-3.50-XXP X X

Pos. NO.
Series No.
Pitch: 3.50=3.50mm 3.81=3.81mm
Number of Pole
Customer Request
Color: 1=Gray 2=Blue 3=Black
4=Green 5=Orange 6=Red
7=Transparent 8=Yellow 9=White

Pluggable Series

KLS2-EDAV-3.50/3.81 Series Pitch=3.50mm/3.81mm

Electrical :
Rated voltage: 300V
Rated current: 8A
Contact resistance: 20mΩ
Insulation resistance: 5000MΩ/1000V
Withstanding Voltage: AC2000V/1Min

Material
Pin header: Brass, Tin plated
Housing: PA66, UL94V-0

Mechanical
Temp. Range: -40°C~+105°C
MAX Soldering: +250°C for 5 Sec

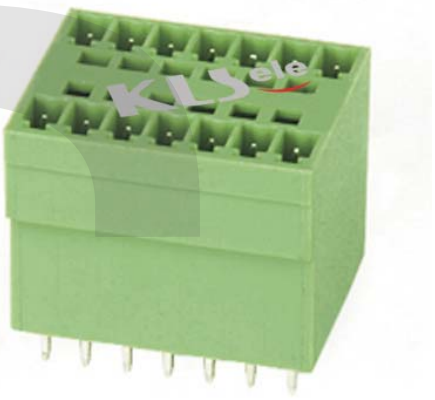

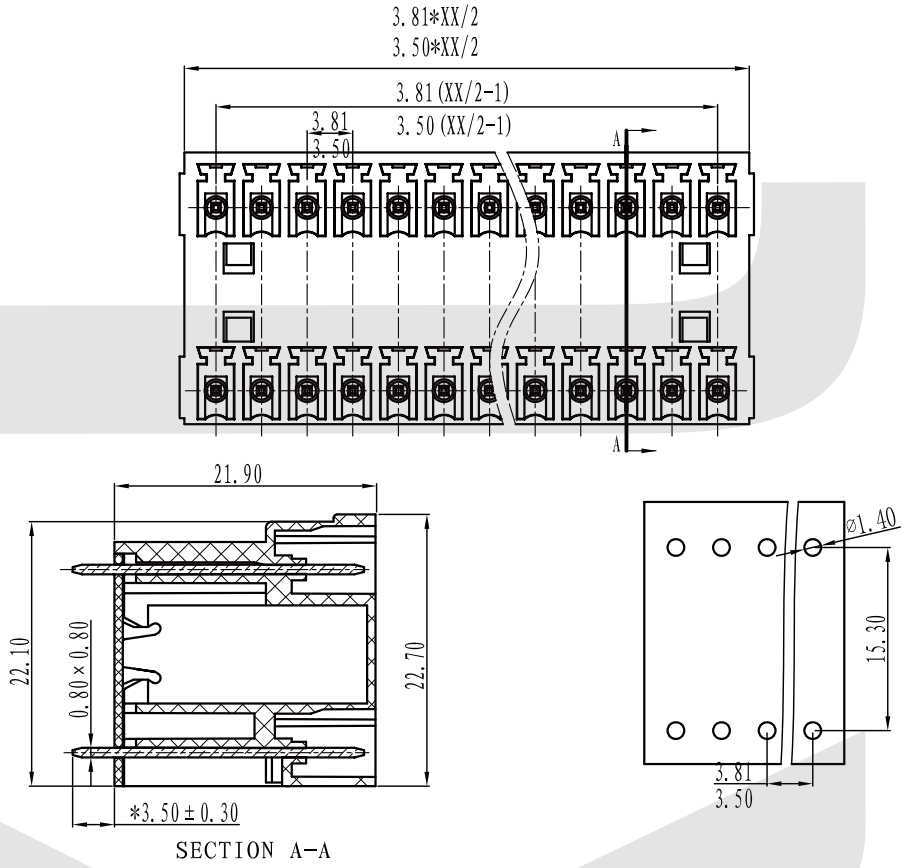

ORDER INFORMATION

Product NO.: KLS2-EDAV-3.50-XXP X X

Pos. NO.
Series No.
Pitch: 3.50=3.50mm 3.81=3.81mm
Number of Pole
Customer Request
Color: 1=Gray 2=Blue 3=Black
4=Green 5=Orange 6=Red
7=Transparent 8=Yellow 9=White

Pluggable Series

KLS2-EDALV-3.50/3.81 Series Pitch=3.50mm/3.81mm

Electrical :
Rated voltage: 300V
Rated current: 8A
Contact resistance: 20mΩ
Insulation resistance: 5000MΩ/1000V
Withstanding Voltage: AC2000V/1Min

Material
Pin header: Brass, Tin plated
Housing: PA66, UL94V-0

Mechanical
Temp. Range: -40°C~+105°C
MAX Soldering: +250°C for 5 Sec

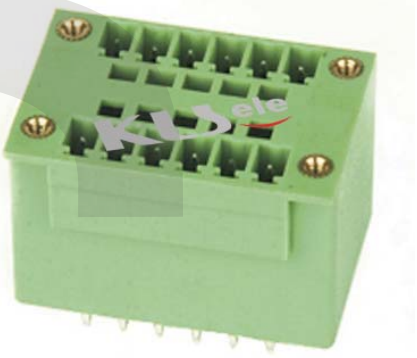

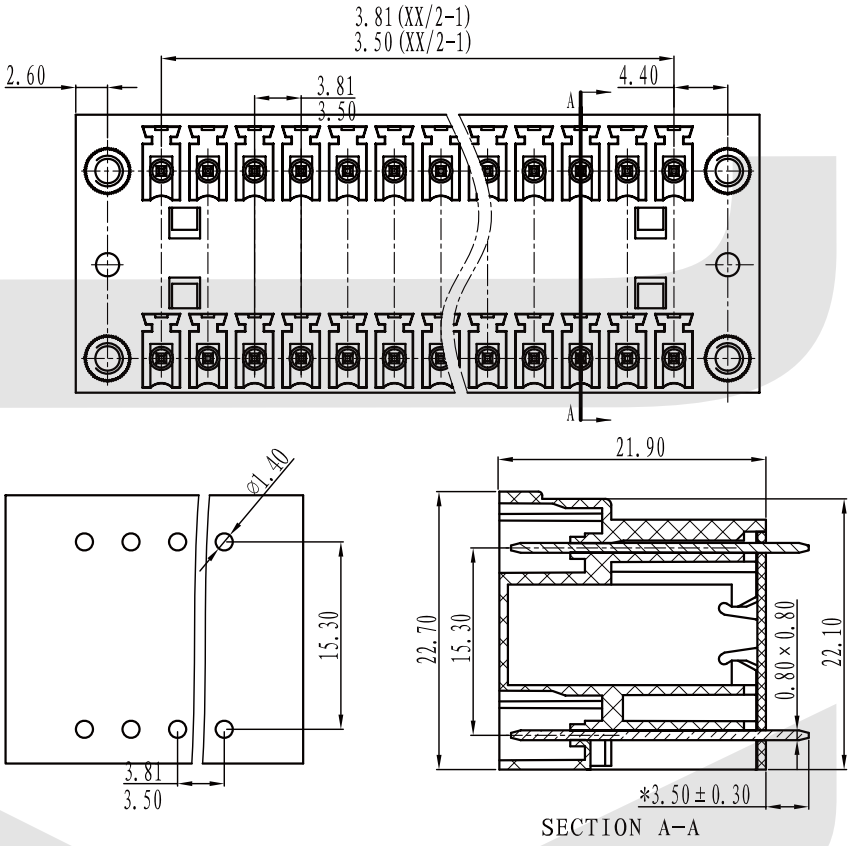

ORDER INFORMATION

Product NO.: KLS2-EDALV-3.50-XXP X X

Pos. NO.
Series No.
Pitch: 3.50=3.50mm 3.81=3.81mm
Number of Pole
Customer Request
Color: 1=Gray 2=Blue 3=Black
4=Green 5=Orange 6=Red
7=Transparent 8=Yellow 9=White

Pluggable Series

KLS2-EDAR-3.50/3.81 Series Pitch=3.50mm/3.81mm

Electrical :
Rated voltage: 300V
Rated current: 8A
Contact resistance: 20mΩ
Insulation resistance: 5000MΩ/1000V
Withstanding Voltage: AC1500V/1Min

Material
Housing: PA66, UL94V-0
Pin header: Brass,Tin plated

Mechanical
Temp. Range: -40°C~+105°C
MAX Soldering: +250°C for 5 Sec



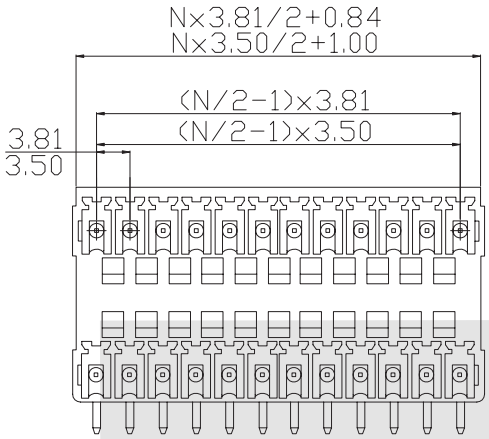

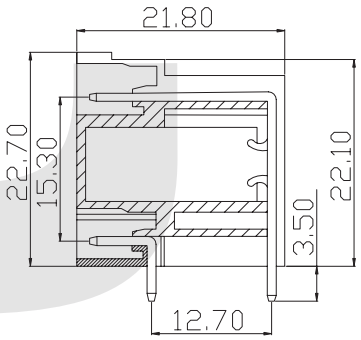

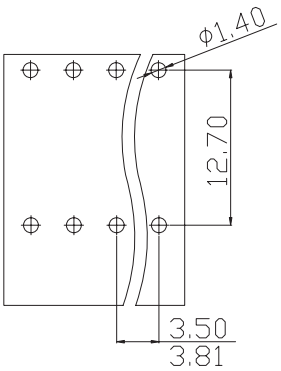

PCB LAYOUT

ORDER INFORMATION

Product NO.: KLS2-EDAR-3.50-XXP X X

Pos. NO.
Series No.
Pitch: 3.50=3.50mm 3.81=3.81mm
Number of Pole
Customer Request
Color: 1=Gray 2=Blue 3=Black
4=Green 5=Orange 6=Red
7=Transparent 8=Yellow 9=White

Pluggable Series

KLS2-EDALR-3.50/3.81 Series Pitch=3.50mm/3.81mm

Electrical :

Rated voltage: 300V
Rated current: 8A
Contact resistance: 20mΩ
Insulation resistance: 5000MΩ/1000V
Withstanding Voltage: AC2000V/1Min

Material

Pin header: Brass, Tin plated
Housing: PA66, UL94V-0

Mechanical

Temp. Range: -40°C~+105°C
MAX Soldering: +250°C for 5 Sec



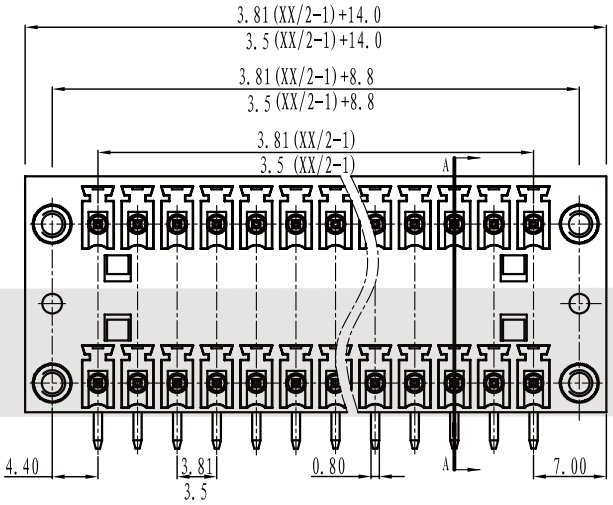

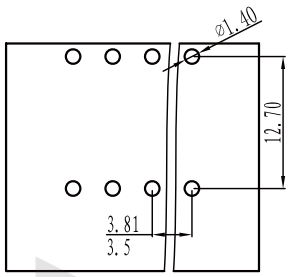

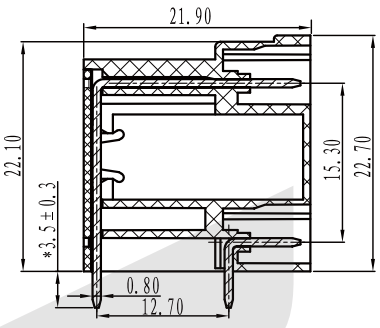

ORDER INFORMATION

Product NO.: KLS2-EDALR-3.50-XXP X X

Pos. NO.
Series No.
Pitch: 3.50=3.50mm 3.81=3.81mm
Number of Pole
Customer Request
Color: 1=Gray 2=Blue 3=Black
4=Green 5=Orange 6=Red
7=Transparent 8=Yellow 9=White

Pluggable Series

KLS2-EDBV-3.50/3.81 Series Pitch=3.50mm/3.81mm

Electrical :

Rated voltage: 300V
Rated current: 8A
Contact resistance: 20mΩ
Insulation resistance: 5000MΩ/1000V
Withstanding Voltage: AC2000V/1Min

Material

Pin header: Brass, Tin plated
Housing: PA66, UL94V-0

Mechanical

Temp. Range: -40°C~+105°C
MAX Soldering: +250°C for 5 Sec

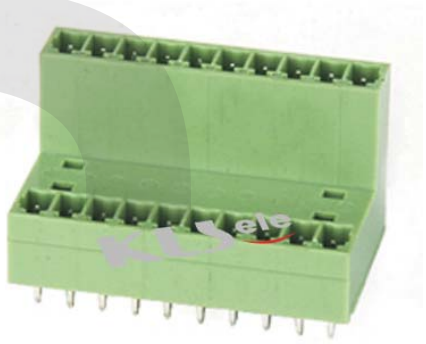

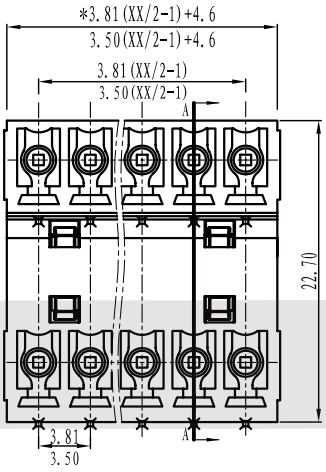

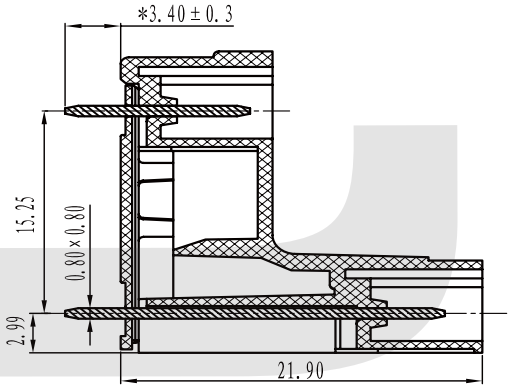

SECTION A-A

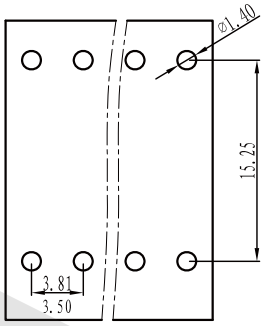

ORDER INFORMATION

Product NO.: KLS2-EDBV-3.50-XXP X X

Pos. NO.
Series No.
Pitch: 3.50=3.50mm 3.81=3.81mm
Number of Pole
Customer Request
Color: 1=Gray 2=Blue 3=Black
4=Green 5=Orange 6=Red
7=Transparent 8=Yellow 9=White

Pluggable Series

KLS2-EDBR-3.50/3.81 Series Pitch=3.50mm/3.81mm

Electrical :

Rated voltage: 300V
Rated current: 8A
Contact resistance: 20mΩ
Insulation resistance: 5000MΩ/1000V
Withstanding Voltage: AC2000V/1Min

Material

Pin header: Brass, Tin plated
Housing: PA66, UL94V-0

Mechanical

Temp. Range: -40°C~+105°C
MAX Soldering: +250°C for 5 Sec



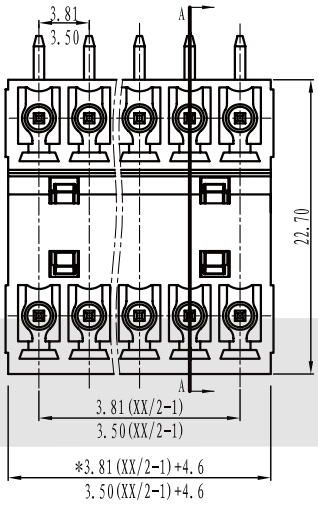

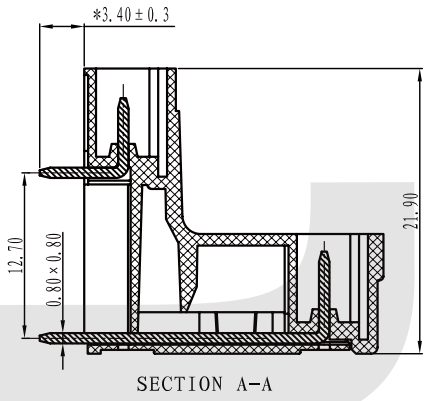

SECTION A-A

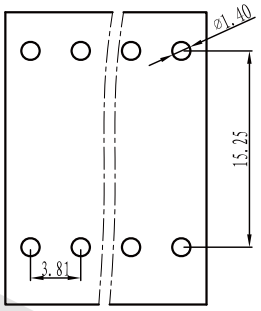

ORDER INFORMATION

Product NO.: KLS2-EDBR-3.50-XXP X X

Pos. NO.
Series No.
Pitch: 3.50=3.50mm 3.81=3.81mm
Number of Pole
Customer Request
Color: 1=Gray 2=Blue 3=Black
4=Green 5=Orange 6=Red
7=Transparent 8=Yellow 9=White

Pluggable Series

KLS2-EDK-3.96 Series Pitch=3.96mm

Electrical :

Rated voltage: 300V
Rated current: 10A
Contact resistance: 20mΩ
Insulation resistance: 5000MΩ/1000V
Withstanding Voltage: AC2000V/1Min
Wire range: 28-12AWG 2.5mm²

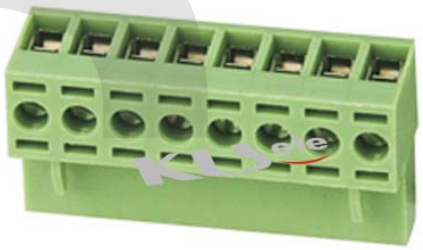

Material

Screws: M2.5 steel Zinc plated
Contact: Phosphor bronze
Housing: PA66, UL94V-0

Mechanical

Temp. Range: -40°C~+105°C
MAX Soldering: +250°C for 5 Sec.
Torque: 0.4Nm (3.6lb.in)
Strip length: 7-8mm

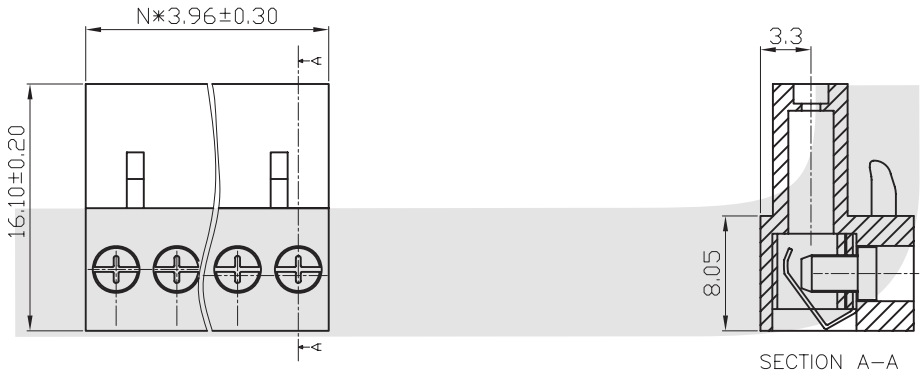

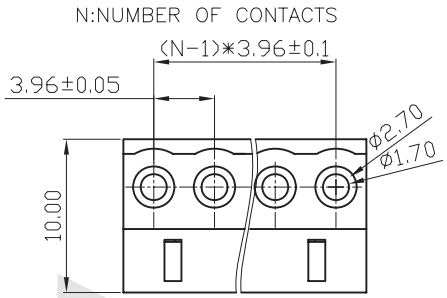

ORDER INFORMATION

Product NO.: KLS2-EDK-3.96-XXP X X X

- Pos. NO.
- Series No.
- Pitch 3.96=3.96mm
- Number of Pole
- Customer Request
- Screw: C=Cross Screw, S=Slot Screw
- Color: 1=Gray, 2=Blue, 3=Black, 4=Green, 5=Orange, 6=Red, 7=Transparent, 8=Yellow, 9=White

Pluggable Series

KLS2-EDR-3.96 Series Pitch=3.96mm

Electrical :
Rated voltage: 300V
Rated current: 15A
Contact resistance: 20mΩ
Insulation resistance: 5000MΩ/1000V
Withstanding Voltage: AC1500V/1Min



Material
Pin header: Brass, Tin plated
Housing: PA66, UL94V-0

Mechanical
Temp. Range: -40°C~+130°C
MAX Soldering: +250°C for 5 Sec.

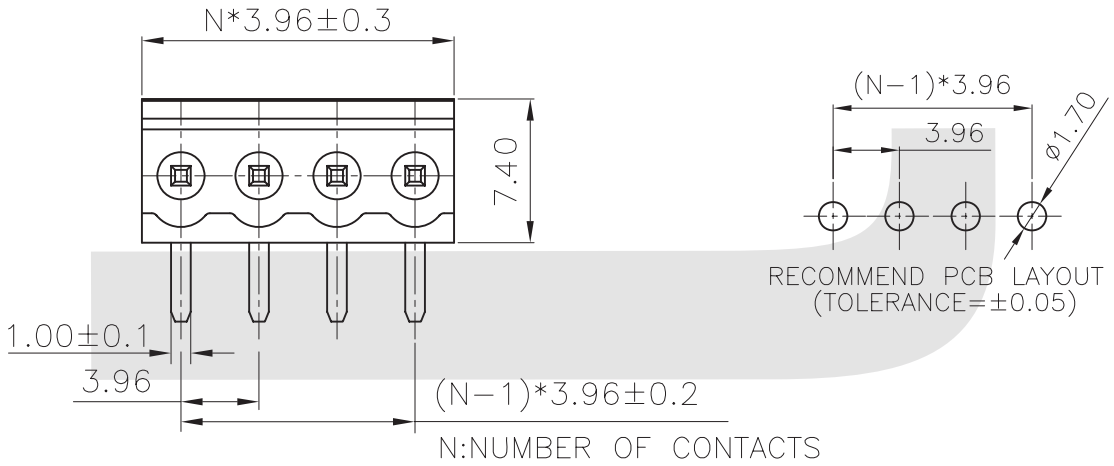

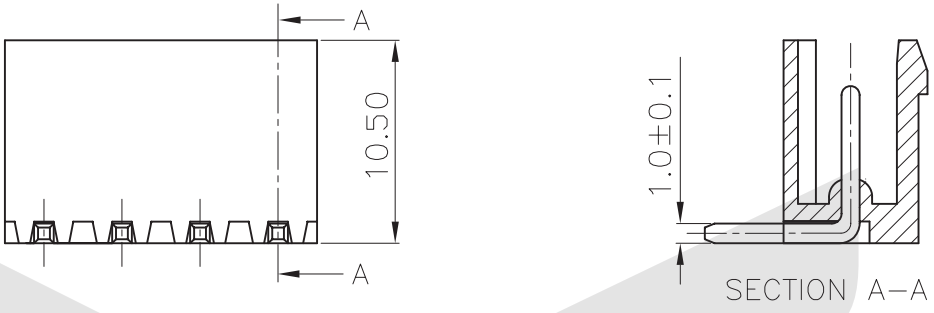

ORDER INFORMATION

Product NO.: KLS2-EDR-3.96-XXP X X

Pos. NO.
Series No.
Pitch: 3.96=3.96mm
Number of Pole
Customer Request
Color: 1=Gray 2=Blue 3=Black
4=Green 5=Orange 6=Red
7=Transparent 8=Yellow 9=White

Pluggable Series

KLS2-EDV-3.96 Series Pitch=3.96mm

Electrical :
Rated voltage: 300V
Rated current: 15A
Contact resistance: 20mΩ
Insulation resistance: 5000MΩ/1000V
Withstanding Voltage: AC1500V/1Min
Wire range: 28-12AWG 2.5mm²

Material
Pin header: Brass, Tin plated
Housing: PA66, UL94V-0

Mechanical
Temp. Range: -40°C~+130°C
MAX Soldering: +250°C for 5 Sec.

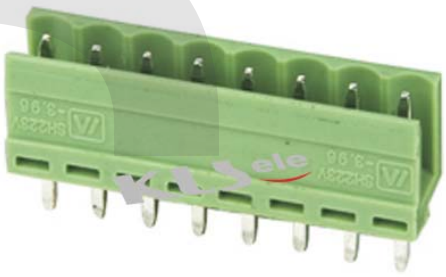

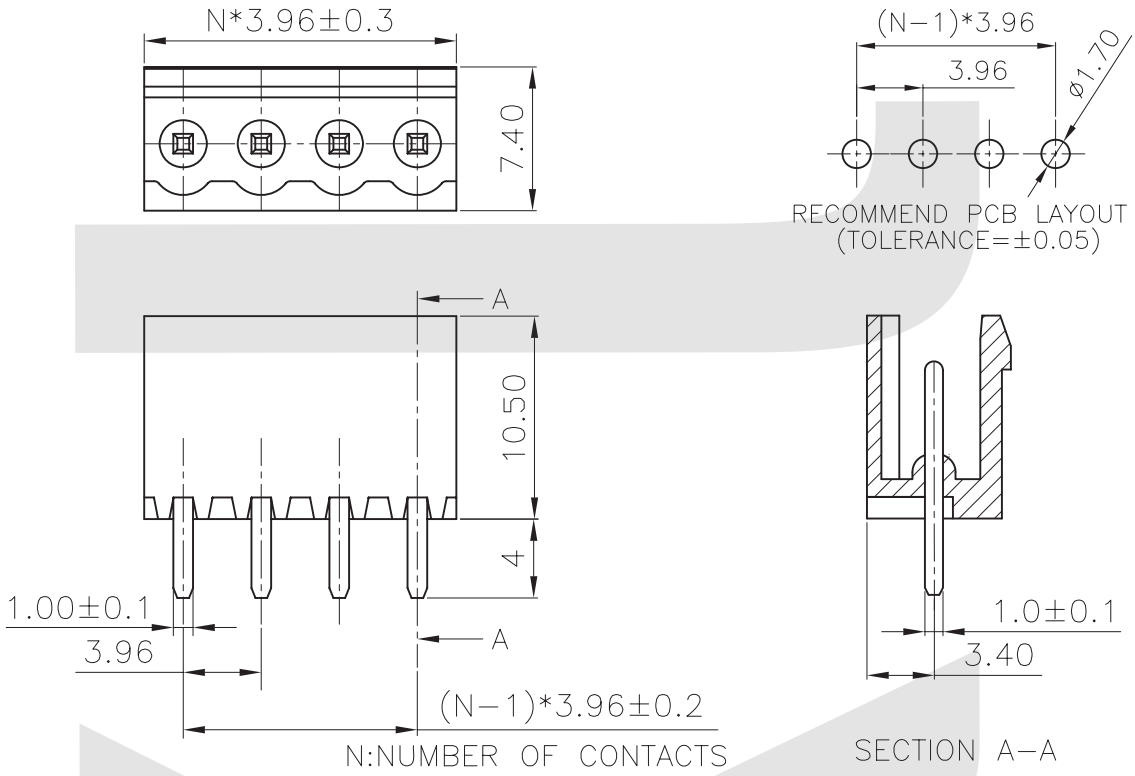

ORDER INFORMATION

Product NO.: KLS2-EDV-3.96-XXP X X

- Pos. NO.
- Series No.
- Pitch : 3.96=3.96mm
- Number of Pole
- Customer Request
- Color: 1=Gray 2=Blue 3=Black 4=Green 5=Orange 6=Red 7=Transparent 8=Yellow 9=White

Pluggable Series

KLS2-EDK-5.00/5.08 Series Pitch=5.00mm/5.08mm

Electrical :

Rated voltage: 300V
Rated current: 15A
Contact resistance: 20mΩ
Insulation resistance: 5000MΩ/DC1000V
Withstanding Voltage: AC2000V/1Min
Wire range: 28-12AWG 2.5mm²



Material

Contact: Phosphor broze
Screws: M2.5,steel,Zinc plated
Housing: PA66, UL94V-0

Mechanical

Temp. Range: -40°C~+105°C
Torque: 0.4Nm(3.6Lb.in)
Strip length: 7-8mm

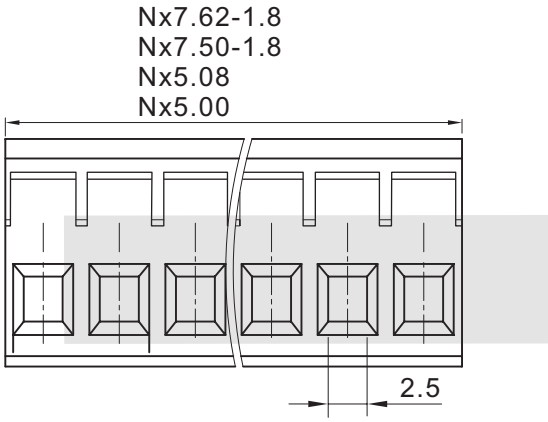

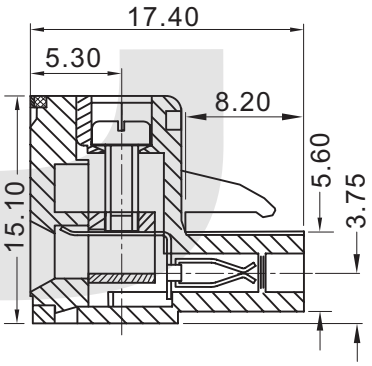

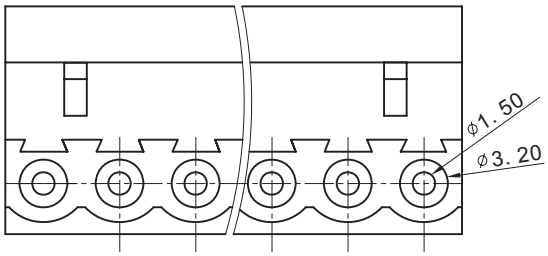

ORDER INFORMATION

Product NO.: KLS2-EDK-5.00-XXP X X X

- Pos. NO.
- Series No.
- Pitch 5.00=5.00mm 5.08=5.08mm
  7.50=7.50mm 7.62=7.62mm
- Number of Pole
- Customer Request
- Screw: C=Cross Screw
  S=Slot Screw
- Color: 1=Gray 2=Blue 3=Black
  4=Green 5=Orange 6=Red
  7=Transparent 8=Yellow 9=White

Pluggable Series

KLS2-EDCKM-5.00/5.08 Series Pitch=5.00mm/5.08mm

Electrical :

Rated voltage: 300V
Rated current: 15A
Contact resistance: 20mΩ
Insulation resistance: 5000MΩ/DC1000V
Withstanding Voltage: AC2000V/1Min
Wire range: 28-12AWG 2.5mm²

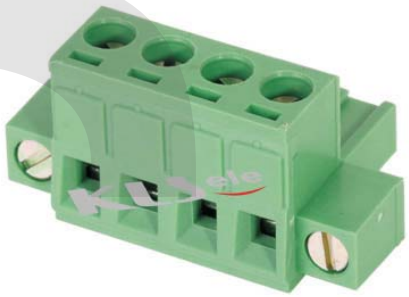

Material

Contact: Phosphor broze
Screws: M2.5,steel,Zinc plated
Housing: PA66, UL94V-0

Mechanical

Temp. Range: -40ºC~+105ºC
Torque: 0.4Nm(3.6Lb.in)
Strip length: 7-8mm

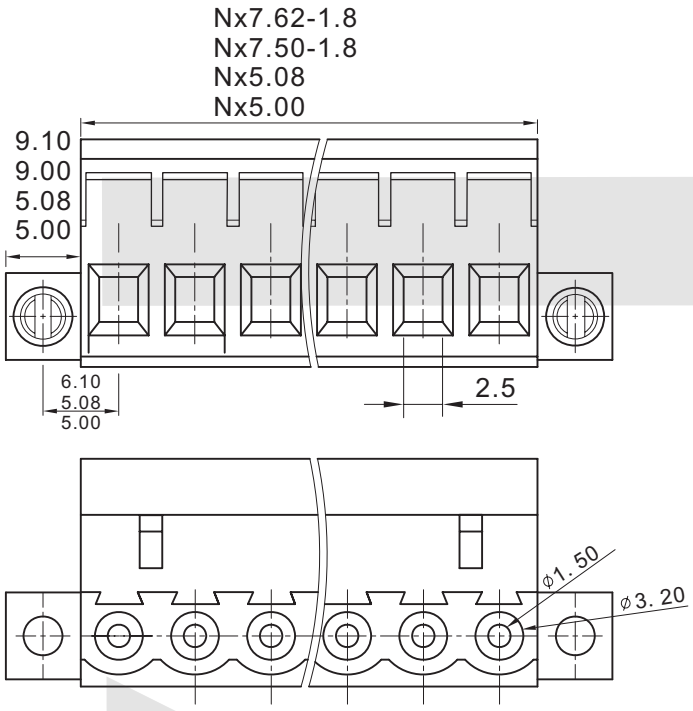

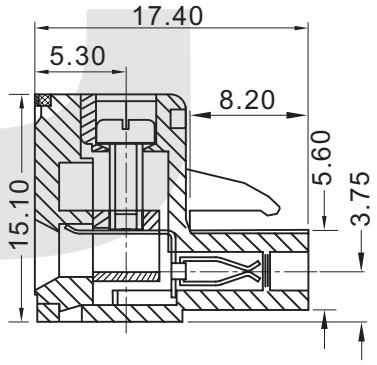

ORDER INFORMATION

Product NO.: KLS2-EDCKM-5.00-XXP X X X

- Pos. NO.
- Series No.
- Pitch 5.00=5.00mm 5.08=5.08mm
  7.50=7. 50mm 762=7. 62mm
- Number of Pole
- Color: 1=Gray 2=Blue 3=Black
  4=Green 5=Orange 6=Red
  7=Transparent 8=Yellow 9=White
- Screw: C=Cross Screw
  S=Slot Screw
- Customer Request

Pluggable Series

KLS2-EDKF-5.08 Series Pitch=5.08mm

Electrical :

Rated voltage: 300V
Rated current: 10A
Contact resistance: 20mΩ
Insulation resistance: 5000MΩ/1000V
Withstanding Voltage: AC2000V/1Min
Wire range: 28-12AWG 2.5mm²



Material

Screws: M2.5 steel Zinc plated
Contact: Phosphor bronze
Housing: PA66, UL94V-0

Mechanical

Temp. Range: -40°C~+105°C
MAX Soldering: +250°C for 5 Sec.
Torque: 0.4Nm (3.6lb.in)
Strip length: 7-8mm

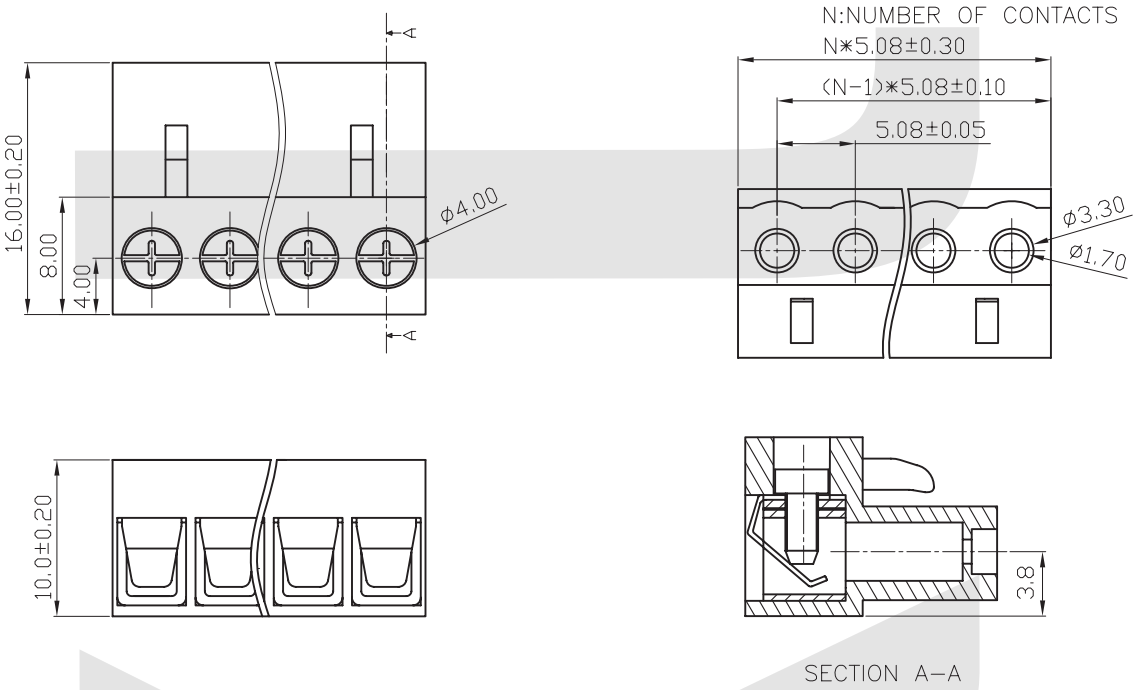

ORDER INFORMATION

Product NO.: KLS2-EDKF-5.08-XXP X X X

- Pos. NO.
- Series No.
- Pitch 5.08=5.08mm
- Number of Pole
- Customer Request
- Screw: C=Cross Screw, S=Slot Screw
- Color: 1=Gray, 2=Blue, 3=Black, 4=Green, 5=Orange, 6=Red, 7=Transparent, 8=Yellow, 9=White

Pluggable Series

KLS2-EDKAM-5.00/5.08 Series Pitch=5.00mm/5.08mm

Electrical :

Rated voltage: 300V
Rated current: 15A
Contact resistance: 20mΩ
Insulation resistance: 5000MΩ/1000V
Withstanding Voltage: AC1500V/1Min

Material

Housing: Pa66, UL94V-0
Screws: M2.5,steel,Zinc plated
Contact :Phosphor Bronze

Mechanical

Temp. Range: -40°C~+105°C
MAX Soldering: +250°C for 5 Sec
Wire range: 28-12AWG 2.5mm²
Torque:0.4Nm (3.6Lb. in)
Strip length: 7-8 mm



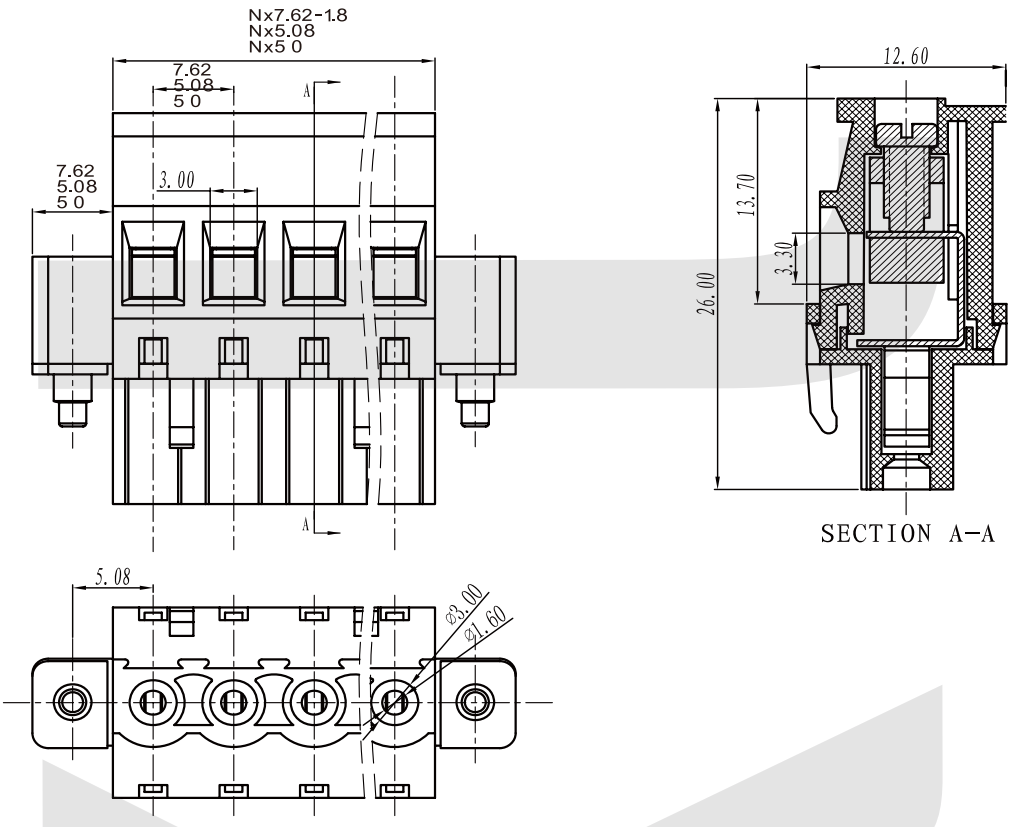

ORDER INFORMATION

Product NO.: KLS2-EDKAM-5.00-XXP X X X

- Pos. NO.
- Series No.
- Pitch: 5.00=5.00mm 5.08=5.08mm
  7.62=7.62mm
- Number of Pole
- Customer Request
- Screw: C=Cross Screw
  S=Slot Screw
- Color: 1=Gray 2=Blue 3=Black
  4=Green 5=Orange 6=Red
  7=Transparent 8=Yellow 9=White

Pluggable Series

KLS2-EDKA Pitch: 5.00 and 5.08mm



Electrical :
Rated voltage: 300V
Rated current: 15A
Contact resistance: 20mΩ
Insulation resistance: 5000MΩ/1000V
Withstanding Voltage: AC1500V/1Min

Material
Housing: Pa66, UL94V-0
Screws: M2.5,steel,Zinc plated
Contact :Phosphor Bronze

Mechanical
Temp. Range: -40ºC~+105ºC
MAX Soldering: +250ºC for 5 Sec
Wire range: 28-12AWG 2.5mm²
Torque:0.4Nm (3.6Lb. in)
Strip length: 7-8 mm

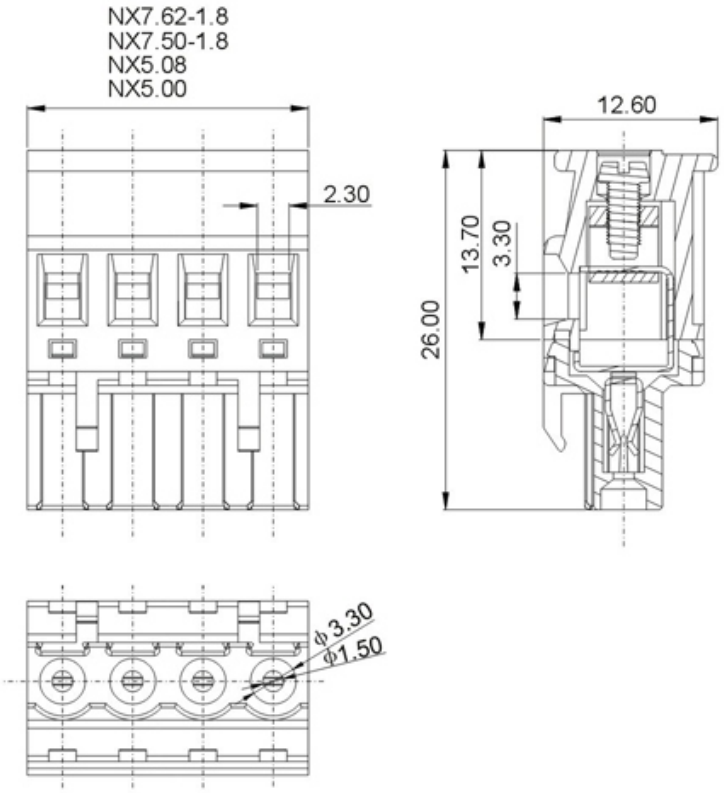

ORDER INFORMATION

Product NO.: KLS2-EDKA-5.00-XXP X X X

- Pos. NO.
- Series No.
- Pitch: 5.00=5.00mm 5.08=5.08mm 7.62=7.62mm
- Number of Pole
- Customer Request
- Screw: C=Cross Screw S=Slot Screw
- Color: 1=Gray 2=Blue 3=Black 4=Green 5=Orange 6=Red 7=Transparent 8=Yellow 9=White

Pluggable Series

KLS2-EDKB-5.00/5.08 Series Pitch=5.00mm/5.08mm

Electrical :

Rated voltage: 300V
Rated current: 15A
Contact resistance: 20mΩ
Insulation resistance: 5000MΩ/1000V
Withstanding Voltage: AC1500V/1Min

Material

Housing: Pa66, UL94V-0
Screws: M2.5,steel,Zinc plated
Contact :Phosphor Bronze

Mechanical

Temp. Range: -40°C~+105°C
MAX Soldering: +250°C for 5 Sec
Wire range: 28-12AWG 2.5mm²
Torque:0.4Nm (3.6Lb. in)
Strip length: 7-8 mm



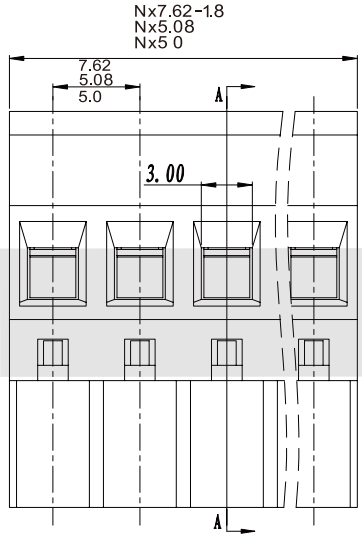

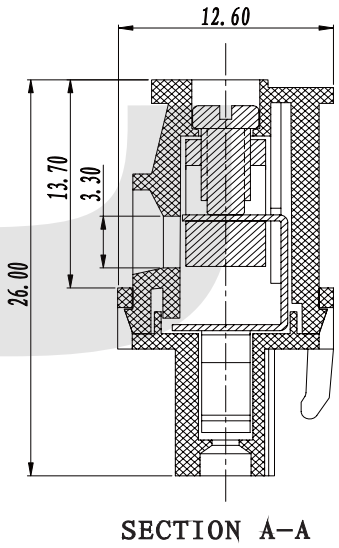

SECTION A-A

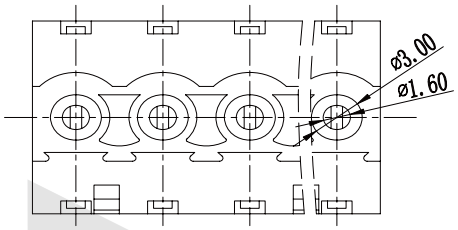

ORDER INFORMATION

Product NO.: KLS2-EDKB-5.00-XXP X X X

Pos. NO.
Series No.
Pitch: 5.00=5.00mm 5.08=5.08mm
7.62=7.62mm
Number of Pole
Customer Request
Screw: C=Cross Screw
S=Slot Screw
Color: 1=Gray 2=Blue 3=Black
4=Green 5=Orange 6=Red
7=Transparent 8=Yellow 9=White

Pluggable Series

KLS2-EDKBM-5.00/5.08 Series Pitch=5.00mm/5.08mm

Electrical :

Rated voltage: 300V
Rated current: 15A
Contact resistance: 20mΩ
Insulation resistance: 5000MΩ/1000V
Withstanding Voltage: AC2000V/1Min



Material

Housing: PA66, UL94V-0
Screws: M2.5,steel,Zinc plated
Contact: Phosphor Bronze

Mechanical

Temp. Range: -40°C~+105°C
Wire range:26-12AWG 2.5mm²
Torque: 0.4Nm(3.6Lb.in)
Strip length: 7-8mm

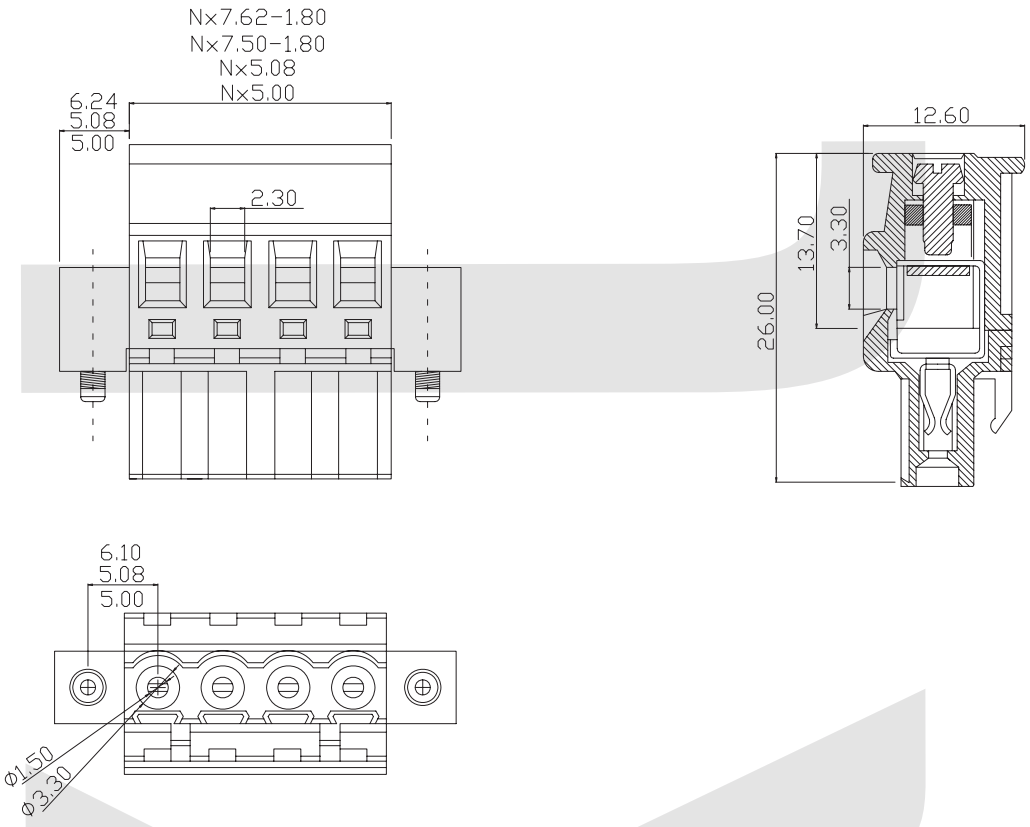

ORDER INFORMATION

Product NO.: KLS2-EDKBM-5.00-XXP X X X

- Pos. NO.
- Series No.
- Pitch: 5.00=5.00mm 5.08=5.08mm
  7.50=7.50mm 7.62=7.62mm
- Number of Pole
- Customer Request
- Screw: C=Cross Screw
  S=Slot Screw
- Color: 1=Gray 2=Blue 3=Black
  4=Green 5=Orange 6=Red
  7=Transparent 8=Yellow 9=White

Pluggable Series

KLS2-EDKC-5.08/5.00 Series Pitch=5.08mm/5.00mm

Electrical :

Rated voltage: 300V
Rated current: 15A
Contact resistance: 20mΩ
Insulation resistance: 5000MΩ/1000V
Withstanding Voltage: AC1500V/1Min



Material

Housing: PA66, UL94V-0
Screws: M2.5,steel,Zinc plated
Contact: Phosphor Bronze

Mechanical

Temp. Range: -40ºC~+105ºC
MAX Soldering: +250ºC for 5 Sec
Wire range:28-12AWG 2.5mm²
Torque: 0.4Nm(3.6Lb.in)
Strip length: 7-8mm

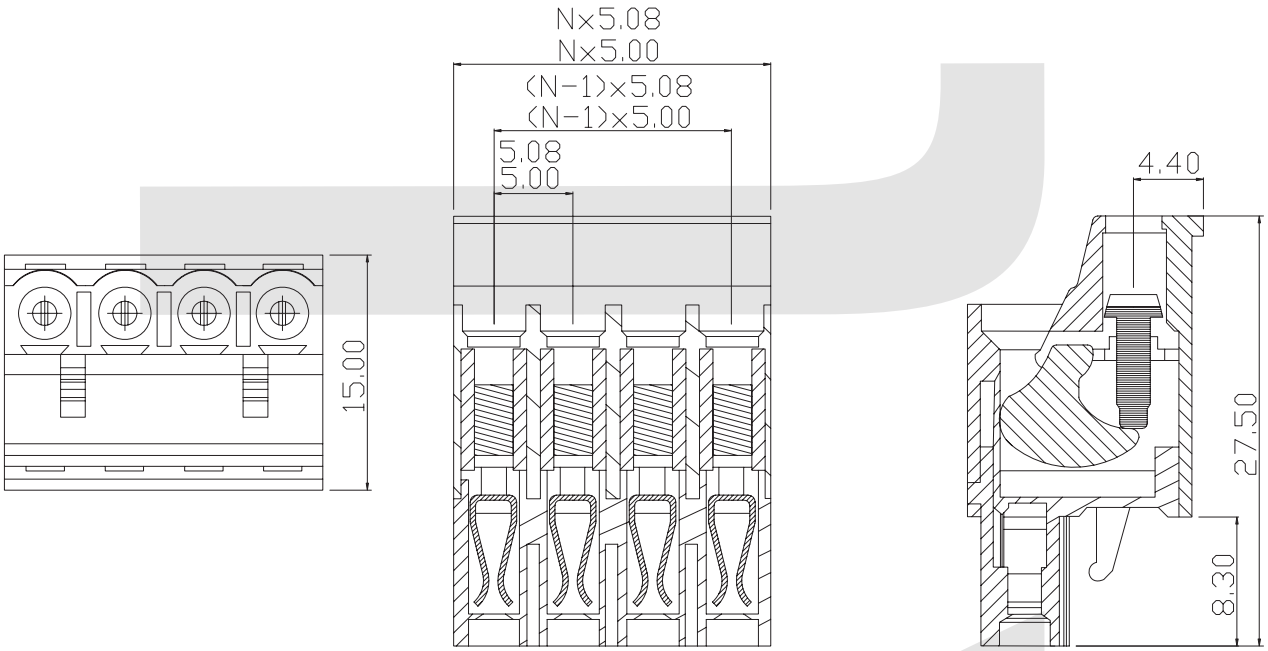

ORDER INFORMATION

Product NO.: KLS2-EDKC-5.00-XXP X X X

- Pos. NO.
- Series No.
- Pitch: 5.00=5.00mm 5.08=5.08mm
- Number of Pole
- Customer Request
- Screw: C=Cross Screw, S=Slot Screw
- Color: 1=Gray, 2=Blue, 3=Black, 4=Green, 5=Orange, 6=Red, 7=Transparent, 8=Yellow, 9=White

Pluggable Series

KLS2-EDKD-5.00/5.08 Series Pitch=5.00mm/5.08mm

Electrical :
Rated voltage: 300V
Rated current: 10A
Contact resistance: 20mΩ
Insulation resistance: 5000MΩ/1000V
Withstanding Voltage: AC2000V/1Min

Material
Housing: PA66, UL94V-0
Contact: Stainless steel

Mechanical
Temp. Range: -40ºC~+105ºC
Wire range:26-12AWG 2.5mm²
Strip length: 10-11mm



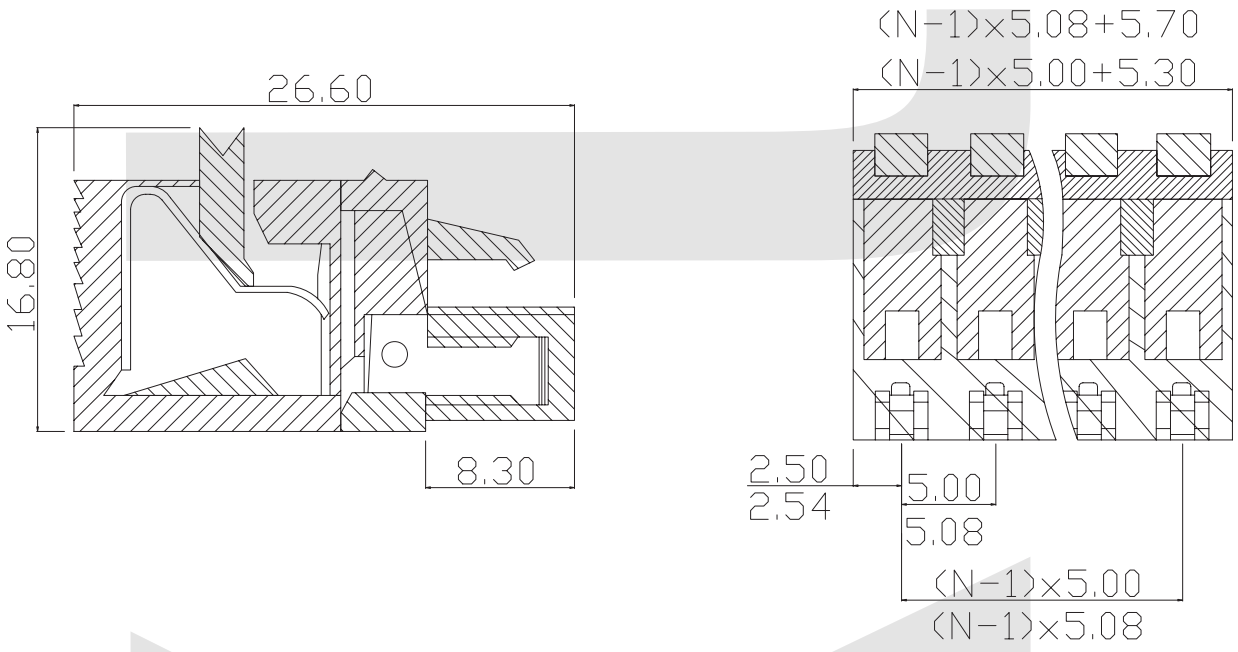

ORDER INFORMATION

Product NO.: KLS2-EDKD-5.00-XXP X X

Pos. NO.
Series No.
Pitch: 5.00=5.00mm 5.08=5.08mm
Number of Pole
Customer Request
Color: 1=Gray 2=Blue 3=Black
4=Green 5=Orange 6=Red
7=Transparent 8=Yellow 9=White

Pluggable Series

KLS2-EDKDM-5.00/5.08 Series Pitch=5.00mm/5.08mm

Electrical :

Rated voltage: 300V
Rated current: 15A
Contact resistance: 20mΩ
Insulation resistance: 5000MΩ/1000V
Withstanding Voltage: AC1500V/1Min



Material

Housing: Pa66, UL94V-0
Screws: M2.5,steel,Zinc plated
Contact :Phosphor Bronze

Mechanical

Temp. Range: -40°C~+105°C
MAX Soldering: +250°C for 5 Sec
Wire range: 28-12AWG 2.5mm²
Torque:0.4Nm (3.6Lb. in)
Strip length: 7-8 mm

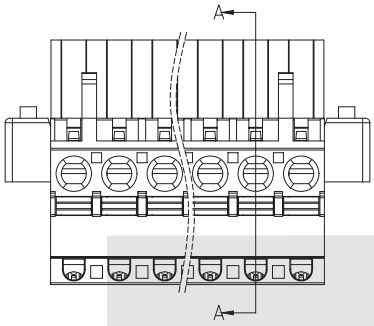

Dimension

DIM A	N×5.0+0.10
DIM B	(N-1)×5.0

N=Number of poles

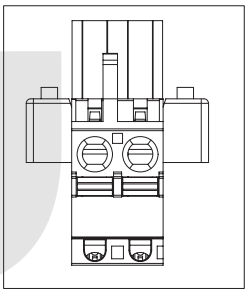

2P

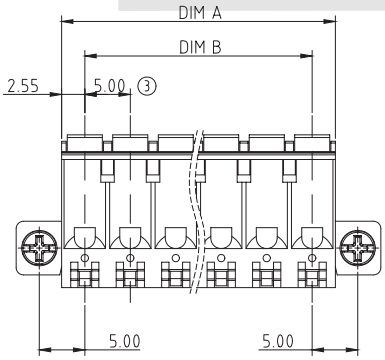

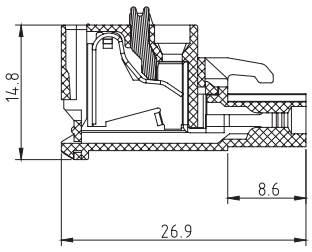

SECTION A-A

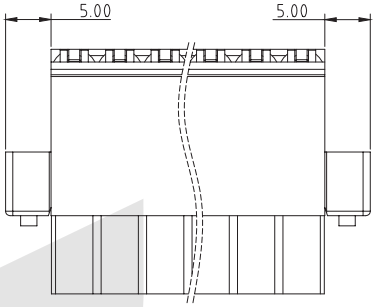

ORDER INFORMATION

Product NO.: KLS2-EDKDM-5.00-XXP X X

Pos. NO.
Series No.
Pitch: 5.00=5.00mm 5.08=5.08mm
7.62=7.62mm
Number of Pole
Customer Request
Color: 1=Gray 2=Blue 3=Black
4=Green 5=Orange 6=Red
7=Transparent 8=Yellow 9=White

Pluggable Series

KLS2-EDKE-5.00/5.08 Series Pitch=5.00mm/5.08mm

Electrical :
Rated voltage: 300V
Rated current: 10A
Contact resistance: 20mΩ
Insulation resistance: 5000MΩ/1000V
Withstanding Voltage: AC2000V/1Min

Material
Housing: PA66, UL94V-0
Contact: Phosphor Bronze

Mechanical
Temp. Range: -40°C~+105°C
Wire range:28-12AWG 2.5mm²
Strip length: 10-16mm



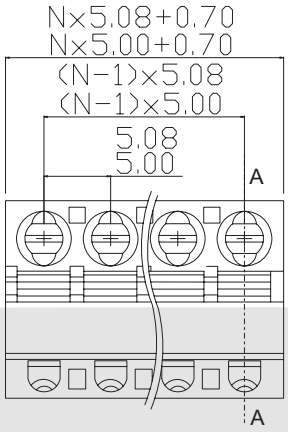

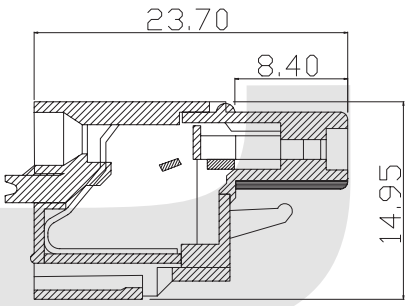

SECTION A-A

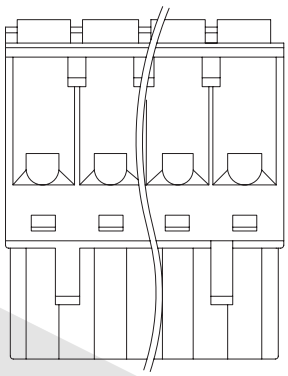

ORDER INFORMATION

Product NO.: KLS2-EDKE-5.00-XXP X X

Pos. NO.
Series No.
Pitch: 5.00=5.00mm 5.08=5.08mm
Number of Pole
Customer Request
Color: 1=Gray 2=Blue 3=Black
4=Green 5=Orange 6=Red
7=Transparent 8=Yellow 9=White

Pluggable Series

KLS2-EDKEM-5.00/5.08 Series Pitch=5.00mm/5.08mm

Electrical :

Rated voltage: 300V
Rated current: 15A
Contact resistance: 20mΩ
Insulation resistance: 5000MΩ/1000V
Withstanding Voltage: AC1500V/1Min



Material

Housing: Pa66, UL94V-0
Screws: M2.5,steel,Zinc plated
Contact :Phosphor Bronze

Mechanical

Temp. Range: -40°C~+105°C
MAX Soldering: +250°C for 5 Sec
Wire range: 28-12AWG 2.5mm²
Torque:0.4Nm (3.6Lb. in)
Strip length: 7-8 mm

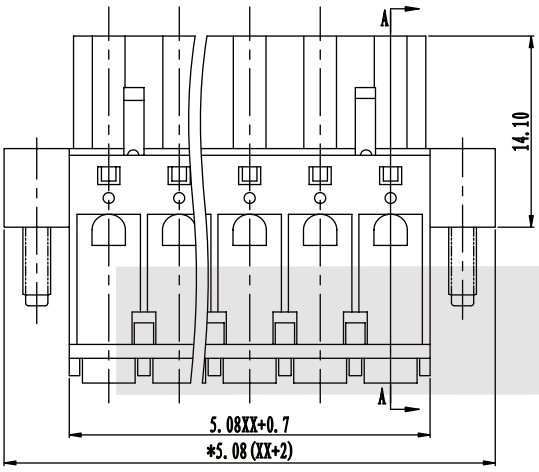

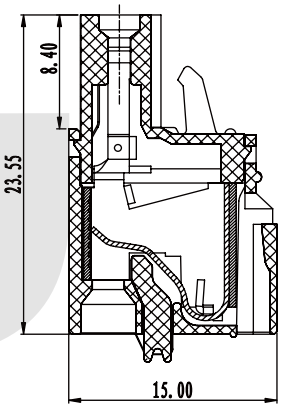

SECTION A-A

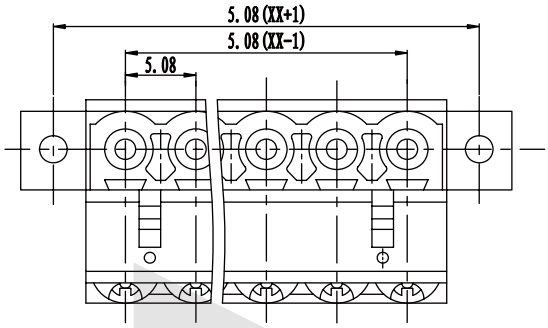

ORDER INFORMATION

Product NO.: KLS2-EDKEM-5.00-XXP X X

Pos. NO.
Series No.
Pitch: 5.00=5.00mm 5.08=5.08mm
Number of Pole
Customer Request
Color: 1=Gray 2=Blue 3=Black
4=Green 5=Orange 6=Red
7=Transparent 8=Yellow 9=White

Pluggable Series

KLS2-EDV-5.00/5.08 Series Pitch=5.00mm/5.08mm

Electrical :
Rated voltage: 300V
Rated current: 15A
Contact resistance: 20mΩ
Insulation resistance: 5000MΩ/1000V
Withstanding Voltage: AC1500V/1Min

Material
Pin header: Brass, Tin plated
Housing: PA66, UL94V-0

Mechanical
Temp. Range: -40°C~+105°C
MAX Soldering: +250°C for 5 Sec

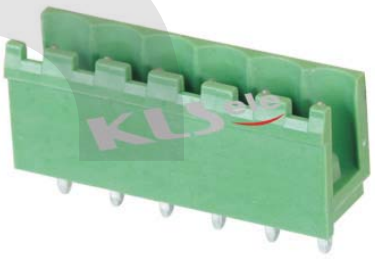

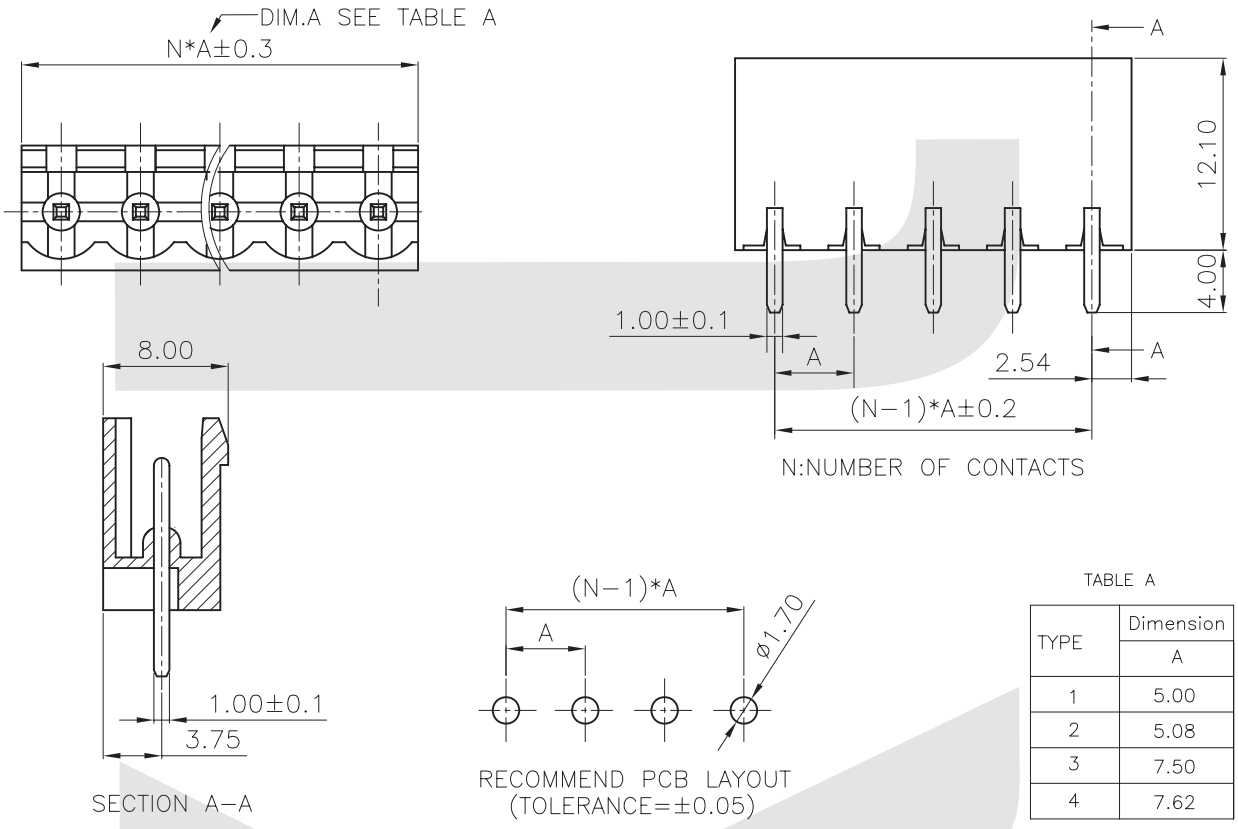

TABLE A

TYPE	Dimension
	A
1	5.00
2	5.08
3	7.50
4	7.62

ORDER INFORMATION

Product NO.: KLS2-EDV-5.00-XXP X X

Pos. NO.
Series No.
Pitch: 5.00=5.00mm 5.08=5.08mm
7.50=7.50mm 7.62=7.62mm
Number of Pole
Customer Request
Color: 1=Gray 2=Blue 3=Black
4=Green 5=Orange 6=Red
7=Transparent 8=Yellow 9=White

II

Pluggable Series

KLS2-EDR-5.00/EDR-5.08 Series Pitch=5.00mm/5.08mm

Electrical :
Rated voltage: 300V
Rated current: 15A
Contact resistance: 20mΩ
Insulation resistance: 5000MΩ/1000V
Withstanding Voltage: AC1500V/1Min



Material
Pin header: Brass, Tin plated
Housing: PA66, UL94V-0

Mechanical
Temp. Range: -40°C~+105°C
MAX Soldering: +250°C for 5 Sec

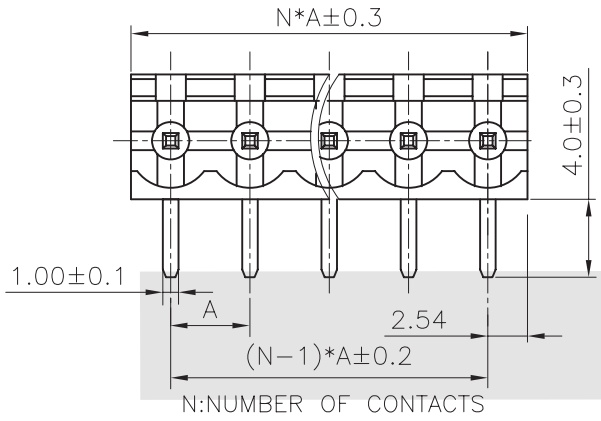

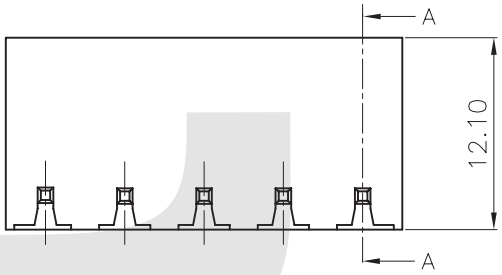

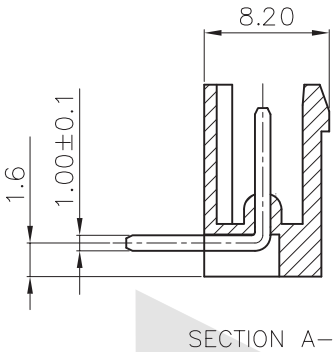

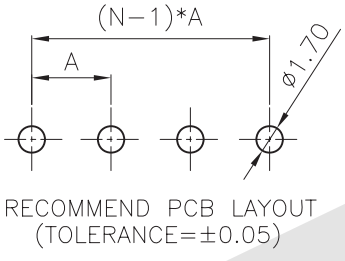

TABLE A

TYPE	Dimension A
1	5.00
2	5.08
3	7.50
4	7.62

ORDER INFORMATION

Product NO.: KLS2-EDR-5.00-XXP X X

Pos. NO.
Series No.
Pitch: 5.00=5.00mm 5.08=5.08mm
7.50=7.50mm 7.62=7.62mm
Number of Pole
Customer Request
Color: 1=Gray 2=Blue 3=Black
4=Green 5=Orange 6=Red
7=Transparent 8=Yellow 9=White

Pluggable Series

KLS2-EDVC-5.00/5.08 Series Pitch=5.00mm/5.08mm

Electrical :

Rated voltage: 300V
Rated current: 15A
Contact resistance: 20mΩ
Insulation resistance: 5000MΩ/1000V
Withstanding Voltage: AC1500V/1Min

Material

Pin header: Brass, Tin plated
Housing: PA66, UL94V-0

Mechanical

Temp. Range: -40°C~+105°C
MAX Soldering: +250°C for 5 Sec

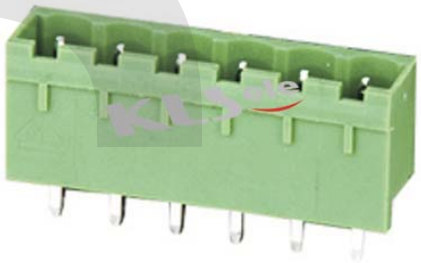

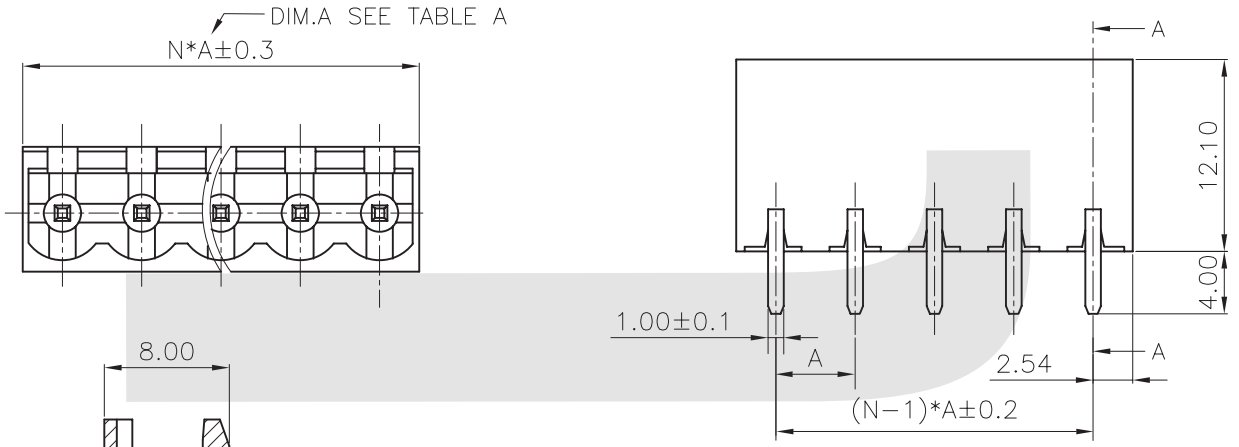

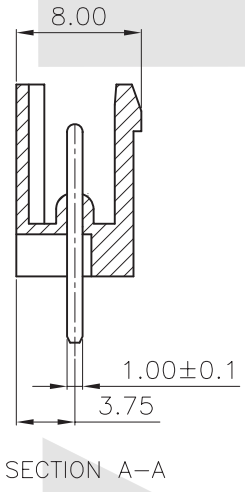

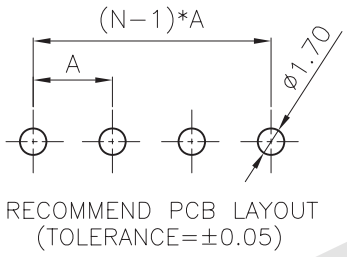

TABLE A

TYPE	Dimension A
1	5.00
2	5.08
3	7.50
4	7.62

ORDER INFORMATION

Product NO.: KLS2-EDVC-5.00-XXP X X

Pos. NO.
Series No.
Pitch: 5.00=5.00mm 5.08=5.08mm
7.50=7.50mm 7.62=7.62mm
Number of Pole
Customer Request
Color: 1=Gray 2=Blue 3=Black
4=Green 5=Orange 6=Red
7=Transparent 8=Yellow 9=White

Pluggable Series

KLS2-EDRC-5.00/5.08 Series Pitch=5.00mm/5.08mm

Electrical :
Rated voltage: 300V
Rated current: 15A
Contact resistance: 20mΩ
Insulation resistance: 5000MΩ/1000V
Withstanding Voltage: AC1500V/1Min



Material
Pin header: Brass, Tin plated
Housing: PA66, UL94V-0

Mechanical
Temp. Range: -40°C~+105°C
MAX Soldering: +250°C for 5 Sec

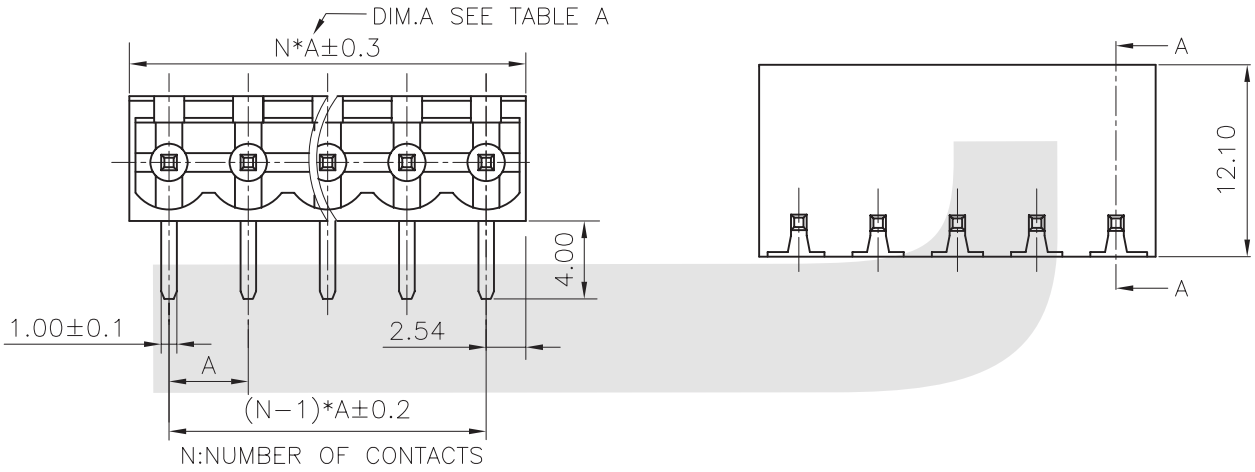

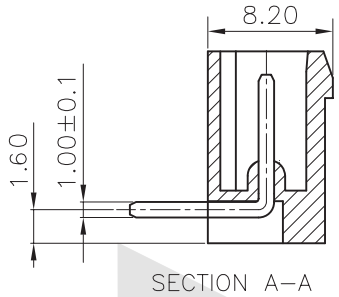

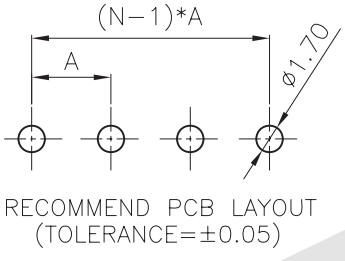

TABLE A

TYPE	Dimension
	A
1	5.00
2	5.08
3	7.50
4	7.62

ORDER INFORMATION

Product NO.: KLS2-EDRC-5.00-XXP X X

Pos. NO.
Series No.
Pitch: 5.00=5.00mm 5.08=5.08mm
7.50=7.50mm 7.62=7.62mm
Number of Pole
Customer Request
Color: 1=Gray 2=Blue 3=Black
4=Green 5=Orange 6=Red
7=Transparent 8=Yellow 9=White

Pluggable Series

KLS2-EDVY-5.00/5.08 Series Pitch=5.00mm/5.08mm

Electrical :

Rated voltage: 300V
Rated current: 15A
Contact resistance: 20mΩ
Insulation resistance: 5000MΩ/1000V
Withstanding Voltage: AC1500V/1Min

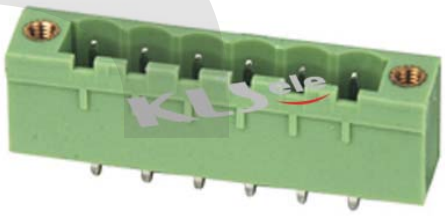

Material

Pin header: Brass, Tin plated
Housing: PA66, UL94V-0

Mechanical

Temp. Range: -40°C~+105°C
MAX Soldering: +250°C for 5 Sec

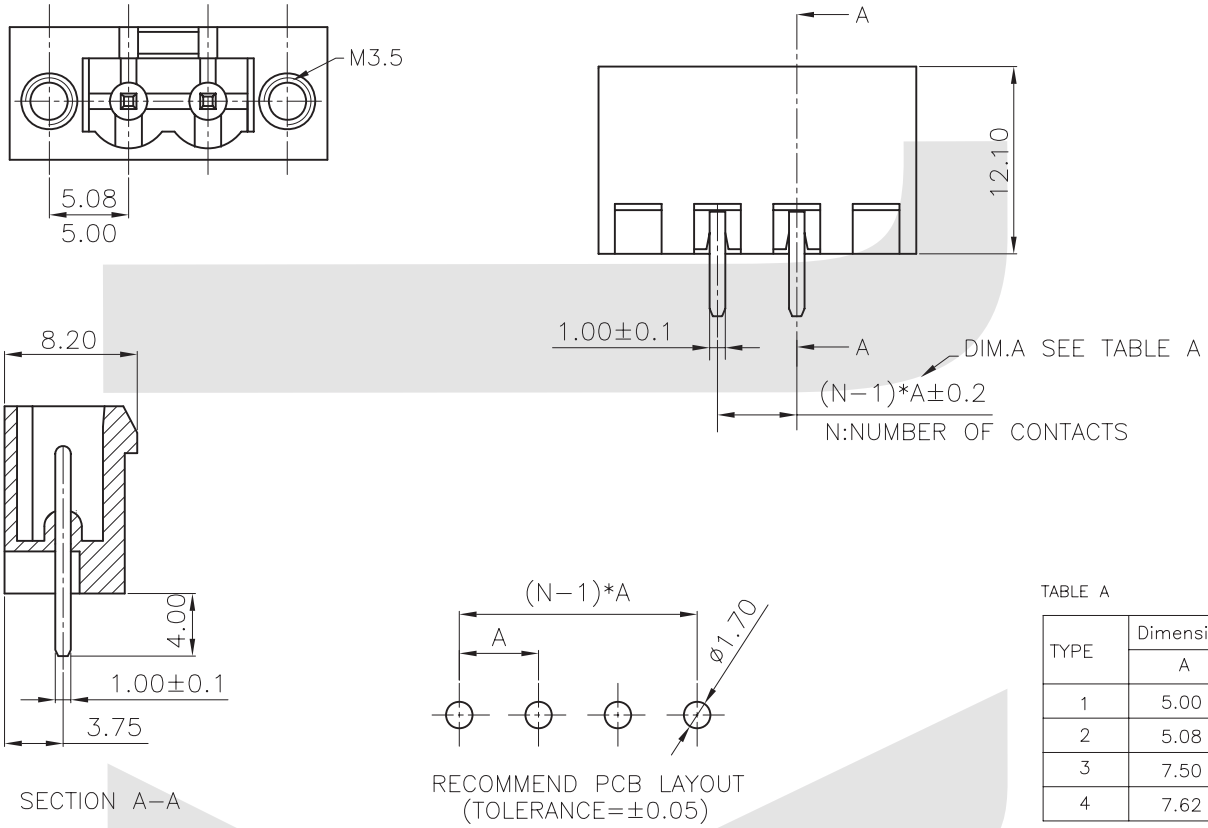

TABLE A

TYPE	Dimension
	A
1	5.00
2	5.08
3	7.50
4	7.62

ORDER INFORMATION

Product NO.: KLS2-EDVY-5.00-XXP X X

Pos. NO.
Series No.
Pitch: 5.00=5.00mm 5.08=5.08mm
7.50=7.50mm 7.62=7.62mm
Number of Pole
Customer Request
Color: 1=Gray 2=Blue 3=Black
4=Green 5=Orange 6=Red
7=Transparent 8=Yellow 9=White

Pluggable Series

KLS2-EDRY-5.00/5.08 Series Pitch=5.00mm/5.08mm

Electrical :
Rated voltage: 300V
Rated current: 15A
Contact resistance: 20mΩ
Insulation resistance: 5000MΩ/1000V
Withstanding Voltage: AC1500V/1Min



Material
Pin header: Brass, Tin plated
Housing: PA66, UL94V-0

Mechanical
Temp. Range: -40°C~+105°C
MAX Soldering: +250°C for 5 Sec

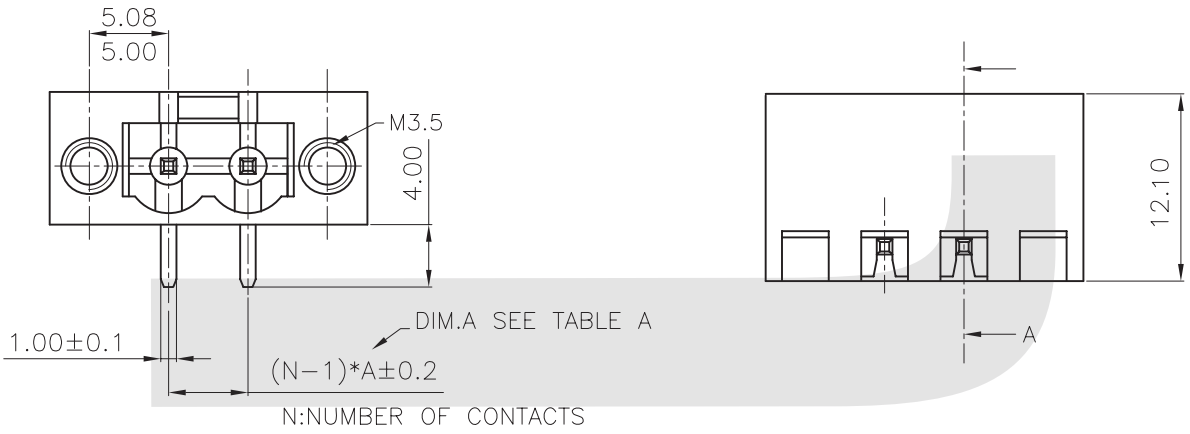

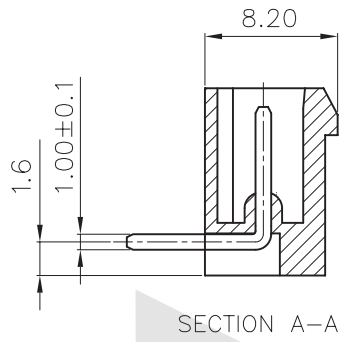

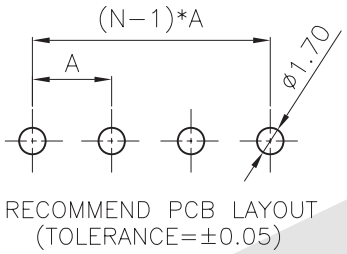

TABLE A

TYPE	Dimension
	A
1	5.00
2	5.08
3	7.50
4	7.62

ORDER INFORMATION

Product NO.: KLS2-EDRY-5.00-XXP X X

Pos. NO.
Series No.
Pitch: 5.00=5.00mm 5.08=5.08mm
7.50=7.50mm 7.62=7.62mm
Number of Pole
Customer Request
Color: 1=Gray 2=Blue 3=Black
4=Green 5=Orange 6=Red
7=Transparent 8=Yellow 9=White

Pluggable Series

KLS2-EDCV-5.00/5.08 Series Pitch=5.00mm/5.08mm

Electrical :

Rated voltage: 300V
Rated current: 15A
Contact resistance: 20mΩ
Insulation resistance: 5000MΩ/1000V
Withstanding Voltage: AC1500V/1Min

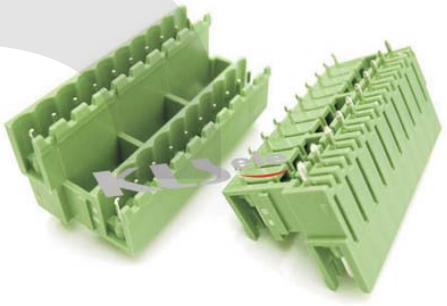

Material

Housing: Pa66, UL94V-0
Screws: M2.5,steel,Zinc plated
Contact :Phosphor Bronze

Mechanical

Temp. Range: -40°C~+105°C
MAX Soldering: +250°C for 5 Sec
Wire range: 28-12AWG 2.5mm²
Torque:0.4Nm (3.6Lb. in)
Strip length: 7-8 mm

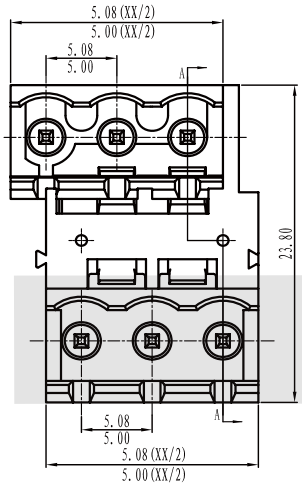

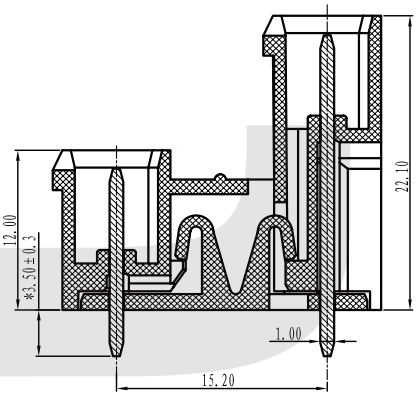

SECTION A-A

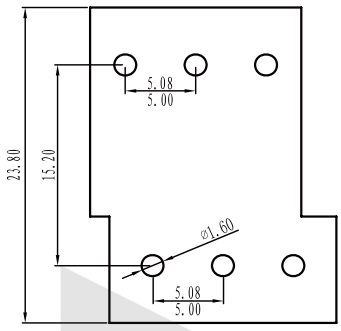

ORDER INFORMATION

Product NO.: KLS2-EDCV-5.00-XXP X X

Pos. NO.
Series No.
Pitch: 5.00=5.00mm 5.08=5.08mm
Number of Pole
Customer Request
Color: 1=Gray 2=Blue 3=Black
4=Green 5=Orange 6=Red
7=Transparent 8=Yellow 9=White

II

Pluggable Series

KLS2-EDCRC-5.00/5.08 Series Pitch=5.00mm/5.08mm

Electrical :

Rated voltage: 300V
Rated current: 15A
Contact resistance: 20mΩ
Insulation resistance: 5000MΩ/1000V
Withstanding Voltage: AC1500V/1Min



Material

Housing: Pa66, UL94V-0
Screws: M2.5,steel,Zinc plated
Contact :Phosphor Bronze

Mechanical

Temp. Range: -40°C~+105°C
MAX Soldering: +250°C for 5 Sec
Wire range: 28-12AWG 2.5mm²
Torque:0.4Nm (3.6Lb. in)
Strip length: 7-8 mm

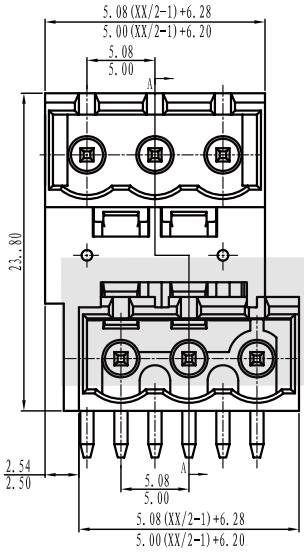

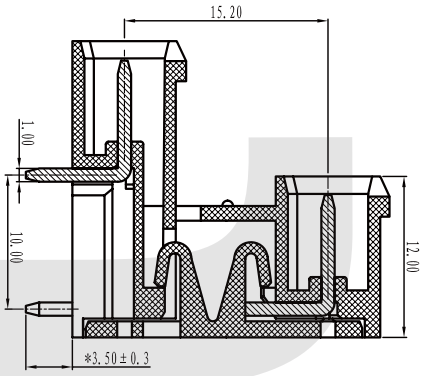

SECTION A-A

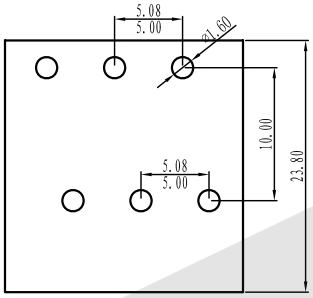

ORDER INFORMATION

Product NO.: KLS2-EDCRC-5.00-XXP X X

- Pos. NO.
- Series No.
- Pitch: 5.00=5.00mm 5.08=5.08mm
- Number of Pole
- Customer Request
- Color: 1=Gray 2=Blue 3=Black 4=Green 5=Orange 6=Red 7=Transparent 8=Yellow 9=White

Pluggable Series

KLS2-EDDLV-5.00/5.08 Series Pitch=5.00mm/5.08mm

Electrical :

Rated voltage: 300V
Rated current: 15A
Contact resistance: 20mΩ
Insulation resistance: 5000MΩ/1000V
Withstanding Voltage: AC1500V/1Min

Material

Housing: Pa66, UL94V-0
Screws: M2.5,steel,Zinc plated
Contact :Phosphor Bronze

Mechanical

Temp. Range: -40°C~+105°C
MAX Soldering: +250°C for 5 Sec
Wire range: 28-12AWG 2.5mm²
Torque:0.4Nm (3.6Lb. in)
Strip length: 7-8 mm

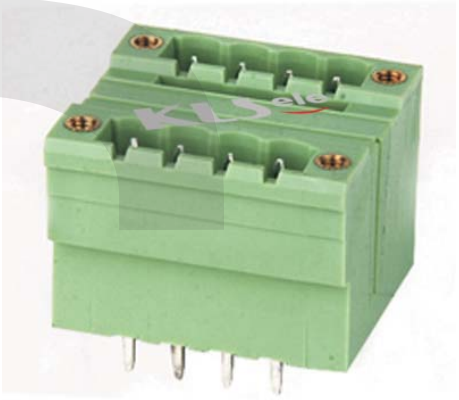

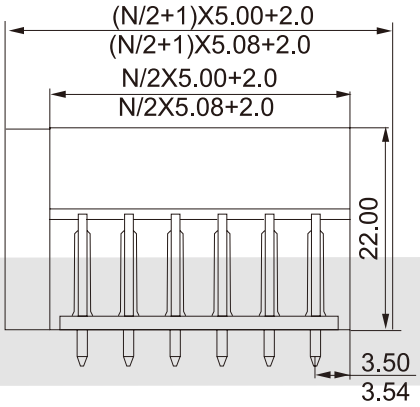

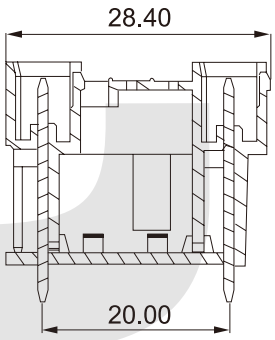

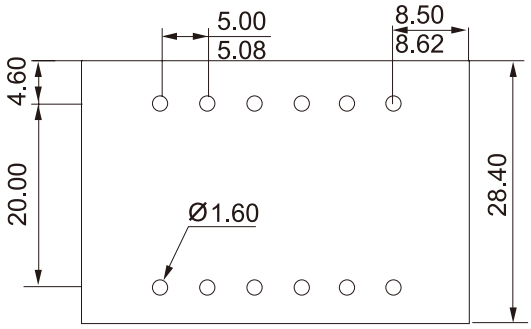

PCB LAYOUT

ORDER INFORMATION

Product NO.: KLS2-EDDLV-5.00-XXP X X

Pos. NO.
Series No.
Pitch: 5.00=5.00mm 5.08=5.08mm
Number of Pole
Customer Request
Color: 1=Gray 2=Blue 3=Black
4=Green 5=Orange 6=Red
7=Transparent 8=Yellow 9=White

Pluggable Series

KLS2-EDDLR-5.00/5.08 Series Pitch=5.00mm/5.08mm

Electrical :

Rated voltage: 300V
Rated current: 15A
Contact resistance: 20mΩ
Insulation resistance: 5000MΩ/1000V
Withstanding Voltage: AC1500V/1Min

Material

Housing: Pa66, UL94V-0
Screws: M2.5,steel,Zinc plated
Contact :Phosphor Bronze

Mechanical

Temp. Range: -40°C~+105°C
MAX Soldering: +250°C for 5 Sec
Wire range: 28-12AWG 2.5mm²
Torque:0.4Nm (3.6Lb. in)
Strip length: 7-8 mm



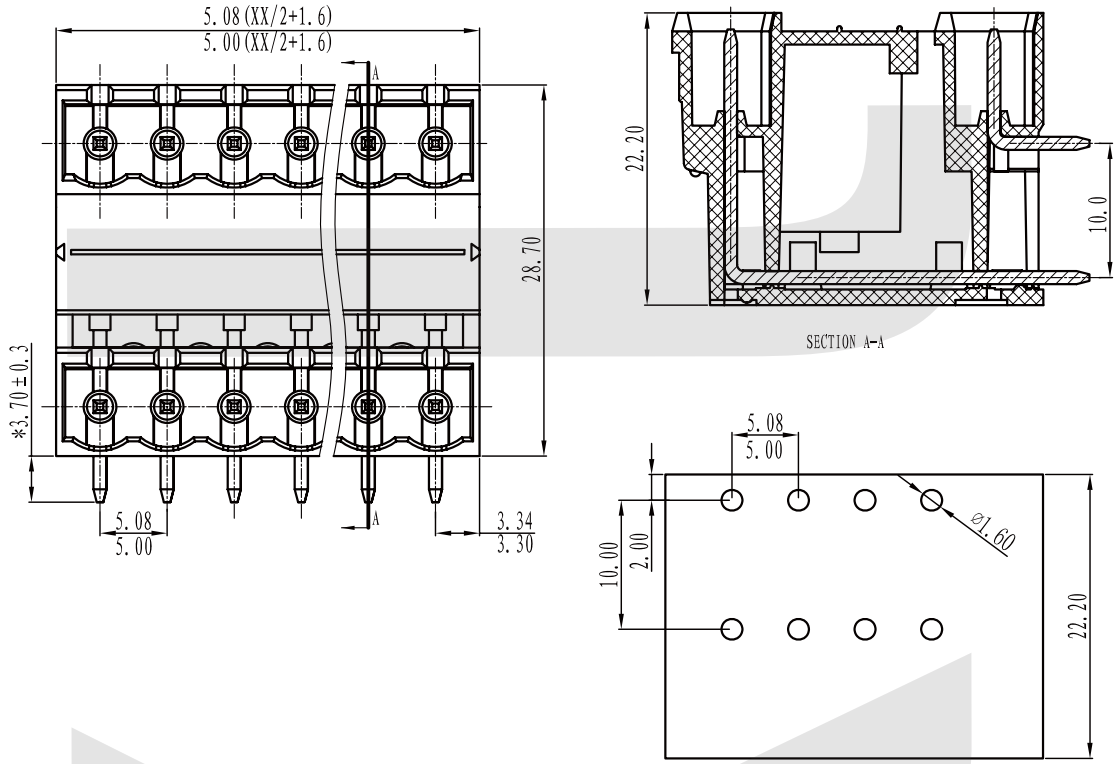

ORDER INFORMATION

Product NO.: KLS2-EDDLR-5.00-XXP X X

Pos. NO.
Series No.
Pitch: 5.00=5.00mm 5.08=5.08mm
Number of Pole
Customer Request
Color: 1=Gray 2=Blue 3=Black
4=Green 5=Orange 6=Red
7=Transparent 8=Yellow 9=White

Pluggable Series

KLS2-EDDV-5.00/5.08 Series Pitch=5.00mm/5.08mm

Electrical :

Rated voltage: 300V
Rated current: 15A
Contact resistance: 20mΩ
Insulation resistance: 5000MΩ/1000V
Withstanding Voltage: AC1500V/1Min

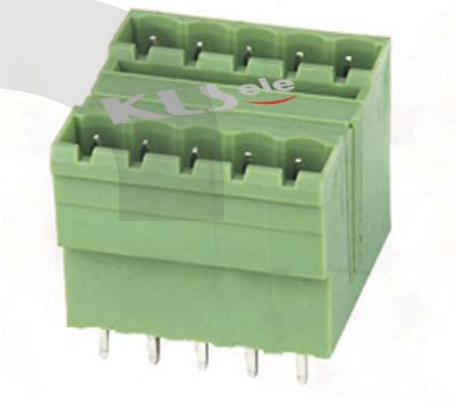

Material

Housing: Pa66, UL94V-0
Screws: M2.5,steel,Zinc plated
Contact :Phosphor Bronze

Mechanical

Temp. Range: -40°C~+105°C
MAX Soldering: +250°C for 5 Sec
Wire range: 28-12AWG 2.5mm²
Torque:0.4Nm (3.6Lb. in)
Strip length: 7-8 mm

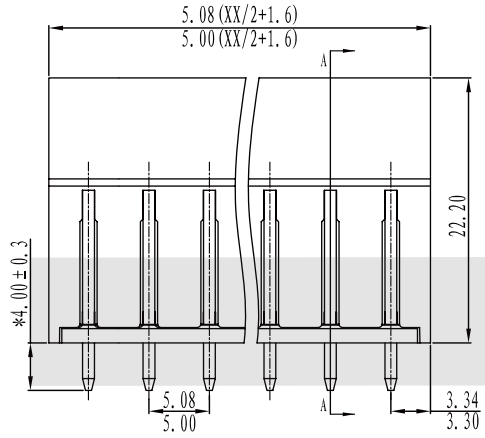

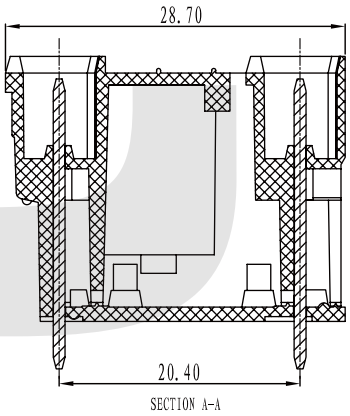

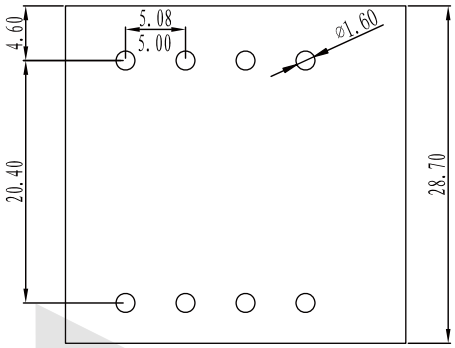

ORDER INFORMATION

Product NO.: KLS2-EDDV-5.00-XXP X X

Pos. NO.
Series No.
Pitch: 5.00=5.00mm 5.08=5.08mm
Number of Pole
Customer Request
Color: 1=Gray 2=Blue 3=Black
4=Green 5=Orange 6=Red
7=Transparent 8=Yellow 9=White

Pluggable Series

KLS2-EDDR-5.00/5.08 Series Pitch=5.00mm/5.08mm

Electrical :

Rated voltage: 300V
Rated current: 15A
Contact resistance: 20mΩ
Insulation resistance: 5000MΩ/1000V
Withstanding Voltage: AC1500V/1Min



Material

Housing: Pa66, UL94V-0
Screws: M2.5,steel,Zinc plated
Contact :Phosphor Bronze

Mechanical

Temp. Range: -40°C~+105°C
MAX Soldering: +250°C for 5 Sec
Wire range: 28-12AWG 2.5mm²
Torque:0.4Nm (3.6Lb. in)
Strip length: 7-8 mm

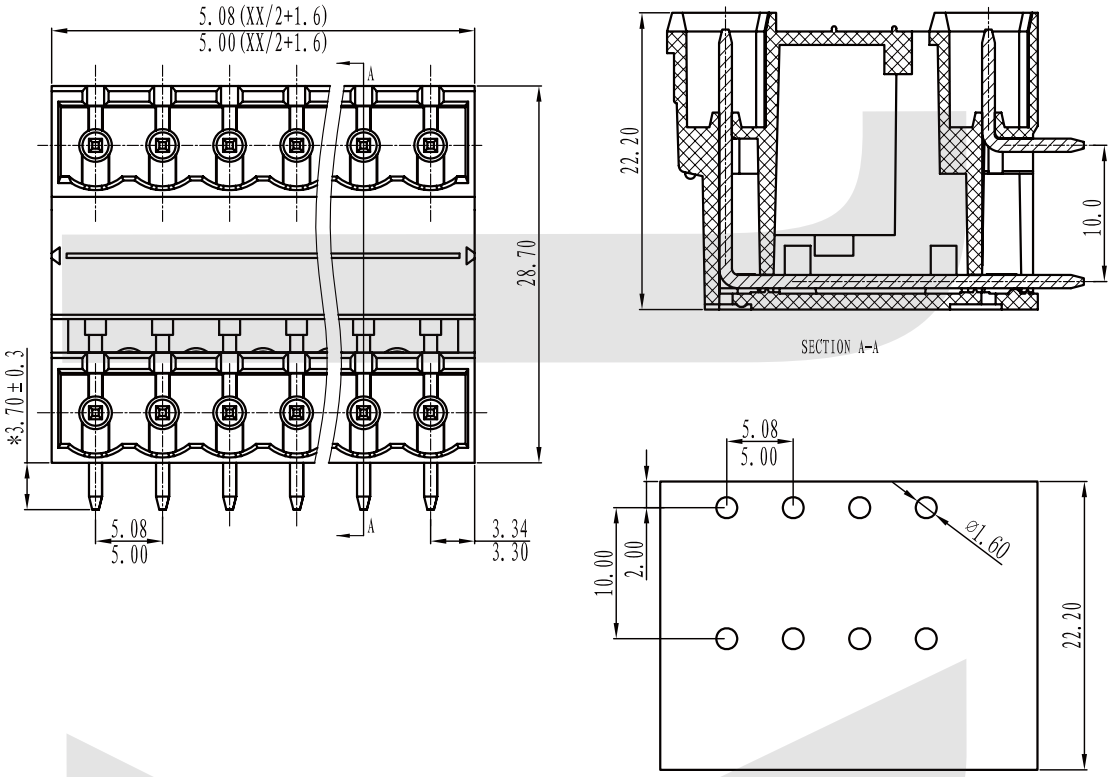

ORDER INFORMATION

Product NO.: KLS2-EDDR-5.00-XXP X X

Pos. NO.
Series No.
Pitch: 5.00=5.00mm 5.08=5.08mm
Number of Pole
Customer Request
Color: 1=Gray 2=Blue 3=Black
4=Green 5=Orange 6=Red
7=Transparent 8=Yellow 9=White

Pluggable Series

KLS2-EDK-7.62 Pitch 7.62mm

Capability:

Rated voltage/Rated current:	250V/15A
Wire range:	28-12AWG 2.5mm2
Withstand Voltage:	1500VAC/1Min
Insulation resistance:	5000MΩ/DC1000V
Contact resistance:	20mΩ
Temp.Range:	-40°C~+105°C
Torque:	0.4Nm (3.6Lb. in)
Strip length:	7-8 mm
MaterialHousing:	PA66,UL94V-0
Screws:	M3,steel,Zinc plated
Contact:	Phosphor Bronze

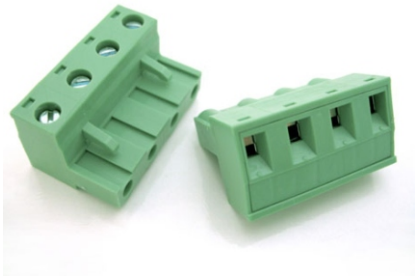

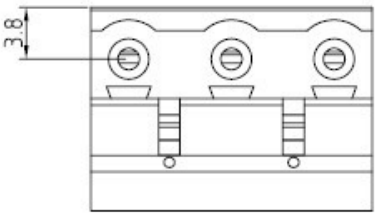

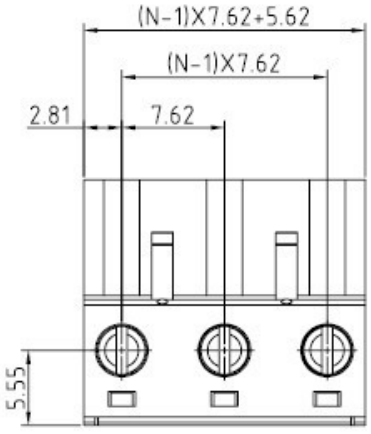

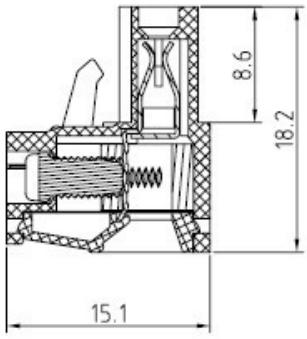

ORDER INFORMATION

Product NO.: KLS2-EDK- 7.62 -XXP X X X

- Pos. NO.
- Series No.
- Number of Pole
- Color: 1=Gray 2=Blue 3=Black 4=Green 5=Orange 6=Red 7=Transparent 8=Yellow 9=White
- Screw: C=Cross Screw S=Slot Screw
- Customer Request

Pluggable Series

KLS2-EDV-7.62 Pitch 7.62mm

Capability:

Rated voltage/Rated current:	250V/15A
Withstand Voltage:	1500VAC/1Min
Insulation resistance:	5000MΩ/DC1000V
Contact resistance:	20mΩ
Temp.Range:	-40°C~+105°C
MaterialHousing:	PA66,UL94V-0
Pin header:	Brass Tin plated

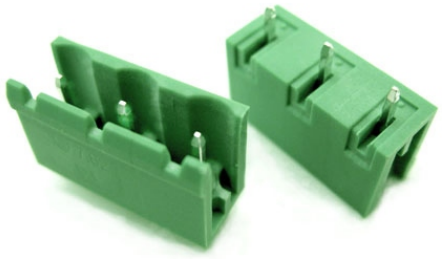

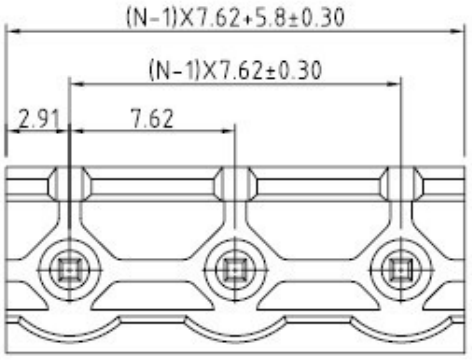

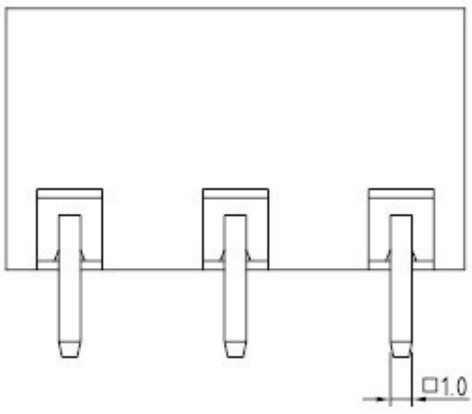

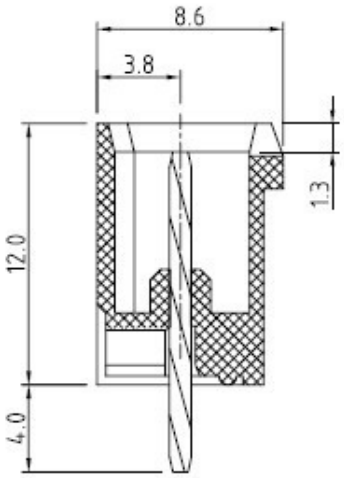

ORDER INFORMATION

Product NO.: KLS2-EDV- 7.62 -XXP X X X

- Pos. NO.
- Series No.
- Number of Pole
- Customer Request
- Screw: C=Cross Screw, S=Slot Screw
- Color: 1=Gray, 2=Blue, 3=Black, 4=Green, 5=Orange, 6=Red, 7=Transparent, 8=Yellow, 9=White

Pluggable Series

KLS2-EDR-7.62 Pitch 7.62mm

Capability:

Rated voltage/Rated current:	250V/15A
Withstand Voltage:	1500VAC/1Min
Insulation resistance:	5000MΩ/DC1000V
Contact resistance:	20mΩ
Temp.Range:	-40°C~+105°C
MaterialHousing:	PA66,UL94V-0
Pin header:	Brass Tin plated



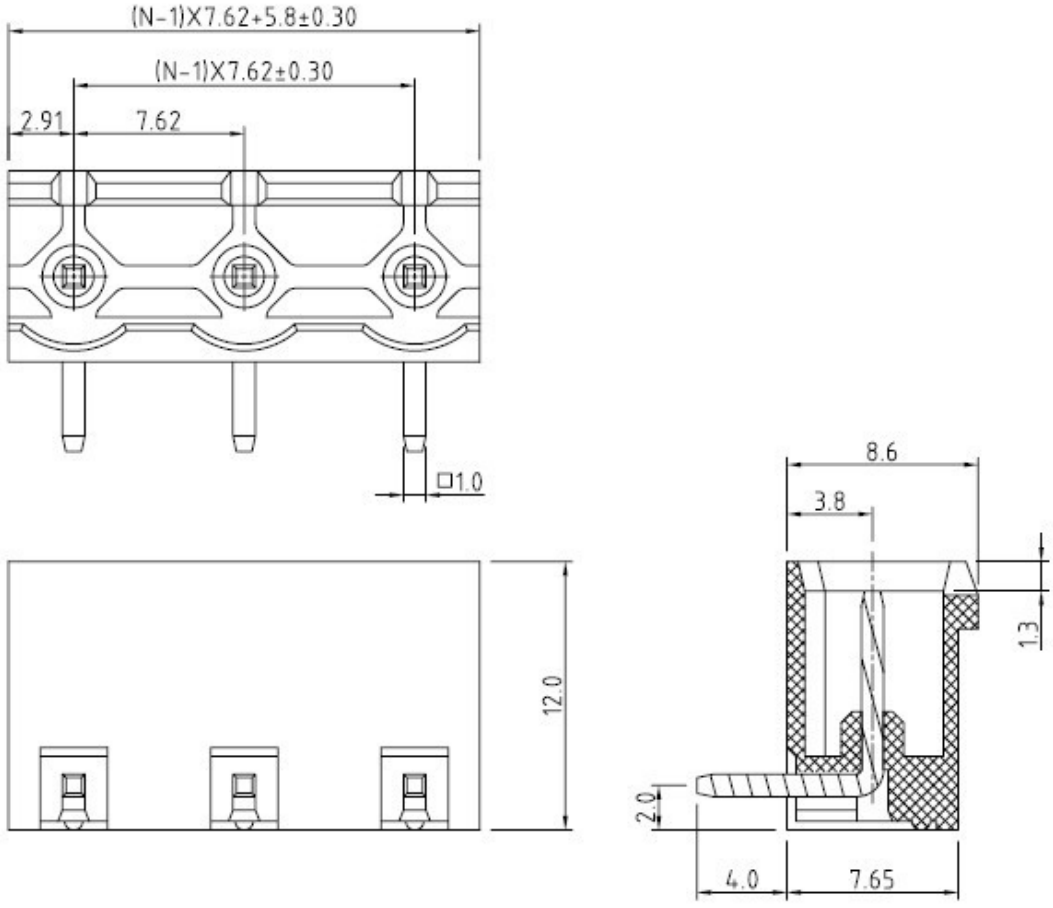

ORDER INFORMATION

Product NO.: KLS2-EDR- 7.62 -XXP X X X

- Pos. NO.
- Series No.
- Number of Pole
- Customer Request
- Screw: C=Cross Screw, S=Slot Screw
- Color: 1=Gray, 2=Blue, 3=Black, 4=Green, 5=Orange, 6=Red, 7=Transparent, 8=Yellow, 9=White

Strip Series

KLS2-3A-4MM-H(U,V) Series

Material

Base: Flat-bottom
Housing material: PE, UL94V-2
Terminal material: Brass
Working temperature: -40°C~+105°C
Poles available:2-12 Poles

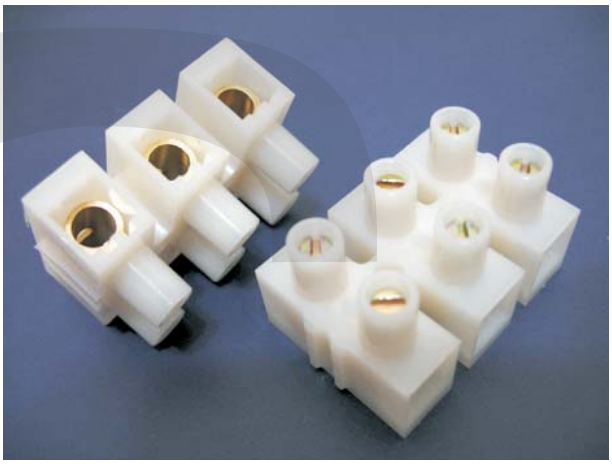

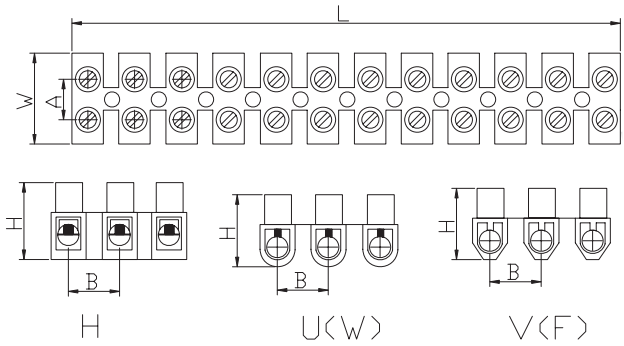

Model	wire range (mm)	Amp	Volt	PCS/Ctn	G.w.	L	W	H	A	B	Ctn Size
KLS2-3A-4	4	3A	400V	1000	19	93	16	12	6	8	41.5*21*24.5
KLS2-6A-6	6	6A	400V	1000	24	115	15.7	13	6.5	9.5	42*25*28
KLS2-10A-10	10	10A	400V	500	18	126	20.2	15.5	8.4	10.5	39*28*24
KLS2-15A-12	12	16A	400V	500	26	139	23	17.7	10.3	12	43*30*27
KLS2-20A-14	14	20A	400V	500	27	155	25	19.2	11.5	13.5	43*30*27
KLS2-30A-16	16	30A	400V	300	25	171	26	20.5	12	14.5	54*28*22.5
KLS2-60A-25	25	60A	400V	200	24	192	30	26	13.5	16.5	41*32.5*21
KLS2-80A-30	30	80A	400V	100	16	205	33	27	15	17	55*21*28
KLS2-100A-40	40	100A	400V	50	18	250	46	31	22	21	54*25*20

ORDER INFORMATION

Product NO.: KLS2-XXA-4-H-XX

Pos. NO.
Pin Number
Molded shape
See Drawing

Strip Series

KLS2-610-H1.2 Series

Material

Base: With 1.2mm elevated base
Housing material: PA66, UL94V-2
Terminal material: Cladded copper strips, Zn plated
Screws: Steel
Working temperature: -40°C ~ +105°C
Poles available: 2-12 Poles

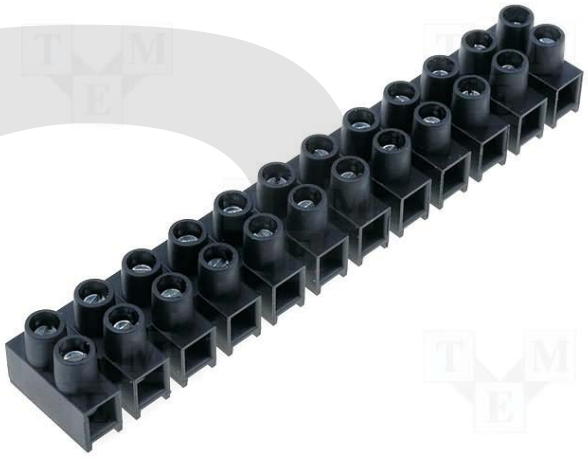

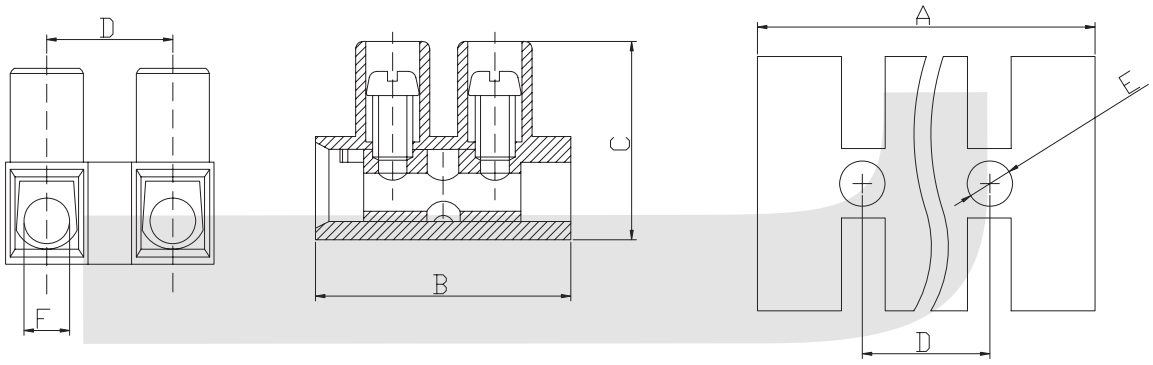

Model	MM²	Amp	Volt	Screw	Dimensions(mm / in.)						
					Unit	A	B	C	D	E	F
KLS2-610-H1.2	1.5	17.5A	450V	M2.6x5	MM	96.0	17.8	15.5	8.2	3.0	2.8
KLS2-620-H1.2	2.5	24A	450V	M3.0x6	MM	116.5	20.0	16.7	10.0	3.5	3.3
KLS2-630-H1.2	6.5	41A	750V	M3.5x7	MM	140.7	23.8	19.0	12.0	3.9	3.9
KLS2-640-H1.2	10.0	57A	750V	M4x9	MM	158.0	25.6	25.2	13.5	4.4	4.8
KLS2-650-H1.2	16.0	76A	750V	M4x9	MM	169.8	28.0	23.0	14.5	4.2	6.0
KLS2-660-H1.2	25.0	101A	750V	M5x11	MM	194.4	36.9	28.7	16.5	4.2	7.5

ORDER INFORMATION

Product NO.: KLS2-610-H1.2-XX-W

Pos. NO. — See Drawing

Pin Number

Color W=White B=Black

Strip Series

KLS2-610-H4.3 Series

Material

Base: With 4.3mm elevated base
Housing material: PA66, UL94V-2
Terminal material: Cladded copper strips, Zn plated
Screws: Steel
Working temperature: -40°C ~ +105°C
Poles available: 2-12 Poles

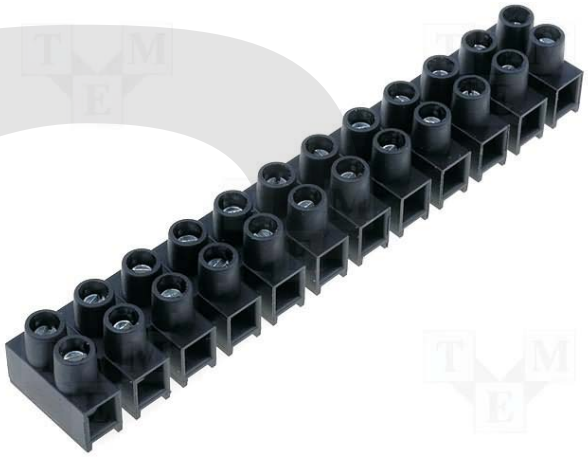

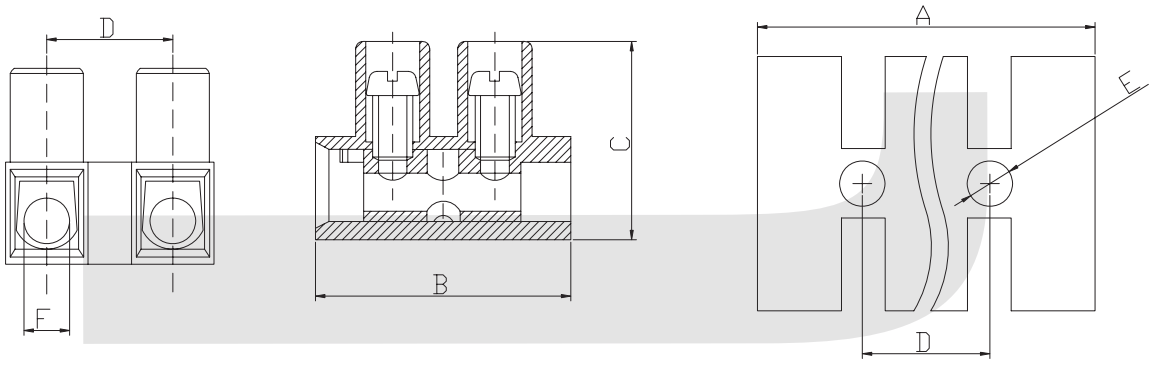

Model	MM²	Amp	Volt	Screw	Dimensions(mm / in.)						
					Unit	A	B	C	D	E	F
KLS2-610-H4.3	1.5	17.5A	450V	M2.6x5	MM	96.0	17.8	15.5	8.2	3.0	2.8
KLS2-620-H4.3	2.5	24A	450V	M3.0x6	MM	116.5	20.0	16.7	10.0	3.5	3.3
KLS2-630-H4.3	6.5	41A	750V	M3.5x7	MM	140.7	23.8	19.0	12.0	3.9	3.9
KLS2-640-H4.3	10.0	57A	750V	M4x9	MM	158.0	25.6	25.2	13.5	4.4	4.8
KLS2-650-H4.3	16.0	76A	750V	M4x9	MM	169.8	28.0	23.0	14.5	4.2	6.0
KLS2-660-H4.3	25.0	101A	750V	M5x11	MM	194.4	36.9	28.7	16.5	4.2	7.5

ORDER INFORMATION

Product NO.: KLS2-610-H4.3-XX-W

Pos. NO. — See Drawing
Pin Number
Color W=White B=Black

Strip Series

KLS2-FT011 Series

Material

Base: Flat-bottom
Housing material: PA66, UL94V-2
Terminal material: Brass
Screws: Steel
Working temperature: -40 ° C ~ +105 ° C
Poles available: 2-12 Poles



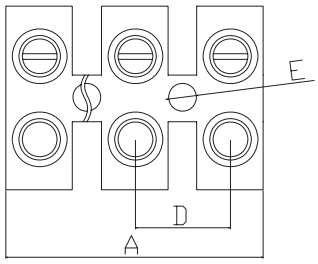

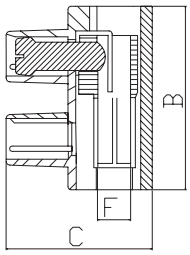

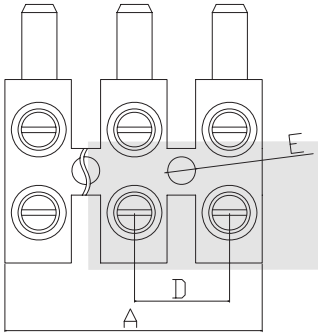

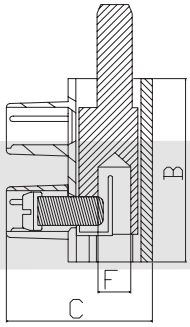

Model	Wire (mm^2)	Amp	Volt	Screw	Dimensions(mm / in.)						
					Unit	A	B	C	D	E	F
8HP-0	1.5	17.5A	450V	M2.6x5	MM	96.0	17.8	14.3	8.2	3.0	2.80
10HP-0	2.5	24A	450V	M3.0x6	MM	116.5	20.0	15.5	10.0	3.5	3.3
12HP-0	6.0	41A	750V	M3.5x7	MM	140.7	23.8	17.8	12.0	3.9	3.9
14HP-0	10.0	57A	750V	M4.0x9	MM	158.0	25.6	24.0	13.5	4.4	4.8
16HP-0	16.0	76A	750V	M4.0x9	MM	169.8	28.0	21.8	14.5	4.2	6.0
18HP-0	25.0	101A	750V	M5x11	MM	194.4	36.9	27.5	16.5	4.2	7.5

ORDER INFORMATION

Product NO.: KLS2-FT011-8HP-0-XX

Pos. NO.
Series No.
Pin Number
See Drawing

Strip Series

KLS2-FT013 Series

Material

Housing material: PC, UL94V-2
Terminal material: Brass
Working temperature: 85°C
Poles available: 2-12 Poles



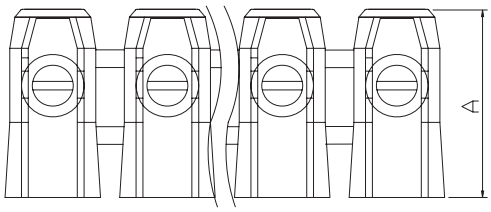

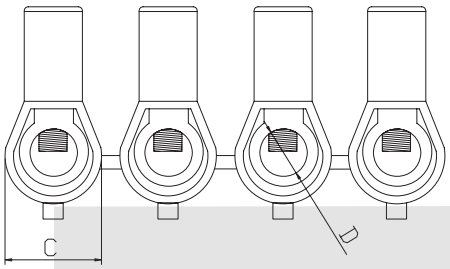

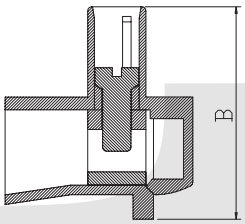

Model	Wire (mm^2)	Amp	Volt	Screw	Dimensions(mm / in.)				
					Unit	A	B	C	D
1.5V	1.5	17.5A	450V	M2.5	MM	15.0	16.0	7.0	3.3
2.5V	2.5	24A	450V	M3.0	MM	20.0	18.0	7.5	4.0
4V	4	32A	450V	M3.5	MM	22.0	19.0	9.0	4.5
6V	6	41A	450V	M4.0	MM	25.0	22.0	10.0	6.0
10V	10	57A	500V	M4.0	MM	29.0	25.0	12.0	7.7
16V	16	76A	500V	M4.5	MM	35.0	31.0	16.5	9.5
25V	25	101A	500V	M5.5	MM	38.0	40.0	20.0	12.0
35V	35	125A	500V	M6	MM	46.0	43.0	21.0	14.0

ORDER INFORMATION

Product NO.: KLS2-FT013-1.5V-XX

Pos. NO.
Series No.
Pin Number
See Drawing

Screwless Series

KLS2-244V-2.50/2.54 Series Pitch=2.50mm/2.54mm

Electrical :

Rated voltage: 150V
Rated current: 4A
Contact resistance: 20mΩ
Insulation resistance: 5000MΩ/1000V
Withstanding Voltage: AC2000V/1Min
Wire range: 28-20AWG 0.5MM²



Material

Housing:PA66, UL94V-0
Wire guard: Stainless steel
Pin header: Phosphor bronze, Tin plated

Mechanical

Temp. Range: -40°C~+105°C
Strip length:5-6mm

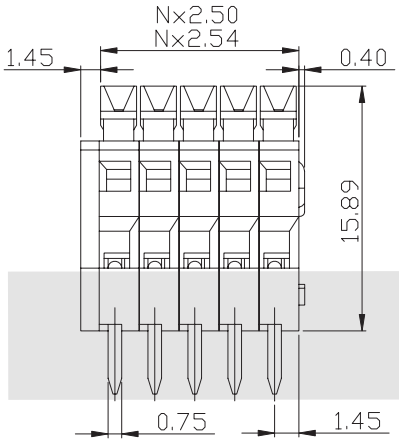

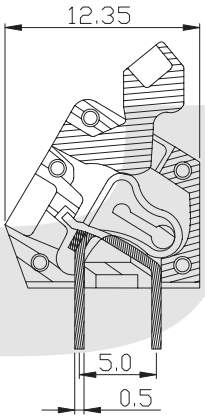

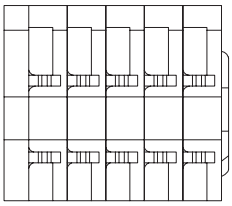

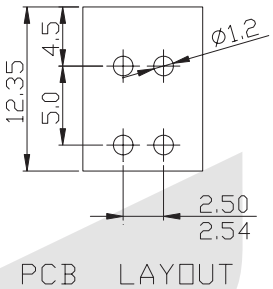

PCB LAYOUT

ORDER INFORMATION

Product NO.: KLS2-244V-2.50-XXP X X

Pos. NO.
Series No.
Pitch: 2.50=2.50mm
2.54=2.54mm
Number of Pole
Customer Request
Color: 1=Gray 2=Blue 3=Black
4=Green 5=Orange 6=Red
7=Transparent 8=Yellow 9=White

TERMINAL BLOCK Connector

Screwless Series

KLS2-244R-2.50 / 2.54 Series Pitch=2.50mm/2.54mm

Electrical :
Rated voltage: 150V
Rated current: 4A
Contact resistance: 20mΩ
Insulation resistance: 5000MΩ/1000V
Withstanding Voltage: AC2000V/1Min
Wire range: 28-20AWG 0.5MM²

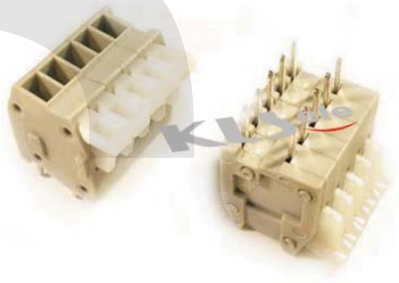

Material
Housing:PA66, UL94V-0
Wire guard : Stainless steel
Pin header: Phosphor bronze, Tin plated

Mechanical
Temp. Range: -40°C~+105°C
Strip length:5-6mm

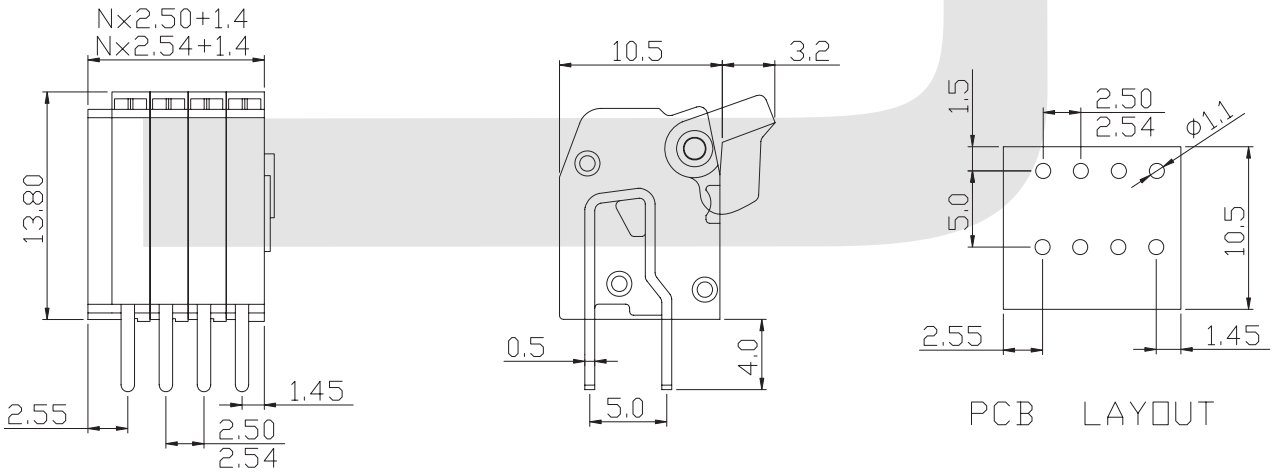

ORDER INFORMATION

Product NO.: KLS2-244R-2.50-XXP X X

- Pos. NO.
- Series No.
- Pitch: 2.50=2.50mm, 2.54=2.54mm
- Number of Pole
- Customer Request
- Color: 1=Gray 2=Blue 3=Black 4=Green 5=Orange 6=Red 7=Transparent 8=Yellow 9=White

All specification & dimensions are subject to change,please call your nearest KLS sales represesntative for update information

Screwless Series

KLS2-141V-2.54 Series Pitch=2.54mm

Electrical :

Rated voltage: 150V
Rated current: 6A
Contact resistance: 20mΩ
Insulation resistance: 5000MΩ/1000V
Withstanding Voltage: AC1500V/1Min
Wire range: 26-20AWG 1.5MM²

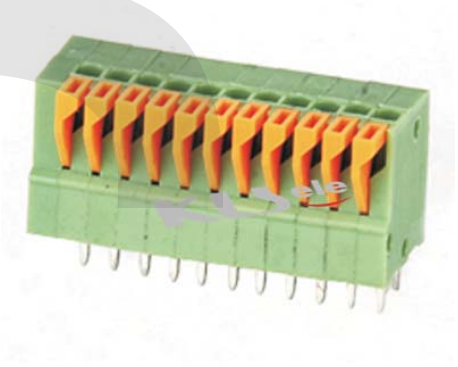

Material

Pin header: Brass, Tin plated
Housing: PA66, UL94V-0
Wire guard : Stainless steel

Mechanical

Temp. Range: -40°C~+105°C
MAX Soldering: +250°C for 5 Sec.
Strip length: 11mm

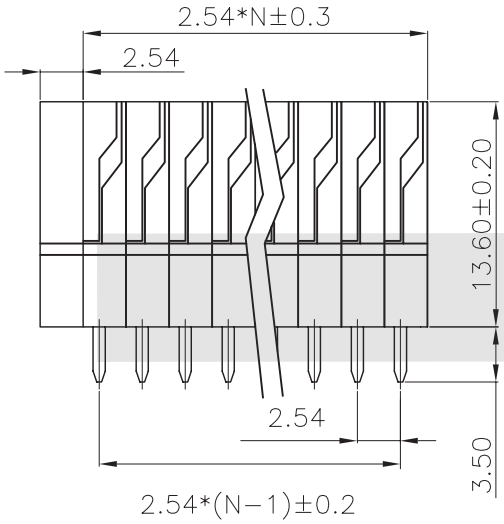

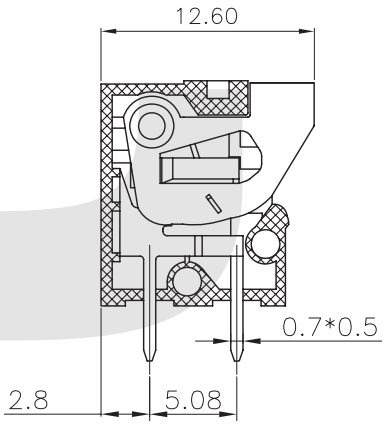

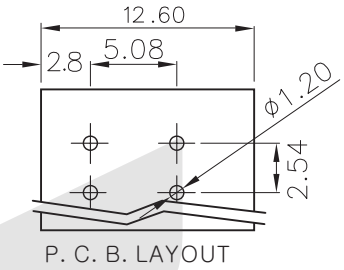

P. C. B. LAYOUT

ORDER INFORMATION

Product NO.: KLS2-141V-2.54-XXP X X

Pos. NO.
Series No.
Pitch: 2.54=2.54mm
Number of Pole
Customer Request
Color: 1=Gray 2=Blue 3=Black
4=Green 5=Orange 6=Red
7=Transparent 8=Yellow 9=White

Screwless Series

KLS2-141R-2.54 Series Pitch=2.54mm

Electrical :

Rated voltage: 150V
Rated current: 6A
Contact resistance: 20mΩ
Insulation resistance: 5000MΩ/1000V
Withstanding Voltage: AC1500V/1Min
Wire range: 26-20AWG 1.5MM²

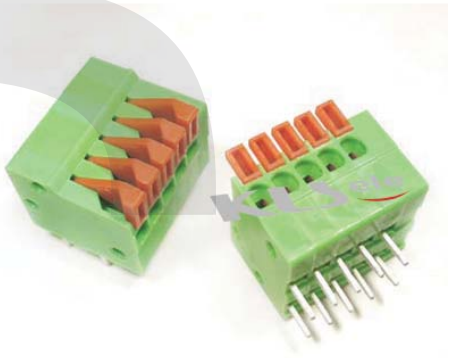

Material

Pin header: Brass, Tin plated
Housing: PA66, UL94V-0
Wire guard : Stainless steel

Mechanical

Temp. Range: -40°C~+105°C
MAX Soldering: +250°C for 5 Sec.
Strip length: 11mm

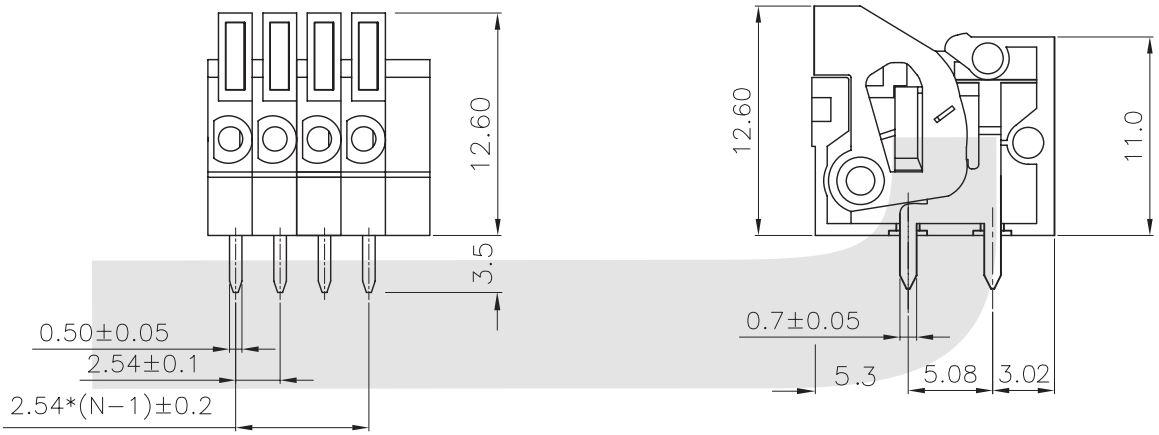

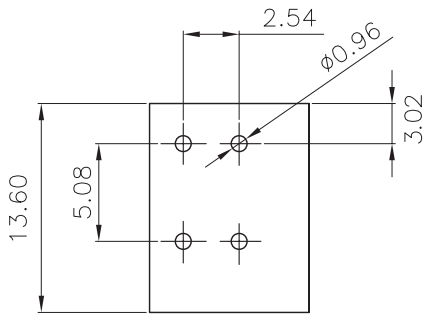

P. C. B. LAYOUT

ORDER INFORMATION

Product NO.: KLS2-141R-2.54-XXP X X

Pos. NO.
Series No.
Pitch: 2.54=2.54mm
Number of Pole
Customer Request
Color: 1=Gray 2=Blue 3=Black
4=Green 5=Orange 6=Red
7=Transparent 8=Yellow 9=White

Screwless Series

KLS2-235R-3.81/5.00 Series Pitch=3.81mm/5.00mm

Electrical :

Rated voltage: 300V
Rated current: 5A
Contact resistance: 20mΩ
Insulation resistance: 5000MΩ/1000V
Withstanding Voltage: AC1500V/1Min
Wire range: 20-14AWG 1.5MM²

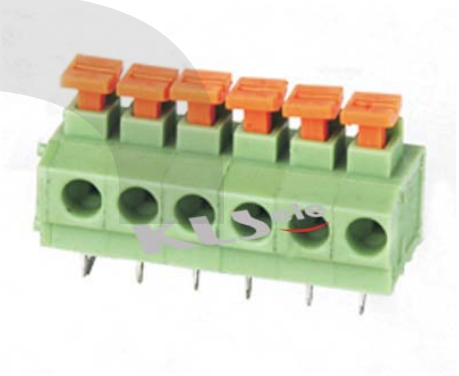

Material

Pin header: Phosphor bronze, Tin plated
Housing: PA66, UL94V-0
Wire guard : Stainless steel

Mechanical

Temp. Range: -40°C~+105°C
MAX Soldering: +250°C for 5 Sec.
Strip length: 9-10mm

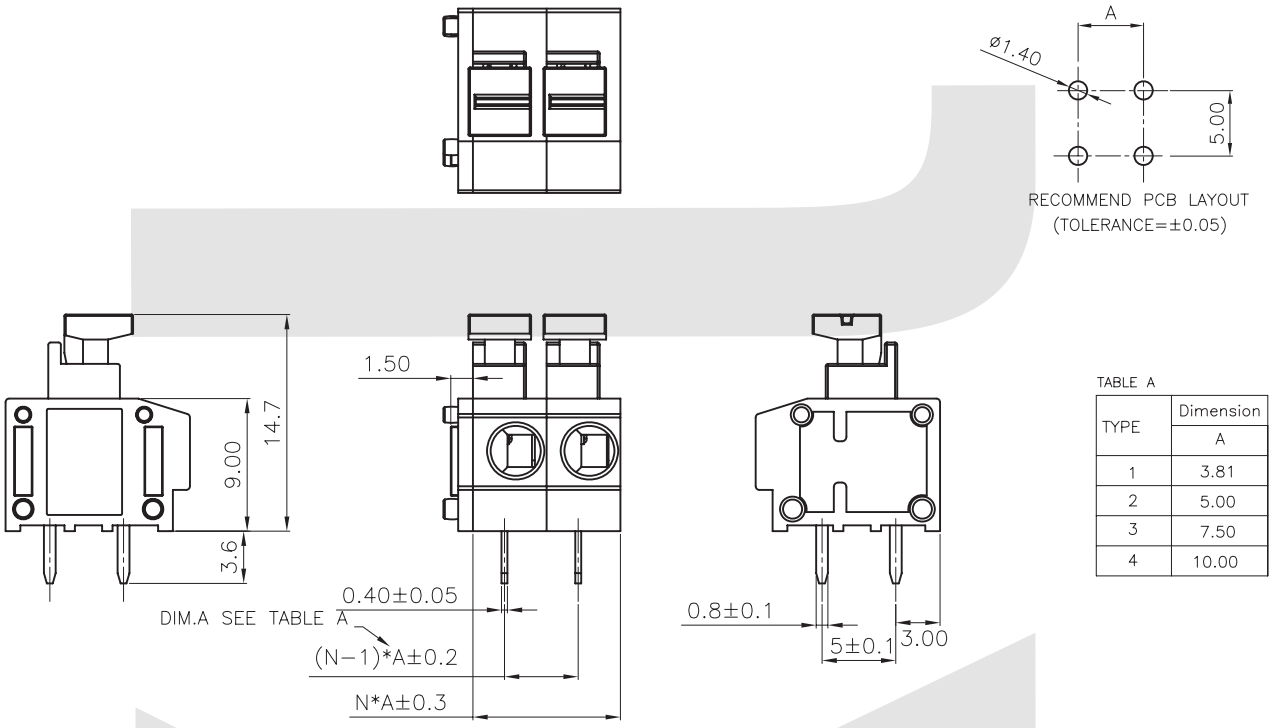

TABLE A

TYPE	Dimension A
1	3.81
2	5.00
3	7.50
4	10.00

ORDER INFORMATION

Product NO.: KLS2-235R-3.81-XXP X X

Pos. NO.
Series No.
Pitch: 3.81=3.81mm 5.00=5.00mm
7.50=7.50mm 10.00=10.00mm
Number of Pole
Customer Request
Color: 1=Gray 2=Blue 3=Black
4=Green 5=Orange 6=Red
7=Transparent 8=Yellow 9=White

Screwless Series

KLS2-142V-5.00 Series Pitch=5.00mm

Electrical :

Rated voltage: 300V
Rated current: 10A
Contact resistance: 20mΩ
Insulation resistance: 5000MΩ/1000V
Withstanding Voltage: AC1500V/1Min
Wire range: 22-14AWG 1.5MM²

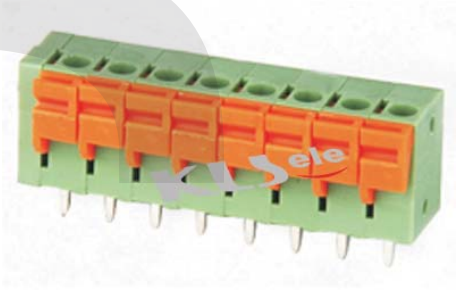

Material

Pin header: Brass, Tin plated
Housing: PA66, UL94V-0
Wire guard : Stainless steel

Mechanical

Temp. Range: -40°C~+105°C
MAX Soldering: +250°C for 5 Sec.
Strip length: 10mm

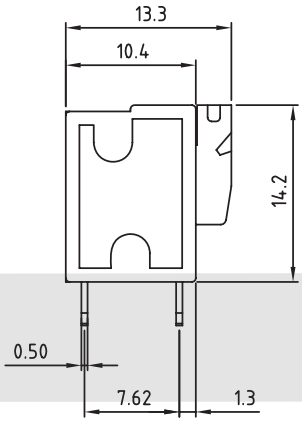

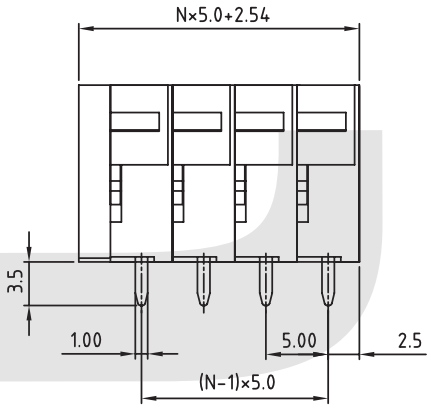

N=Number of contacts

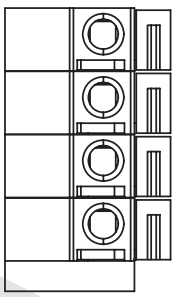

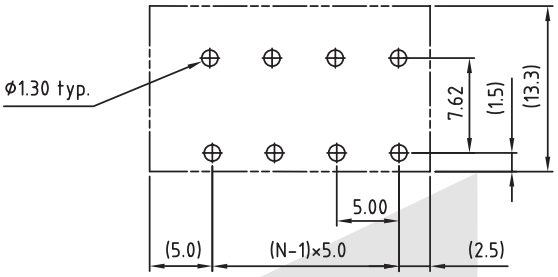

P.C.B. LAYOUT

ORDER INFORMATION

Product NO.: KLS2-142V-5.00-XXP X X

Pos. NO.
Series No.
Pitch: 5.00=5.00mm
Number of Pole
Customer Request
Color: 1=Gray 2=Blue 3=Black
4=Green 5=Orange 6=Red
7=Transparent 8=Yellow 9=White

Screwless Series

KLS2-2.50V-5.00 Series Pitch=2.50mm

Electrical :

Rated voltage: 300V
Rated current: 2A
Contact resistance: 20mΩ
Insulation resistance: 5000MΩ/1000V
Withstanding Voltage: AC1500V/1Min
Wire range: 20-16AWG 1.5MM²

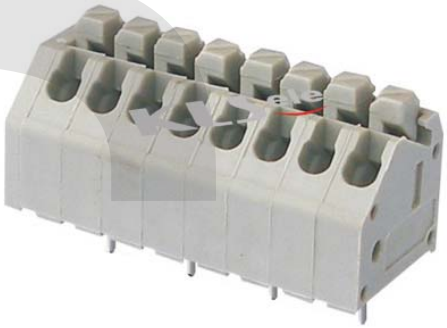

Material

Pin header: Phosphor bronze, Tin plated
Housing: PA66, UL94V-0
Wire guard : Stainless steel

Mechanical

Temp. Range: -40ºC~+105ºC
MAX Soldering: +250ºC for 5 Sec.
Strip length: 9-10mm

W/O COVER VIEW

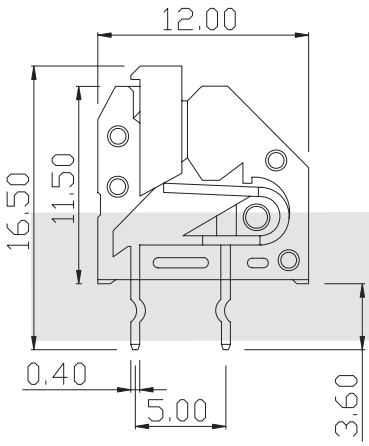

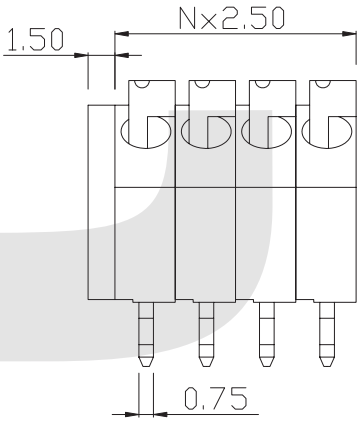

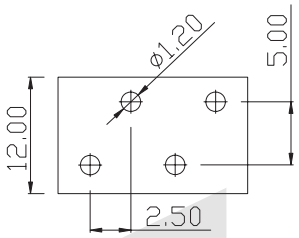

PCB LAYOUT

ORDER INFORMATION

Product NO.: KLS2-2.50V-5.00-XXP X X

- Pos. NO.
- Series No.
- Number of Pole
- Customer Request
- Color: 1=Gray 2=Blue 3=Black 4=Green 5=Orange 6=Red 7=Transparent 8=Yellow 9=White

Screwless Series

KLS2-145R-5.00 Series Pitch=5.00mm

Electrical :
Rated voltage: 300V
Rated current: 8A
Contact resistance: 20mΩ
Insulation resistance: 5000MΩ/1000V
Withstanding Voltage: AC2000V/1Min
Wire range: 22-18AWG 1.0MM²

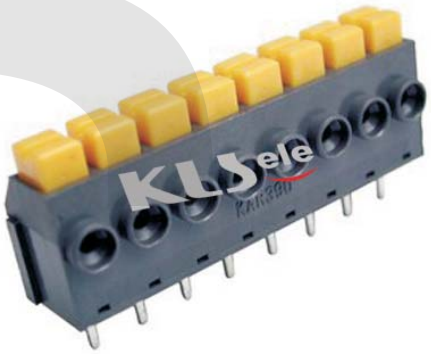

Material
Housing: PBT, UL94V-0
Wire guard: Stainless steel
Pin header: Brass, Tin plated

Mechanical
Temp. Range: -40°C~+105°C
MAX Soldering: +250°C for 5 Sec.
Strip length: 7-7.5mm

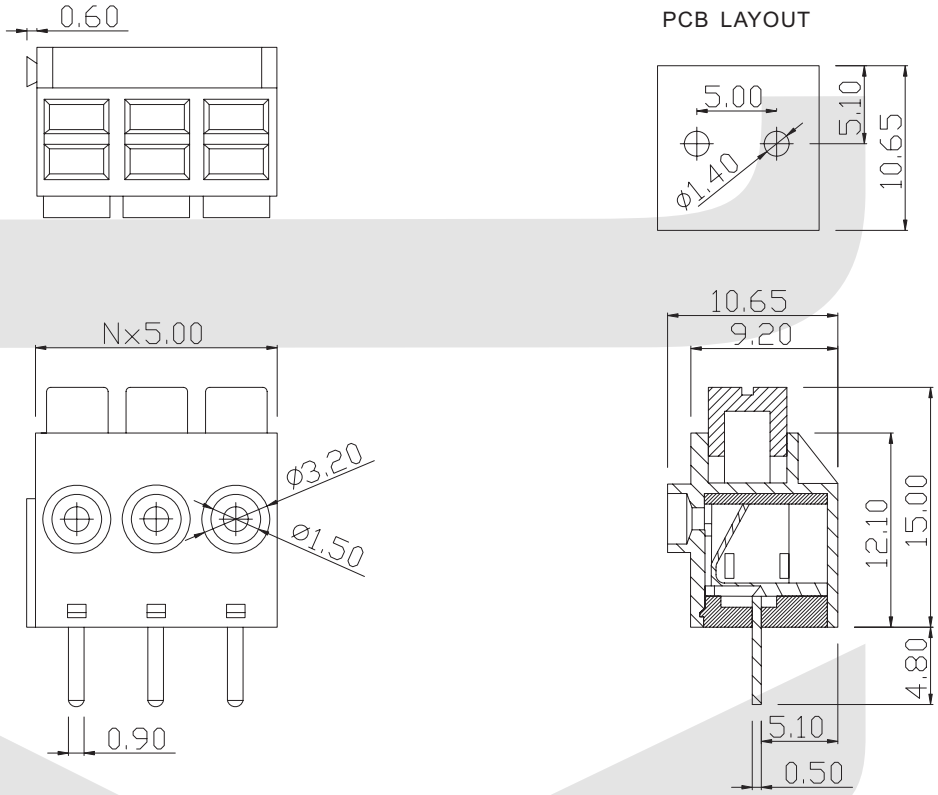

ORDER INFORMATION

Product NO.: KLS2-145R-5.00-XXP X X

Pos. NO.
Series No.
Pitch: 5.00=5.00mm
Number of Pole
Customer Request
Color: 1=Gray 2=Blue 3=Black
4=Green 5=Orange 6=Red
7=Transparent 8=Yellow 9=White

Screwless Series

KLS2-242V-5.00 Series Pitch=5.00mm

Electrical :
Rated voltage: 300V
Rated current: 15A
Contact resistance: 20mΩ
Insulation resistance: 5000MΩ/1000V
Withstanding Voltage: AC2000V/1Min
Wire range: 28-12AWG 2.5MM²

Material
Housing:PA66, UL94V-0
Wire guard : Stainless steel
Pin header: Phosphor bronze, Tin plated

Mechanical
Temp. Range: -40°C~+105°C
Strip length:5-6mm

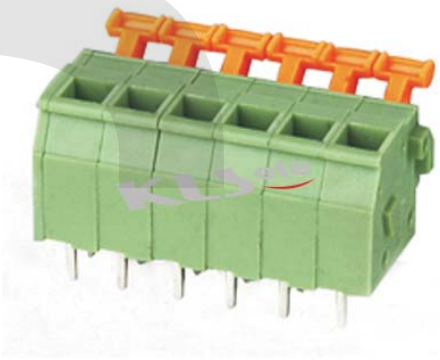

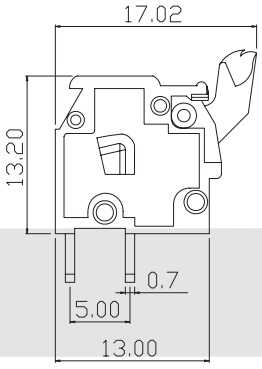

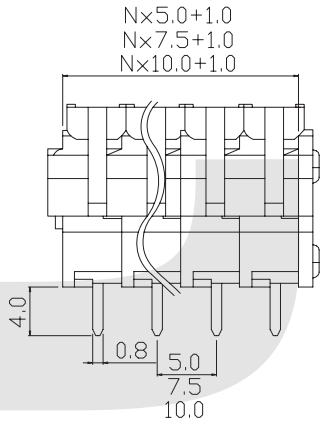

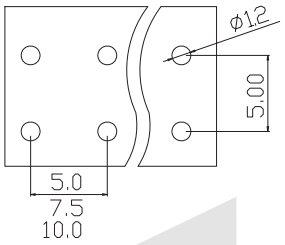

PCB LAYOUT

ORDER INFORMATION

Product NO.: KLS2-242V-5.00-XXP X X

Pos. NO.
Series No.
Pitch: 5.00=5.00mm 7.50=7.50mm
10.00=10.0mm
Number of Pole
Customer Request
Color: 1=Gray 2=Blue 3=Black
4=Green 5=Orange 6=Red
7=Transparent 8=Yellow 9=White

Screwless Series

KLS2-243V-5.00 Series Pitch=5.00mm

Electrical :
Rated voltage: 300V
Rated current: 15A
Contact resistance: 20mΩ
Insulation resistance: 5000MΩ/1000V
Withstanding Voltage: AC2000V/1Min
Wire range: 28-12AWG 2.5MM²

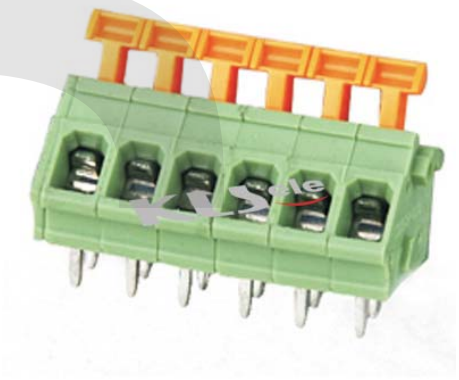

Material
Housing:PA66, UL94V-0
Wire guard : Stainless steel
Pin header: Phosphor bronze, Tin plated

Mechanical
Temp. Range: -40°C~+105°C
Strip length:5-6mm

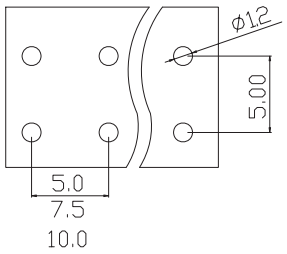

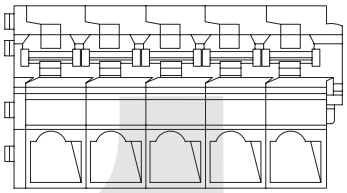

PCB LAYOUT

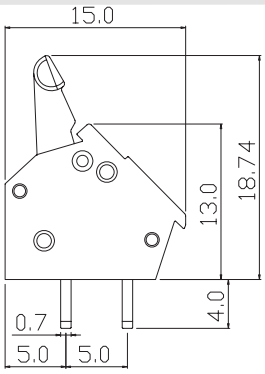

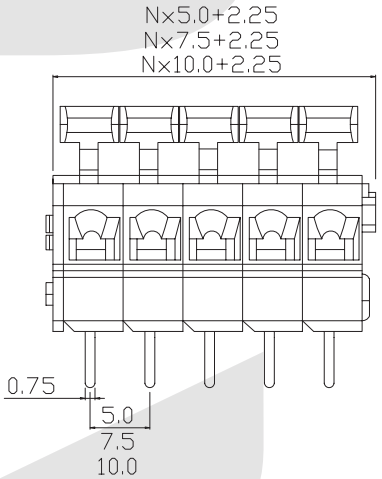

ORDER INFORMATION

Product NO.: KLS2-243V-5.00-XXP X X

Pos. NO.
Series No.
Pitch: 5.00=5.00mm 7.50=7.50mm
10.00=10.0mm
Number of Pole
Customer Request
Color: 1=Gray 2=Blue 3=Black
4=Green 5=Orange 6=Red
7=Transparent 8=Yellow 9=White

Screwless Series

KLS2-242R-5.00 Series Pitch=5.00mm

Electrical :

Rated voltage: 300V
Rated current: 15A
Contact resistance: 20mΩ
Insulation resistance: 5000MΩ/1000V
Withstanding Voltage: AC2000V/1Min
Wire range: 28-12AWG 2.5MM²

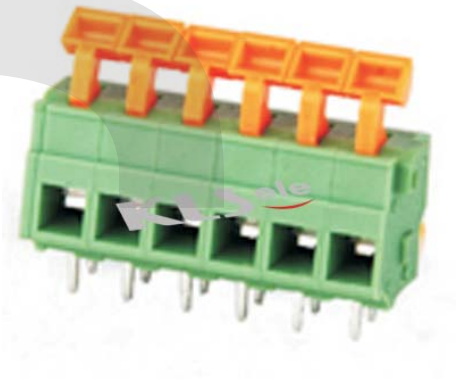

Material

Housing:PA66, UL94V-0
Wire guard: Stainless steel
Pin header: Phosphor bronze, Tin plated

Mechanical

Temp. Range: -40°C~+105°C
Strip length:5-6mm

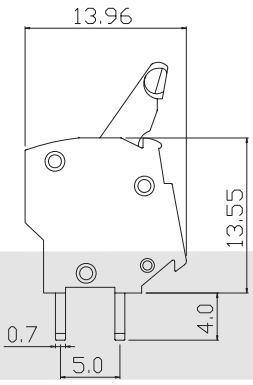

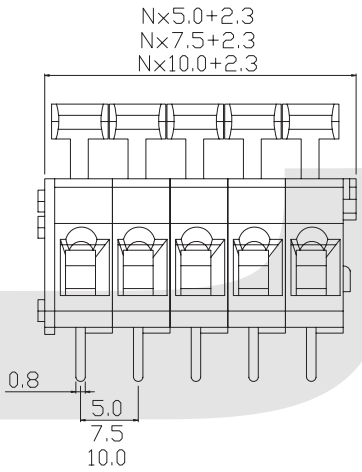

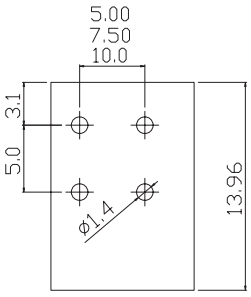

PCB LAYOUT

ORDER INFORMATION

Product NO.: KLS2-242R-5.00-XXP X X

Pos. NO.
Series No.
Pitch: 5.00=5.00mm 7.50=7.50mm
10.00=10.0mm
Number of Pole
Customer Request
Color: 1=Gray 2=Blue 3=Black
4=Green 5=Orange 6=Red
7=Transparent 8=Yellow 9=White

Screwless Series

KLS2-235T-5.00 Series Pitch=5.00mm

Electrical :

Rated voltage: 300V
Rated current: 5A
Contact resistance: 20mΩ
Insulation resistance: 5000MΩ/1000V
Withstanding Voltage: AC1500V/1Min
Wire range: 20-14AWG 1.5MM²

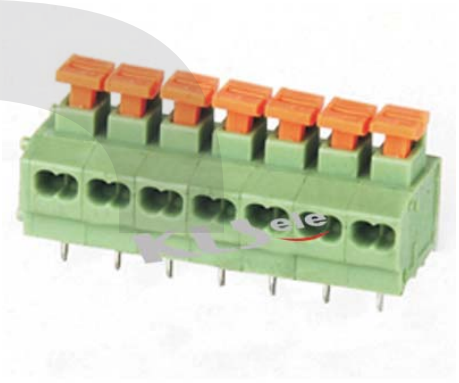

Material

Pin header: Phosphor bronze, Tin plated
Housing: PA66, UL94V-0
Wire guard : Stainless steel

Mechanical

Temp. Range: -40°C~+105°C
MAX Soldering: +250°C for 5 Sec.
Strip length: 9-10mm

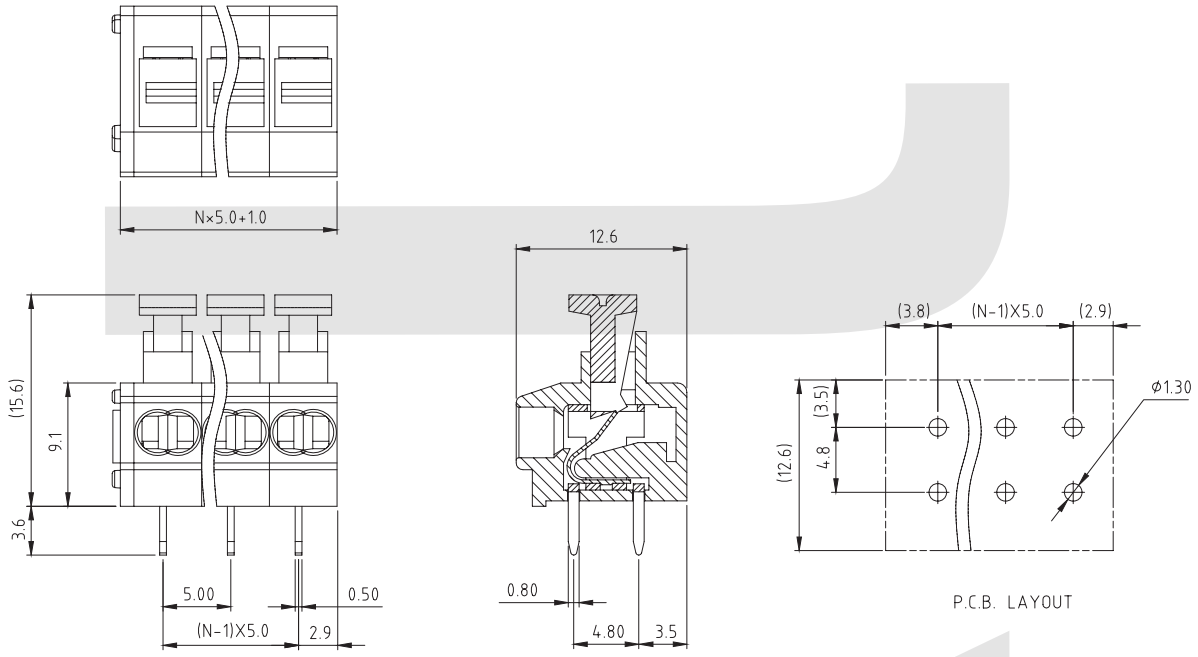

ORDER INFORMATION

Product NO.: KLS2-235T-5.00-XXP X X

Pos. NO.
Series No.
Pitch: 5.00=5.00mm
Number of Pole
Customer Request
Color: 1=Gray 2=Blue 3=Black
4=Green 5=Orange 6=Red
7=Transparent 8=Yellow 9=White

Screwless Series

KLS2-260R-5.00 Series Pitch=5.00mm

Electrical :
Rated voltage: 300V
Rated current: 10A
Contact resistance: 20mΩ
Insulation resistance: 5000MΩ/1000V
Withstanding Voltage: AC2000V/1Min
Wire range: 28-12AWG 2.5MM²

Material
Housing: PA66, UL94V-0
Pin header: Copper, Tin plated

Mechanical
Temp. Range: -40ºC~+105ºC
Strip length:6-7mm



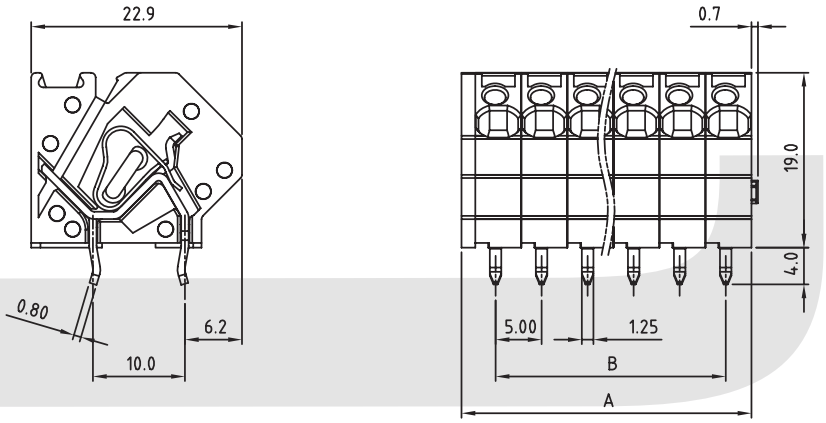

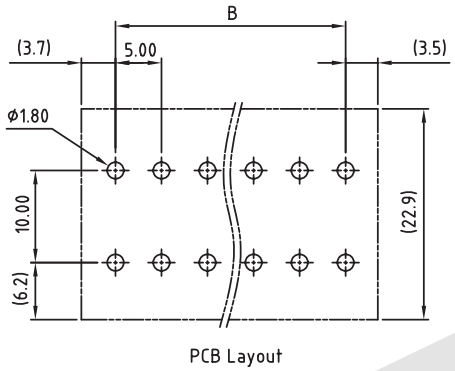

PCB Layout

ORDER INFORMATION

Product NO.: KLS2-260R-5.00-XXP X X

Pos. NO.
Series No.
Pitch: 5.00=5.00mm
Number of Pole
Customer Request
Color: 1=Gray 2=Blue 3=Black
4=Green 5=Orange 6=Red
7=Transparent 8=Yellow 9=White

Screwless Series

KLS2-206-5.00/7.50 Series Pitch=5.00mm/7.50mm

Electrical :
Rated voltage: 300V
Rated current: 15A
Contact resistance: 20mΩ
Insulation resistance: 5000MΩ/1000V
Withstanding Voltage: AC2000V/1Min
Wire range: 28-12AWG 2.5MM²

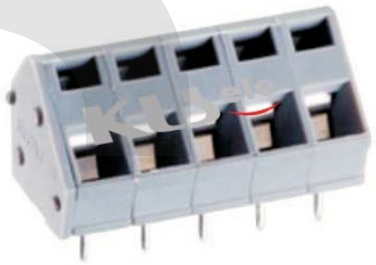

Material
Housing:PA66, UL94V-0
Wire guard: Stainless steel
Pin header: Phosphor bronze, Tin plated

Mechanical
Temp. Range: -40°C~+105°C
Strip length:5-6mm

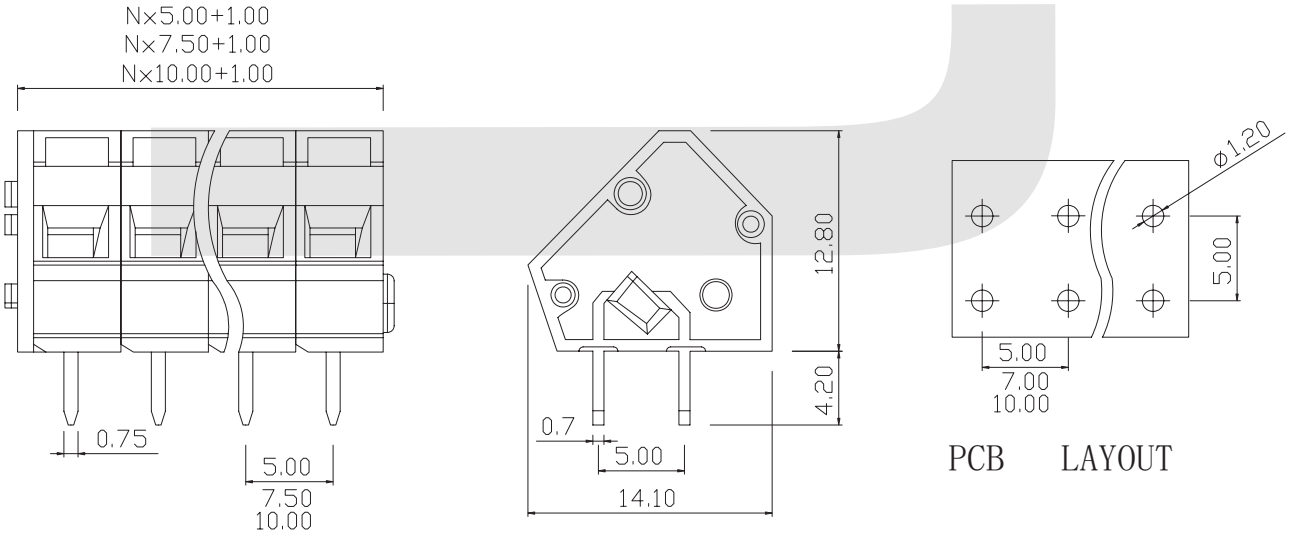

ORDER INFORMATION

Product NO.: KLS2-206-5.00-XXP X X

- Pos. NO.
- Series No.
- Pitch: 5.00=5.00mm 7.50=7.50mm 10.00=10.00mm
- Number of Pole
- Customer Request
- Color: 1=Gray 2=Blue 3=Black 4=Green 5=Orange 6=Red 7=Transparent 8=Yellow 9=White

Screwless Series

KLS2-206B-5.00/7.50 Series Pitch=5.00mm/7.50mm

Electrical :

Rated voltage: 300V
Rated current: 10A
Contact resistance: 20mΩ
Insulation resistance: 5000MΩ/1000V
Withstanding Voltage: AC2000V/1Min
Wire range: 28-12AWG 2.5MM²

Material

Housing: PA66, UL94V-0
Pin header: Copper, Tin plated

Mechanical

Temp. Range: -40°C~+105°C
Strip length:6-7mm



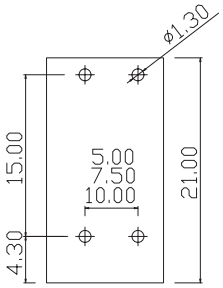

PCB LAYOUT

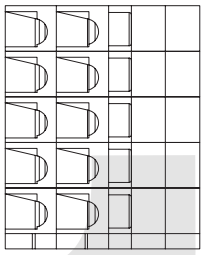

W/O COVER VIEW

N×5.00+1.00
N×7.50+1.00
N×10.00+1.00

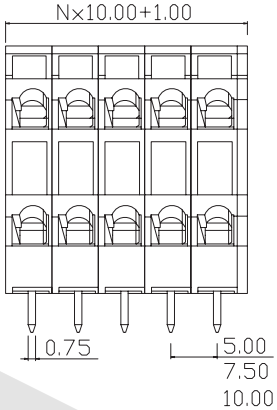

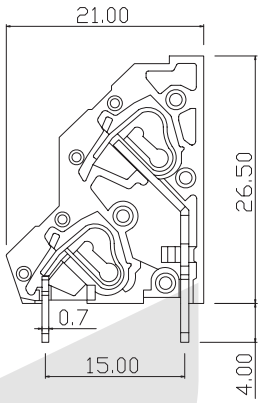

ORDER INFORMATION

Product NO.: KLS2-206B-5.00-XXP X X

Pos. NO.
Series No.
Pitch: 5.00=5.00mm 7.50=7.50mm
10.00=10.00mm
Number of Pole
Customer Request
Color: 1=Gray 2=Blue 3=Black
4=Green 5=Orange 6=Red
7=Transparent 8=Yellow 9=White

Screwless Series

KLS2-143R-7.62 Series Pitch=7.62mm

Electrical :

Rated voltage: 300V
Rated current: 10A
Contact resistance: 20mΩ
Insulation resistance: 5000MΩ/1000V
Withstanding Voltage: AC2000V/1Min
Wire range: 22-14AWG 1.5MM²

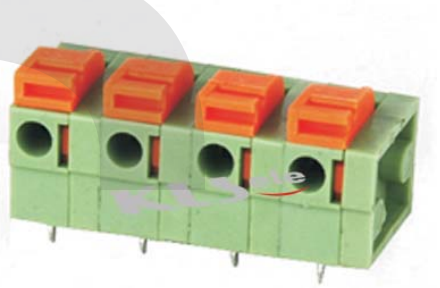

Material

Housing: PA66, UL94V-0
Wire guard: Stainless steel
Pin header: Brass, Tin plated

Mechanical

Temp. Range: -40°C~+105°C
MAX Soldering: +250°C for 5 Sec.
Strip length: 10mm

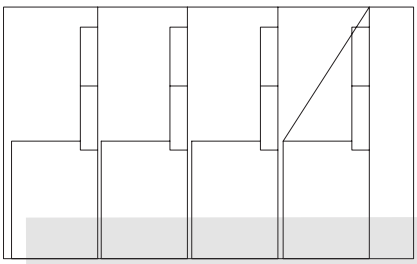

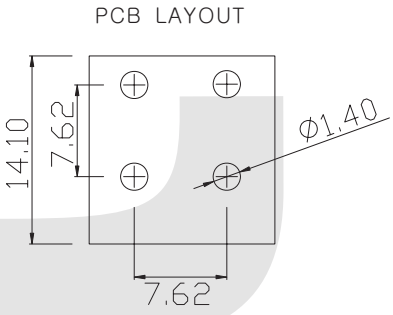

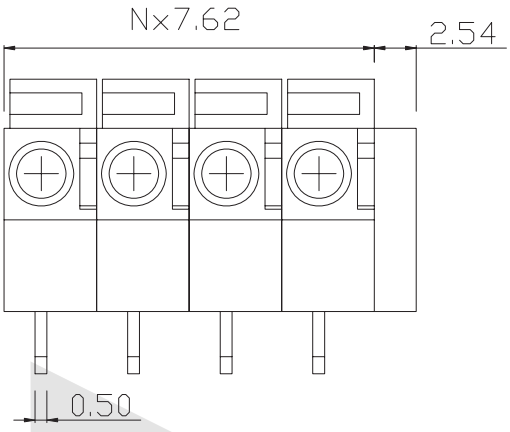

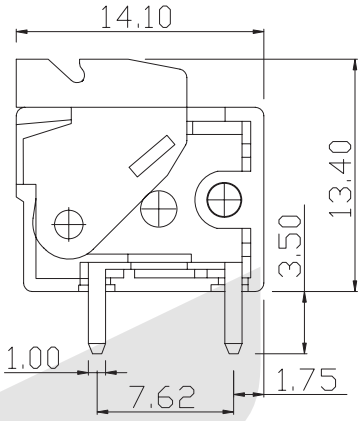

ORDER INFORMATION

Product NO.: KLS2-143R-7.62-XXP X X

Pos. NO.
Series No.
Pitch: 7.62=7.62mm
Number of Pole
Customer Request
Color: 1=Gray 2=Blue 3=Black
4=Green 5=Orange 6=Red
7=Transparent 8=Yellow 9=White

Barrier Series

KLS2-56B-6.35 Series

Electrical
Voltage rating : 300VAC
Current rating : 10Amps/way max.
Wire range : 16-22AWG
Operation temperature : -40°C to+105°C
Torque : 4kg/cm
Insulation Resistance：500MΩ/DC500V
Withstanding Voltage：AC2000V/Min

MATERIAL
Housing : PA 66 UL94V-0
Terminal : Brass 0.8t, Tin plated
Screws : M2.5 Steel, Nickel Plated

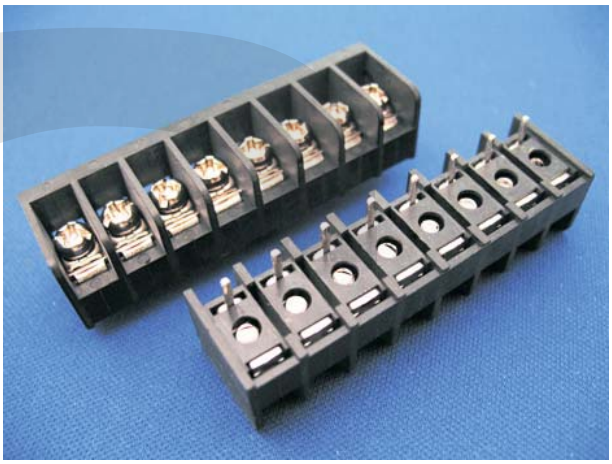

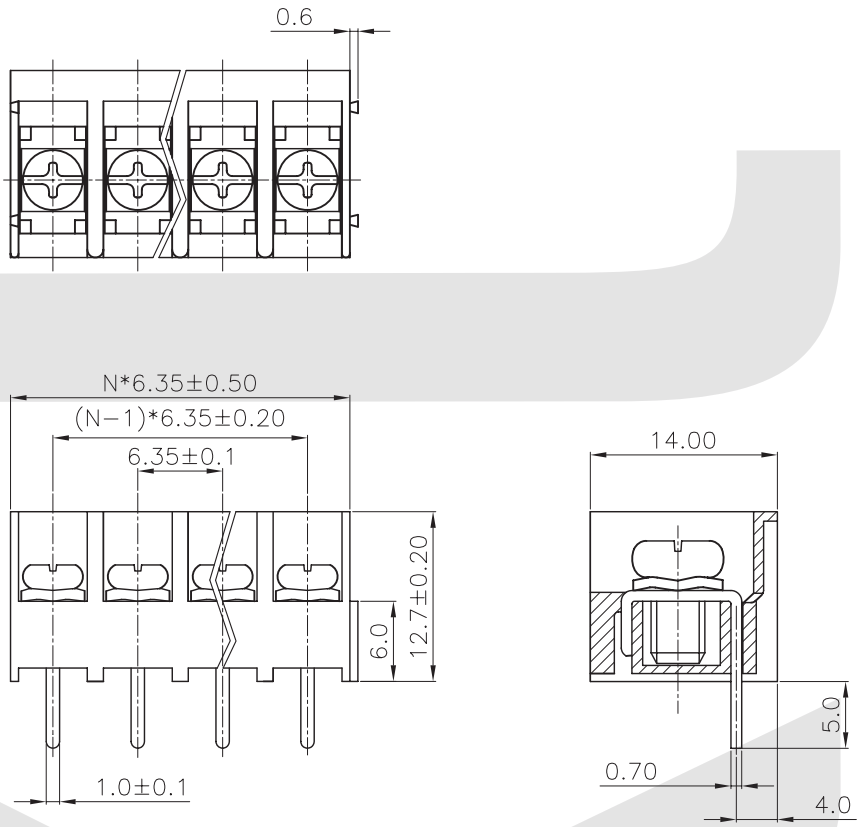

ORDER INFORMATION

Product NO.: KLS2-56B-6.35 XXP X X

- Pos. NO.
- Series No.
- Pitch 6.35=6.35mm
- Pin Number
- C=With cover D=Without cover
- A=Mount Ends B=Barrier Ends

Barrier Series

KLS2-56F-6.35 Series

Electrical
Voltage rating : 300VAC
Current rating : 10Amps/way max.
Wire range : 16-22AWG
Operation temperature : -40°C to+105°C
Torque : 4kg/cm
Insulation Resistance：500MΩ/DC500V
Withstanding Voltage：AC2000V/Min

MATERIAL
Housing : PA 66 UL94V-0
Terminal : Brass 0.8t, Tin plated
Screws : M2.5 Steel, Nickel Plated

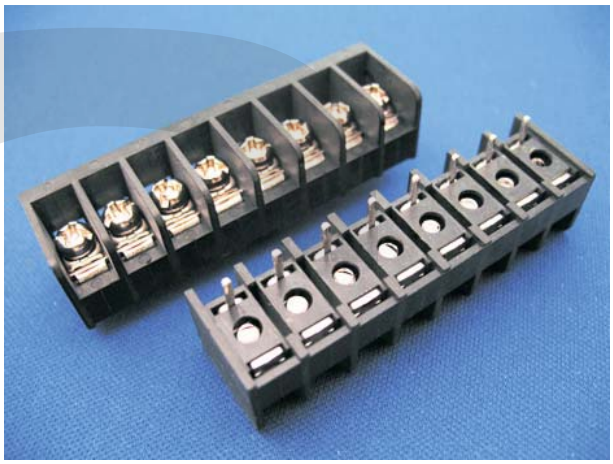

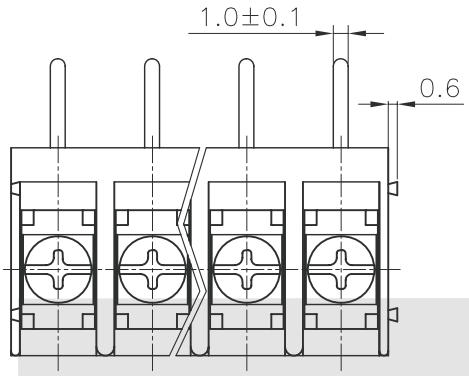

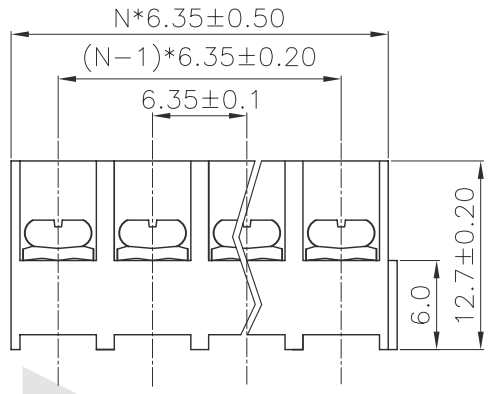

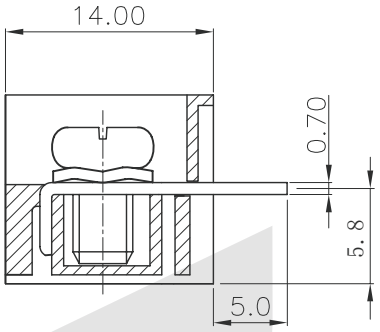

ORDER INFORMATION

Product NO.: KLS2-56F-6.35 XXP X X

- Pos. NO.
- Series No.
- Pitch 6.35=6.35mm
- Pin Number
- C=With cover D=Without cover
- A=Mount Ends B=Barrier Ends

Barrier Series

KLS2-56G-6.35 Series

Electrical
Voltage rating : 300VAC
Current rating : 10Amps/way max.
Wire range : 16-22AWG
Operation temperature : -40°C to+105°C
Torque : 4kg/cm
Insulation Resistance：500MΩ/DC500V
Withstanding Voltage：AC2000V/Min

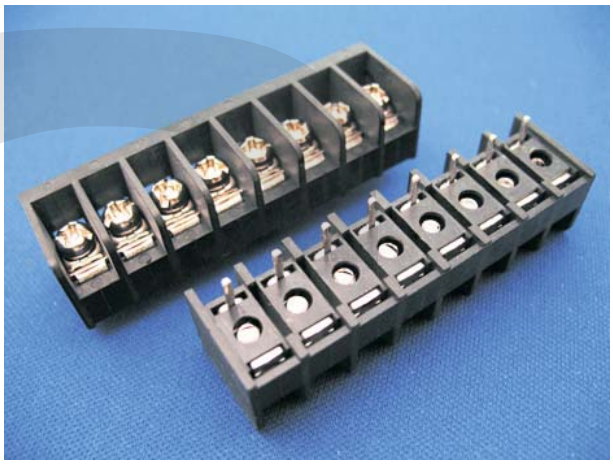

MATERIAL
Housing : PA 66 UL94V-0
Terminal : Brass 0.8t, Tin plated
Screws : M2.5 Steel, Nickel Plated

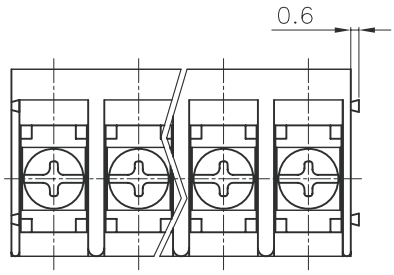

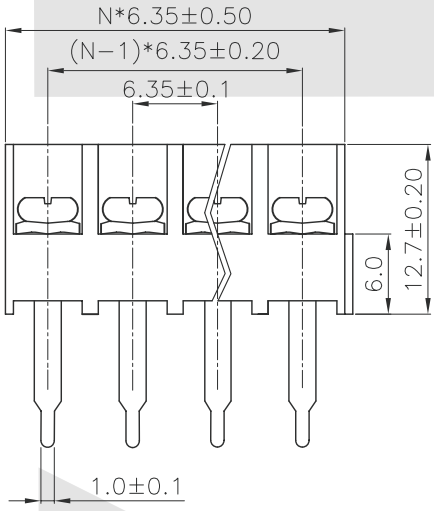

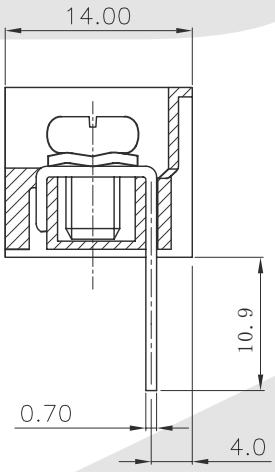

ORDER INFORMATION

Product NO.: KLS2-56G-6.35 XXP X X

- Pos. NO.
- Series No.
- Pitch 6.35=6.35mm
- Pin Number
- C=With cover D=Without cover
- A=Mount Ends B=Barrier Ends

Barrier Series

KLS2-25A-7.62 Series

Electrical

Voltage rating : 300V
Current rating : 10A
Wire range : 14-22AWG
Operation temperature : -40°C to+105°C
Torque : 4kg/cm
Insulation Resistance：500MΩ/DC500V
Withstanding Voltage：AC2000V/Min

MATERIAL

Housing : PA 66 UL94V-0
Terminal : Brass 0.8t, Tin plated
Screws : M3 Steel, Nickel Plated

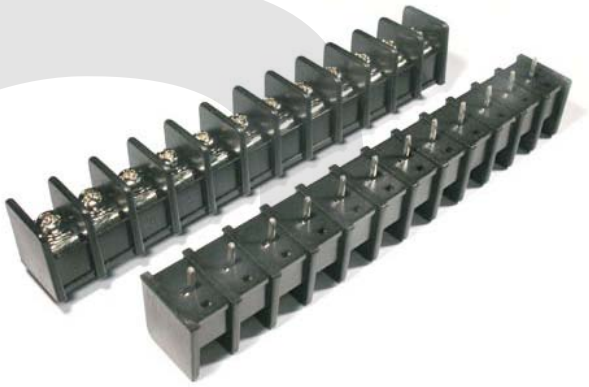

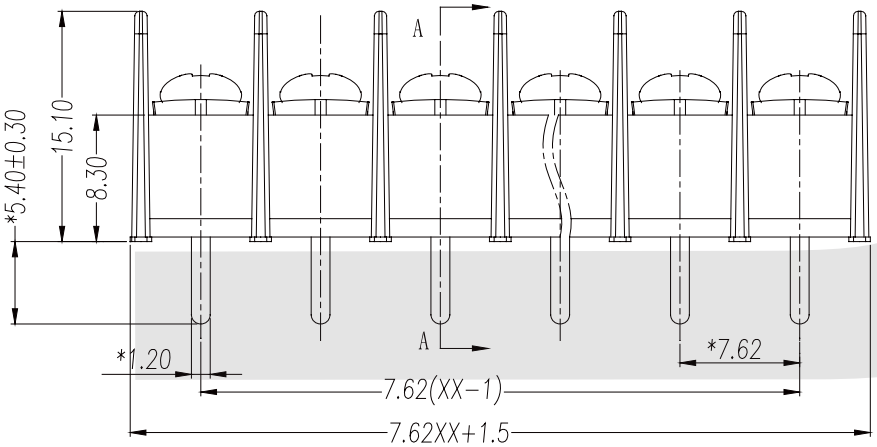

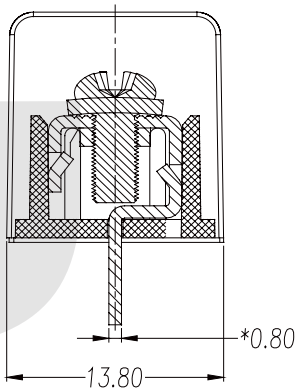

SECTION A-A

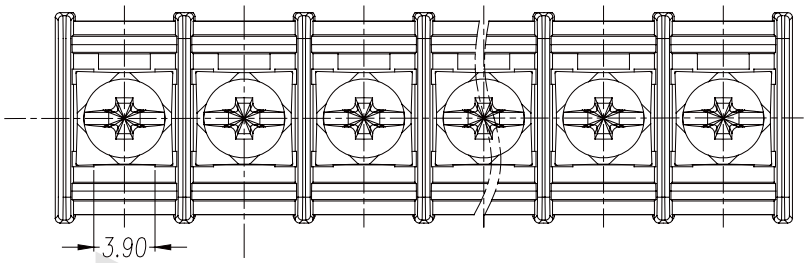

ORDER INFORMATION

Product NO.: KLS2-25A-7.62 XXP B

Pos. NO.
Series No.
Pitch 7.62=7.62mm
Pin Number
A=Mount Ends B=Barrier Ends

Barrier Series

KLS2-25A-7.62 Series

Electrical
Voltage rating : 300V
Current rating : 10A
Wire range : 14-22AWG
Operation temperature : -40°C to+105°C
Torque : 4kg/cm
Insulation Resistance：500MΩ/DC500V
Withstanding Voltage：AC2000V/Min

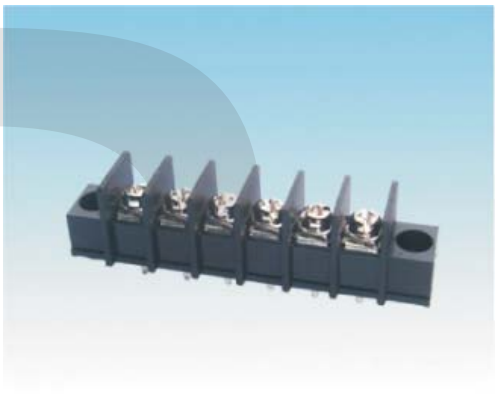

MATERIAL
Housing : PA 66 UL94V-0
Terminal : Brass 0.8t, Tin plated
Screws : M3 Steel, Nickel Plated

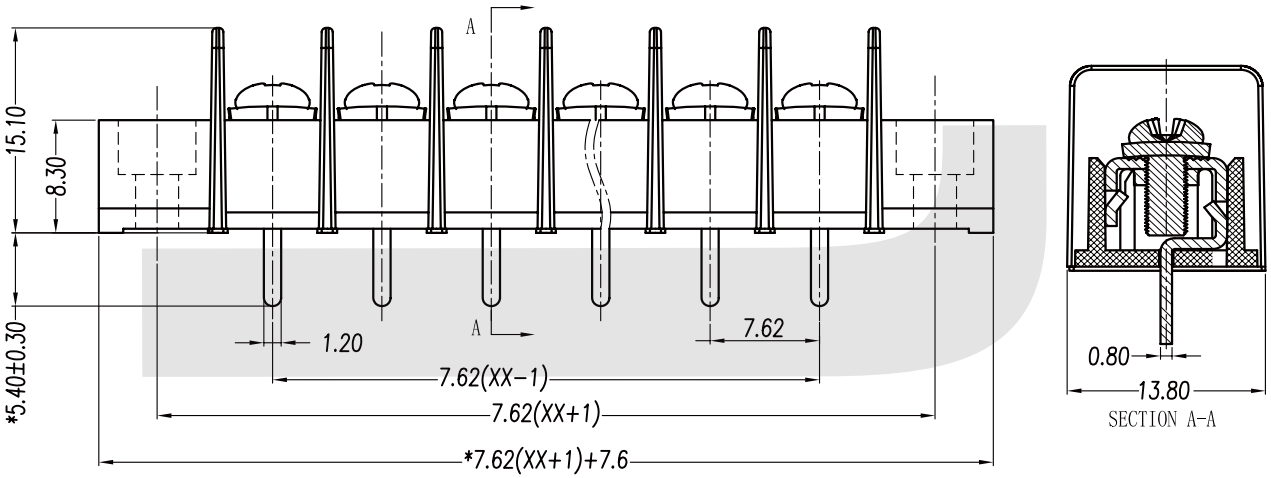

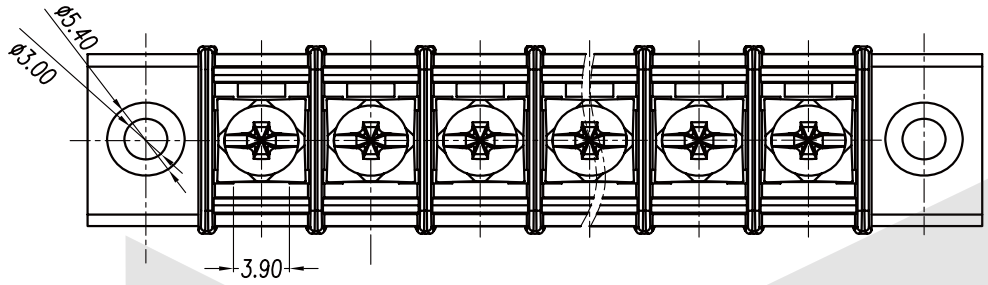

ORDER INFORMATION

Product NO.: KLS2-25A-7.62 XXP A

Pos. NO.
Series No.
Pitch 7.62=7.62mm
A=Mount Ends B=Barrier Ends
Pin Number

Barrier Series

KLS2-25B-7.62 Series

Electrical
Voltage rating : 300V
Current rating : 10A
Wire range : 14-22AWG
Operation temperature : -40°C to+105°C
Torque : 4kg/cm
Insulation Resistance：500MΩ/DC500V
Withstanding Voltage：AC2000V/Min

MATERIAL
Housing : PA 66 UL94V-0
Terminal : Brass 0.8t, Tin plated
Screws : M3 Steel, Nickel Plated

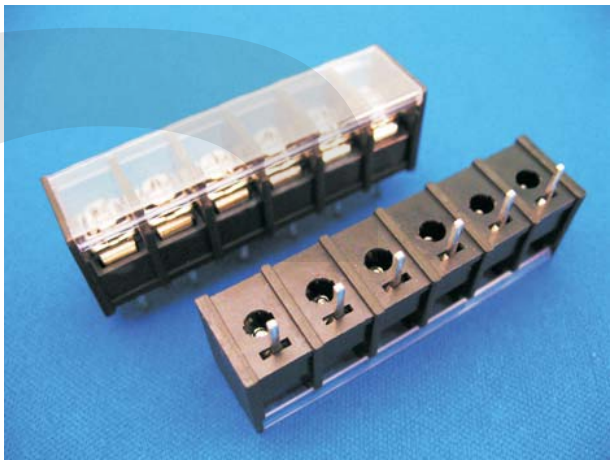

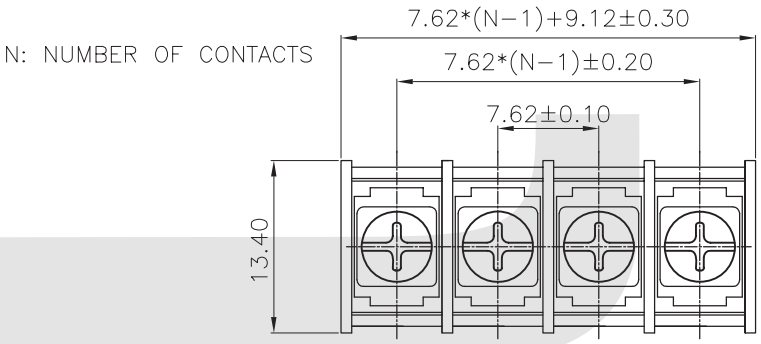

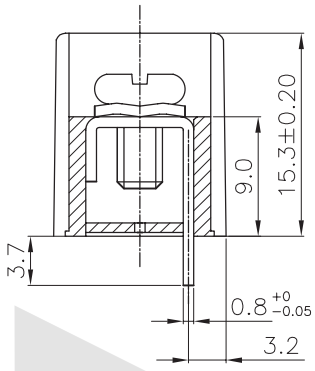

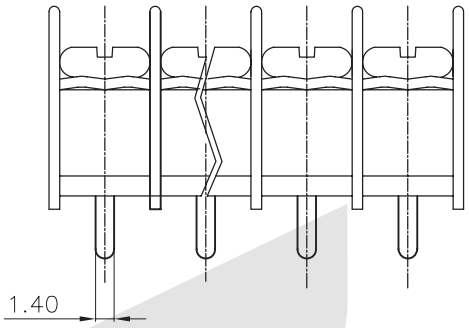

ORDER INFORMATION

Product NO.: KLS2-25B-7.62 XXP B

Pos. NO.
Series No.
Pitch 7.62=7.62mm
Pin Number
A=Mount Ends B=Barrier Ends

Barrier Series

KLS2-25B-7.62 Series

Electrical
Voltage rating : 300V
Current rating : 10A
Wire range : 14-22AWG
Operation temperature : -40°C to+105°C
Torque : 4kg/cm
Insulation Resistance：500MΩ/DC500V
Withstanding Voltage：AC2000V/Min

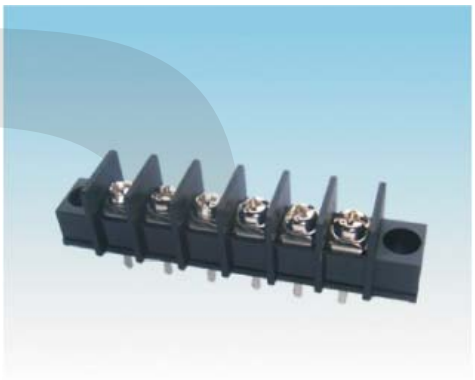

MATERIAL
Housing : PA 66 UL94V-0
Terminal : Brass 0.8t, Tin plated
Screws : M3 Steel, Nickel Plated

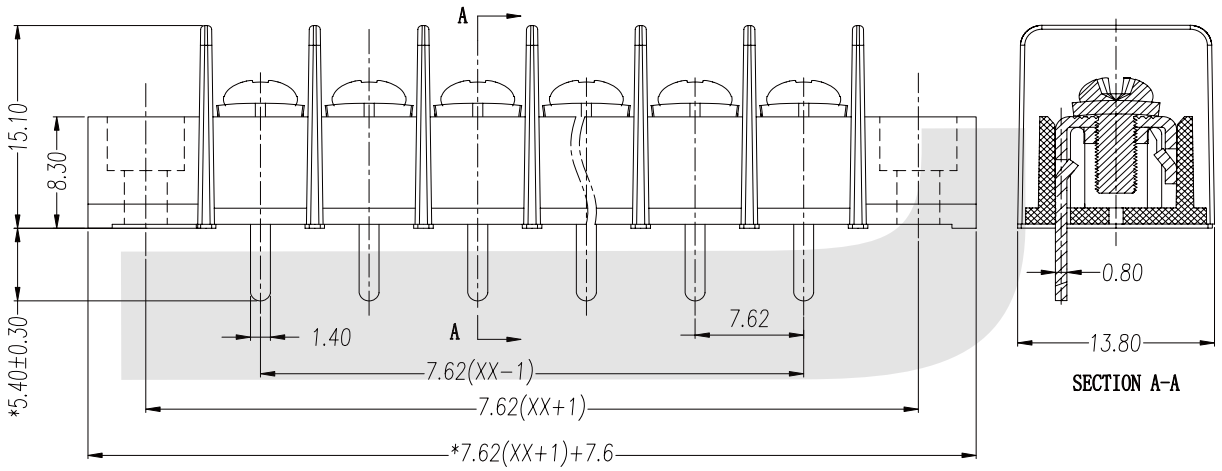

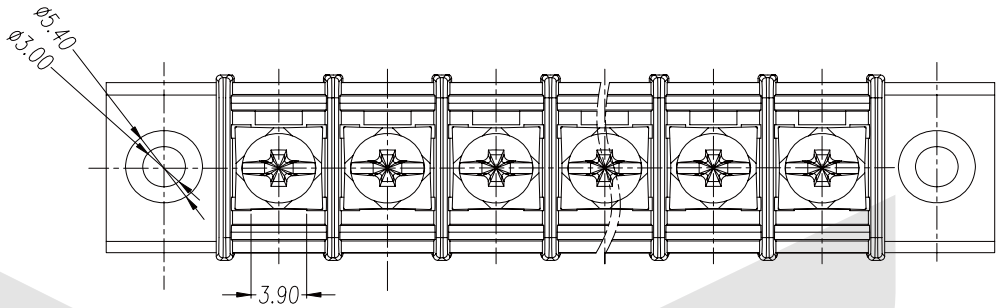

ORDER INFORMATION

Product NO.: KLS2-25B-7.62 XXP A

Pos. NO.
Series No.
Pitch 7.62=7.62mm
A=Mount Ends B=Barrier Ends
Pin Number

Barrier Series

KLS2-25C-7.62 Series

Electrical
Voltage rating : 300V
Current rating : 10A
Wire range : 14-22AWG
Operation temperature : -40°C to+105°C
Torque : 4kg/cm
Insulation Resistance：500MΩ/DC500V
Withstanding Voltage：AC2000V/Min

MATERIAL
Housing : PA 66 UL94V-0
Terminal : Brass 0.8t, Tin plated
Screws : M3 Steel, Nickel Plated

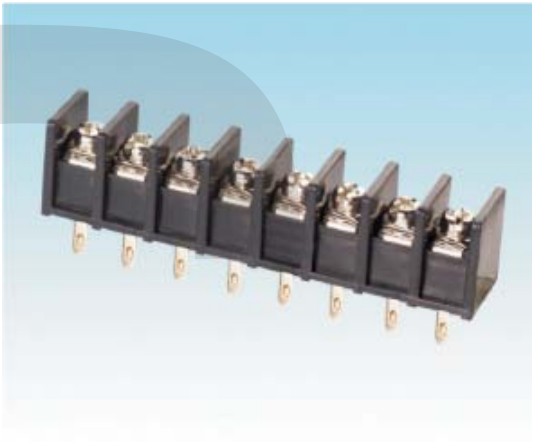

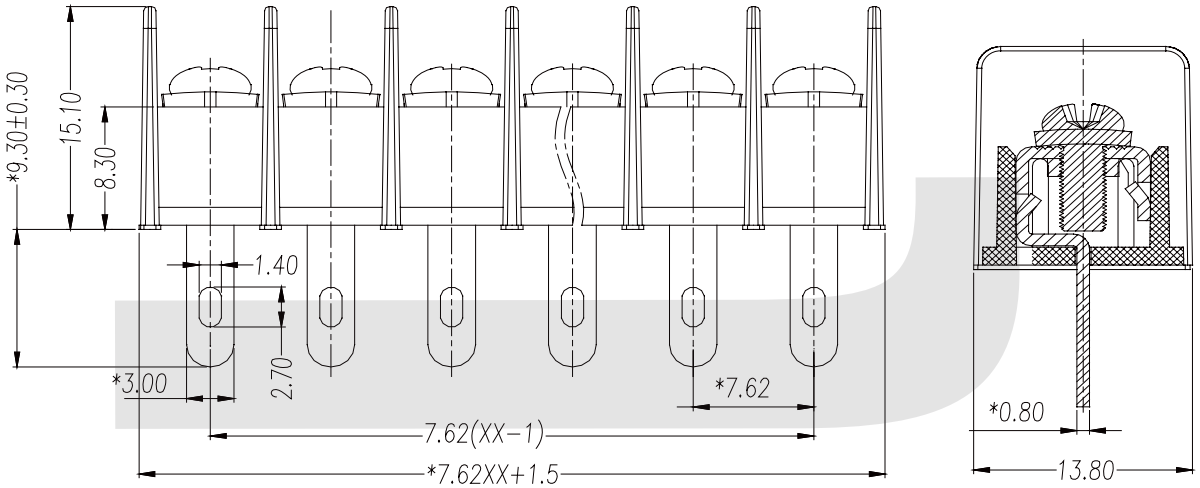

SECTION A-A

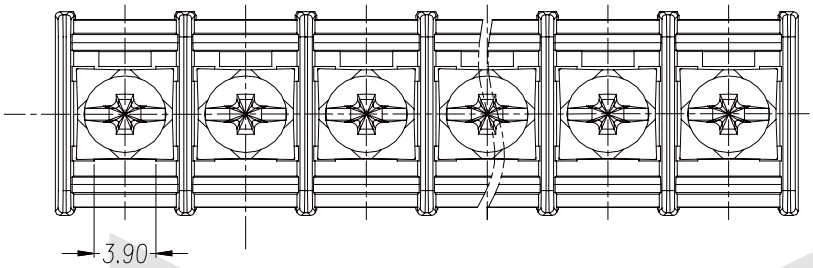

ORDER INFORMATION

Product NO.: KLS2-25C-7.62 XXP B

Pos. NO.
Series No.
Pitch 7.62=7.62mm
Pin Number
A=Mount Ends B=Barrier Ends

Barrier Series

KLS2-25C-7.62 Series

Electrical
Voltage rating : 300V
Current rating : 10A
Wire range : 14-22AWG
Operation temperature : -40°C to+105°C
Torque : 4kg/cm
Insulation Resistance：500MΩ/DC500V
Withstanding Voltage：AC2000V/Min



MATERIAL
Housing : PA 66 UL94V-0
Terminal : Brass 0.8t, Tin plated
Screws : M3 Steel, Nickel Plated

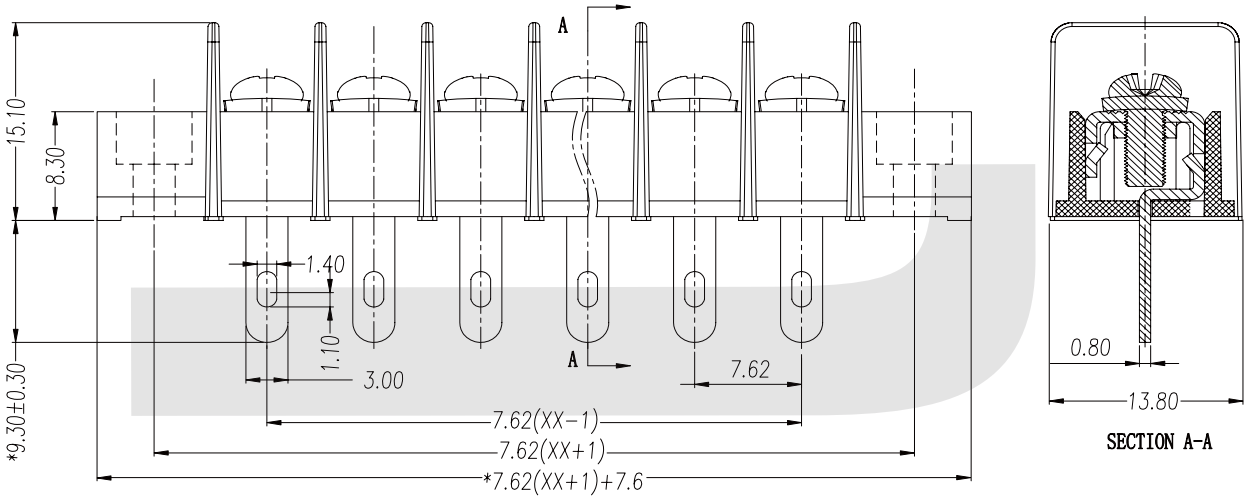

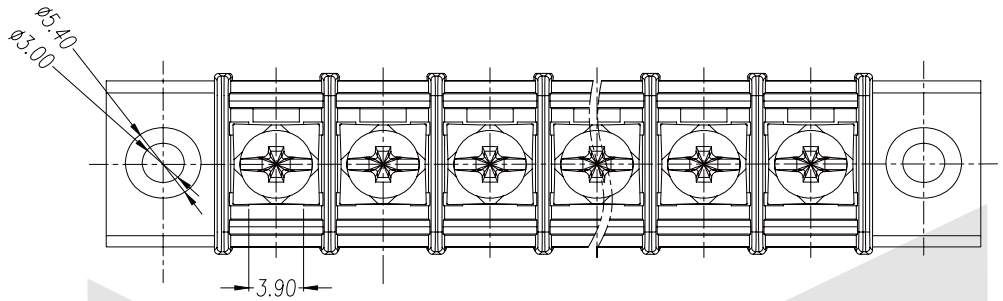

ORDER INFORMATION

Product NO.: KLS2-25C-7.62 XXP A

Pos. NO.
Series No.
Pitch 7.62=7.62mm
A=Mount Ends B=Barrier Ends
Pin Number

Barrier Series

KLS2-56B-8.25 Series

Electrical

Voltage rating : 300V
Current rating : 10A
Wire range : 14-22AWG
Operation temperature : -40°C to+105°C
Torque : 4kg/cm
Insulation Resistance：500MΩ/DC500V
Withstanding Voltage：AC2000V/Min



MATERIAL

Housing : PA 66 UL94V-0
Terminal : Brass 0.8t, Tin plated
Screws : M3 Steel, Nickel Plated

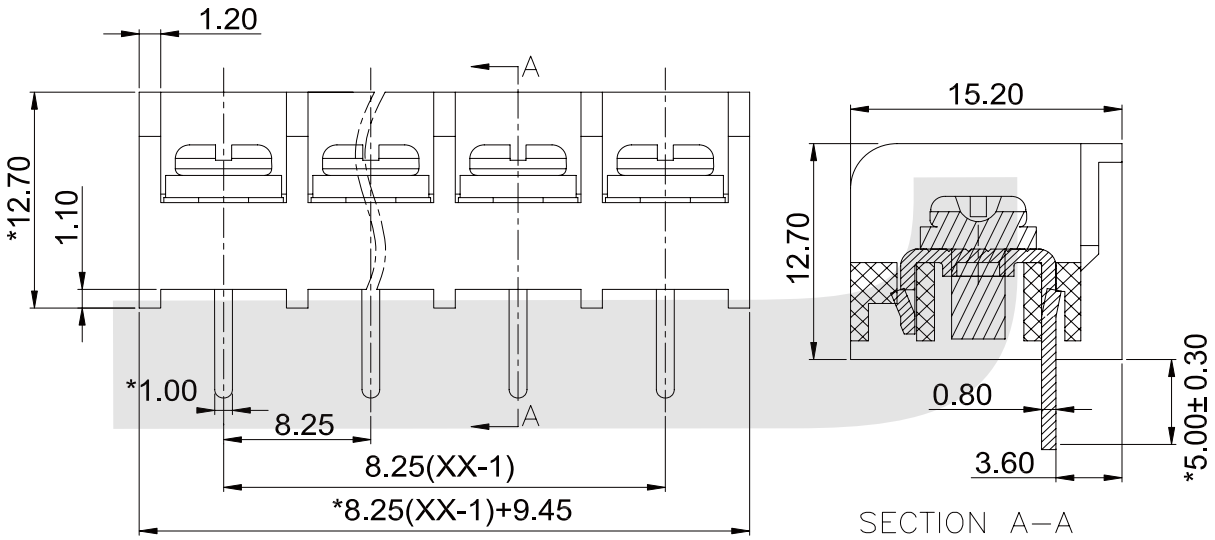

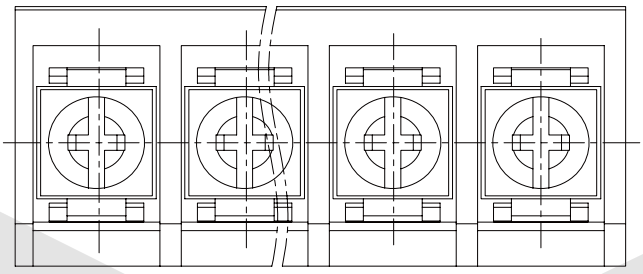

ORDER INFORMATION

Product NO.: KLS2-56B-8.25 XXP B

Pos. NO.
Series No.
Pitch 8.25=8.25mm
Pin Number
A=Mount Ends B=Barrier Ends

Barrier Series

KLS2-35A-8.25 Series

Electrical

Voltage rating : 300V
Current rating : 15A
Wire range : 14-22AWG
Operation temperature : -40°C to+105°C
Torque : 4kg/cm
Insulation Resistance：500MΩ/DC500V
Withstanding Voltage：AC2000V/Min

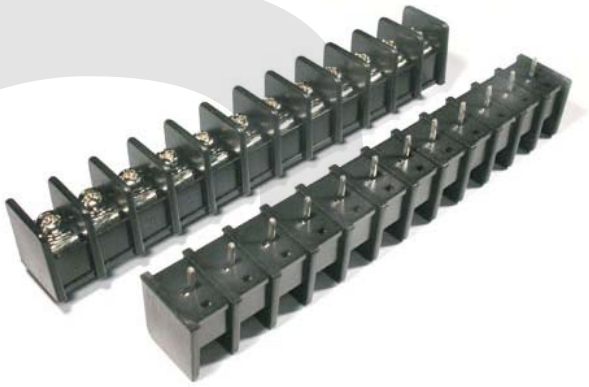

MATERIAL

Housing : PA 66 UL94V-0
Terminal : Brass 0.8t, Tin plated
Screws : M3 Steel, Nickel Plated

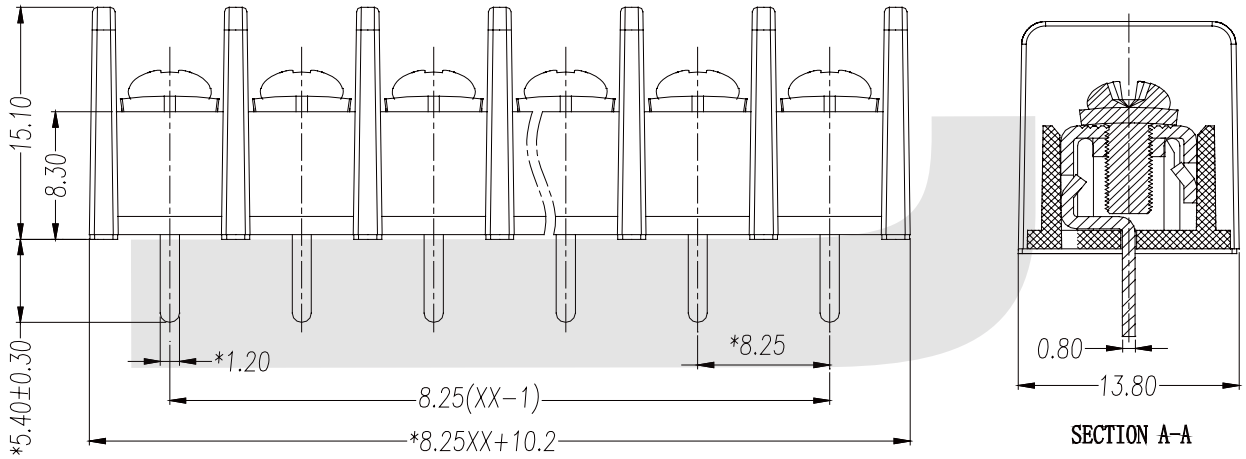

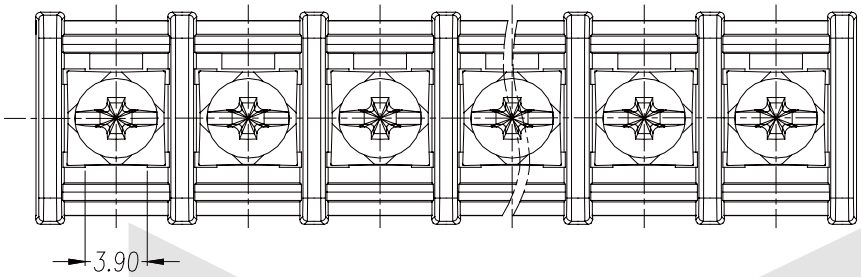

ORDER INFORMATION

Product NO.: KLS2-35A-8.25 XXP B

Pos. NO.
Series No.
Pitch 8.25=8.25mm
Pin Number
A=Mount Ends B=Barrier Ends

Barrier Series

KLS2-35A-8.25 Series

Electrical
Voltage rating : 300V
Current rating : 15A
Wire range : 14-22AWG
Operation temperature : -40°C to+105°C
Torque : 4kg/cm
Insulation Resistance：500MΩ/DC500V
Withstanding Voltage：AC2000V/Min

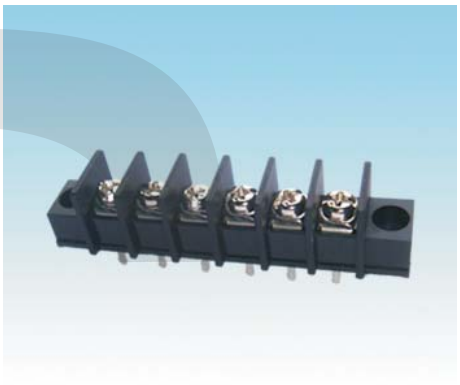

MATERIAL
Housing : PA 66 UL94V-0
Terminal : Brass 0.8t, Tin plated
Screws : M3 Steel, Nickel Plated

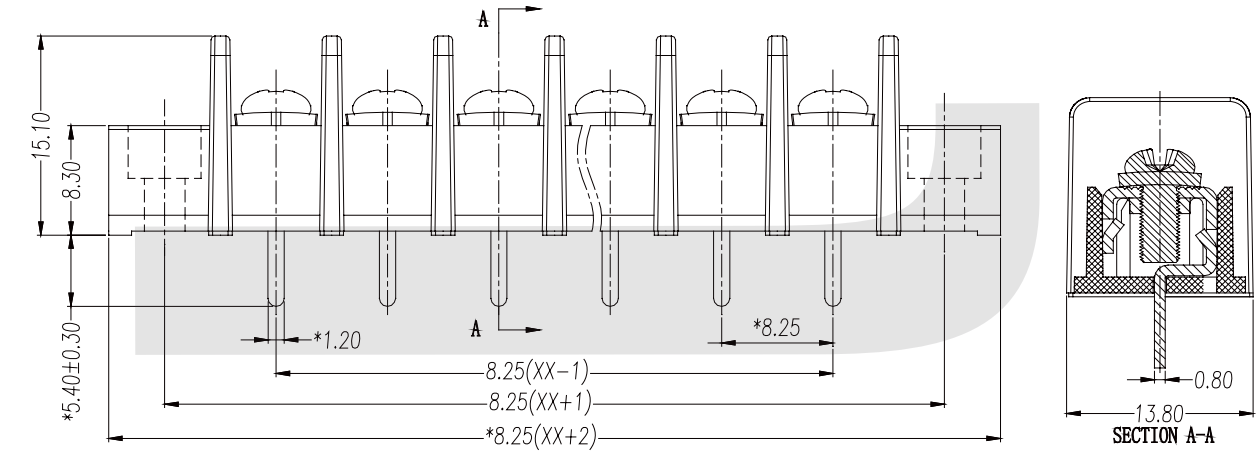

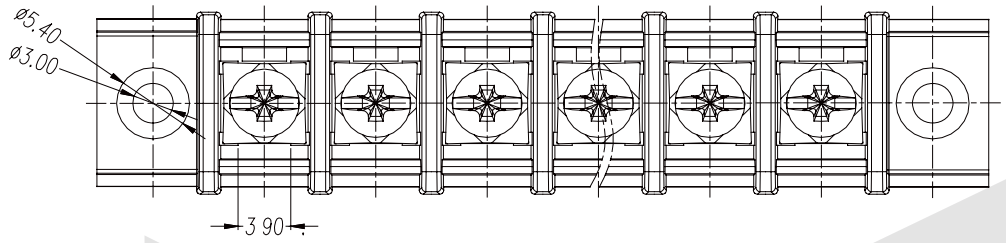

ORDER INFORMATION

Product NO.: KLS2-35A-8.25 XXP A

Pos. NO.
Series No.
Pitch 8.25=8.25mm
A=Mount Ends B=Barrier Ends
Pin Number

Barrier Series

KLS2-35B-8.25 Series

Electrical
Voltage rating : 300V
Current rating : 15A
Wire range : 14-22AWG
Operation temperature : -40°C to+105°C
Torque : 4kg/cm
Insulation Resistance：500MΩ/DC500V
Withstanding Voltage：AC2000V/Min

MATERIAL
Housing : PA 66 UL94V-0
Terminal : Brass 0.8t, Tin plated
Screws : M3 Steel, Nickel Plated

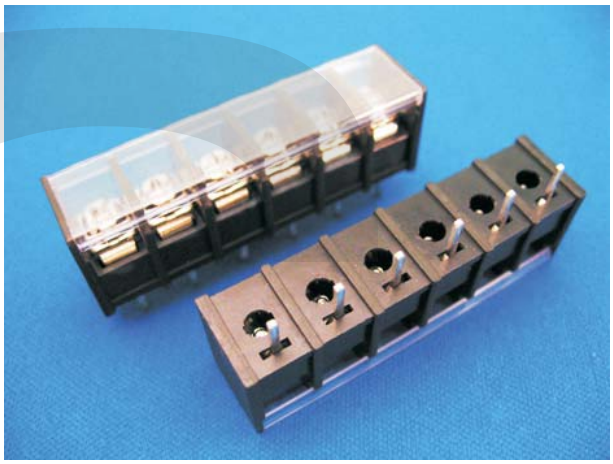

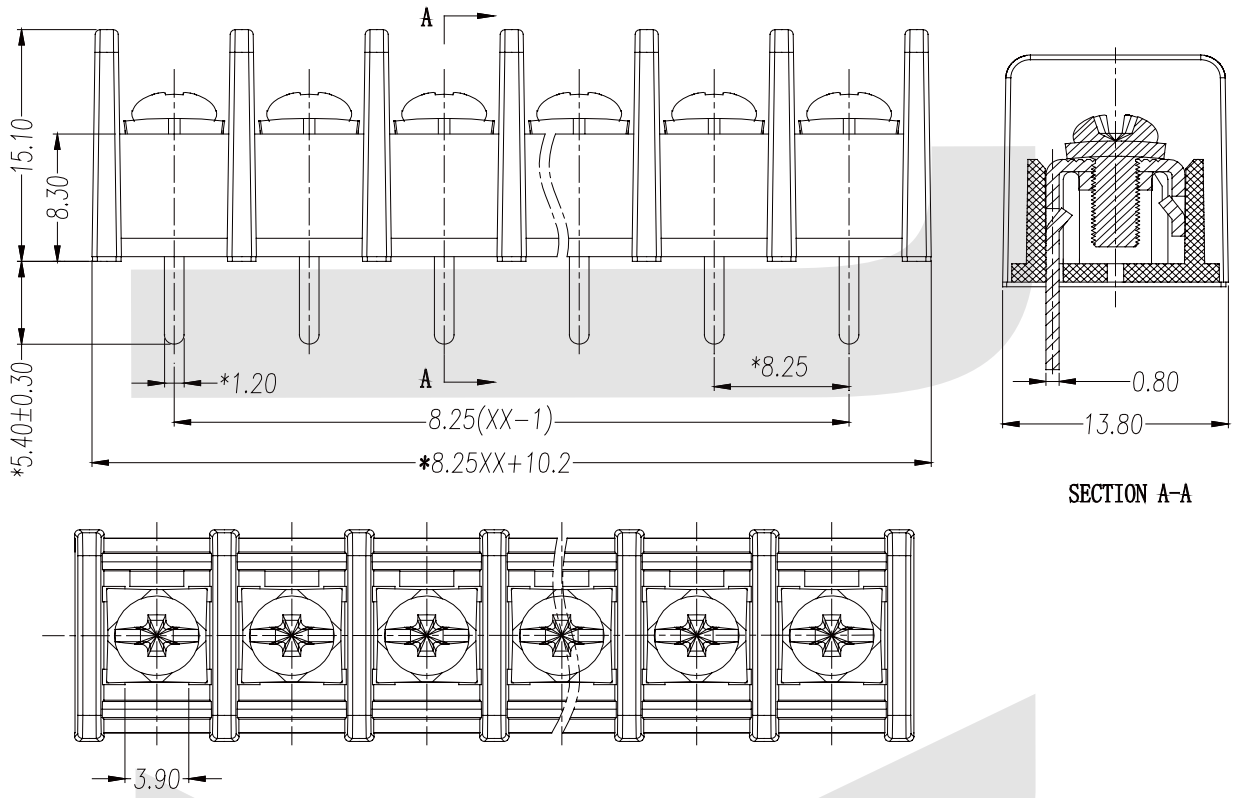

ORDER INFORMATION

Product NO.: KLS2-35B-8.25 XXP B

Pos. NO.
Series No.
Pitch 8.25=8.25mm
Pin Number
A=Mount Ends B=Barrier Ends

Barrier Series

KLS2-35B-8.25 Series

Electrical

Voltage rating : 300V
Current rating : 15A
Wire range : 14-22AWG
Operation temperature : -40°C to+105°C
Torque : 4kg/cm
Insulation Resistance: 500MΩ/DC500V
Withstanding Voltage: AC2000V/Min

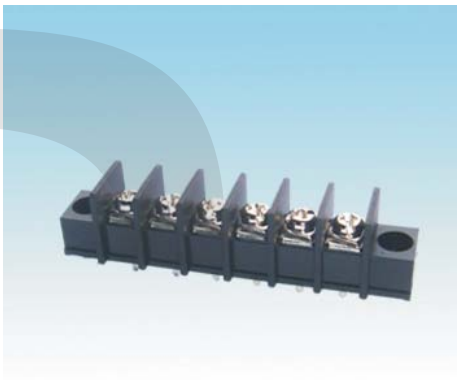

MATERIAL

Housing : PA 66 UL94V-0
Terminal : Brass 0.8t, Tin plated
Screws : M3 Steel, Nickel Plated

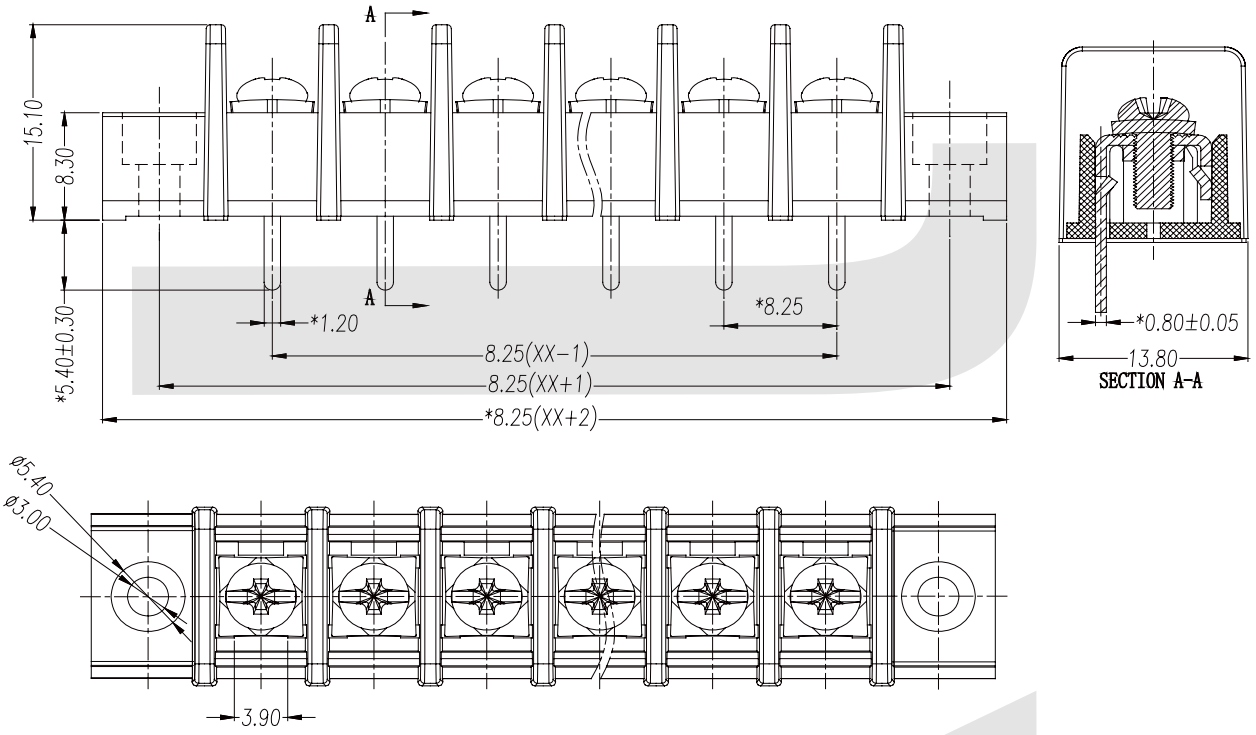

ORDER INFORMATION

Product NO.: KLS2-35B-8.25 XXP A

Pos. NO.
Series No.
Pitch 8.25=8.25mm
A=Mount Ends B=Barrier Ends
Pin Number

Barrier Series

KLS2-35C-8.25 Series

Electrical
Voltage rating : 300V
Current rating : 15A
Wire range : 14-22AWG
Operation temperature : -40°C to+105°C
Torque : 4kg/cm
Insulation Resistance：500MΩ/DC500V
Withstanding Voltage：AC2000V/Min

MATERIAL
Housing : PA 66 UL94V-0
Terminal : Brass 0.8t, Tin plated
Screws : M3 Steel, Nickel Plated

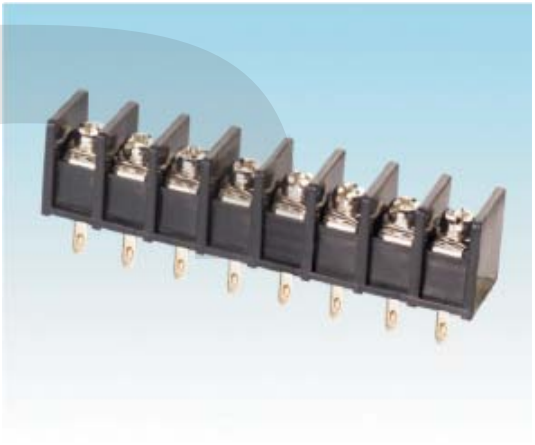

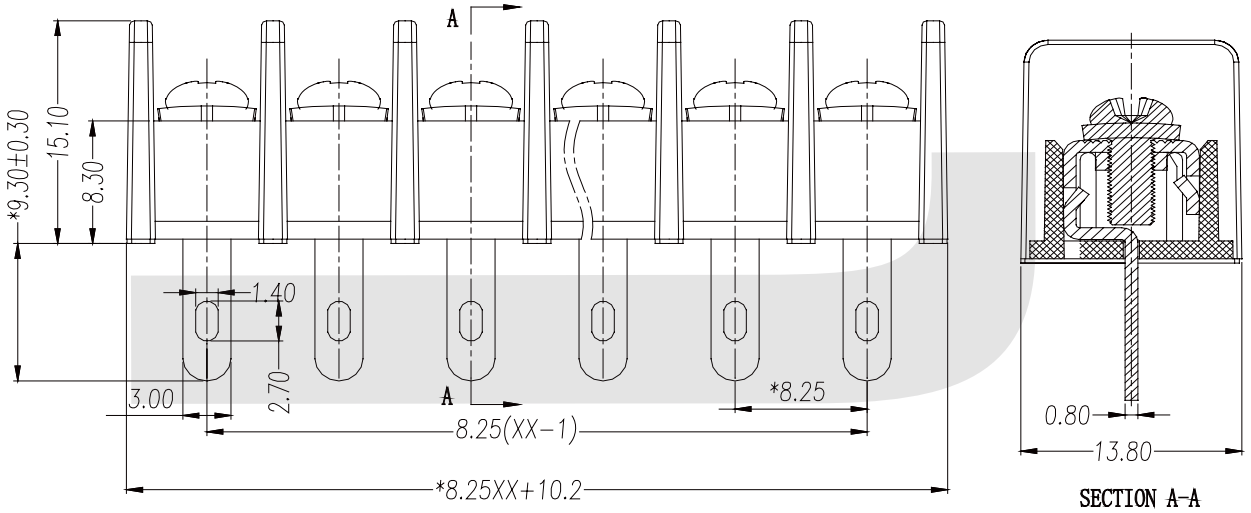

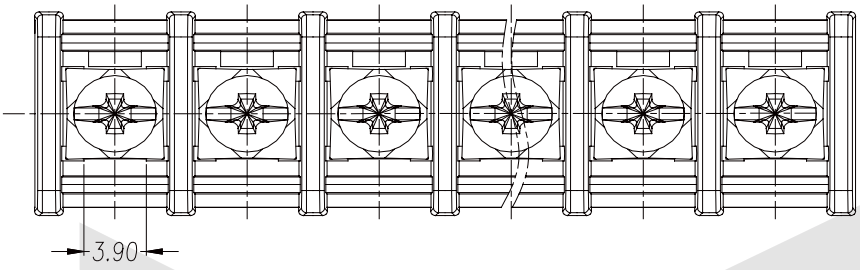

ORDER INFORMATION

Product NO.: KLS2-35C-8.25 XXP B

Pos. NO.
Series No.
Pitch 8.25=8.25mm
A=Mount Ends B=Barrier Ends
Pin Number

Barrier Series

KLS2-35C-8.25 Series

Electrical
Voltage rating : 300V
Current rating : 15A
Wire range : 14-22AWG
Operation temperature : -40°C to+105°C
Torque : 4kg/cm
Insulation Resistance：500MΩ/DC500V
Withstanding Voltage：AC2000V/Min



MATERIAL
Housing : PA 66 UL94V-0
Terminal : Brass 0.8t, Tin plated
Screws : M3 Steel, Nickel Plated

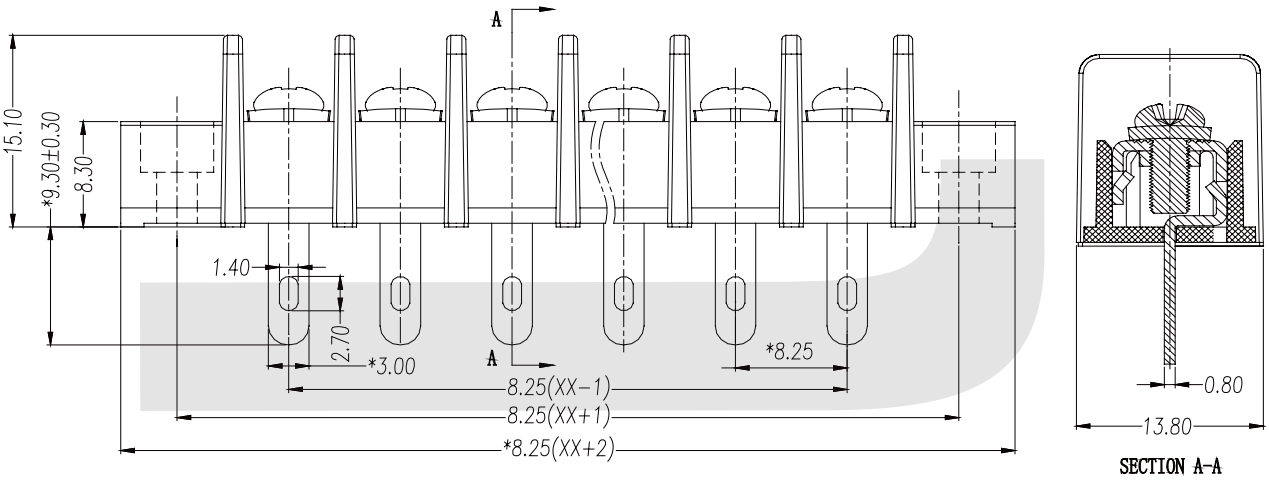

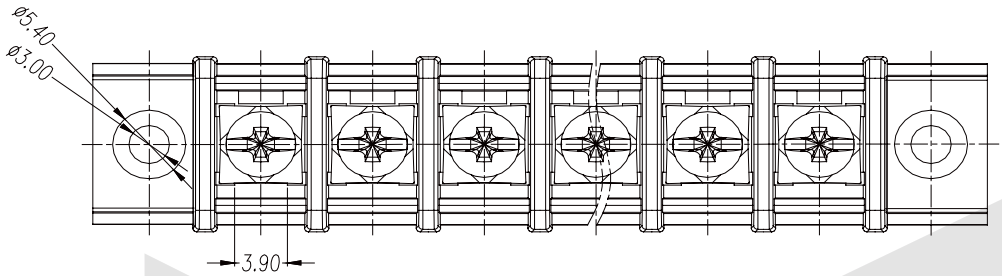

ORDER INFORMATION

Product NO.: KLS2-35C-8.25 XXP A

Pos. NO.
Series No.
Pitch 8.25=8.25mm
A=Mount Ends B=Barrier Ends
Pin Number

Barrier Series

KLS2-35R-8.25 Series

Electrical
Voltage rating : 300V
Current rating : 15A
Wire range : 14-22AWG
Operation temperature : -40°C to+105°C
Torque : 4kg/cm
Insulation Resistance：500MΩ/DC500V
Withstanding Voltage：AC2000V/Min

MATERIAL
Housing : PA 66 UL94V-0
Terminal : Brass 0.8t, Tin plated
Screws : M3 Steel, Nickel Plated

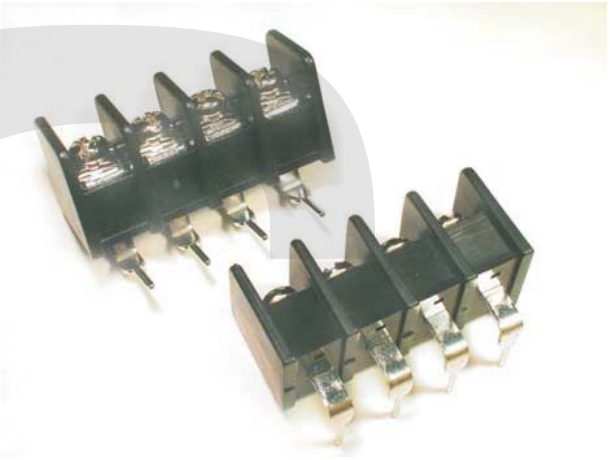

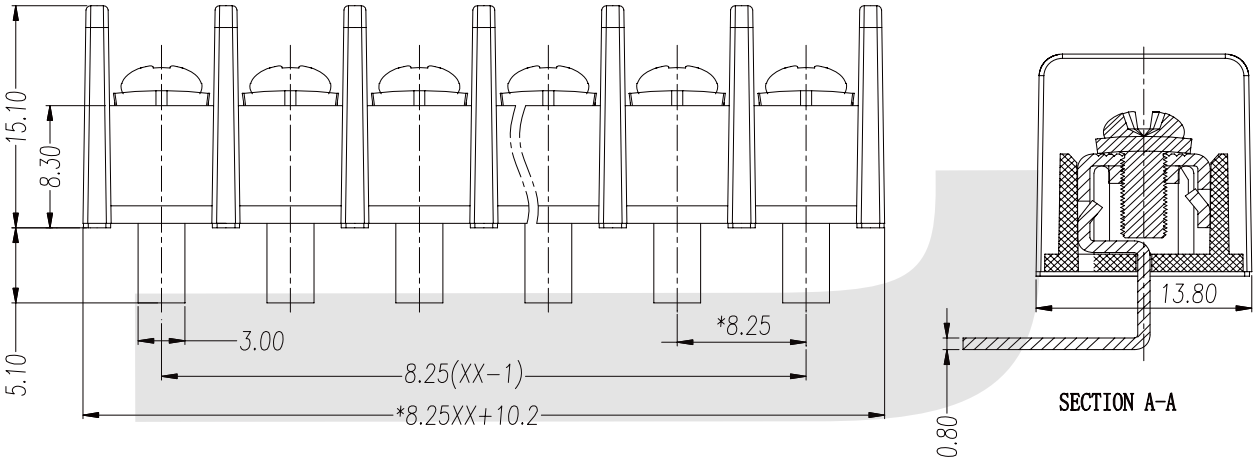

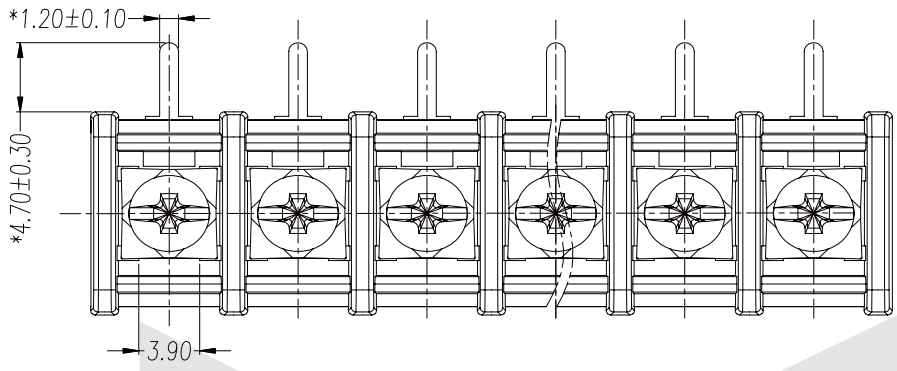

ORDER INFORMATION

Product NO.: KLS2-35R-8.25 XXP B

Pos. NO.
Series No.
Pitch 8.25=8.25mm
A=Mount Ends B=Barrier Ends
Pin Number

Barrier Series

KLS2-35R-8.25 Series

Electrical
Voltage rating : 300V
Current rating : 15A
Wire range : 14-22AWG
Operation temperature : -40°C to+105°C
Torque : 4kg/cm
Insulation Resistance：500MΩ/DC500V
Withstanding Voltage：AC2000V/Min

MATERIAL
Housing : PA 66 UL94V-0
Terminal : Brass 0.8t, Tin plated
Screws : M3 Steel, Nickel Plated

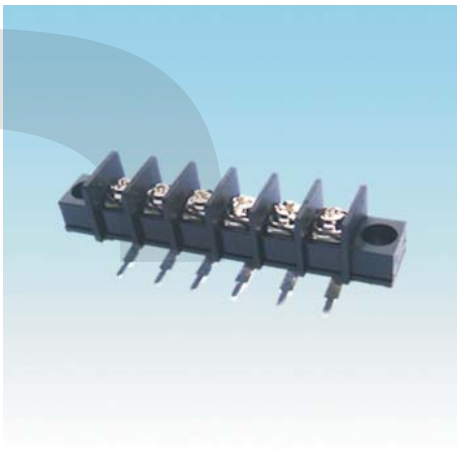

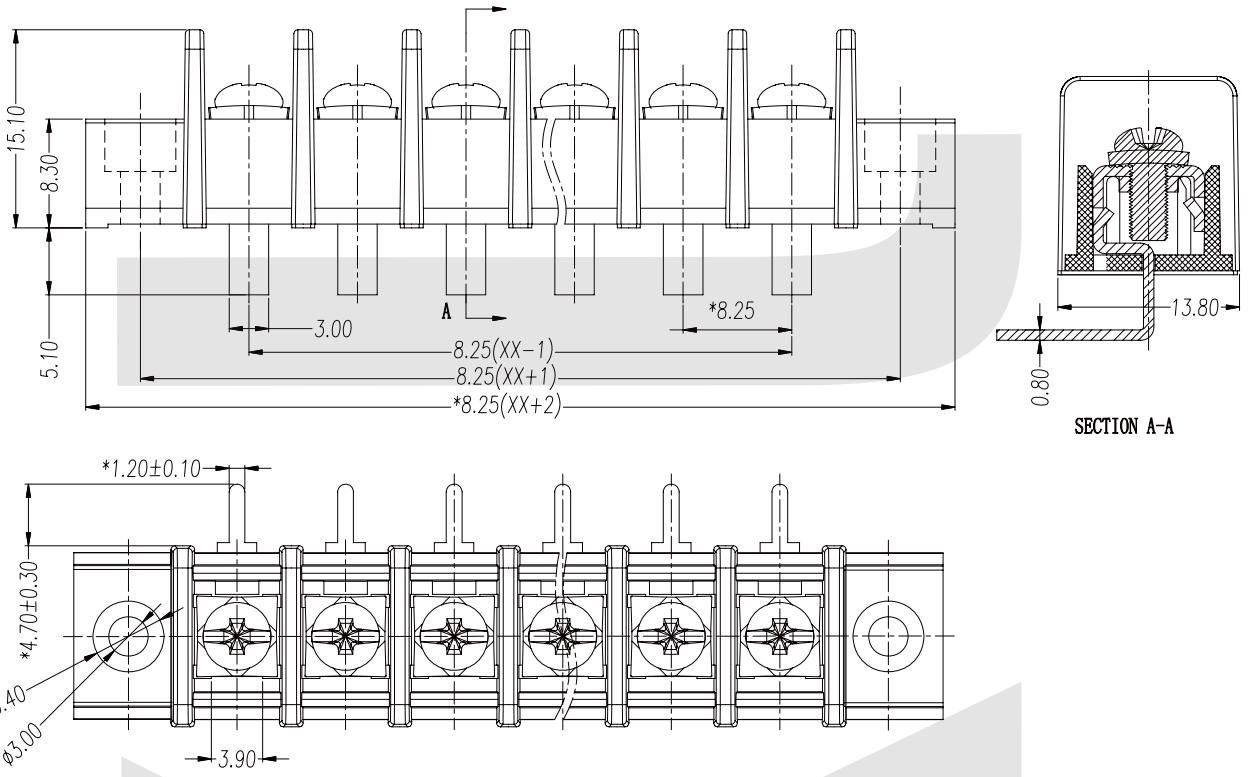

ORDER INFORMATION

Product NO.: KLS2-35R-8.25 XXP A

Pos. NO.
Series No.
Pitch 8.25=8.25mm
A=Mount Ends B=Barrier Ends
Pin Number

Barrier Series

KLS2-45A-9.50 Series

Electrical
Voltage rating : 300V
Current rating : 20A
Wire range : 12-22AWG
Operation temperature : -40°C to+105°C
Torque : 4kg/cm
Insulation Resistance：500MΩ/DC500V
Withstanding Voltage：AC2000V/Min

MATERIAL
Housing : PA 66 UL94V-0
Terminal : Brass 0.8t, Tin plated
Screws : M4 Steel, Nickel Plated

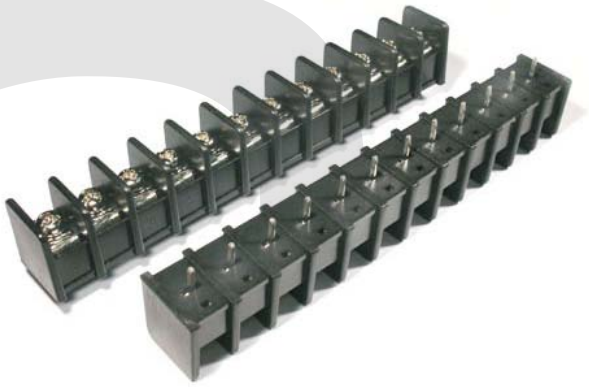

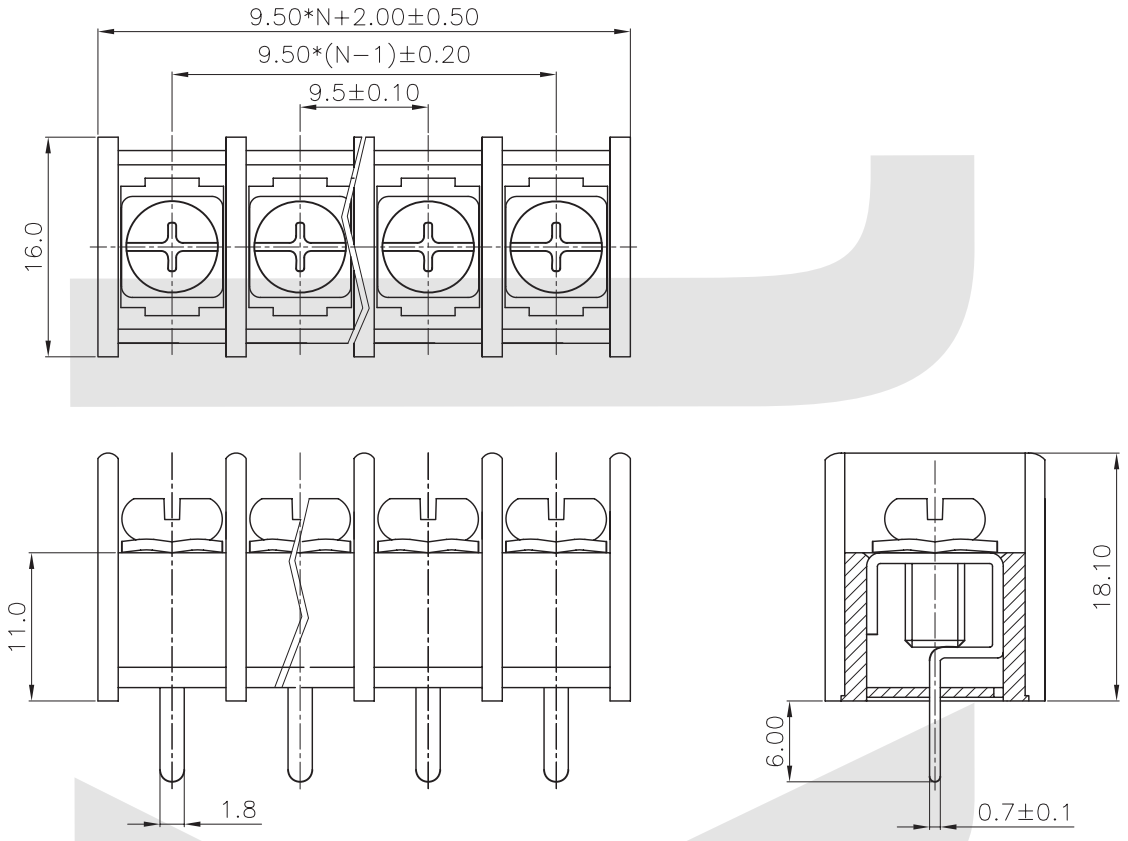

ORDER INFORMATION

Product NO.: KLS2-45A-9.50 XXP B

Pos. NO.
Series No.
Pitch 9.50=9.50mm
Pin Number
A=Mount Ends B=Barrier Ends

Barrier Series

KLS2-45A-9.50 Series

Electrical
Voltage rating : 300V
Current rating : 20A
Wire range : 12-22AWG
Operation temperature : -40°C to+105°C
Torque : 4kg/cm
Insulation Resistance：500MΩ/DC500V
Withstanding Voltage：AC2000V/Min



MATERIAL
Housing : PA 66 UL94V-0
Terminal : Brass 0.8t, Tin plated
Screws : M4 Steel, Nickel Plated

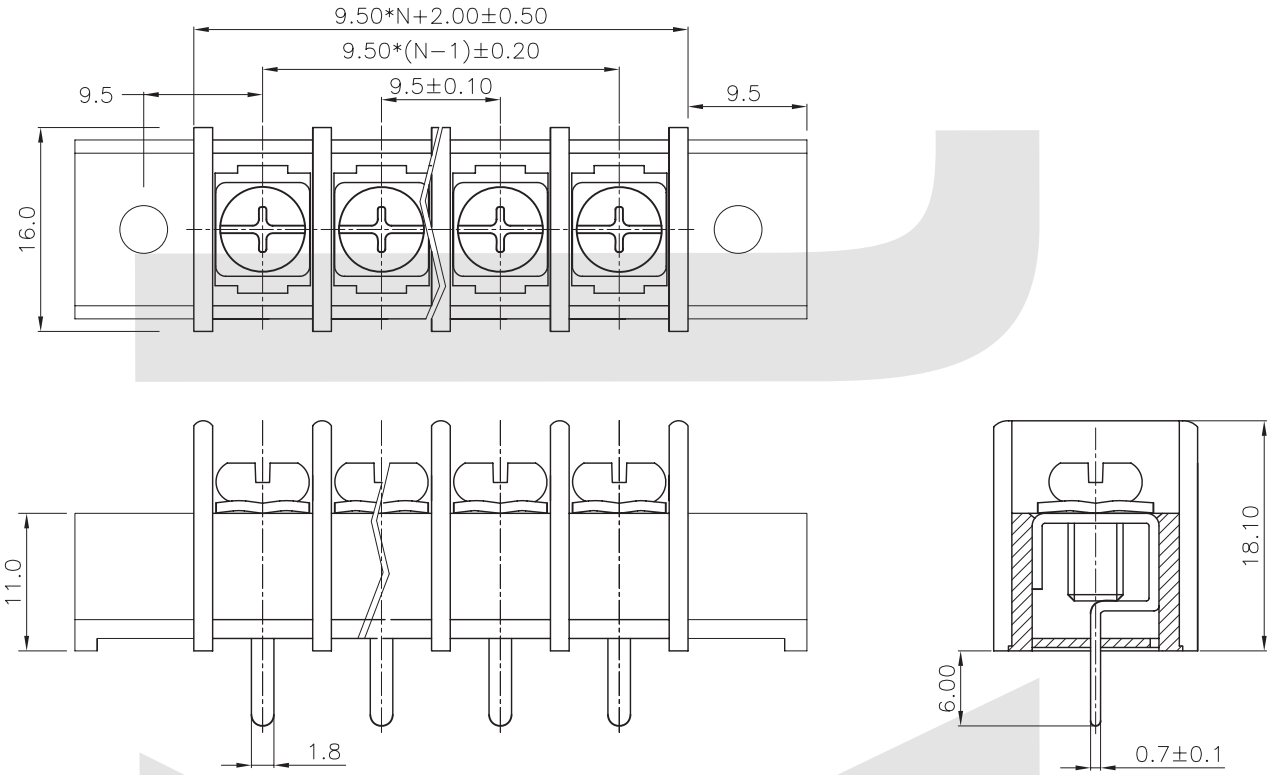

ORDER INFORMATION

Product NO.: KLS2-45A-9.50 XXP A

Pos. NO.
Series No.
Pitch 9.50=9.50mm
Pin Number
A=Mount Ends B=Barrier Ends

Barrier Series

KLS2-45B-9.50 Series

Electrical
Voltage rating : 300V
Current rating : 20A
Wire range : 12-22AWG
Operation temperature : -40°C to+105°C
Torque : 4kg/cm
Insulation Resistance：500MΩ/DC500V
Withstanding Voltage：AC2000V/Min



MATERIAL
Housing : PA 66 UL94V-0
Terminal : Brass 0.8t, Tin plated
Screws : M4 Steel, Nickel Plated

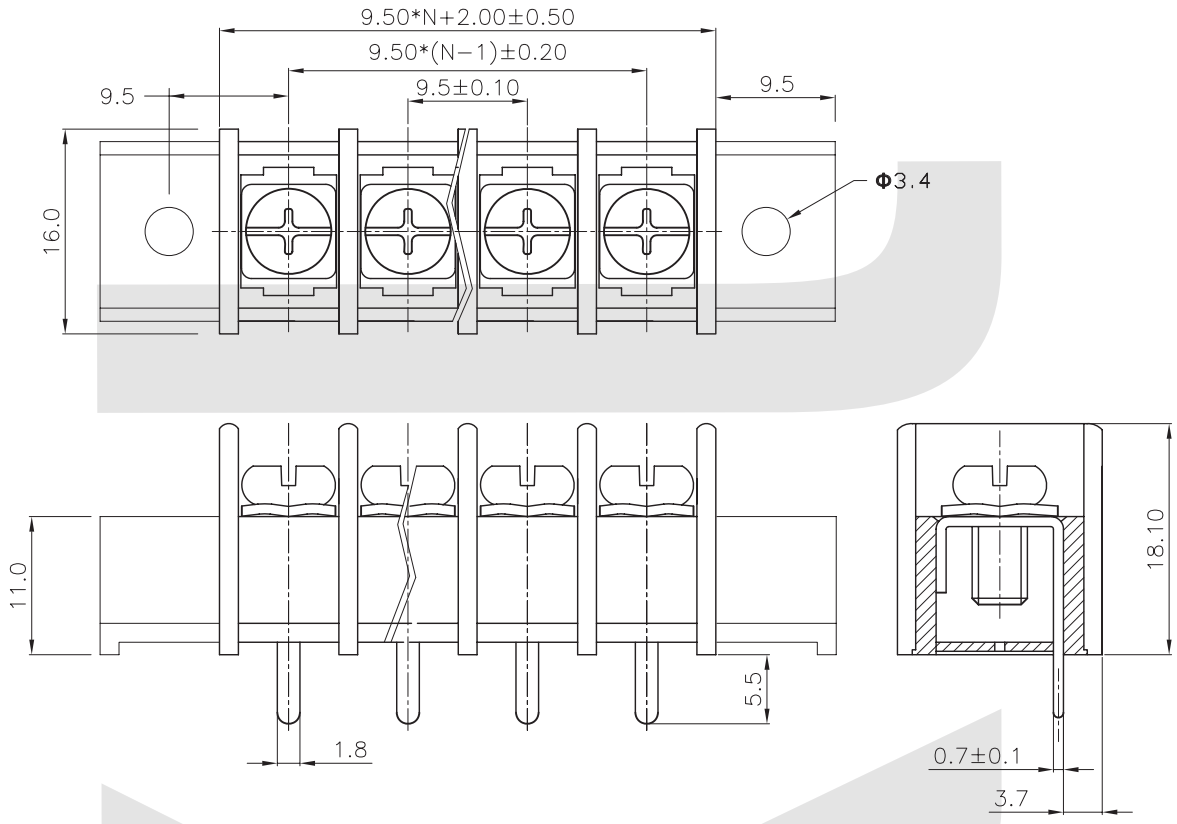

ORDER INFORMATION

Product NO.: KLS2-45B-9.50 XXP A

Pos. NO.
Series No.
Pitch 9.50=9.50mm
Pin Number
A=Mount Ends B=Barrier Ends

Barrier Series

KLS2-45B-9.50 Series

Electrical
Voltage rating : 300V
Current rating : 20A
Wire range : 12-22AWG
Operation temperature : -40°C to+105°C
Torque : 4kg/cm
Insulation Resistance：500MΩ/DC500V
Withstanding Voltage：AC2000V/Min

MATERIAL
Housing : PA 66 UL94V-0
Terminal : Brass 0.8t, Tin plated
Screws : M4 Steel, Nickel Plated

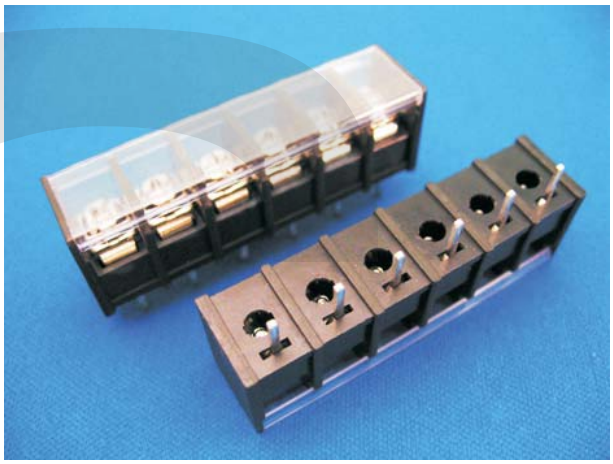

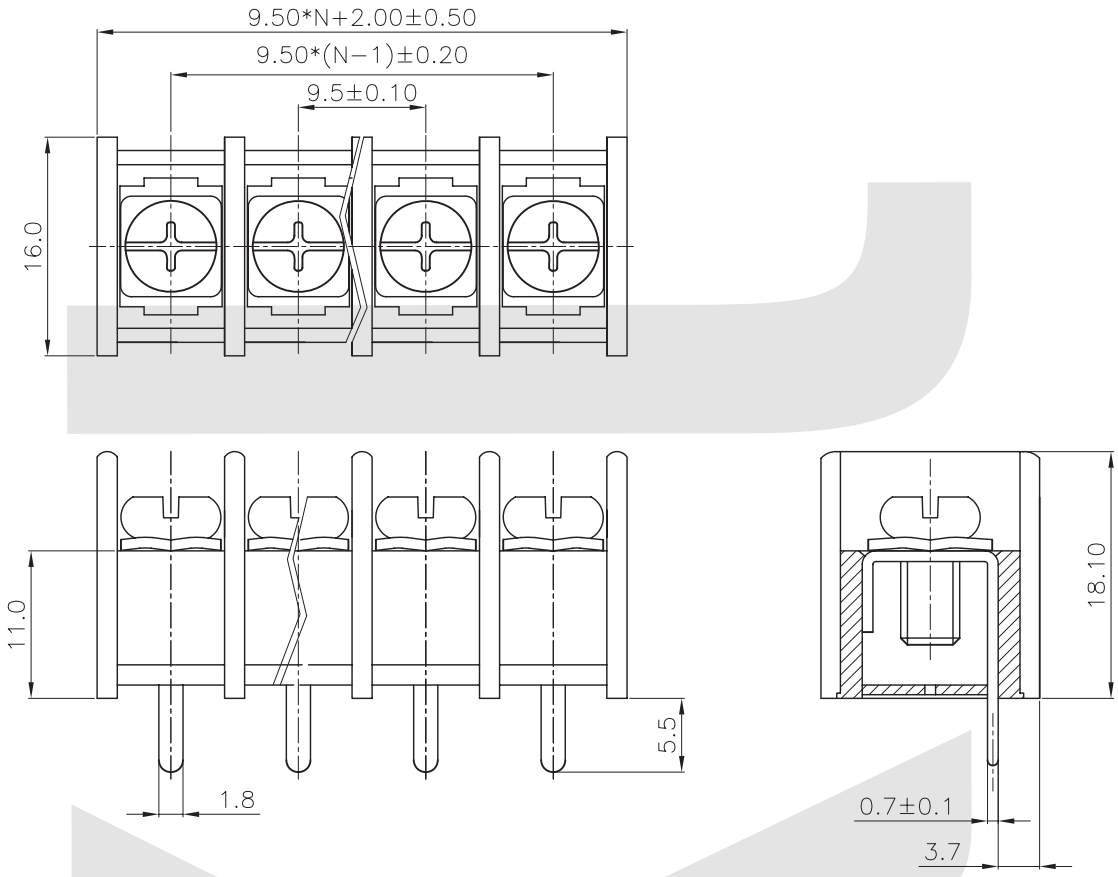

ORDER INFORMATION

Product NO.: KLS2-45B-9.50 XXP B

Pos. NO.
Series No.
Pitch 9.50=9.50mm
Pin Number
A=Mount Ends B=Barrier Ends

Barrier Series

KLS2-45C-9.50 Series

Electrical
Voltage rating : 300V
Current rating : 20A
Wire range : 12-22AWG
Operation temperature : -40ºC to+105ºC
Torque : 4kg/cm
Insulation Resistance：500MΩ/DC500V
Withstanding Voltage：AC2000V/Min

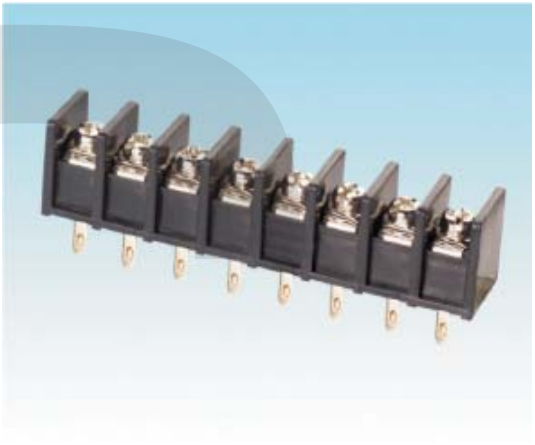

MATERIAL
Housing : PA 66 UL94V-0
Terminal : Brass 0.8t, Tin plated
Screws : M4 Steel, Nickel Plated

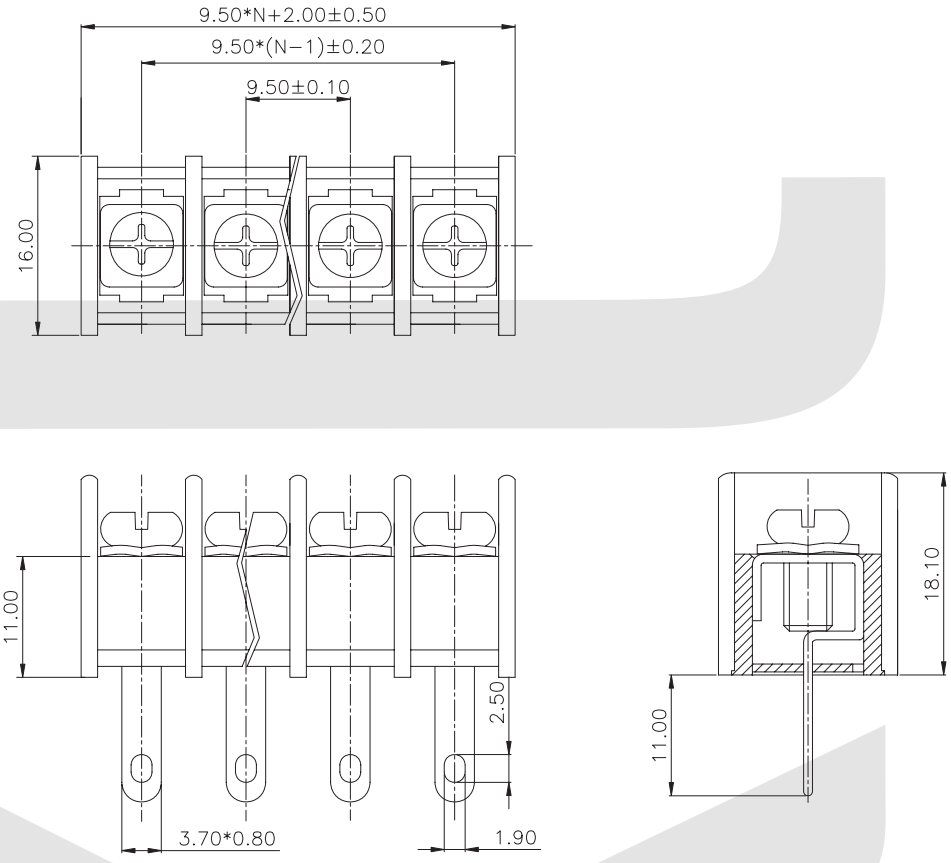

ORDER INFORMATION

Product NO.: KLS2-45C-9.50 XXP B

Pos. NO.
Series No.
Pitch 9.50=9.50mm
Pin Number
A=Mount Ends B=Barrier Ends

Barrier Series

KLS2-45C-9.50 Series

Electrical
Voltage rating : 300V
Current rating : 20A
Wire range : 12-22AWG
Operation temperature : -40°C to+105°C
Torque : 4kg/cm
Insulation Resistance：500MΩ/DC500V
Withstanding Voltage：AC2000V/Min



MATERIAL
Housing : PA 66 UL94V-0
Terminal : Brass 0.8t, Tin plated
Screws : M4 Steel, Nickel Plated

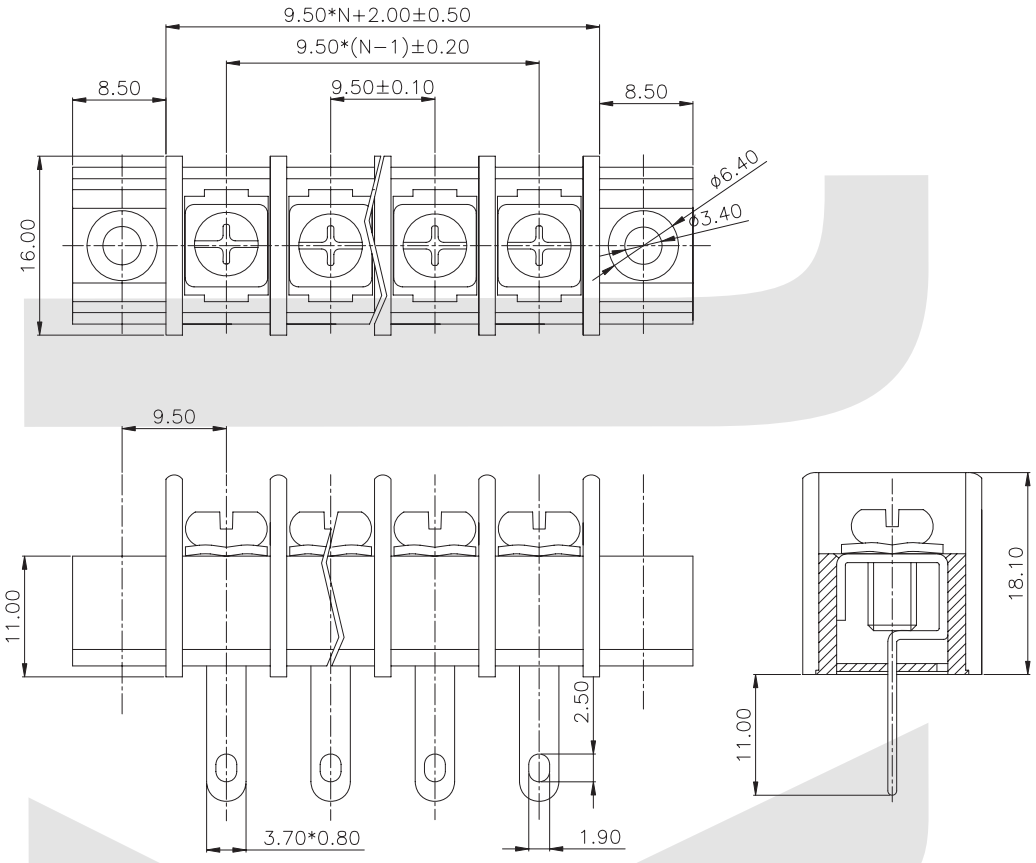

ORDER INFORMATION

Product NO.: KLS2-45C-9.50 XXP A

Pos. NO.
Series No.
Pitch 9.50=9.50mm
A=Mount Ends B=Barrier Ends
Pin Number

Barrier Series

KLS2-45R-9.50 Series

Electrical
Voltage rating : 300V
Current rating : 20A
Wire range : 12-22AWG
Operation temperature : -40ºC to+105ºC
Torque : 4kg/cm
Insulation Resistance：500MΩ/DC500V
Withstanding Voltage：AC2000V/Min

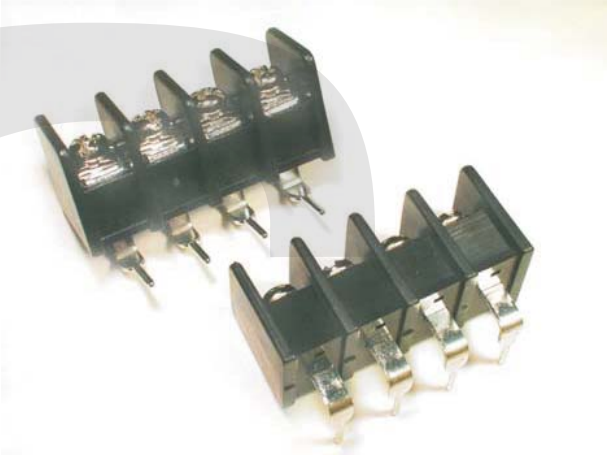

MATERIAL
Housing : PA 66 UL94V-0
Terminal : Brass 0.8t, Tin plated
Screws : M4 Steel, Nickel Plated

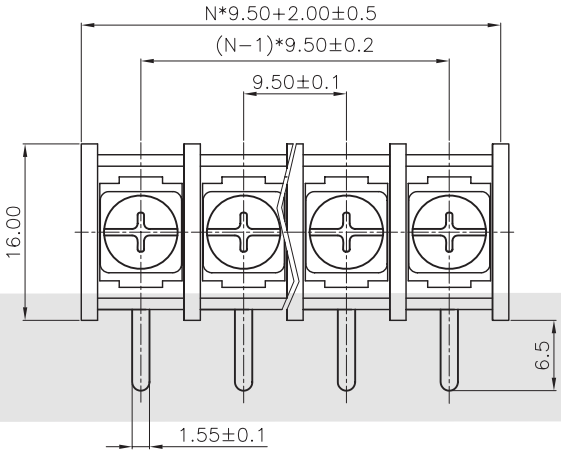

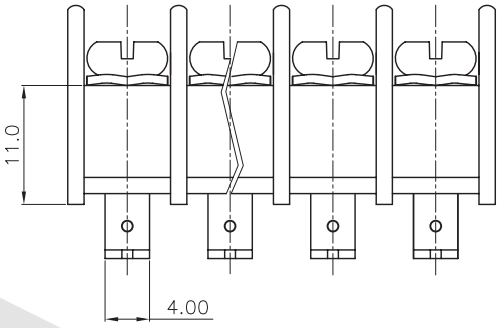

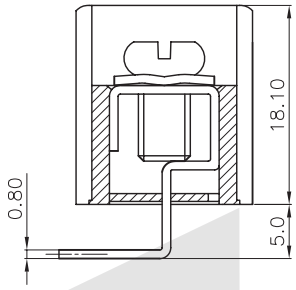

ORDER INFORMATION

Product NO.: KLS2-45R-9.50 XXP B

Pos. NO.
Series No.
Pitch 9.50=9.50mm
Pin Number
A=Mount Ends B=Barrier Ends

Barrier Series

KLS2-45R-9.50 Series

Electrical
Voltage rating : 300V
Current rating : 20A
Wire range : 12-22AWG
Operation temperature : -40°C to+105°C
Torque : 4kg/cm
Insulation Resistance：500MΩ/DC500V
Withstanding Voltage：AC2000V/Min

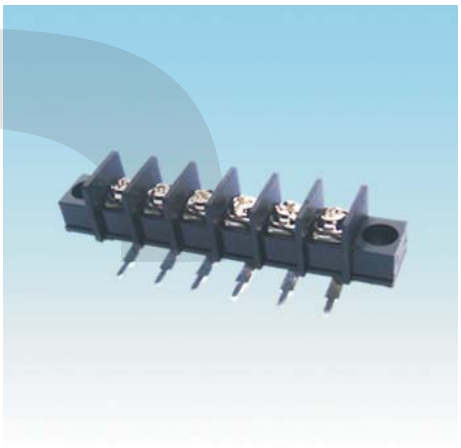

MATERIAL
Housing : PA 66 UL94V-0
Terminal : Brass 0.8t, Tin plated
Screws : M4 Steel, Nickel Plated

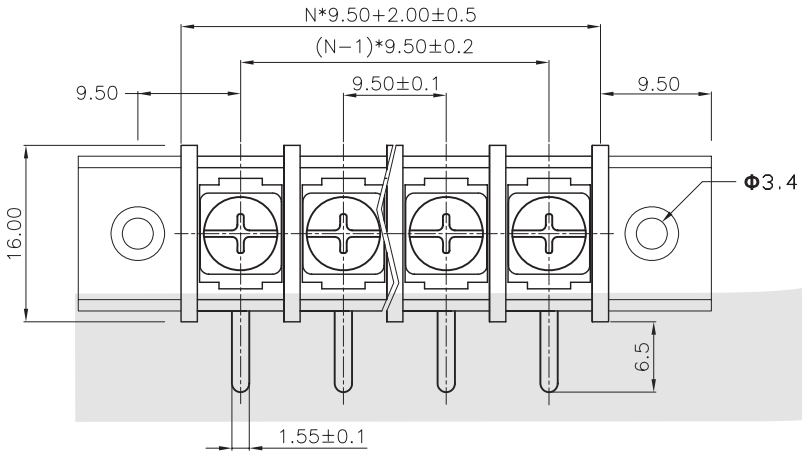

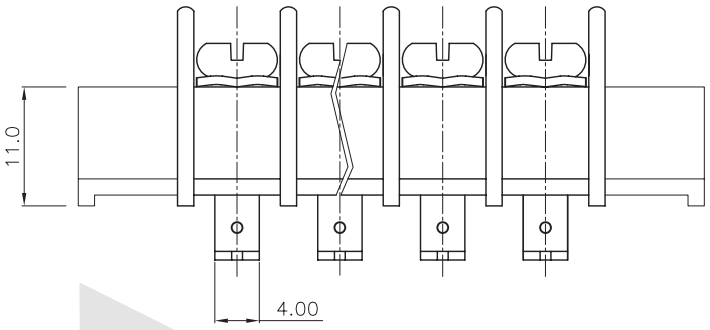

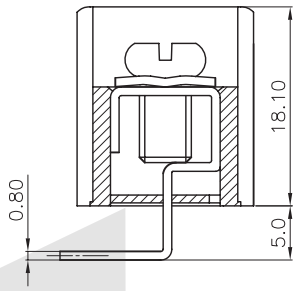

ORDER INFORMATION

Product NO.: KLS2-45R-9.50 XXP A

Pos. NO.
Series No.
Pitch 9.50=9.50mm
A=Mount Ends B=Barrier Ends
Pin Number

Fuse Series

KLS2-510EW Series

Electrical :

Rated voltage: 250V
Rated current: 10A
Contact resistance: 20mΩ
Insulation resistance: 5000MΩ/1000V
Withstanding Voltage: AC2500V/1Min
Wire range: 18-12AWG 2.5mm²



Material

Screws: M3 steel Zinc plated
Contact: Brass
Pin header: Brass, Ni plated
Housing: PA66, UL94V-0

Mechanical

Temp. Range: -40°C~+105°C
MAX Soldering: +250°C for 5 Sec.
Torque: 0.5Nm (4.5lb.in)
Strip length: 7-8mm

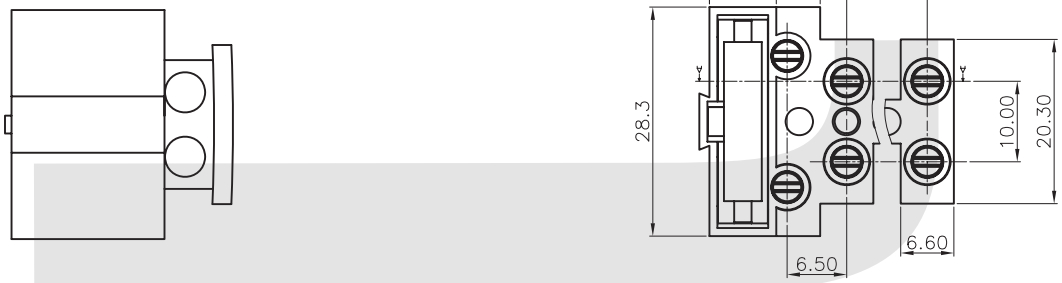

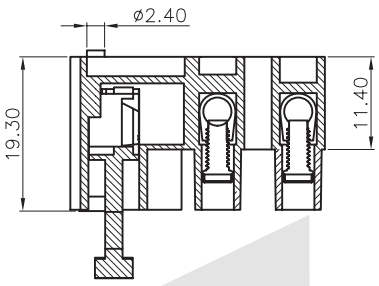

SECTION A–A

ORDER INFORMATION

Product NO.: KLS2-510 E W-3P

- Pos. NO.
- Series No.
- E=With earth screw hole
- W=With wire protection
- 3P=Pins or 1P 2P 3P 4P 5P

DC Power Jack Connectors Series

KLS2-DC-01 Series

Details:
DC Jack with Terminal Block, 2.1*5.5mm
DC 12V-36V Power Connector
DC Power Connector Converter Adapter Male Jack Plug
Dimension: 39mm*13mm*12mm
Dia plug: 5.5*2.1mm

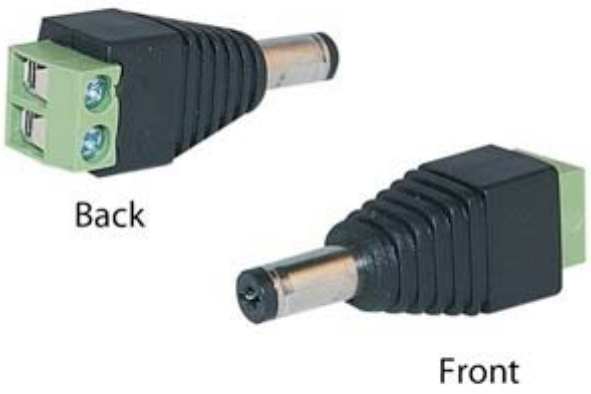

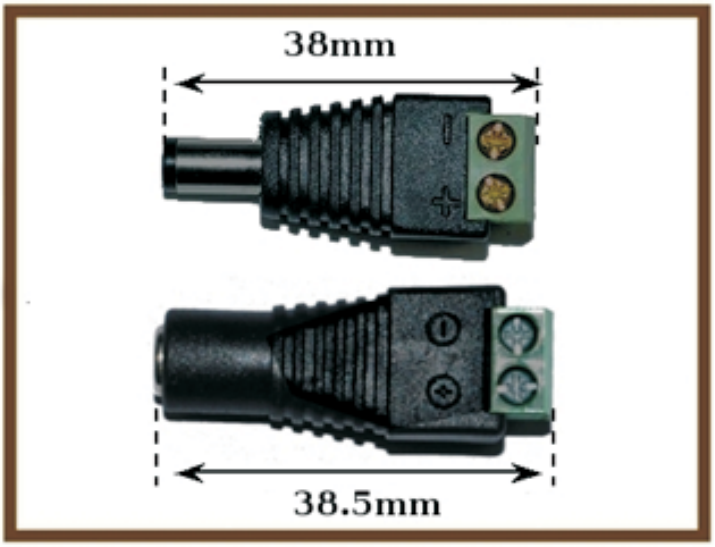



DC Power Jack Connectors Series

KLS2-DC-02

Details:

- **2.1 x 5.5mm CCTV Camera DC Power Plug Connector.**
- **DC Power Plug with plastic construction and strain relief.**
- **This 2.1 x 5.5mm Power Plug features one power connector end DC plug male to another end terminal for CCTV camera connected.**
- **It is a perfect solution for those who want to make custom power cable.**
- **This CCTV Camera DC Power Connector will provide a great connection.**
- **Internal diameter of the plug: 2.1mm**
- **External diameter of the plug: 5.5mm**



DC Power Jack Connectors Series

KLS2-DC-03



DC Power Jack Connectors Series

KLS2-DC-04

Details:
Cat5 to BNC Male Coax Connector for CCTV Camera

Features:
* Great for short distance connection
* Simply & Professional appearance for cabling
* Easier for CCTV camera installation, save time and money
* Easy to use, No electrical tap, No splicing, no crimping, only a small screw driver

Specifications:
* Connectors: Terminal block, Male BNC
* Material: Zinc Alloy + Plastic
* Size: 4.4*1.6*1.6CM
* Weight: 13.2g



Din Rail Terminal Blocks*Fuse Terminal Blocks Series

KLS2-DR-DK

II

Specification

Connector	wire section $(mm)^2$		Rated Current	Rated voltage	Dimensions
DK2.5	0.2-2.5	IEC60947-7-1	24A	800V	5×60×47
DK4	0.2-4	IEC60947-7-1	32A	800V	6×60×47
DK6	0.2-6	IEC60947-7-1	41A	800V	8×60×47
DK10	0.2-10	IEC60947-7-1	57A	800V	10×60×47
DK16	0.5-16	IEC60947-7-1	76A	800V	12×60×63
DK35	0.2-35	IEC60947-7-1	125A	800V	16×60×63
DK70	0.75-70	IEC60947-7-1	192A	800V	20×75×86
KDK2.5	0.2-2.5	IEC60947-7-1	16A	800V	5×60×49
BDK2.5	0.2-2.5	IEC60947-7-1	24A	800V	6×69×63
WDK2.5E	0.2-2.5	IEC60947-7-1	24A	800V	5×69×63

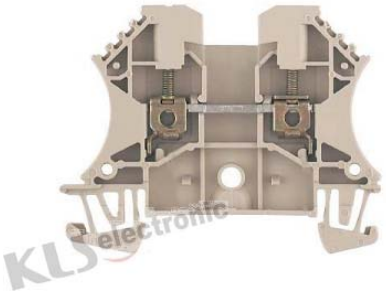

Connector	Hard wire$(mm)^2$		Rated Current	Dimensions
GK2.5	0.2-2.5	IEC60947-7-1	800V/24A	5×60×47
FDK4	70	IEC60947-7-1	500V/6.3A	8×60×60

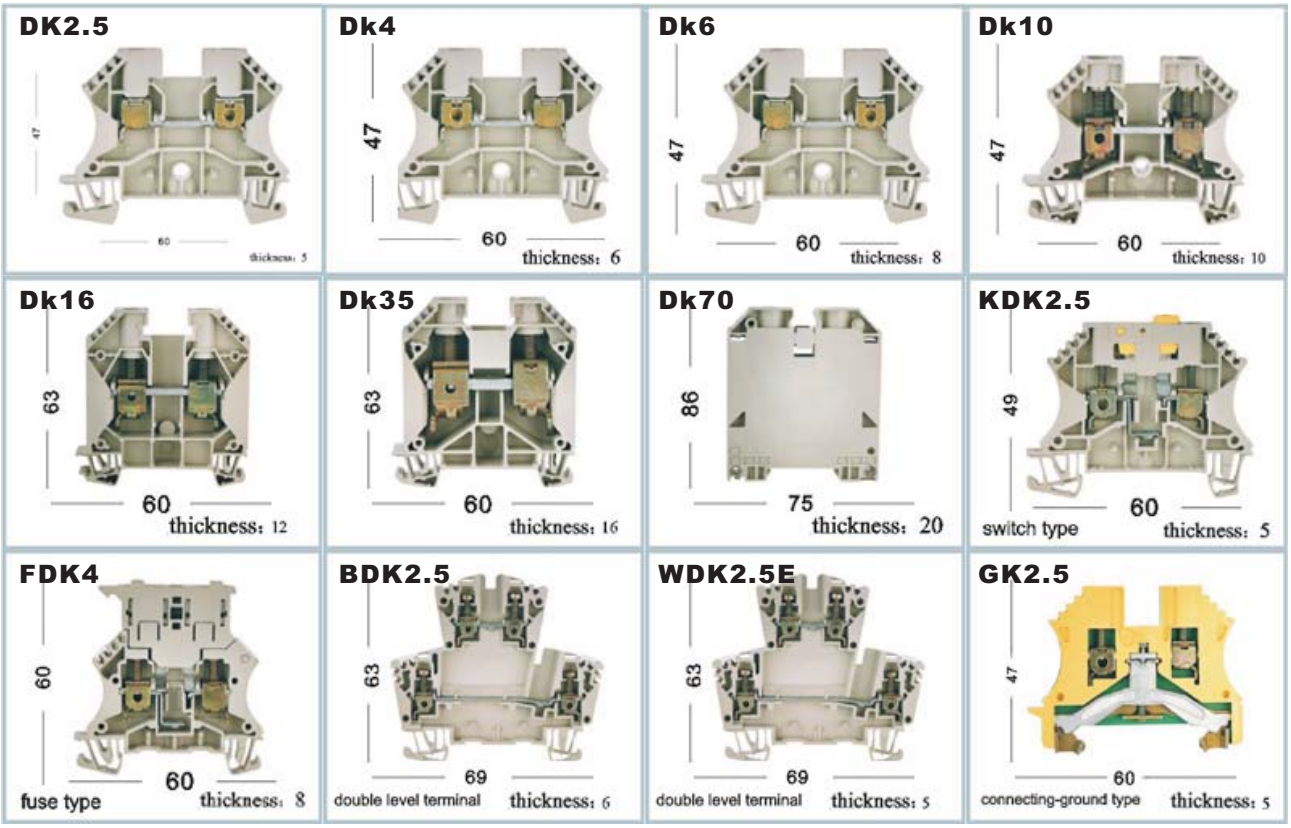

Din Rail Terminal Blocks*Fuse Terminal Blocks Series

KLS2-DR-JXB / KLS2-DR-JB

JXB Terminal Block

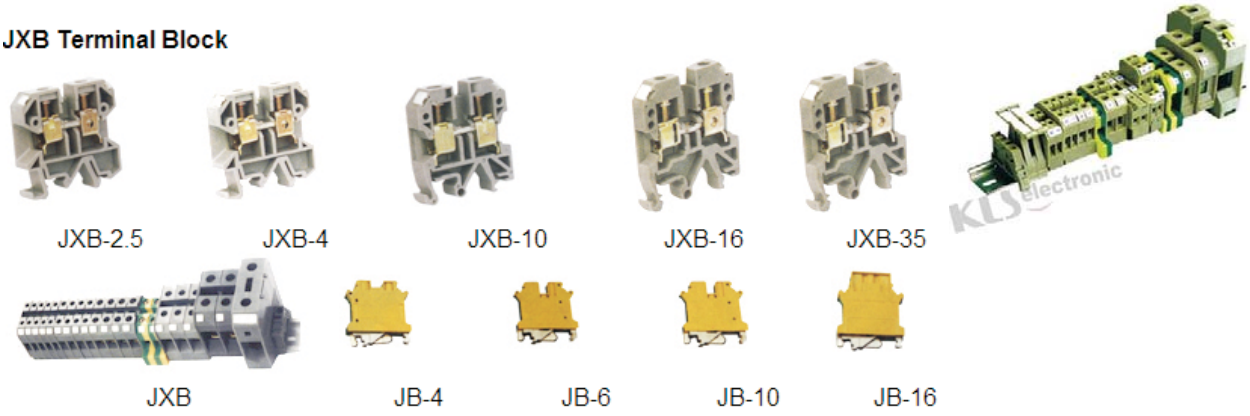

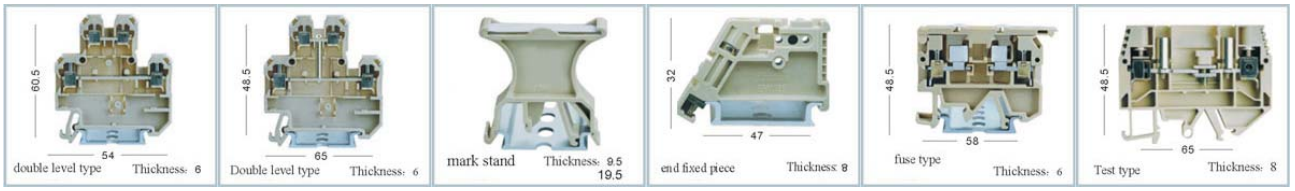

JXB-4S1 **JXB-4SZ1** **JXB-B** **JXB-GD35** **JXB-RD** **JXB-WI61S**

Specification

Connector		wire section $(mm)^2$	Rated Current	Rated voltage	Dimensions
JXB-2.5	IEC60947-7-1	0.2-2.5	24A	800V	6×41×46.5
JXB-4	IEC60947-7-1	0.2-4	32A	800V	6.5×42×52
JXB-6	IEC60947-7-1	0.2-6	41A	800V	8×42×52
JXB-10	IEC60947-7-1	0.2-10	57A	800V	10×42×52
JXB-16	IEC60947-7-1	0.5-16	76A	800V	12×42×52
JXB-35	IEC60947-7-1	10-35	125A	800V	18×50×57.5
JXB-70	IEC60947-7-1	25-70	192A	800V	22×75×87
JB-2.5	IEC60947-7-1	0.2-2.5	0	0	6×56×40
JB-4	IEC60947-7-1	0.2-4	0	0	7×56×44
JB-6	IEC60947-7-1	0.2-6	0	0	8×56×44

Connector	0	wire section $(mm)^2$	0	Dimensions
JB-10	IEC60947-7-1	0.5-10	0	10×56×44
JB-16	IEC60947-7-1	0.5-16	0	12×56×50
JB-35	IEC60947-7-1	10-35	0	16×58.5×56.4
JXB-4S1	IEC60947-7-1	0.2-4	500V/32A	6×54×60.5
JXB-4SZ1	IEC60947-7-1	0.2-4	500V/32A	6×65×48.5
JXB-B	IEC60947-7-1	0	0	0
JXB-GD35	IEC60947-7-1	0	0	8×47×32
JXB-RD	IEC60947-7-1	0.2-4	0	6×58×48.5
JXB-WI61S	IEC60947-7-1	0.2-4	400V/41A	8×65×48.5

Din Rail Terminal Blocks*Fuse Terminal Blocks Series

KLS2-DR-UK / KLS2-UR-USLKG



UK Series General Model Terminal Block

Specification

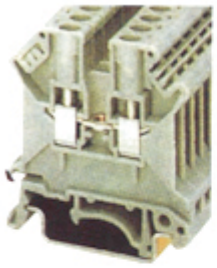

UK3N

Connector	Hard wire $(mm)^2$	Soft wire $(mm)^2$	Rated Current	Rated voltage	Dimensions
UK2.5B	0.2-4	0.2-2.5	32A	690V	6.2×42.5×42
UK3N	0.2-4	0.2-2.5	32A	800V	5.2×42.5×47
UK5N	0.2-6	0.2-4	41A	800V	6.2×42.5×47
UK6N	0.2-10	0.2-2.5	57A	800V	8.2×42.5×47
UK10N	0.5-16	0.5-10	76A	800V	10.2×42.5×47
UK16N	0.2-25	4-16	101A	800V	12.2×42.5×52
UK35N	0.75-50	0.75	125A	1000V	15.2×50.0×62
UKH50	16-50	25-50	150A	1000V	62×70.5×83.5
UKH95	25-95	35-95	232A	1000V	25×83×97.5
UKH150	35-150	50-150	309A	1000V	31×100×118.5

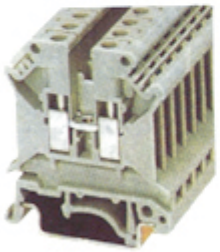

UK5N

Connector	Hard wire $(mm)^2$	Soft wire(mm) 2	Rated Current	Dimensions
USLKG2.5	0.2-4	0.2-2.5	32A	6.2×42.5×42
USLKG3	0.2-4	0.2-2.5	32A	5.2×42.5×47
USLKG5	0.2-6	02.-4	41A	6.2×42.5×47
USLKG6N	0.2-10	0.2-6	57A	8.2×42.5×47
USLKG10N	0.5-16	0.5-10	76A	10.2×42.5×47
USLKG16N	2.5-25	4-16	101A	12.2×42.5×54
USLKG35N	0.75-50	0.75-35	150A	15.2×50.0×62
USLKG50	16-50	25-50	150A	20×70.5×81.5



UK6N

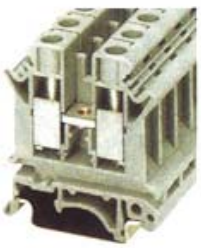

UK10N



USLKG3



USLKG5



USLKG10N



USLKG16N

Din Rail Terminal Blocks*Fuse Terminal Blocks Series

KLS2-DR-UK / KLS2-UR-USLKG

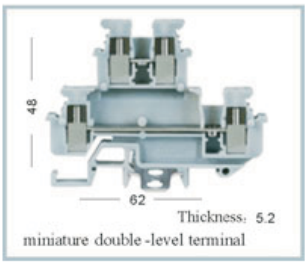

MBKKB 2.5

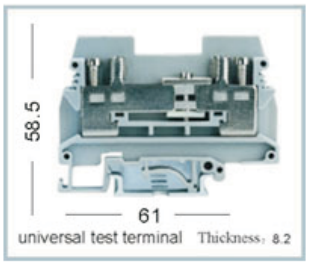

URTK/S

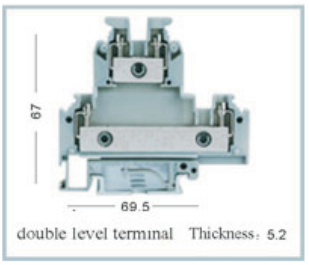

UKKB3

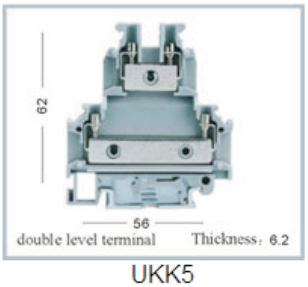

UKK5

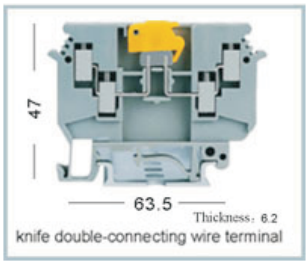

UKD4-P/P

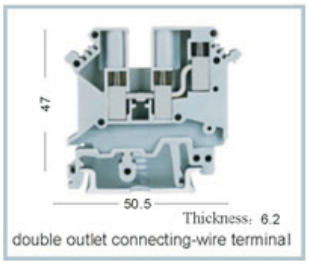

UK5-TWIN

Specification

Connector	Hard wire $(mm)^2$	wire section $(mm)^2$	Rated Current	Rated voltage	Dimensions
MBKKB 2.5	0.2-4	0.2-2.5	24A	500V	5.2×62×48
URTK/S	0.5-10	0.5-6	57A	500V	8.2×61×58.5
UKKB3	0.25-2.5	0.25-1.5	32A	500V	5.2×69.5×67
UKK5	0.2-4	0.2-4	32A	500V	6.2×56×62
UKD4-P/P	0.2-4	0.2-2.5	16A	690V	6.2×63.5×47
UK5-TWIN	0.2-4	0.2-4	32A	500V	6.2×50.5×47
UK5-RETURN	0.2-6	0.2-4	41A	500V	6.2×47.3×58.5
UDK4	0.2-4	0.2-2.5	32A	690V	6.2×63.5×47
MTK-P/P	0.2-4	0.2-2.5	16A	400V	5.2×46×51.5
MBK3/E-Z	0.2-4	0.2-2.5	32A	500V	5.2×28×31.

Connector	Hard wire $(mm)^2$	wire section $(mm)^2$	Rated voltage / Current	Dimensions
MBK 5/E-Z	0.2-6	0.2-4	500V/41A	5.2×28×31.5
UK5-HESI	0.2-4	0.2-4	800V/6.3A	8.2×72.5×56.5
UK10-DREHSI	0.5-16	0.5-16	800V/10A	12×62×59

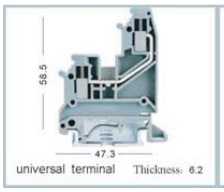

UK5-RETURN

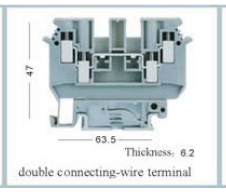

UDK4

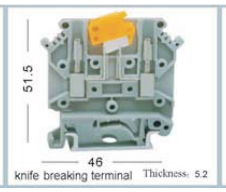

MTK-P/P

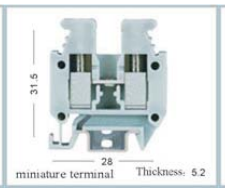

MBK3/E-Z

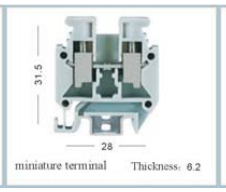

MBK 5/E-Z

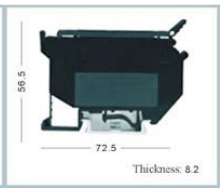

UK5-HESI

Multi Purpose Pluggable Terminal Blocks Series

KLS2-MPK-3.50/3.81 Series Pitch=3.50/3.81

Capability	
Rated voltage/Rated current	300V/10A
Wire range	28-14AWG 1.5mm^2
Withstand Voltage	AC2000V/1Min
Insulation resistance	5000MΩ/1000V
Contact resistance	20mΩ
Temp.Range	-40°C~+105°C
MAX Soldering	+250°C for 5Sec
Strip length	7-8mm
Material	
Housing	PA66,UL94V-0
Contact	Phosphor Bronze



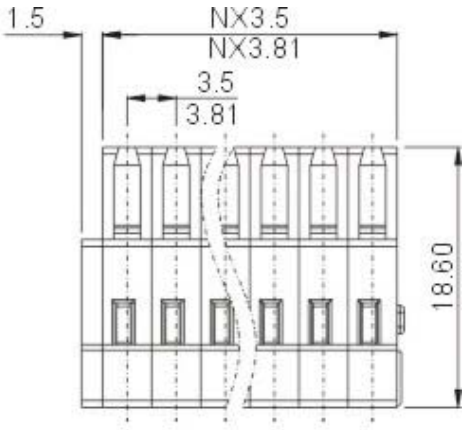

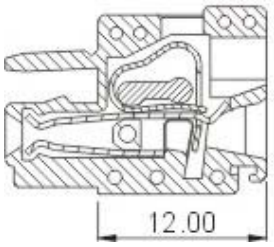

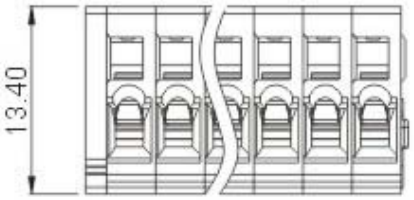

ORDER INFORMATION

HOW TO ORDER:

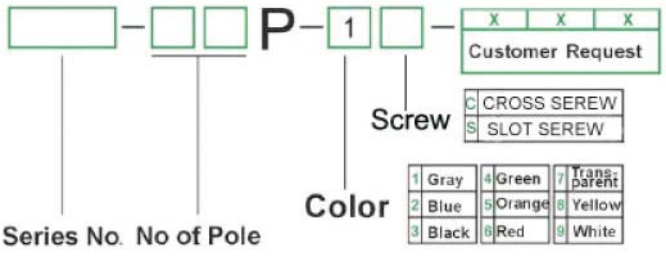

Multi Purpose Pluggable Terminal Blocks Series

KLS2-MPK-5.00/7.50 Series Pitch=5.0/7.5

Capability	
Rated voltage/Rated current	300V/15A
Wire range	28-12AWG 2.5mm^2
Withstand Voltage	AC2000V/1Min
Insulation resistance	5000MΩ/1000V
Contact resistance	20mΩ
Temp.Range	-40°C~+105°C
MAX Soldering	+250°C for 5Sec
Strip length	8-9mm
Material	
Housing	PA66,UL94V-0
Contact	Phosphor Bronze



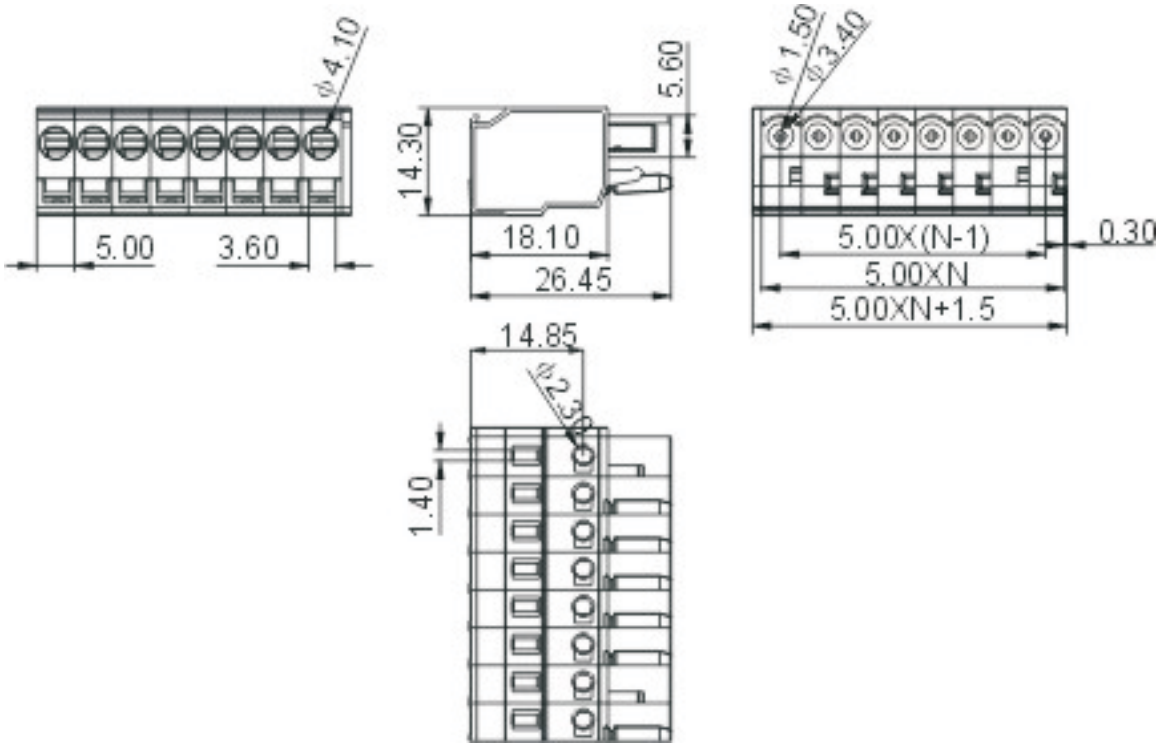

ORDER INFORMATION

HOW TO ORDER:

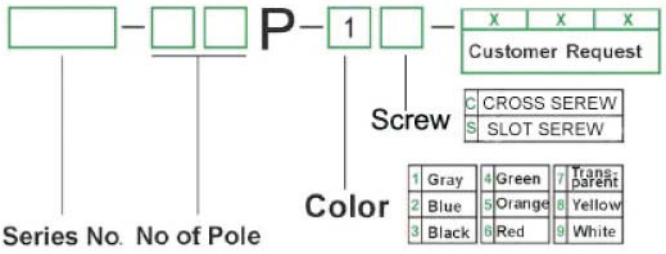

Multi Purpose Pluggable Terminal Blocks Series

KLS2-MPKG-3.50/3.81 Series Pitch=3.50/3.81

Capability	
Rated voltage/Rated current	300V/10A
Wire range	28-14AWG 1.5mm^2
Withstand Voltage	AC2000V/1Min
Insulation resistance	5000MΩ/1000V
Contact resistance	20mΩ
Temp.Range	-40°C~+105°C
MAX Soldering	+250°C for 5Sec
Strip length	7-8mm
Material	
Housing	PA66,UL94V-0
Contact	Phosphor Bronze



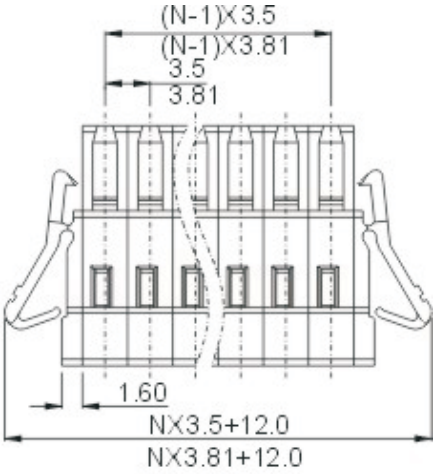

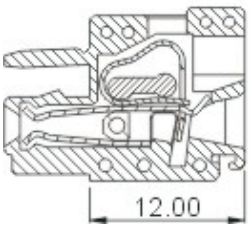

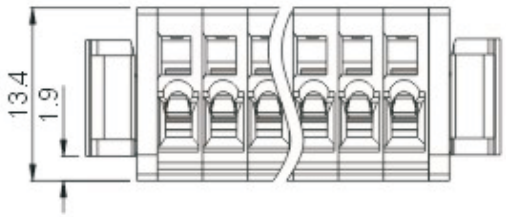

ORDER INFORMATION

HOW TO ORDER:

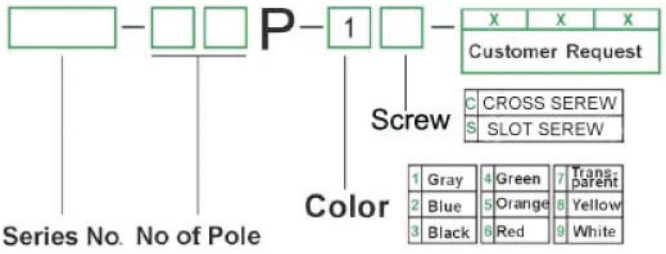

Multi Purpose Pluggable Terminal Blocks Series

KLS2-MPKG-5.00/7.50 Series Pitch=5.00/7.50

Capability	
Rated voltage/Rated current	300V/15A
Wire range	28-12AWG 2.5mm^2
Withstand Voltage	AC2000V/1Min
Insulation resistance	5000MΩ/1000V
Contact resistance	20mΩ
Temp.Range	-40°C~+105°C
MAX Soldering	+250°C for 5Sec
Strip length	8-9mm
Material	
Housing	PA66,UL94V-0
Contact	Phosphor Bronze



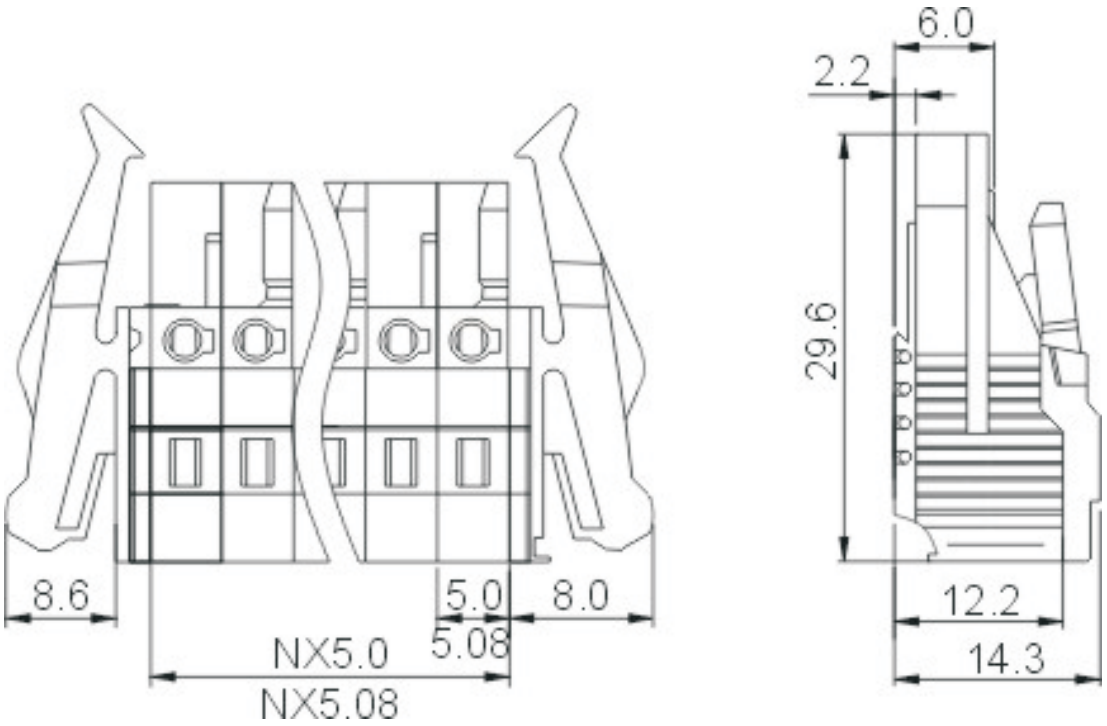

ORDER INFORMATION

HOW TO ORDER:

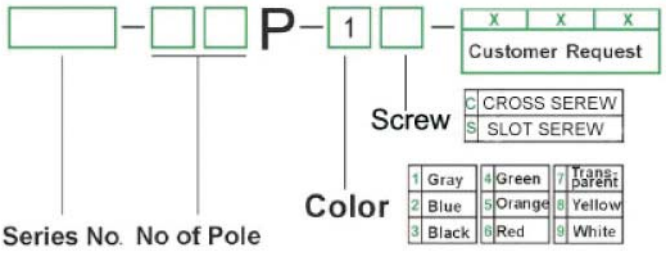

Multi Purpose Pluggable Terminal Blocks Series

KLS2-MPKH-5.00/7.50 Series Pitch=5.00/7.50

Capability	
Rated voltage/Rated current	300V/15A
Wire range	28-12AWG 2.5mm^2
Withstand Voltage	AC2000V/1Min
Insulation resistance	5000MΩ/1000V
Contact resistance	20mΩ
Temp.Range	-40°C~+105°C
MAX Soldering	+250°C for 5Sec
Strip length	8-9mm
Material	
Housing	PA66,UL94V-0
Contact	Phosphor Bronze



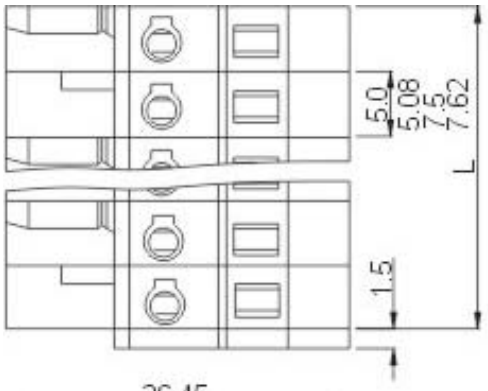

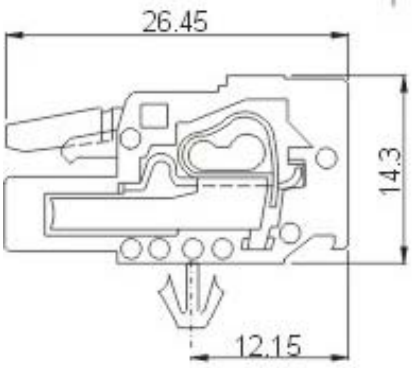

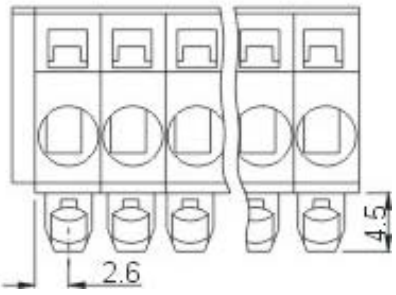

ORDER INFORMATION

HOW TO ORDER:

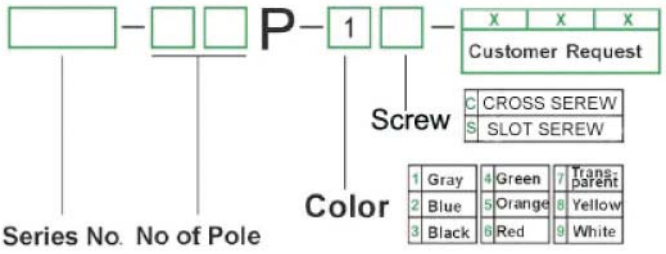

Multi Purpose Pluggable Terminal Blocks Series

KLS2-MPKN-3.50/3.81 Series Pitch=3.50/3.81

Capability	
Rated voltage/Rated current	300V/10A
Wire range	28-14AWG 1.5mm^2
Withstand Voltage	AC2000V/1Min
Insulation resistance	5000MΩ/1000V
Contact resistance	20mΩ
Temp.Range	-40°C~+105°C
MAX Soldering	+250°C for 5Sec
Strip length	7-8mm
Material	
Housing	PA66,UL94V-0
Pin header	Brass,Tin plated
Contact	Phosphor Bronze

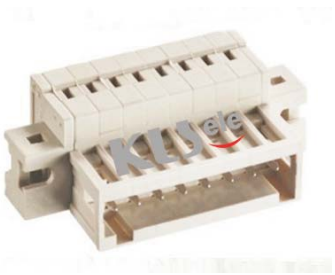

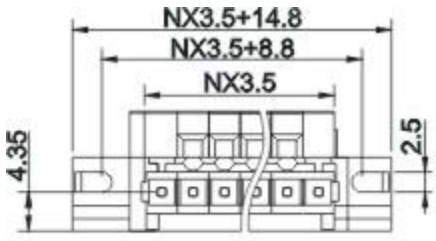

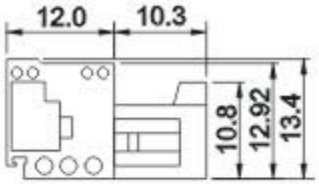

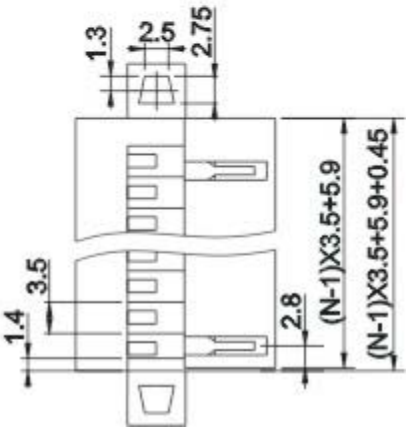

ORDER INFORMATION

HOW TO ORDER:

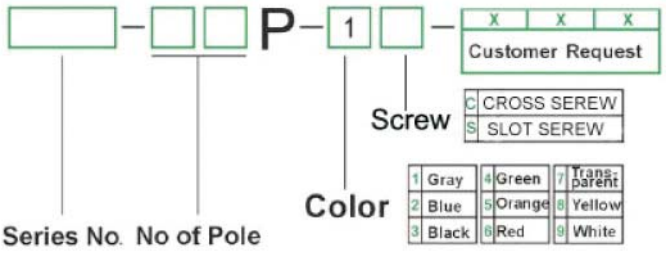

Multi Purpose Pluggable Terminal Blocks Series

KLS2-MPKR-5.00/7.50 Series Pitch=5.00/7.50

Capability	
Rated voltage/Rated current	300V/15A
Wire range	28-12AWG 2.5mm^2
Withstand Voltage	AC2000V/1Min
Insulation resistance	5000MΩ/1000V
Contact resistance	20mΩ
Temp.Range	-40°C~+105°C
MAX Soldering	+250°C for 5Sec
Strip length	8-9mm
Material	
Housing	PA66,UL94V-0
Contact	Phosphor Bronze



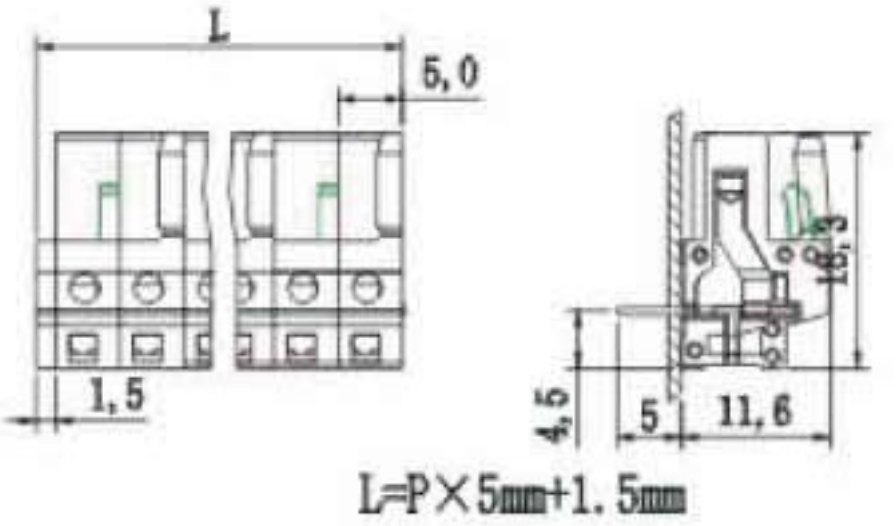

ORDER INFORMATION

HOW TO ORDER:

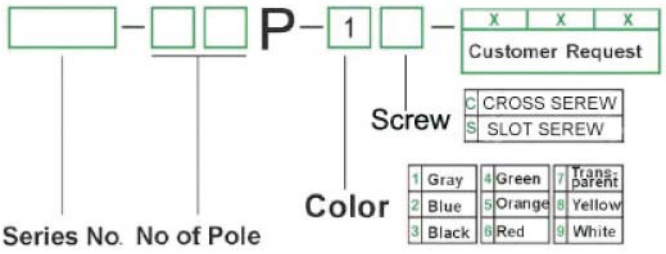

Terminal block

Multi Purpose Pluggable Terminal Blocks Series

KLS2-MPKS-5.00/7.50 Series Pitch=5.00/7.50

Capability	
Rated voltage/Rated current	300V/15A
Wire range	28-12AWG 2.5mm^2
Withstand Voltage	AC2000V/1Min
Insulation resistance	5000MΩ/1000V
Contact resistance	20mΩ
Temp.Range	-40°C~+105°C
MAX Soldering	+250°C for 5Sec
Strip length	8-9mm
Material	
Housing	PA66,UL94V-0
Contact	Phosphor Bronze



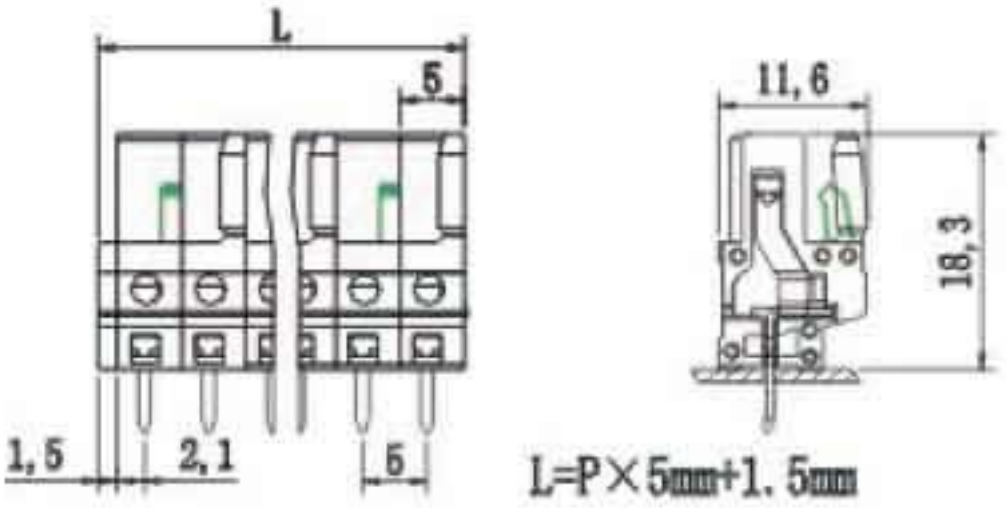

ORDER INFORMATION

HOW TO ORDER:

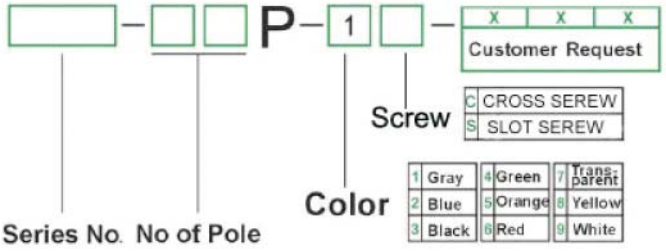

Multi Purpose Pluggable Terminal Blocks Series

KLS2-MPKV-3.50/3.81 Series Pitch=3.50/3.81

Capability	
Rated voltage/Rated current	300V/10A
Wire range	28-14AWG 1.5mm^2
Withstand Voltage	AC2000V/1Min
Insulation resistance	5000MΩ/1000V
Contact resistance	20mΩ
Temp.Range	-40°C~+105°C
MAX Soldering	+250°C for 5Sec
Strip length	7-8mm
Material	
Housing	PA66,UL94V-0
Pin header	Brass,Tin plated
Contact	Phosphor Bronze



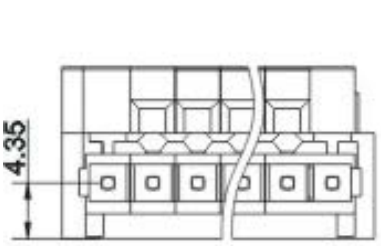

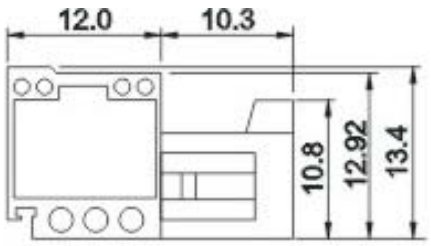

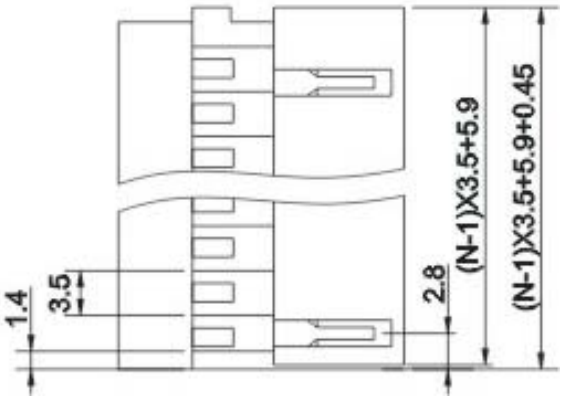

ORDER INFORMATION

HOW TO ORDER:

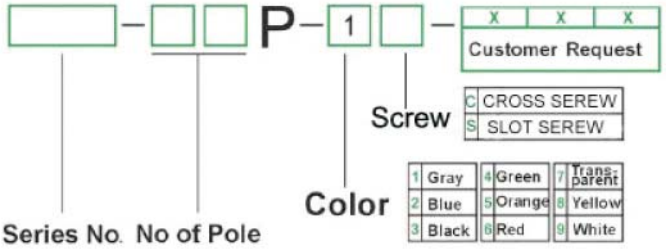

Multi Purpose Pluggable Terminal Blocks Series

KLS2-MPKV-5.00/7.50 Series Pitch=5.00/7.50

Capability	
Rated voltage/Rated current	300V/15A
Wire range	28-12AWG 2.5mm^2
Withstand Voltage	AC2000V/1Min
Insulation resistance	5000MΩ/1000V
Contact resistance	20mΩ
Temp.Range	-40°C~+105°C
MAX Soldering	+250°C for 5Sec
Strip length	8-9mm
Material	
Housing	PA66,UL94V-0
Contact	Phosphor Bronze





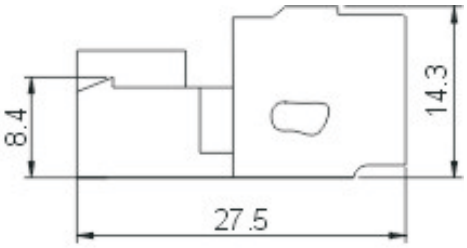

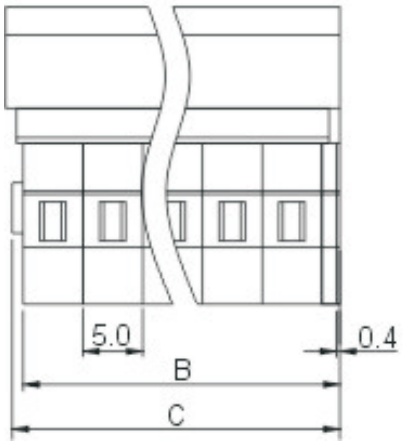

ORDER INFORMATION

HOW TO ORDER:

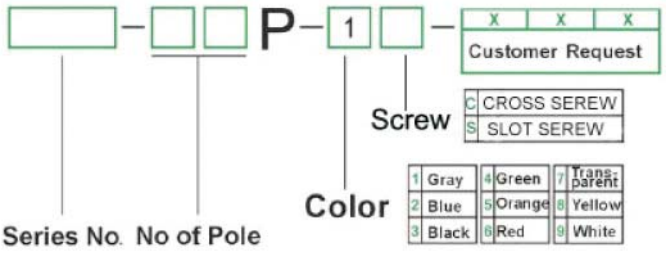

Terminal block

Multi Purpose Pluggable Terminal Blocks Series

KLS2-MPKY-5.00/7.50 Series Pitch=5.00/7.50

Capability	
Rated voltage/Rated current	300V/15A
Wire range	28-12AWG 2.5mm^2
Withstand Voltage	AC2000V/1Min
Insulation resistance	5000MΩ/1000V
Contact resistance	20mΩ
Temp.Range	-40°C~+105°C
MAX Soldering	+250°C for 5Sec
Strip length	8-9mm
Material	
Housing	PA66,UL94V-0
Contact	Phosphor Bronze



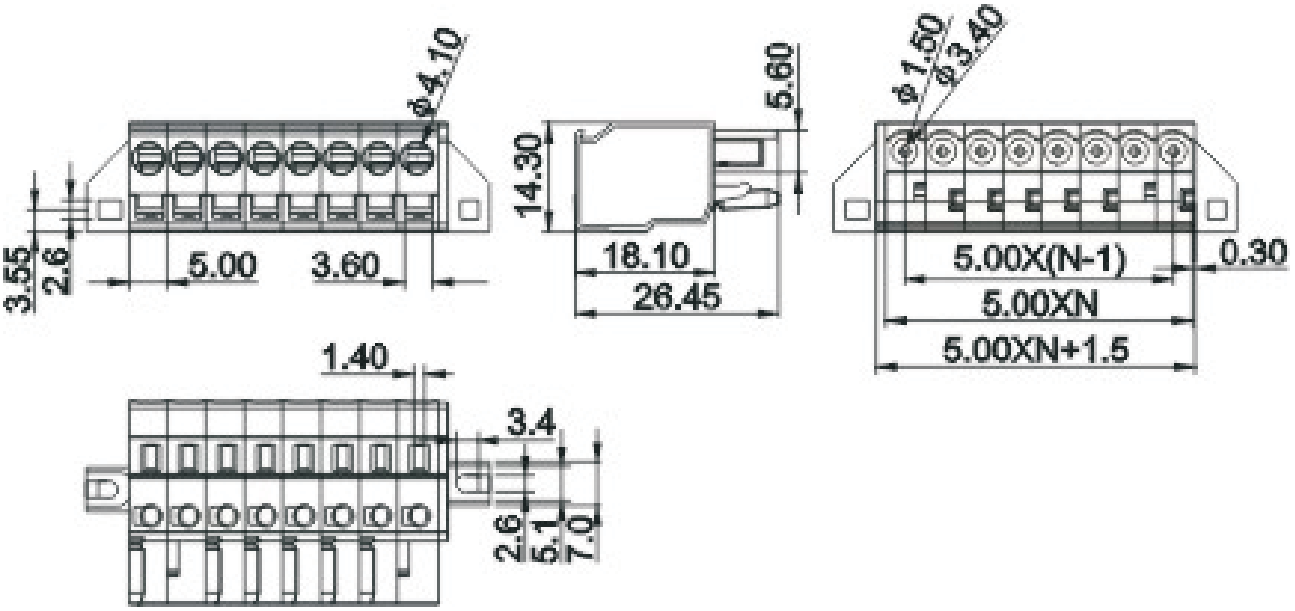

ORDER INFORMATION

HOW TO ORDER:

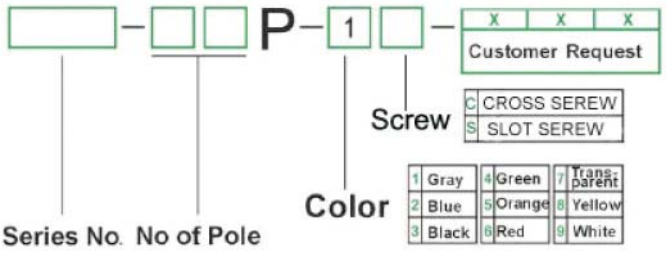

Multi Purpose Pluggable Terminal Blocks Series

KLS2-MPR-3.50/3.81 Series Pitch=3.50/3.81

Capability	
Rated voltage/Rated current	300V/10A
Withstand Voltage	AC2000V/1Min
Insulation resistance	5000MΩ/1000V
Contact resistance	20mΩ
Temp.Range	-40°C~+105°C
MAX Soldering	+250°C for 5Sec
Material	
Housing	PA66,UL94V-0
Pin header	Brass,Tin plated



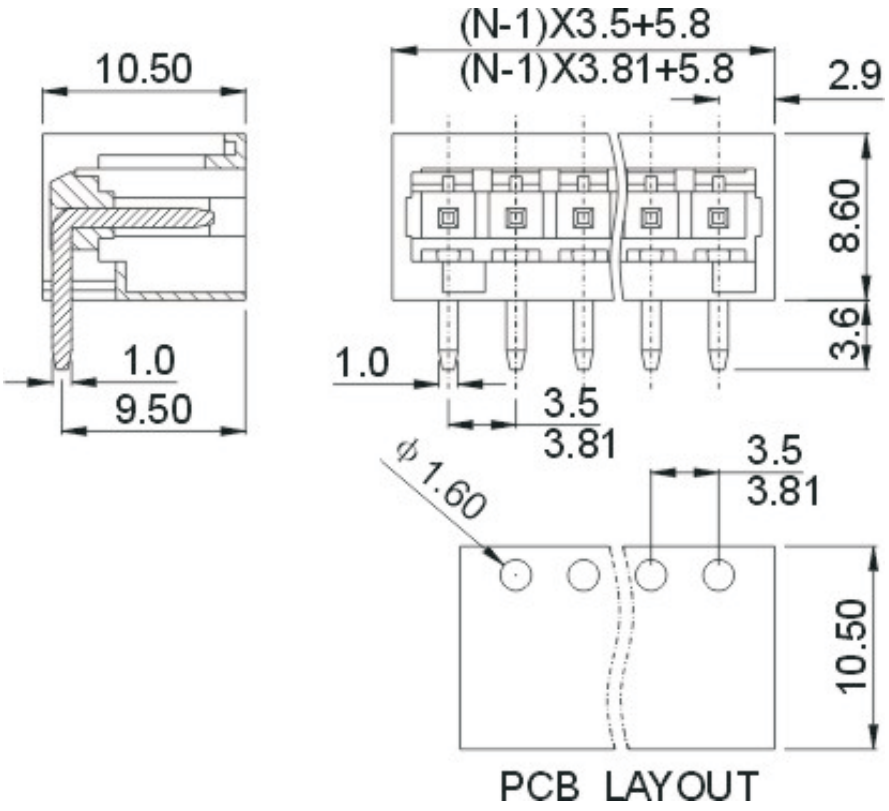

ORDER INFORMATION

HOW TO ORDER:

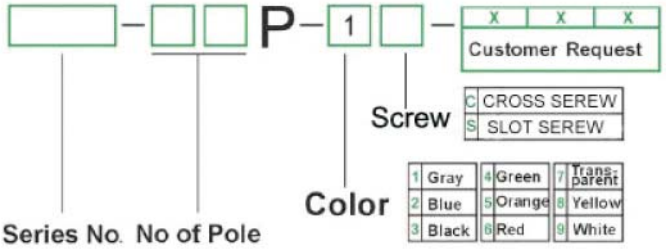

Multi Purpose Pluggable Terminal Blocks Series

KLS2-MPRA-5.00/7.50 Series Pitch=5.00/7.50

Capability	
Rated voltage/Rated current	300V/15A
Wire range	28-12AWG 2.5mm^2
Withstand Voltage	AC2000V/1Min
Insulation resistance	5000MΩ/1000V
Contact resistance	20mΩ
Temp.Range	-40°C~+105°C
MAX Soldering	+250°C for 5Sec
Strip length	8-9mm
Material	
Housing	PA66,UL94V-0
Contact	Phosphor Bronze



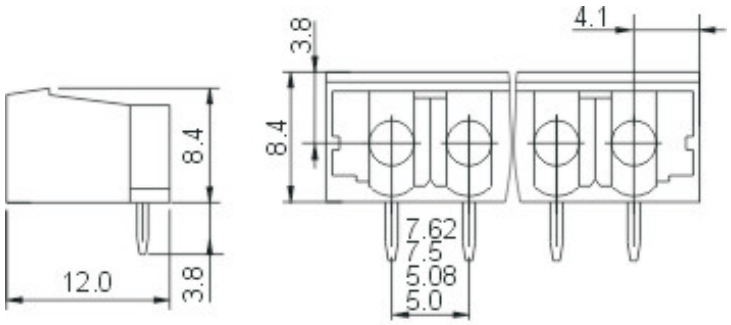

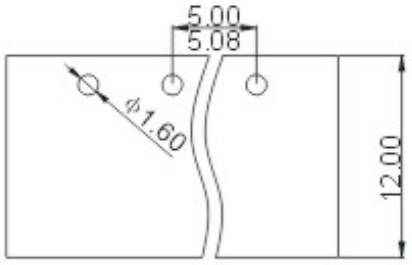

PCB LAYOUT

ORDER INFORMATION

HOW TO ORDER:

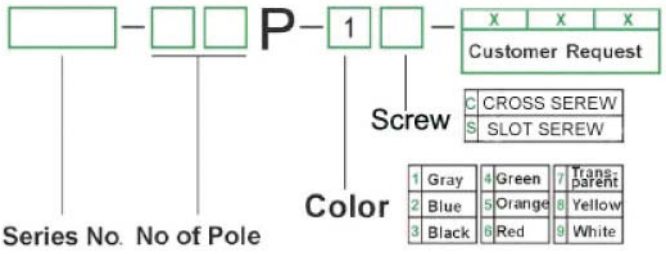

Multi Purpose Pluggable Terminal Blocks Series

KLS2-MPRB-5.00/7.50 Series Pitch=5.00/7.50

Capability	
Rated voltage/Rated current	300V/15A
Wire range	28-12AWG 2.5mm^2
Withstand Voltage	AC2000V/1Min
Insulation resistance	5000MΩ/1000V
Contact resistance	20mΩ
Temp.Range	-40°C~+105°C
MAX Soldering	+250°C for 5Sec
Strip length	8-9mm
Material	
Housing	PA66,UL94V-0
Contact	Phosphor Bronze

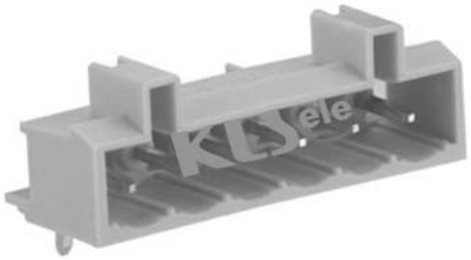

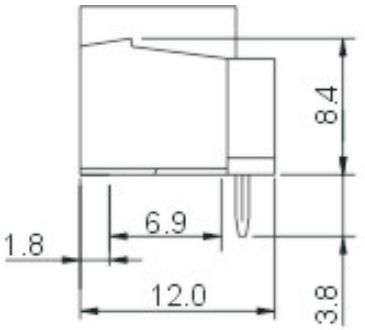

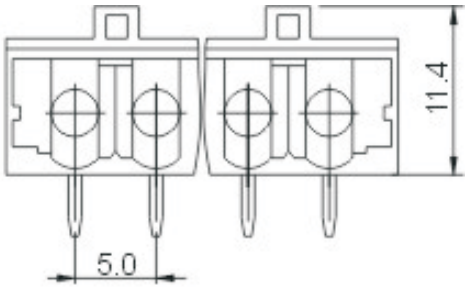

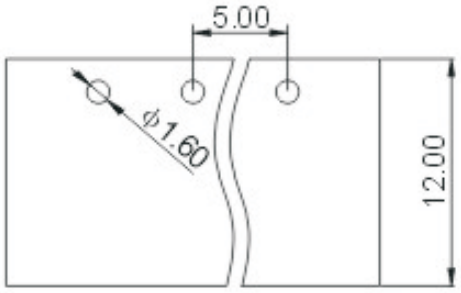

PCB LAYOUT

ORDER INFORMATION

HOW TO ORDER:

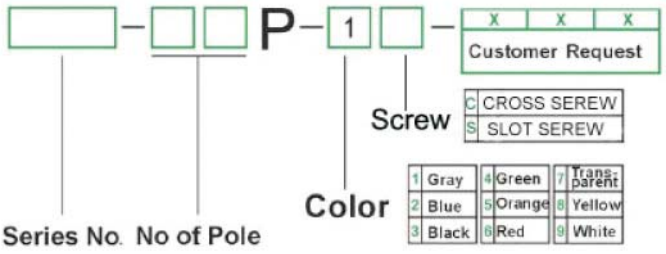

Multi Purpose Pluggable Terminal Blocks Series

KLS2-MPV-3.50/3.81 Series Pitch=3.50/3.81

Capability	
Rated voltage/Rated current	300V/10A
Withstand Voltage	AC2000V/1Min
Insulation resistance	5000MΩ/1000V
Contact resistance	20mΩ
Temp.Range	-40°C~+105°C
MAX Soldering	+250°C for 5Sec
Material	
Housing	PA66,UL94V-0
Pin header	Brass,Tin plated

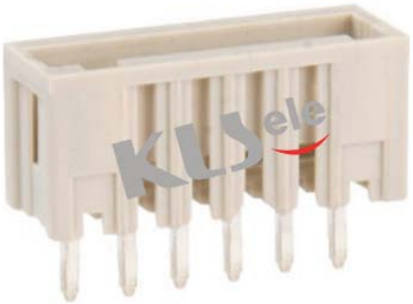

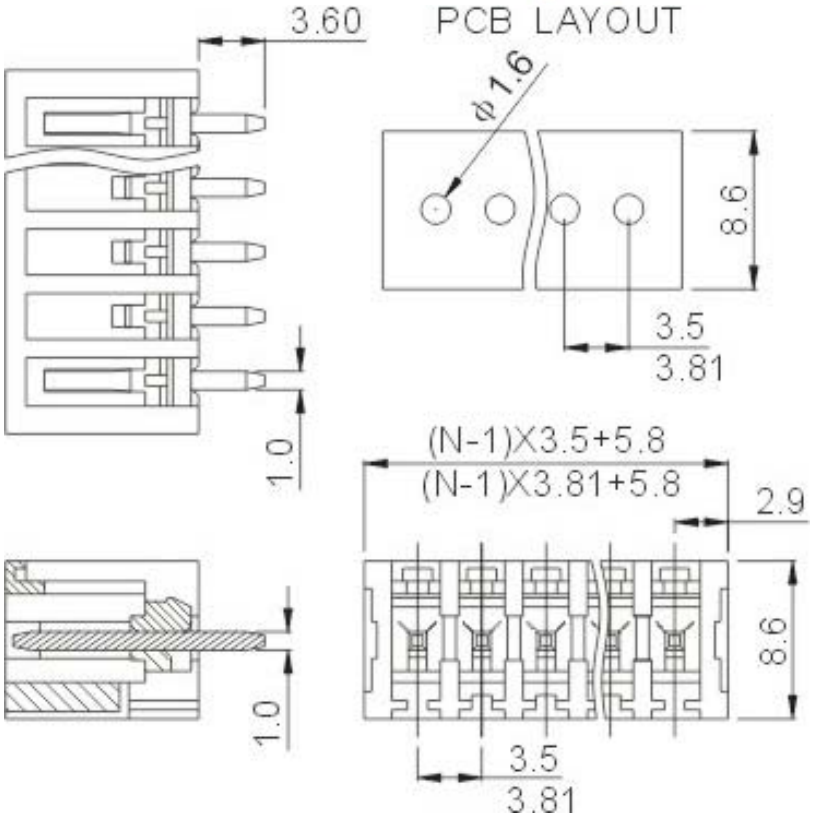

ORDER INFORMATION

HOW TO ORDER:

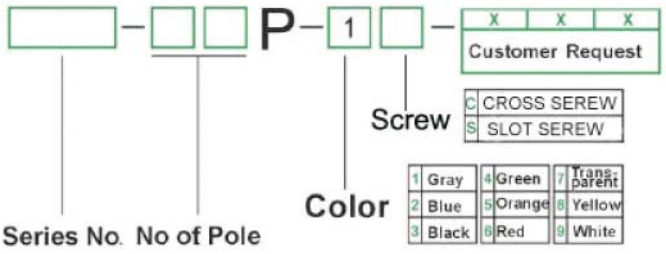

Multi Purpose Pluggable Terminal Blocks Series

KLS2-MPVA-5.00/7.50 Series Pitch=5.00/7.50

Capability	
Rated voltage/Rated current	300V/15A
Wire range	28-12AWG 2.5mm^2
Withstand Voltage	AC2000V/1Min
Insulation resistance	5000MΩ/1000V
Contact resistance	20mΩ
Temp.Range	-40°C~+105°C
MAX Soldering	+250°C for 5Sec
Strip length	8-9mm
Material	
Housing	PA66,UL94V-0
Contact	Phosphor Bronze



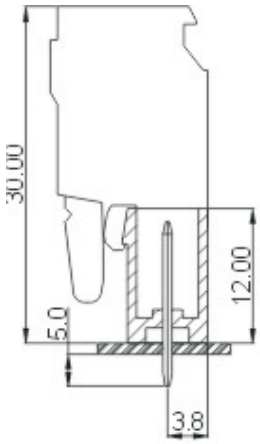

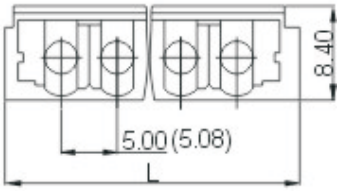

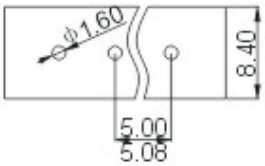

PCB LAY OUT

ORDER INFORMATION

HOW TO ORDER:

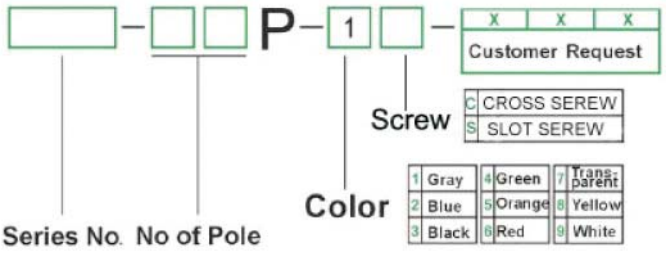

Multi Purpose Pluggable Terminal Blocks Series

KLS2-MPVB-5.00/7.50 Series Pitch=5.00/7.50

Capability	
Rated voltage/Rated current	300V/15A
Wire range	28-12AWG 2.5mm^2
Withstand Voltage	AC2000V/1Min
Insulation resistance	5000MΩ/1000V
Contact resistance	20mΩ
Temp.Range	-40°C~+105°C
MAX Soldering	+250°C for 5Sec
Strip length	8-9mm
Material	
Housing	PA66,UL94V-0
Contact	Phosphor Bronze



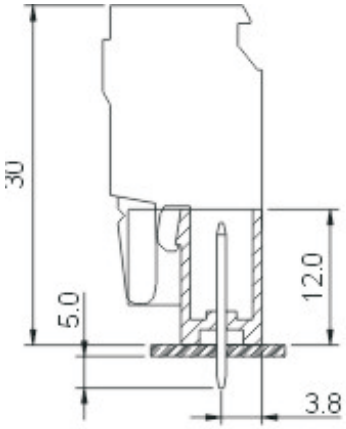

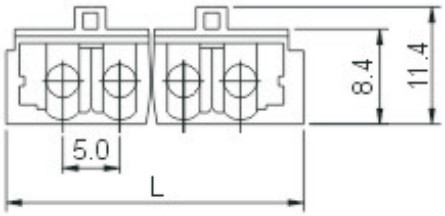

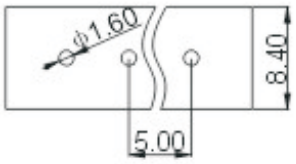

PCB LAY OUT

ORDER INFORMATION

HOW TO ORDER:

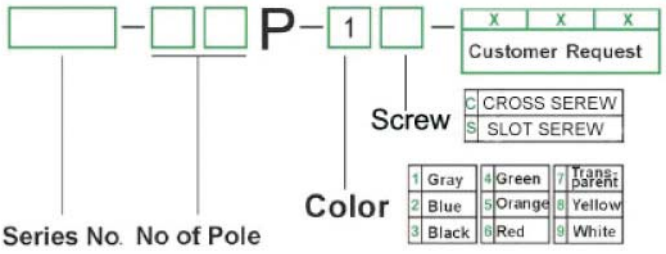

KLS

1-Connectors & Connector Components-Разъемы, соединители и их узлы

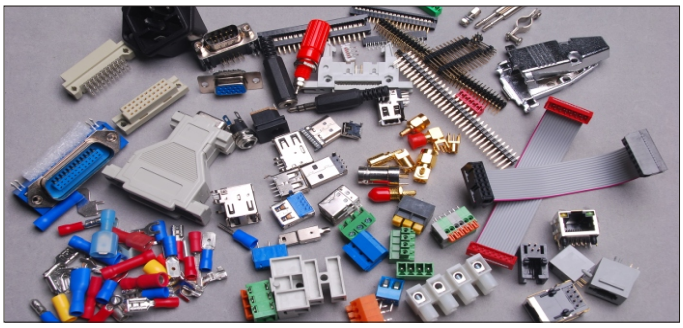

1-1 Wire to Board connectors
1-2 Board to Board connectors
1-3 Input/Output (Box to Box)
1-4 Socket & Card connectors
1-5 Power connectors
1-6 Audio & Video connectors
1-7 RF & Coax
1-8 Terminal Blocks & Strips
1-9 **Terminals & Splices**

More . . .



KLS ELECTRONIC CO; LTD. WWW.CNKLS.COM Email:sales@cnkls.com
Tel:0086 574 86824882 Fax:0086 574 86824882

Terminals Series

KLS8-01104 Circular bare terminal Series

Terminal Material: COPPER

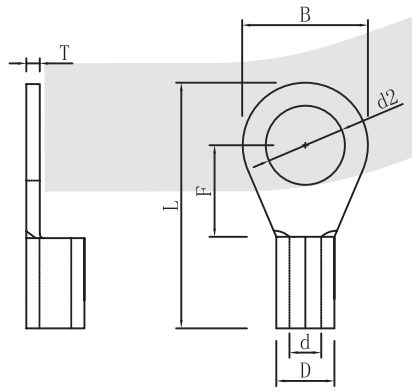



Item No.	Section of lead	Dimension							
		USA BOLTNO	d2	B	L	F	H	D	d
			mm	mm	mm	mm	mm	mm	mm
RNB1.25~3	0.5~1.5mm^2 (22~16A.W.G.) I Max=19A	#4	3.2mm	5.7	12.6	4.95	4.8	3.4	1.7
RNBM1.25-3.5		#6	3.7mm	6.6	14.4	6.3			
RNBS1.25-4		#8	4.3mm	6.6	14.4	6.3			
RNBL1.25-4		#8	4.3mm	8.0	15.8	7.0			
RNB1.25-5		#10	5.3mm	8.0	15.8	7.0			
RNB1.25-6		1/4	6.5mm	11.6	21.8	11.1			
RNB1.25-8		5/16	8.4mm	11.6	21.8	11.1			
RNB1.25-10		3/8	10.5mm	13.6	25.5	13.9			
RNB2-3	1.5~2.5mm^2 (16~14A.W.G.) I Max=27A	#4	3.2mm	6.6	12.3	4.3	4.8	4.1	2.3
RNBL2-3.5		#6	3.7mm	8.5	16.8	7.75			
RNBS2-3.5		#6	4.3mm	6.6	16.0	7.0			
RNBL2-4		#8	4.3mm	8.5	16.8	7.75			
RNBS2-4		#8	5.3mm	8.5	16.8	7.75			
RNBL2-5		#10	5.3mm	9.5	16.8	7.25			
RNB2-5		#10	6.5mm	12.0	21.8	11.0			
RNB2-6		5/16	8.4mm	12.0	21.8	11.0			
RNB2-6		3/8	10.5mm	13.6	25.5	13.9			

ORDER INFORMATION

KLS8-01104 - RNB1.25~3

- RNB1.25~3 — Item No.
- KLS8-01104 — Circular bare terminal Series
- KLS8-01104 - RNB1.25~3 — Part Number

Terminals Series

KLS8-01104 Circular bare terminal Series

Item No.	Section of lead	Dimension							
		USA BOLTNO	d2	B	L	F	H	D	d
			mm	mm	mm	mm	mm	mm	mm
RNB3.25-4	2.5~4mm² (14~12A.W.G.) I Max=37A	#8	4.3mm	8.0	18.0	7.7	6.0	5.0	3.0
RNBS3.25-5		#10	5.3mm	8.0	18.0	7.7			
RNBL3.25-5		#10	5.3mm	12.0	21.4	7.7			
RNB3.25-6		1/4	6.5mm	12.0	21.4	7.7			
RNBS5.5-3.5	4~6mm² (12~10A.W.G.) I Max=48A	#8	4.3mm	7.2	19.5	5.9	6.8	5.6	3.4
RNBL5.5-4		#8	4.3mm	9.5	19.5	8.3			
RNB5.5-4		#10	5.3mm	9.5	18.2	8.3			
RNB5.5-5		1/4	6.5mm	12.0	18.2	13.0			
RNB5.5-6		5/16	8.4mm	15.0	18.2	13.7			
RNB5.5-6		3/8	10.5mm	15.0	25.5	13.7			
RNB5.5-8		1/2	13.0mm	19.2	24.5	16.0			
RNB8-4	6~10mm² (8A.W.G) I Max=62A	#8	4.3mm	12.0	23.8	9.3	8.5	7.2	4.5
RNBS8-5		#10	5.3mm	8.8	23.8	11.1			
RNBM8-5		#10	5.3mm	12.0	23.8	9.3			
RNBL8-5		#10	5.3mm	15.0	29.8	13.8			
RNBS8-6		1/4	6.5mm	12.0	23.8	9.3			
RNBL8-6		1/4	6.5mm	15.0	29.8	13.8			
RNB8-8		5/16	8.4mm	15.0	29.8	13.8			
RNB8-10		3/8	10.5mm	15.0	29.8	13.8			
RNB14-4	10~16mm² (6A.W.G.) I Max=88A	#8	4.3mm	12.0	29.8	13.3	10.5	9.0	5.8
RNB14-5		#10	5.3mm	12.0	29.8	13.3			
RNBS14-6		1/4	6.5mm	12.0	29.8	13.3			
RNBL14-6		1/4	6.5mm	16.0	32.8	13.3			
RNB14-8		5/16	8.4mm	16.0	32.8	14.5			
RNB14-10		3/8	10.5mm	16.0	32.8	14.5			
RNB14-12		1/2	13.0mm	22.0	41.0	19.5			
RNBS22-5	16~25mm² (4A.W.G.) I Max=115A	#10	5.3mm	12.2	33.2	14.5	12.0	11.5	7.7
RNBL22-5		#10	5.3mm	16.5	33.7	13.5			
RNBS22-6		1/4	6.5mm	12.2	33.2	14.5			
RNBL22-6		1/4	6.5mm	16.5	33.7	13.5			
RNB22-8		5/16	8.4mm	16.5	33.7	13.5			
RNB22-10		3/8	10.5mm	16.5	33.7	13.5			
RNB22-11		7/16	11.5mm	22.0	42.5	19.5			
RNB22-12		1/2	13.0mm	22.0	42.5	19.5			
RNB35-5	35~50mm² (2A.W.G.) I Max=160A	#10	5.3mm	15.3	39.0	18.3	14.0	13.3	9.4
RNB35-6		1/4	6.5mm	15.3	39.0	18.3			
RNBS38-8		1/4	8.4mm	15.3	39.0	18.3			
RNBL38-8		5/16	8.4mm	22.0	42.7	17.7			
RNBS38-10		3/8	10.5mm	15.3	39.0	18.3			
RNBL38-10		7/16	10.5mm	22.0	42.7	17.7			
RNB38-12		1/2	13.0mm	22.0	42.7	17.7			

ORDER INFORMATION

KLS8-01104 - RNB1.25~3

- RNB1.25~3 — Item No.
- 01104 — Circular bare terminal Series
- KLS8 — Part Number

Terminals Series

KLS8-01103 Circular pre-insulation Terminals Series

Maximum Electrical Rating: 105°C 600 Volts Max.
Insulation Material: Vinyl
Terminal Material: Copper

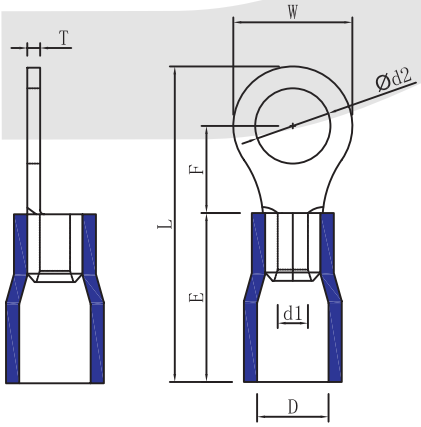



Item No.	Conductor cross-section	Dimension							Color
		USA Bolt No.	d2	W	L	F	E	D	
				mm	mm	mm	mm	mm	
RV1.25-3	0.5~1.5mm² (22~16A.W.G.) I Max=19A T Size:0.75mm	#4	3.2mm	5.7	17.8	4.95	10.0	4.3	Red
RVS1.25-3.5		#6	3.7mm	5.7	17.8	4.95			
RVM1.25-3.5		#6	3.7mm	6.6	20.1	6.3			
RVL1.25-3.5		#6	3.7mm	8	21.5	7			
RVS1.25-4		#8	4.3mm	6.6	20.1	6.3			
RVL1.25-4		#8	4.3mm	8	21.5	7			
RV1.25-5		#10	5.3mm	8	21.5	7			
RV1.25-6		1/4	6.5mm	11.6	27.5	11.1			
RV1.25-8		5/16	8.4mm	11.6	27.5	11.1			
RV1.25-10		3/8	10.5mm	13.6	31.6	13.9			
RV2-3	1.5~2.5mm² (16~14A.W.G.) I Max=27A T Size:0.80mm	#4	3.2mm	6.6	17.8	4.3	10.0	4.9	Blue
RVS2-3.5		#6	3.7mm	6.6	17.8	4.3			
RVM2-3.5		#6	3.7mm	6.6	21	7			
RVL2-3.5		#6	3.7mm	8.5	22.5	7.75			
RVS2-4		#8	4.3mm	6.6	21.0	7.0			
RVL2-4		#8	4.3mm	8.5	22.5	7.75			
RVS2-5		#10	5.3mm	8.5	22.5	7.75			
RVL2-5		#10	5.3mm	9.5	22.5	7.25			
RV2-6		1/4	6.5mm	12.0	27.6	11.0			
RV2-8		5/16	8.4mm	12.0	27.6	11.0			
RV2-10		3/8	10.5mm	13.6	30.2	13.9			

ORDER INFORMATION

KLS8-01103 - RV1.25 - 3

- Item NO.
- Circular pre-insulation Terminals Series
- Part Number

Terminals Series

KLS8-01103 Circular pre-insulation Terminals Series

Item No.	Conductor cross-section	Dimension							Color
		USA Bolt No.	d2	W	L	F	E	D	
				mm	mm	mm	mm	mm	
RV3.5-4	2.5~4mm² (14~12A.W.G.) I Max=37A T Size:1.0mm	#8	4.3mm	8.0	24.8	7.7	12.5	6.2	Black
RVS3.5-5		#10	5.3mm	8.0	24.8	7.7			
RVL3.5-5		#10	5.3mm	12.0	27.9	7.7			
RV3.5-6		1/4	6.5mm	12.0	27.9	7.7			
RV5.5-3.5	4~6mm² (12~10A.W.G.) I Max=48A T Size:1.0mm	#6	3.7mm	7.2	21.4	5.9	12.5	6.7	Yellow
RVS5.5-4		#8	4.3mm	7.2	21.5	5.9			
RVL5.5-4		#8	4.3mm	9.5	25.5	8.3			
RV5.5-5		#10	5.3mm	9.5	25.5	8.3			
RV5.5-6		1/4	6.5mm	12.0	31.5	13.0			
RV5.5-8		5/16	8.4mm	15.0	33.7	13.7			
RV5.5-10		3/8	10.5mm	15.0	33.7	13.7			
RV5.5-12		1/2	13.0mm	19.2	38.1	16.0			

ORDER INFORMATION

KLS8-01103 - RV1.25 - 3

- 3 — Item NO.
- 01103 — Circular pre-insulation Terminals Series
- KLS8 — Part Number

Terminals Series

KLS8-01116 Terminal Series

Terminal Material: Brass

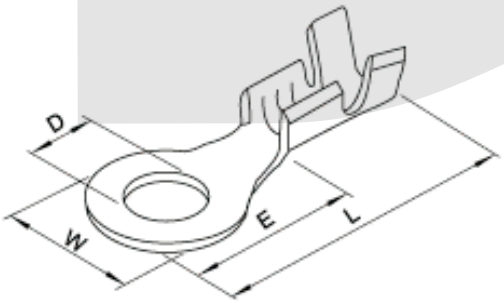



Item No.	Treatment	Material	T mm	Dimension (mm)			Wire range AWG
				W	L	D	
OT-2.2T	Tin-plate	Brass	0.3	4.0	9.7	2.2	
OT-2.5A				5.2	10.8	2.5	
OT-3.2A			0.3~0.5	6.2	13.0	3.2	
OT-3.2C				7.0	16.0	4.2	
OT-4.2A				7.0	16.0	4.2	
OT-4.2B				8.0	16.0	4.2	
OT-5.2C			0.4~0.5	8.0	16.0	5.2	
OT-6.2A				10.0	20.0	6.2	
OT-8.2B				12.0	25.0	8.2	
OT-10.2B				15.0	25.0	10.2	
OT-12.2B				17.5	28.0	12.2	

ORDER INFORMATION

KLS8-01116 - OT-2. 2T

- OT-2. 2T — Item No.
- KLS8-01116 — Terminal Series
- KLS8-01116 - OT-2. 2T — Part Number

Terminals Series

KLS8-01133 Ground terminal Series

Terminal Material: Brass

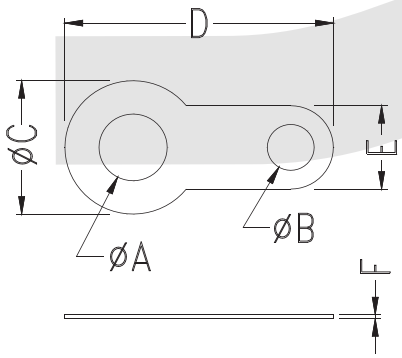



Model No.	A	B	C	D	E	F	Packaging
ND-2	2.2	1.5	5	12	2.8	0.25	1000PCS
ND-3	3.2	1.5	6.4	14	3	0.3	
ND-4	4.2	1.5	8.0	15	3.5	0.3	
ND-5	5.2	1.5	10.0	18	4.2	0.3	
ND-6	6.2	2.0	12.0	21	5.0	0.3	
ND-8	8.2	2.0	16.0	25	5.0	0.3	

ORDER INFORMATION

KLS8-01133 - ND-2

- ND-2: Item No.
- 01133: Ground terminal Series
- KLS8-01133: Part Number

Terminals Series

KLS8-01101 Insulated Spade Terminals Series

Maximum Electrical Rating: 105°C 600 Volts Max.
Insulation Material: Vinyl
Terminal Material: Copper

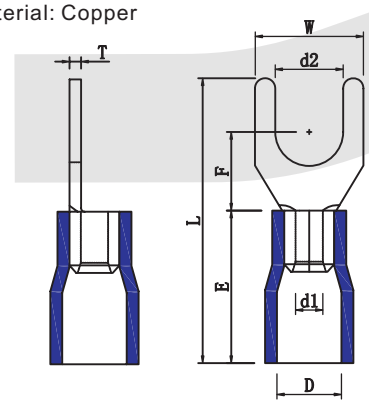



Item No.	Conductor cross-section	Dimension							Color
		USA Bolt No.	d2	W	L	F	E	D	
				mm	mm	mm	mm	mm	
SV1.25-3	0.5~1.5mm² (22~16A.W.G.) I Max=19A T Size:0.75mm	#4	3.2mm	5.7	21.2	6.5	10.3	4.3	Red
SVS1.25-3.5		#6	3.7mm	5.7	21.2	6.5			
SVL1.25-3.5		#6	3.7mm	6.4	21.2	6.5			
SVS1.25-4		#8	4.3mm	6.4	21.2	6.5			
SVM1.25-4		#8	4.3mm	7.2	21.2	6.5			
SVL1.25-4		#8	4.3mm	8.1	21.2	6.5			
SVS1.25-5		#10	5.3mm	8.1	21.2	6.5			
SVL1.25-5		#10	5.3mm	9.5	21.2	6.5			
SVS1.25-6		1/4	6.5mm	9.5	21.2	6.5			
SVL1.25-6		1/4	6.5mm	12.0	27.2	11.0			
SV2-3	1.5~2.5mm² (16~14A.W.G.) I Max=27A T Size:0.80mm	#4	3.2mm	5.7	21.2	6.5	10.3	4.9	Blue
SVS2-3.5		#6	3.7mm	5.7	21.2	6.5			
SVL2-3.5		#6	3.7mm	6.4	21.2	6.5			
SVS2-4		#8	4.3mm	6.4	21.2	6.5			
SVM2-4		#8	4.3mm	7.2	21.2	6.5			
SVL2-4		#8	4.3mm	8.1	21.2	6.5			
SVS2-5		#10	5.3mm	8.1	21.2	6.5			
SVL2-5		#10	5.3mm	9.5	21.2	6.5			
SVS2-6		1/4	6.5mm	9.5	21.2	6.5			
SVL2-6		1/4	6.5mm	12.0	27.2	11.0			
SV3.5-4	2.5~4mm² (14~12A.W.G.) I Max=37A T Size:1.0mm	#8	4.3mm	8.0	24.8	7.0	12.5	6.2	Black
SV3.5-5		#10	5.3mm	8.0	24.8	7.0			
SV3.5-6		1/4	6.5mm	12.0	28.0	12.1			
SV5.5-3.5	4~6mm² (12~10A.W.G.) I Max=48A T Size:1.0mm	#6	3.7mm	8.3	25.2	7.5	12.5	6.7	Yellow
SVS5.5-4		#8	4.3mm	8.3	25.2	7.5			
SVL5.5-4		#8	4.3mm	9.0	23.9	7.5			
SV5.5-5		#10	5.3mm	9.0	23.9	7.5			
SVS5.5-6		1/4	6.5mm	9.0	23.9	7.5			
SVL5.5-6		1/4	6.5mm	12.0	31.2	12.0			
SV5.5-8		5/16	8.4mm	14.0	30.0	11.5			

ORDER INFORMATION

KLS8-01101 - SV1.25 - 3

- 3 — Item NO.
- 01101 — Insulated Spade Terminals Series
- KLS8 — Part Number

Terminals Series

KLS8-01102 Cross bare terminal Series

Terminal Material: COPPER

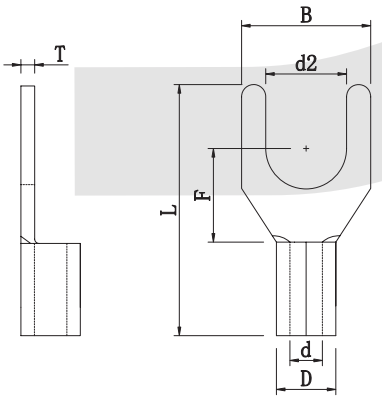



Item No.	Section of lead	Dimension							
		USA BOLTNO	d2	B	L	F	H	D	d
			mm	mm	mm	mm	mm	mm	mm
SNB1.25~3	0.5~1.5mm^2 (22~16A.W.G.) I Max=19A	#4	3.2mm	5.7	16.0	6.5	4.8	3.4	1.7
SNBS1.25-3.5		#6	3.7mm	5.7	16.0	6.5			
SNBL1.25-3.5		#6	3.7mm	6.4	16.0	6.5			
SNBS1.25-4		#8	4.3mm	6.4	16.0	6.5			
SNBM1.25-4		#8	4.3mm	7.2	16.0	6.5			
SNBL1.25-4		#8	4.3mm	8.1	16.0	6.5			
SNBS1.25-5		#10	5.3mm	8.1	16.0	6.5			
SNBL1.25-5		#10	5.3mm	9.5	16.0	6.5			
SNBS1.25-6		1/4	6.5mm	9.5	16.0	6.5			
SNBL1.25-6		1/4	6.5mm	12.0	22.0	11.0			
SNB2-3	1.5~2.5mm^2 (16~14A.W.G.) I Max=27A	#4	3.2mm	5.7	16.0	6.5	4.8	4.1	2.3
SNBS2-3.5		#6	3.7mm	5.7	16.0	6.5			
SNBL2-3.5		#6	3.7mm	6.4	16.0	6.5			
SNBS2-4		#8	4.3mm	6.4	16.0	6.5			
SNBM2-4		#8	4.3mm	7.2	16.0	6.5			
SNBL2-4		#8	4.3mm	8.1	16.0	6.5			
SNBS2-5		#10	5.3mm	8.1	16.0	6.5			
SNBL2-5		#10	5.3mm	9.5	16.0	6.5			
SNBS2-6		1/4	6.5mm	9.5	16.0	6.5			
SNBL2-6		1/4	6.5mm	12.0	22.0	11.0			

ORDER INFORMATION

KLS8-01102 - SNB1.25~3

- SNB1.25~3 — Item No.
- KLS8-01102 — Cross bare terminal Series
- KLS8-01102 - SNB1.25~3 — Part Number

Terminals Series

KLS8-01102 Cross bare terminal Series

Item No.	Section of lead	USA BOLTNO	Dimension						
			d2	B	L	F	H	D	d
			mm	mm	mm	mm	mm	mm	mm
SNB3.25-4	2.5~4mm^2 (14~12A.W.G.) I Max=37A	#8	4.3mm	8.0	18.3	7.0	6.0	5.0	3.0
SNB3.25-5		#10	5.3mm	8.0	18.3	7.0			
SNB3.25-6		1/4	6.5mm	12.0	21.5	12.1			
SNB5.5-3.5	4~6mm^2 (12~10A.W.G.) I Max=48A	#6	3.7mm	8.3	19.5	7.5	6.8	5.6	3.4
SNBS5.5-4		#8	4.3mm	8.3	19.5	7.5			
SNBL5.5-4		#8	4.3mm	9.0	18.2	7.5			
SNB5.5-5		#10	5.3mm	9.0	18.2	7.5			
SNBS5.5-6		1/4	6.5mm	9.0	18.2	7.5			
SNBL5.5-6		1/4	6.5mm	12.0	25.5	12.0			
SNB5.5-8		5/16	8.4mm	14.0	24.5	11.5			

ORDER INFORMATION

KLS8-01102 - SNB1.25~3

- SNB1.25~3 — Item No.
- 01102 — Cross bare terminal Series
- KLS8 — Part Number

Terminals Series

KLS8-01117 Terminal Series

Terminal Material: Brass



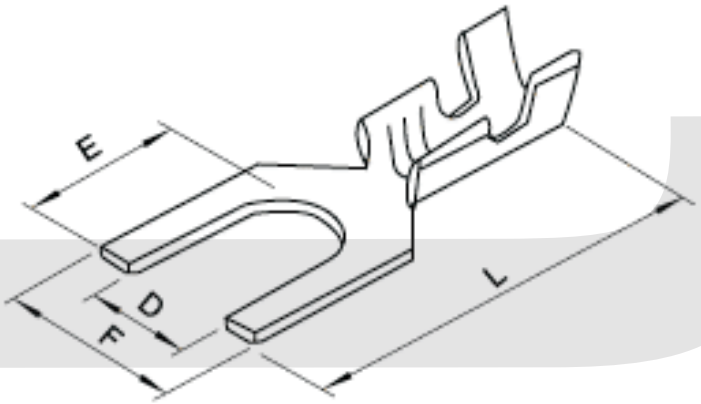

Item No.	Treatment	Material	T (mm)	Dimension(mm)				Wire range (AWG#)
				W	E	L	D	
K-3.2			0.5	7.0	7.0	15	3.2	18~22
K-4.2			0.5	7.5	7.0	17.5	4.2	18~22

ORDER INFORMATION

KLS8-01117 - K-3. 2

- K-3. 2 — Item No.
- KLS8-01117 — Terminal Series
- KLS8-01117 - K-3. 2 — Part Number

Terminals Series

KLS8-01142 Hooded Pre-insulating terminal Series

Maximum Electrical Rating: 105°C 600 Volts MAX.
Insulation Material: VINYL
Terminal Material: COPPER

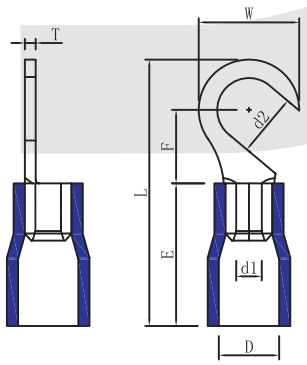



WIRE RANGE A. W. G. mm^2	ITEM NO.	STUD SIZE		DIMENSION inch(mm)							Q'TY
	BUTTED SEAM	d2		W	F	L	E	D	d1	T	BOX
22-16A. W. G. 0. 5-1. 5mm^2	HV1. 25-3. 5	#6	0. 146 3. 7	0. 315 8	0. 276 7	0. 819 20. 8	0. 394 10	0. 157 4	0. 067 1. 7	0. 03 0. 75	1000
	HV1. 25-4	#8	0. 169 4. 3	0. 315 8	0. 276 7	0. 819 20. 8	0. 394 10	0. 157 4	0. 067 1. 7	0. 03 0. 75	1000
	HV1. 25-5	#10	0. 209 5. 3	0. 315 8	0. 276 7	0. 819 20. 8	0. 394 10	0. 157 4	0. 067 1. 7	0. 03 0. 75	1000
	HV1. 25-6	1/4	0. 252 6. 4	0. 457 11. 6	0. 433 11	1. 055 26. 8	0. 394 10	0. 157 4	0. 067 1. 7	0. 03 0. 75	1000
16-14A. W. G. 1. 5-2. 5mm^2	HV2-3. 5	#6	0. 146 3. 7	0. 335 8. 5	0. 291 7. 4	0. 858 21. 8	0. 394 10	0. 177 4. 5	0. 091 2. 3	0. 31 0. 8	1000
	HV2-4	#8	0. 169 4. 3	0. 335 8. 5	0. 291 7. 4	0. 858 21. 8	0. 394 10	0. 177 4. 5	0. 091 2. 3	0. 31 0. 8	1000
	HV2-5	#10	0. 209 5. 3	0. 374 9. 5	0. 287 7. 3	0. 858 21. 8	0. 394 10	0. 177 4. 5	0. 091 2. 3	0. 31 0. 8	1000
	HV2-6	1/4	0. 252 6. 4	0. 472 12	0. 433 11	1. 055 26. 8	0. 394 10	0. 177 4. 5	0. 091 2. 3	0. 31 0. 8	1000
12-10A. W. G. 4-6mm^2	HV5. 5-3. 5	#6	0. 146 3. 7	0. 283 7. 2	0. 24 6. 1	0. 894 22. 7	0. 512 13	0. 252 6. 4	0. 134 3. 4	0. 039 1	500
	HV5. 5-4	#8	0. 169 4. 3	0. 374 9. 5	0. 374 9. 5	1. 055 26. 8	0. 512 13	0. 252 6. 4	0. 134 3. 4	0. 039 1	500
	HV5. 5-5	#10	0. 209 5. 3	0. 374 9. 5	0. 374 9. 5	1. 005 26. 8	0. 512 13	0. 252 6. 4	0. 134 3. 4	0. 039 1	500
	HV5. 5-6	1/4	0. 252 6. 4	0. 472 12	0. 406 10. 3	1. 161 29. 5	0. 512 13	0. 252 6. 4	0. 134 3. 4	0. 039 1	500
	HV5. 5-8	5/16	0. 331 8. 4	0. 591 15	0. 531 13. 5	1. 339 34	0. 512 13	0. 252 6. 4	0. 134 3. 4	0. 039 1	500

ORDER INFORMATION

KLS8-01142 - HV1.25-3.5

- HV1.25-3.5 — Item No.
- KLS8-01142 — Hooded Pre-insulating terminal Series
- KLS8-01142 - HV1.25-3.5 — Part Number

Terminals Series

KLS8-01108 Pipe pre-insulation terminal Series

1.TEMPERATURE RANGE: -40°C UP TO +105°C
2.TERMINAL MATERIAL: COPPER TUBE
3.PLATING: ELECTRO TIN PLATED
4.INSULATION MATERIAL: NYLON And VINYL

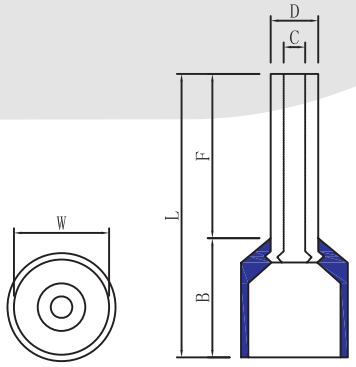



WIRE RANGE mm2 (A.W.G.)	ITEM NO.	DIMENSION mm(inch)						FRENCH COLOR	DIN COLOR	GERMAN COLOR	Q'TY BOX
		W	F	L	D	B	C				
0.25 (26)	E0206	1.9 (.075)	6.0 (.236)	10.4 (.409)	1.1 (.043)	4.4 (.173)	0.8 (.032)	VIOLET		LIGHT BLUE	1000
	E0208	1.9 (.075)	8.0 (.315)	12.4 (.488)	1.1 (.043)	4.4 (.173)	0.8 (.032)	VIOLET		LIGHT BLUE	1000
0.34 (24)	E0306	1.9 (.075)	6.0 (.236)	10.4 (.409)	1.1 (.043)	4.4 (.173)	0.8 (.032)	PINK		TURQUOISE	1000
	E0308	1.9 (.075)	8.0 (.315)	12.4 (.488)	1.1 (.043)	4.4 (.173)	0.8 (.032)	PINK		TURQUOISE	1000
0.5 (22)	E0505	2.6 (.102)	5.0 (.196)	11.0 (.433)	1.3 (.051)	6.0 (.236)	1.0 (.039)	WHITE	WHITE	ORANGE	1000
	E0506	2.6 (.102)	6.0 (.236)	12.0 (.472)	1.3 (.051)	6.0 (.236)	1.0 (.039)	WHITE	WHITE	ORANGE	1000
	E0508	2.6 (.102)	8.0 (.315)	14.0 (.551)	1.3 (.051)	6.0 (.236)	1.0 (.039)	WHITE	WHITE	ORANGE	1000
	E0510	2.6 (.102)	10.0 (.394)	16.0 (.630)	1.3 (.051)	6.0 (.236)	1.0 (.039)	WHITE	WHITE	ORANGE	1000
	E0512	2.6 (.102)	12.0 (.472)	18.0 (.709)	1.3 (.051)	6.0 (.236)	1.0 (.039)	WHITE	WHITE	ORANGE	1000

ORDER INFORMATION

KLS8-01108 - E0206

- E0206 — Item NO.
- KLS8-01108 — Pipe pre-insulation terminal Series
- KLS8-01108 - E0206 — Part Number

Terminals Series

KLS8-01108 Pipe pre-insulation terminal Series

WIRE RANGE mm2 (A.W.G.)	ITEM NO.	DIMENSION mm(inch)						FRENCH COLOR	DIN COLOR	GERMAN COLOR	Q'TY BOX
		W	F	L	D	B	C				
0.75 (20)	E7506	2.8 (.110)	6.0 (.236)	12.3 (.484)	1.5 (.059)	6.3 (.248)	1.2 (.047)	BLUE	GREY	WHITE	1000
	E7508	2.8 (.110)	8.0 (.315)	14.3 (.563)	1.5 (.059)	6.3 (.248)	1.2 (.047)	BLUE	GREY	WHITE	1000
	E7508-L	3.0 (.118)	8.0 (.315)	14.5 (.571)	1.5 (.059)	6.5 (.256)	1.2 (.047)	BLUE	GREY	WHITE	1000
	E7510	2.8 (.110)	10.0 (.394)	16.3 (.642)	1.5 (.059)	6.3 (.248)	1.2 (.047)	BLUE	GREY	WHITE	1000
	E7512	2.8 (.110)	12.0 (.472)	18.3 (.720)	1.5 (.059)	6.3 (.248)	1.2 (.047)	BLUE	GREY	WHITE	1000
	E7518	2.8 (.110)	18.0 (.709)	24.3 (.957)	1.5 (.059)	6.3 (.248)	1.2 (.047)	BLUE	GREY	WHITE	1000
1.0 (18)	E1006	3.0 (.118)	6.0 (.236)	12.3 (.484)	1.7 (.067)	6.3 (.248)	1.4 (.055)	RED	RED	YELLOW	1000
	E1008	3.0 (.118)	8.0 (.315)	14.3 (.563)	1.7 (.067)	6.3 (.248)	1.4 (.055)	RED	RED	YELLOW	1000
	E1008-L	3.3 (.130)	8.0 (.315)	14.5 (.571)	1.7 (.067)	6.5 (.256)	1.4 (.055)	RED	RED	YELLOW	1000
	E1010	3.0 (.118)	10.0 (.394)	16.3 (.642)	1.7 (.067)	6.3 (.248)	1.4 (.055)	RED	RED	YELLOW	1000
	E1012	3.0 (.118)	12.0 (.472)	18.3 (.720)	1.7 (.067)	6.3 (.248)	1.4 (.055)	RED	RED	YELLOW	1000
	E1012-L	3.3 (.130)	12.0 (.472)	18.5 (.728)	1.7 (.067)	6.5 (.256)	1.4 (.055)	RED	RED	YELLOW	1000
	E1018	3.0 (.118)	18.0 (.709)	24.3 (.957)	1.7 (.067)	6.3 (.248)	1.4 (.055)	RED	RED	YELLOW	1000
1.5 (16)	E1508	3.5 (.138)	8.0 (.315)	14.3 (.563)	2.0 (.079)	6.3 (.248)	1.7 (.067)	BLACK	BLACK	RED	1000
	E1508-L	3.8 (.150)	8.0 (.315)	14.5 (.571)	2.0 (.080)	6.5 (.256)	1.7 (.068)	BLACK	BLACK	RED	1000
	E1510	3.5 (.138)	10.0 (.394)	16.36 (.642)	2.0 (.081)	6.3 (.248)	1.7 (.069)	BLACK	BLACK	RED	1000
	E1512	3.5 (.138)	12.0 (.472)	18.3 (.720)	2.0 (.082)	6.3 (.248)	1.7 (.070)	BLACK	BLACK	RED	1000
	E1515	3.5 (.138)	15.0 (.591)	21.3 (.839)	2.0 (.083)	6.3 (.248)	1.7 (.071)	BLACK	BLACK	RED	1000
	E1518	3.5 (.138)	18.0 (.709)	24.3 (.957)	2.0 (.084)	6.3 (.248)	1.7 (.072)	BLACK	BLACK	RED	1000

ORDER INFORMATION

KLS8-01108 - E0206

- E0206: Item NO.
- KLS8-01108: Pipe pre-insulation terminal Series
- KLS: Part Number

Terminals Series

KLS8-01108 Pipe pre-insulation terminal Series

WIRE RANGE mm2 (A. W. G.)	ITEM NO.	DIMENSION mm(inch)						FRENCH COLOR	DIN COLOR	GERMAN COLOR	Q' TY BOX
		W	F	L	D	B	C				
2. 5 (14)	E2508	4. 0 (. 157)	8. 0 (. 315)	15. 4 (. 606)	2. 6 (. 102)	7. 4 (. 291)	2. 3 (. 091)	GREY	BLUE	BLUE	1000
	E2510	4. 0 (. 157)	10. 0 (. 394)	17. 4 (. 685)	2. 6 (. 102)	7. 4 (. 291)	2. 3 (. 091)	GREY	BLUE	BLUE	1000
	E2512	4. 0 (. 157)	12. 0 (. 472)	19. 4 (. 764)	2. 6 (. 102)	7. 4 (. 291)	2. 3 (. 091)	GREY	BLUE	BLUE	1000
	E2518	4. 0 (. 157)	18. 0 (. 709)	25. 4 (1. 000)	2. 6 (. 102)	7. 4 (. 291)	2. 3 (. 091)	GREY	BLUE	BLUE	1000
	E2525	4. 0 (. 157)	25. 0 (. 984)	32. 4 (1. 276)	2. 6 (. 102)	7. 4 (. 291)	2. 3 (. 091)	GREY	BLUE	BLUE	1000
4. 0 (12)	E4009	4. 5 (. 117)	9. 0 (. 354)	16. 4 (. 646)	3. 2 (. 126)	7. 4 (. 291)	2. 8 (. 110)	ORANGE	GREY	GREY	1000
	E4010	4. 5 (. 117)	10. 0 (. 394)	17. 4 (. 685)	3. 2 (. 126)	7. 4 (. 291)	2. 8 (. 110)	ORANGE	GREY	GREY	1000
	E4012	4. 5 (. 117)	12. 0 (. 472)	19. 4 (. 764)	3. 2 (. 126)	7. 4 (. 291)	2. 8 (. 110)	ORANGE	GREY	GREY	1000
	E4018	4. 5 (. 117)	18. 0 (. 709)	25. 4 (1. 000)	3. 2 (. 126)	7. 4 (. 291)	2. 8 (. 110)	ORANGE	GREY	GREY	1000
6. 0 (10)	E6012	6. 0 (. 236)	12. 0 (. 472)	20. 5 (. 807)	3. 9 (. 154)	8. 5 (. 338)	3. 5 (. 138)	GREEN	YELLOW	BLACK	1000
	E6018	6. 0 (. 236)	18. 0 (. 709)	26. 5 (1. 403)	3. 9 (. 154)	8. 5 (. 338)	3. 5 (. 138)	GREEN	YELLOW	BLACK	1000
10 (8)	E10-12	7. 5 (. 295)	12. 0 (. 472)	20. 8 (. 819)	4. 9 (. 193)	8. 8 (. 346)	4. 5 (. 177)	GREEN	YELLOW	BLACK	1000
	E10-18	7. 5 (. 295)	18. 0 (. 709)	26. 8 (1. 055)	4. 9 (. 193)	8. 8 (. 346)	4. 5 (. 177)	GREEN	YELLOW	BLACK	1000
16 (6)	E16-12	8. 7 (. 343)	12. 0 (. 472)	22. 0 (. 866)	6. 2 (. 244)	10. 0 (. 394)	5. 8 (. 228)	GREEN	YELLOW	BLACK	500
	E16-18	8. 7 (. 343)	18. 0 (. 709)	28. 0 (1. 102)	6. 2 (. 244)	10. 0 (. 394)	5. 8 (. 228)	GREEN	YELLOW	BLACK	500
25 (4)	E25-12	11. 0 (. 433)	12. 0 (. 472)	24. 0 (. 945)	7. 9 (. 311)	12. 0 (. 472)	7. 5 (. 295)	BLACK	YELLOW	BROWN	250
	E25-15	11. 0 (. 433)	15. 0 (. 591)	27. 0 (1. 063)	7. 9 (. 311)	12. 0 (. 472)	7. 5 (. 295)	BLACK	YELLOW	BROWN	250
	E25-16	11. 0 (. 433)	16. 0 (. 630)	28. 0 (1. 102)	7. 9 (. 311)	12. 0 (. 472)	7. 5 (. 295)	BLACK	YELLOW	BROWN	250
	E25-18	11. 0 (. 433)	18. 0 (. 709)	30. 0 (1. 181)	7. 9 (. 311)	12. 0 (. 472)	7. 5 (. 295)	BLACK	YELLOW	BROWN	250
	E25-22	11. 0 (. 433)	22. 0 (. 886)	34. 0 (1. 339)	7. 9 (. 311)	12. 0 (. 472)	7. 5 (. 295)	BLACK	YELLOW	BROWN	250

ORDER INFORMATION

KLS8-01108 - E0206

- E0206 — Item NO.
- KLS8-01108 — Pipe pre-insulation terminal Series
- KLS8-01108 - E0206 — Part Number

Terminals Series

KLS8-01108 Pipe pre-insulation terminal Series

WIRE RANGE mm2 (A.W.G.)	ITEM NO.	DIMENSION mm(inch)						FRENCH COLOR	DIN COLOR	GERMAN COLOR	Q'TY BOX
		W	F	L	D	B	C				
35 (2)	E35-16	12.5 (.492)	16.0 (.630)	30.0 (1.181)	8.7 (.343)	14.0 (.551)	8.3 (.327)	RED	RED	BEIGE	250
	E35-18	12.5 (.492)	18.0 (.709)	32.0 (1.260)	8.7 (.343)	14.0 (.551)	8.3 (.327)	RED	RED	BEIGE	250
	E35-22	12.5 (.492)	22.0 (.886)	36.0 (1.147)	8.7 (.343)	14.0 (.551)	8.3 (.327)	RED	RED	BEIGE	250
	E35-25	12.5 (.492)	25.0 (.984)	39.0 (1.535)	8.7 (.343)	14.0 (.551)	8.3 (.327)	RED	RED	BEIGE	250
50 (1/0)	E50-12	15.0 (.591)	12.0 (.472)	28.0 (1.102)	10.9 (.429)	16.0 (.630)	10.3 (.406)	BLUE	BLUE	OLIVE	250
	E50-20	15.0 (.591)	20.0 (.787)	36.0 (1.147)	10.9 (.429)	16.0 (.630)	10.3 (.406)	BLUE	BLUE	OLIVE	250
	E50-25	15.0 (.591)	25.0 (.984)	41.0 (1.614)	10.9 (.429)	16.0 (.630)	10.3 (.406)	BLUE	BLUE	OLIVE	250
70 (2/0)	E70-20	16.0 (.630)	20.0 (.787)	37.0 (1.457)	14.3 (.563)	17.0 (.669)	13.5 (.531)	YELLOW	YELLOW	YELLOW	100
	E70-25	16.0 (.630)	25.0 (.984)	42.0 (1.654)	14.3 (.563)	17.0 (.669)	13.5 (.531)	YELLOW	YELLOW	YELLOW	100
	E70-27	16.0 (.630)	27.0 (1.063)	44.0 (1.732)	14.3 (.563)	17.0 (.669)	13.5 (.531)	YELLOW	YELLOW	YELLOW	100
95 (3/0)	E95-25	18.5 (.728)	25.0 (.984)	44.0 (1.732)	15.6 (.614)	19.0 (.748)	14.8 (.583)	RED	RED	RED	100
120 (4/0)	E120-27	20.3 (.799)	27.0 (1.063)	47.6 (1.874)	17.7 (.697)	20.6 (.811)	16.7 (.657)	BLUE	BLUE	BLUE	50
	E120-32	20.3 (.799)	32.0 (1.260)	52.6 (2.071)	17.7 (.697)	20.6 (.811)	16.7 (.657)	BLUE	BLUE	BLUE	50
150 (250/300MCM)	E150-25	23.4 (.921)	25.0 (.984)	50.6 (1.992)	20.6 (.811)	25.6 (1.008)	19.6 (.772)	YELLOW	YELLOW	YELLOW	50
	E150-27	23.4 (.921)	27.0 (1.063)	52.6 (2.071)	20.6 (.811)	25.6 (1.008)	19.6 (.772)	YELLOW	YELLOW	YELLOW	50
	E150-32	23.4 (.921)	32.0 (1.260)	57.6 (2.268)	20.6 (.811)	25.6 (1.008)	19.6 (.772)	YELLOW	YELLOW	YELLOW	50

ORDER INFORMATION

KLS8-01108 - E0206

- E0206: Item NO.
- KLS8-01108: Pipe pre-insulation terminal Series
- KLS8: Part Number

Terminals Series

KLS8-01141 Double line and pipe shape pre-insulation terminal Series

Maximum Electrical Rating: 105°C 300 Volts MAX.
Insulation Material: VINYL And NYLON
Terminal Material: COPPER

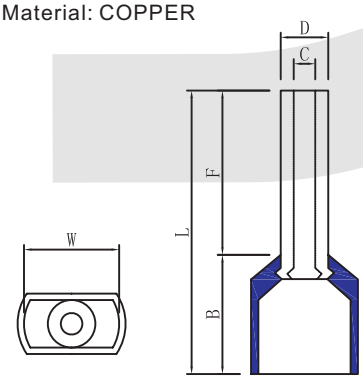



Model No.	Wire Range mm²/Awg	Dimension(mm/inch)						COLOR SYSTEM			Q'TY BOX PCS
		F	L	W	B	D	C	DIN	GERMAN	FRENCH	
TE0508	2*0.5mm² 2*22AWG	8.0 (.315)	15.0 (.590)	5.0 (.197)	7.0 (.275)	1.8 (.071)	1.5 (.059)	White	Orange	White	1000
TE7508	2*0.75mm² 2*20AWG	8.0 (.315)	15.0 (.590)	5.5 (.217)	7.0 (.275)	2.1 (.083)	1.8 (.071)	Gray	White	Blue	1000
TE7510	2*0.75mm² 2*20AWG	10.0 (.394)	17.0 (.669)	5.5 (.217)	7.0 (.275)	2.1 (.083)	1.8 (.071)	Gray	White	Blue	1000
TE1008	2*1.0mm² 2*18AWG	8.0 (.315)	15.0 (.590)	5.5 (.218)	7.0 (.275)	2.3 (.091)	2.0 (.079)	Red	Yellow	Red	1000
TE1010	2*1.0mm² 2*18AWG	10.0 (.394)	17.0 (.669)	5.5 (.218)	7.0 (.275)	2.3 (.091)	2.0 (.079)	Red	Yellow	Red	1000
TE1508	2*1.5mm² 2*16AWG	8.0 (.315)	16.0 (.629)	6.4 (.252)	8.0 (.314)	2.6 (.102)	2.3 (.091)	Black	Red	Black	1000
TE1512	2*1.5mm² 2*16AWG	12.0 (.472)	20.0 (.787)	6.4 (.252)	8.0 (.314)	2.6 (.102)	2.3 (.091)	Black	Red	Black	1000
TE2510	2*2.5mm² 2*14AWG	10.0 (.394)	18.5 (.728)	8.0 (.315)	8.5 (.334)	3.3 (.130)	2.9 (.114)	Blue	Blue	Gray	1000
TE2513	2*2.5mm² 2*14AWG	13.0 (.512)	21.5 (.864)	8.0 (.315)	8.5 (.334)	3.3 (.130)	2.9 (.114)	Blue	Blue	Gray	1000
TE4012	2*4.0mm² 2*4AWG	12.0 (.472)	23.0 (.905)	8.8 (.346)	11.0 (.433)	4.2 (.165)	3.8 (.150)	Gray	Gray	Orange	500
TE6014	2*6.0mm² 2*10AWG	14.0 (.551)	26.0 (1.023)	9.5 (.374)	12.0 (.472)	5.3 (.209)	4.9 (.193)	Yellow	Black	Green	500
TE10-14	2*10.0mm² 2*8AWG	14.0 (.551)	26.5 (1.043)	12.6 (.496)	12.5 (.492)	6.9 (.272)	6.5 (.256)	Red	Ivory	Brwon	200
TE16-14	2*16.0mm² 2*6AWG	14.0 (.551)	31.5 (1.240)	19.0 (.748)	17.5 (.688)	8.7 (.343)	8.3 (.327)	Blue	Green	Ivory	200

ORDER INFORMATION

KLS8-01141 - TE0508

- TE0508 — Item NO.
- KLS8-01141 — Double line and pipe shape pre-insulation terminal Series
- KLS8-01141 - TE0508 — Part Number

Terminals Series

KLS8-01114 Short full insulation middle terminal Series

Maximum Electrical Rating: 105°C 600 Volts MAX.
Insulation Material: VINYL And NYLON
Connector Material: COPPER

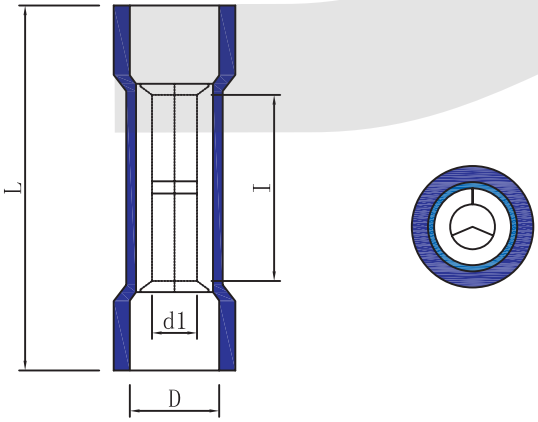



Item No.	Section of lead		Dimension			I max	Color
	AWG	mm2	I	d1 / D	L		
			mm	mm	mm		
BV1.25	22~16 AWG	0.5~1.5	15.0	1.7/4.0	26.0	19A	Red
BV2	16~14 AWG	1.5~2.5	15.0	2.3/4.5	26.0	27A	Blue
BV5.5	12~10 AWG	4~6	15.0	3.4/6.3	26.0	48A	Yellow
BV8	8 AWG	8	21	4.5/8.5	32	62A	Red
BV14	6 AWG	14	26	5.8/10.5	42	88A	Blue
BV22	4 AWG	22	29	7.7/12.4	50	115A	Yellow
BV38	2 AWG	38	32	9.5/15.5	55	160A	Red

ORDER INFORMATION

KLS8-01114 - BV1.25

- BV1.25 — Item NO.
- KLS8-01114 — Short full insulation middle terminal Series
- KLS8 — Part Number

Terminals Series

KLS8-01115 Father pre-insulation terminal Series

Maximum Electrical Rating: 75°C 300 Volts MAX.
Insulation Material: VINYL
Terminal Material: BRASS

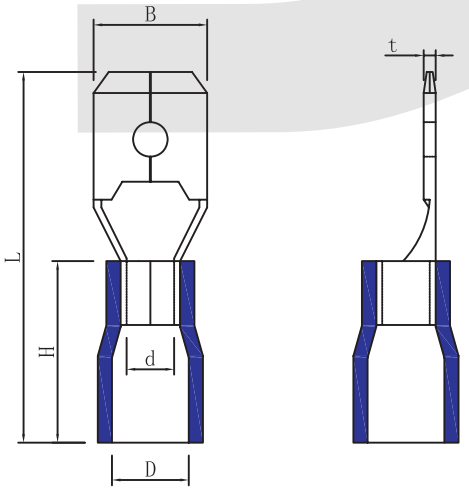



Item No.	Section of lead	Nema tab	Thickness of material: t	Dimension					COLOR
				B	d	D	L	H	
		mm	mm	mm	mm	mm	mm	mm	
MDD1.25-110(8)	0.5~1.5mm² (22~16A.W.G.) I Max=10A	0.8*2.8	0.8	2.8	1.70	4.3	17.7	10.0	Red
MDD1.25-187(5)		0.5*4.75	0.5	4.75	1.70	4.3	20.0		
MDD1.25-187(8)		0.8*4.75	0.8	4.75	1.70	4.3	18.5		
MDD1.25-250		0.8*6.35	0.4	6.35	1.70	4.3	21.0		
MDD2-187(5)	1.5~2.5mm² (16~14A.W.G.) I Max=15A	0.5*4.75	0.5	4.75	2.3	4.3	20.0	14.0	Blue
MDD2-187(8)		0.8*4.75	0.8	4.75	2.3	4.3	18.5		
MDD2-250		0.8*6.35	0.4	6.35	2.3	4.3	21.0		
MDD5.5-250	4~6mm² (12~10A.W.G.) I Max=24A	0.8*6.35	0.4	6.35	3.4	5.7	25.0	14	Yellow

ORDER INFORMATION

KLS8-01115 - MDD1.25-110(8)

- MDD1.25-110(8): Item No.
- KLS8-01115: Father pre-insulation terminal Series
- KLS8: Part Number

Terminals Series

KLS8-01106 Female pre-insulating Terminals Series

Maximum Electrical Rating: 75°C 300 Volts Max.
Insulation Material: Vinyl
Terminal Material: Brass

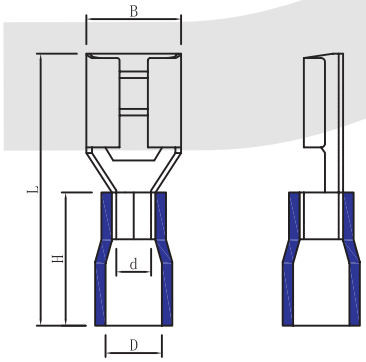



Item No.	Conductor cross-section	Nema tab	Thickness of material:T	Dimension					Color
				B	d	D	L	H	
		mm	mm	mm	mm	mm	mm	mm	
FDD1.25-110(5)	0.5~1.5mm² (22~16A.W.G.) I Max=10A	0.5*2.8	0.3	3.8	1.7	3.8	19	10	Red
FDD1.25-110(8)		0.8*2.8	0.3	3.8	1.7	3.8	19		
FDD1.25-187(5)		0.5*4.75	0.35	5.6	1.7	3.8	19		
FDD1.25-187(8)		0.8*4.75	0.35	5.6	1.7	3.8	19		
FDD1.25-205		0.5*5.2	0.35	6.5	1.7	3.8	20		
FDD1.25-250		0.8*6.35	0.4	7.4	1.7	3.8	21		
FDD2-110(5)	1.5~2.5mm² (16~14A.W.G.) I Max=15A	0.5*2.8	0.3	3.8	2.3	4.3	19.0	10	Blue
FDD2-110(8)		0.8*2.8	0.3	3.8	2.3	4.3	19.0		
FDD2-187(5)		0.5*4.75	0.35	5.6	2.3	4.3	19.0		
FDD2-187(8)		0.5*4.75	0.35	5.6	2.3	4.3	19.0		
FDD2-205		0.8*5.2	0.35	6.4	2.3	4.3	20.0		
FDD2-250		0.8*0.8	0.4	7.4	2.3	4.3	21		
FDD2-312		0.8*0.8	0.4	9	2.3	4.3	23.0		
FDD5.5-250	4~6mm² (12~10A.W.G.) I Max=24A	0.5*6.35	0.4	7.4	3.4	5.7	25.0	14	Yellow
FDD5.5-375		1.2*9.4	0.5	10.9	3.4	5.7	29.6		

ORDER INFORMATION

KLS8-01106 - FDD1.25 - 110(5)

- Item NO.
- Female pre-insulating Terminals Series
- Part Number

Terminals Series

KLS8-01118 Locked Terminal Series

Terminal Material: Brass



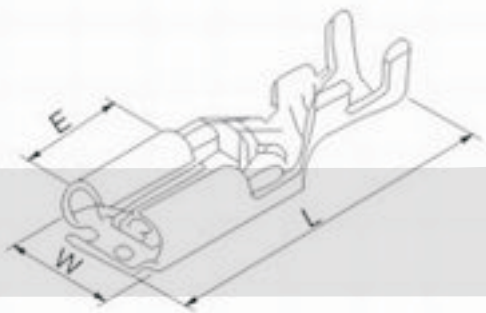

Item No.	Treatment	Material	T mm	Dimension (mm)			Wire range AWG
				W	L	D	
FT-110	Tin-plate	Brass	0.25	3.8	6.3	15.6	18~22
FT-187A			0.5	5.6	5.9	15.5	20~24
FT-187B			0.5	5.6	5.9	15.5	16~20
FT-205			0.3	6.3	0.5	15.5	16~20
FT-250			0.4	7.5	7.5	19.0	16~20

ORDER INFORMATION

KLS8-01118 - FT-110

- FT-110: Item No.
- KLS8-01118: Terminal Series
- KLS8-01118 - FT-110: Part Number

Terminals Series

KLS8-01119 Terminal Series

Terminal Material: Brass

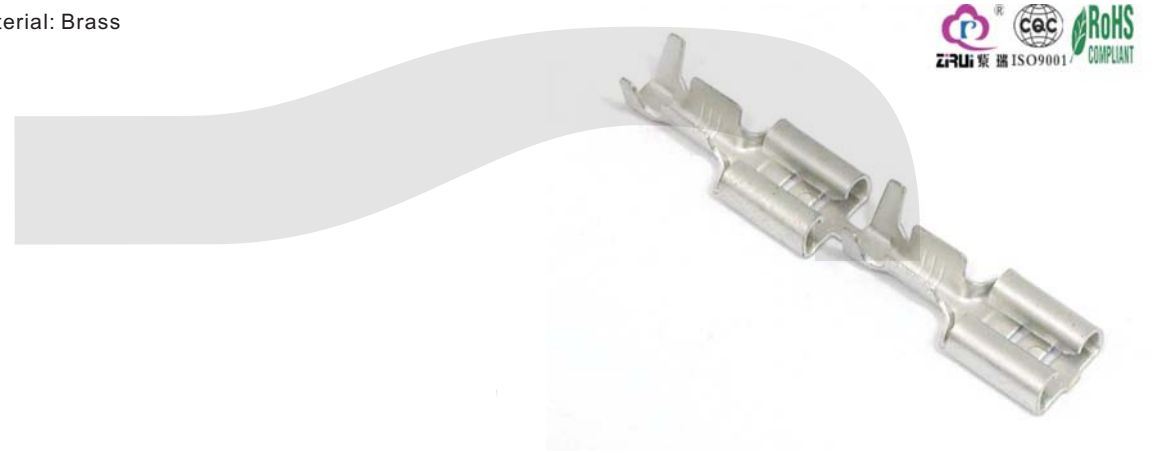

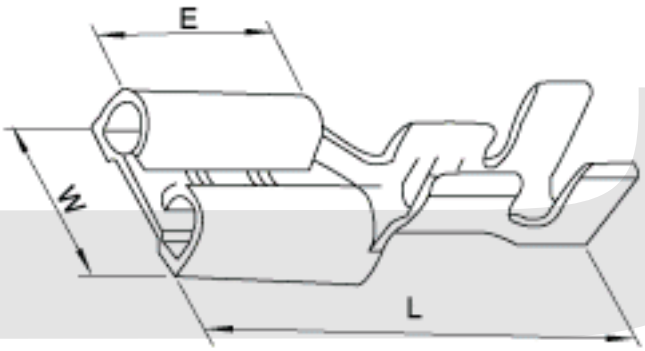

Item No.	Treatment	Material	T mm	Dimension (mm)			Wire range AWG
				W	L	D	
FT-110	Tin-plate	Brass	0.25	3.8	6.3	15.6	18~22
FT-187A			0.5	5.6	5.9	15.5	20~24
FT-187B			0.5	5.6	5.9	15.5	16~20
FT-205			0.3	6.3	0.5	15.5	16~20
FT-250			0.4	7.5	7.5	19.0	16~20

ORDER INFORMATION

KLS8-01119 - FT-110

- FT-110: Item No.
- KLS8-01119: Terminal Series
- KLS8: Part Number

Terminals Series

KLS8-01121 Terminal Series



Terminal Material: Brass

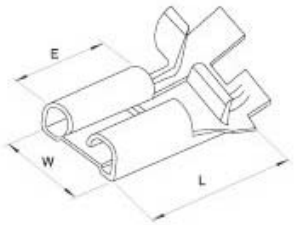

單位：mm

型 號 Item No.	表面處理 Treatment	材質 Material	板厚 T (mm)	尺寸Dimension (mm) W	E	L	通用電綫 Wire range (AWG#)	數量 Q'TY (Reel)
FT-110	鍍錫	黃銅	0.3	3.8	5.5	11.7	22-26	
FT-187	鍍錫	黃銅	0.4	5.6	5.9	14	16-20	
FT-250	鍍錫	黃銅	0.4	7.6	6.0	14.2	16-20	

KLS8-01122 Terminal Series



Terminal Material: Brass

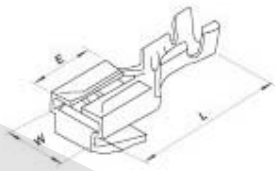

單位：mm

型 號 Item No.	表面處理 Treatment	材質 Material	板厚 T (mm)	尺寸Dimension (mm) W	E	L	通用電綫 Wire range (AWG#)	數量 Q'TY (Reel)
FT-187-3	鍍錫	黃銅	0.5	5.9	6.2	15.0	16-20	2000
FT-250-3	鍍錫	黃銅	0.4	7.6	8.0	19.6	16-20	

ORDER INFORMATION

KLS8-01121 - FT-110

- FT-110: Item No.
- KLS8-01121: Terminal Series
- KLS8-01121 - FT-110: Part Number

Terminals Series

KLS8-01110 Shoule shaped male and female pre-insulating terminal Series

Maximum Electrical Rating: 75°C 300 Volts MAX.
Insulation Material: VINYL
Terminal Material: BRASS

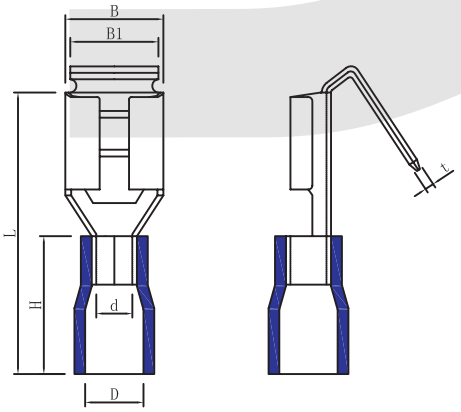



Item No.	Section of lead	Nema tab	Dimension						COLOR
			B	B1	H	D	d	L	
		mm	mm	mm	mm	mm	mm	mm	
FBFD1.25-250	0.5~1.5mm² (22~16A.W.G.) I Max=10A	0.8*6.35	7.4	6.3	10.0	3.8	1.7	21.5	RED
FBFD2-250	1.5~2.5mm² (16~14A.W.G.) I Max=15A	0.8*6.35	7.4	6.3	10.0	4.3	2.3	21.5	BLUE
FBFD5.5-250	4~6mm² (12~10A.W.G.) I Max=24A	0.8*6.35	7.4	6.3	14.0	5.7	3.4	25.0	YELLOW

ORDER INFORMATION

KLS8-01110 - FBFD1.25-250

- FBFD1.25-250 — Item NO.
- KLS8-01110 — Shoule shaped male and female pre-insulating terminal Series
- KLS8 — Part Number

Terminals Series

KLS8-01121 Terminal Series



Terminal Material: Brass

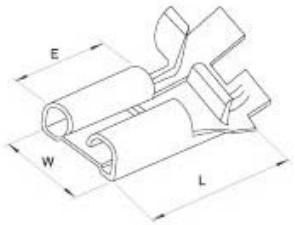

單位：mm

型 號 Item No.	表面處理 Treatment	材質 Material	板厚 T (mm)	尺寸Dimension (mm) W	E	L	通用電綫 Wire range (AWG#)	數量 Q'TY (Reel)
FT-110	鍍錫	黃銅	0.3	3.8	5.5	11.7	22-26	
FT-187	鍍錫	黃銅	0.4	5.6	5.9	14	16-20	
FT-250	鍍錫	黃銅	0.4	7.6	6.0	14.2	16-20	

KLS8-01122 Terminal Series



Terminal Material: Brass

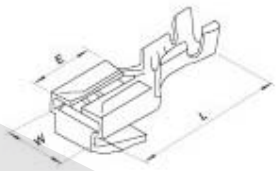

單位：mm

型 號 Item No.	表面處理 Treatment	材質 Material	板厚 T (mm)	尺寸Dimension (mm) W	E	L	通用電綫 Wire range (AWG#)	數量 Q'TY (Reel)
FT-187-3	鍍錫	黃銅	0.5	5.9	6.2	15.0	16-20	2000
FT-250-3	鍍錫	黃銅	0.4	7.6	8.0	19.6	16-20	

ORDER INFORMATION

KLS8-01121 - FT-110

- FT-110: Item No.
- KLS8-01121: Terminal Series
- KLS8-01121 - FT-110: Part Number

Terminals Series

KLS8-01134 Piece pre-insulation terminal Series

Maximum Electrical Rating: 105°C 600 Volts MAX.
Insulation Material: VINYL
Terminal Material: COPPER

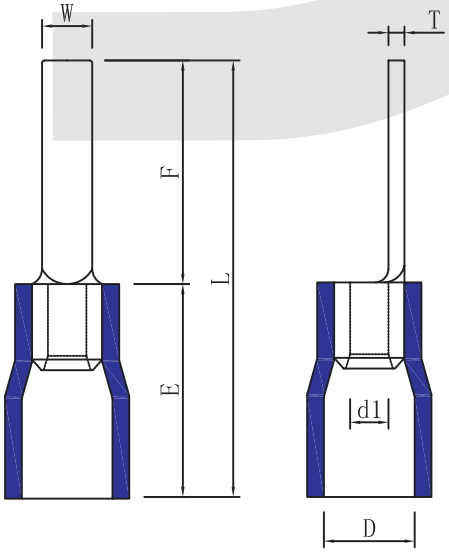



Item No.	Section of lead	Dimension					COLOR
		T	W	L	F	D/d1	
		mm	mm	mm	mm	mm	
DBV1.25-10	0.5~1.5mm² (22~16A.W.G.) I Max=19A	0.75	2.3	20.0	10.0	4.3/1.7	RED
DBV1.25-11			3.0	21.0	14.0	4.3/1.7	
DBV1.25-14			3.0	24.0	14.0	4.3/1.7	
DBV1.25-18			2.3	28.0	18.0	4.3/1.7	
DBV2-9	1.5~2.5mm² (16~14A.W.G.) I Max=27A	0.8	2.8	19.0	9.0	4.9/2.3	BLUE
DBV2-18			2.3	28.0	18.0	4.9/2.3	
DBV5.5-10	4~6mm² (12~10A.W.G.) I Max=48A	1.0	2.8	22.5	10.0	5.6/3.4	YELLOW
DBV5.5-14			4.5	27.0	14.0	5.6/3.4	
DBV5.5-18			4.5	31.0	18.0	5.6/3.4	

ORDER INFORMATION

KLS8-01134 - DBV1.25-10

- DBV1.25-10 — Item No.
- KLS8-01134 — Piece pre-insulation terminal Series
- KLS8-01134 - DBV1.25-10 — Part Number

Terminals Series

KLS8-01111Bullet male pre-insulation terminal Series

Maximum Electrical Rating: 75°C 600 Volts MAX.
Insulation Material: VINYL
Terminal Material: BRASS

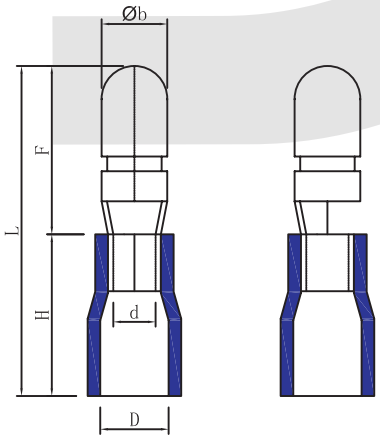



Item No.	Section of lead	Thickness of materlal mm	Dimension						COLOR
			b	F	D	d	H	L	
			mm	mm	mm	mm	mm	mm	
MPD1.25-156	0.5~1.5mm² (22~16A.W.G.) I Max=10A	0.4	4.0	11.0	2.7	1.7	10.0	21.0	RED
MPD2-156	1.5~2.5mm² (16~14A.W.G.) I Max=15A	0.4	4.0	16.0	2.7	1.7	10.0	21.0	BLUE
MPD2-195		0.4	5.0	16.0	2.7	1.7	10.0	21.0	
MPD5.5-195	4~6mm² (12~10A.W.G.) I Max=24A	0.4	4.0	11.0	4.5	3.4	14.0	25.0	YELLOW

ORDER INFORMATION

KLS8-01111 - MPD1.25-156

- Item NO.
- Bullet father pre-insulation terminal Series
- Part Number

Terminals Series

KLS8-01112 Bullet female full insulation terminal Series

Maximum Electrical Rating: 75°C 600 Volts MAX.
Insulation Material: VINYL
Terminal Material: BRASS

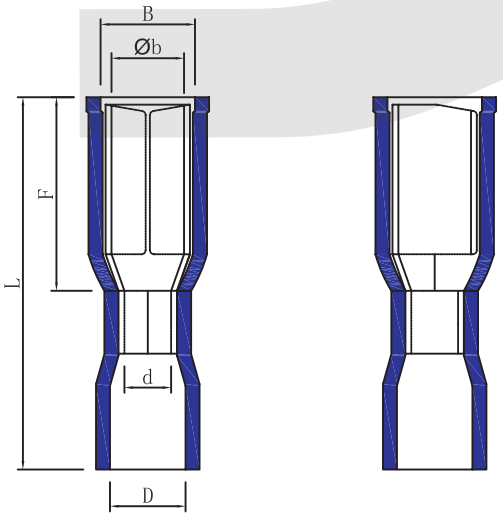



Item No.	Section of lead	Thickness of materlal mm	Dimension						COLOR
			b	F	D	d	H	L	
			mm	mm	mm	mm	mm	mm	
FRD1.25-156	0.5~1.5mm² (22~16A.W.G.) I Max=10A	0.4	4.0	16.0	2.7	1.7	13.0	24.5	RED
FRD2-156	1.5~2.5mm² (16~14A.W.G.) I Max=15A	0.4	4.0	6.3	3.3	2.3	14.0	24.5	BLUE
FRD2-195		0.4	5.0	7.0	3.3	2.3	14.0	24.5	
FRD5.5-195	4~6mm² (12~10A.W.G.) I Max=24A	0.4	5.0	7.0	4.5	3.4	14.0	25.0	YELLOW

ORDER INFORMATION

KLS8-01112 - FRD1.25-156

- FRD1.25-156 — Item NO.
- KLS8-01112 — Bullet mother full insulation terminal Series
- KLS — Part Number

Terminals Series

KLS8-01113 Needle pre-insulation terminal Series

Maximum Electrical Rating: 105°C 600 Volts MAX.
Insulation Material: VINYL
Terminal Material: COPPER

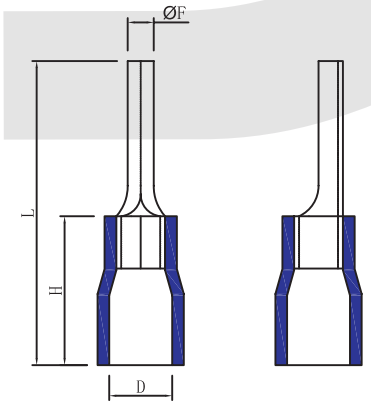



Item No.	Section of lead	Dimension				COLOR
		F	L	H	D	
		mm	mm	mm	mm	
PTV1.25-9	0.5~1.5mm² (22~16A.W.G.) I Max=19A	1.9	19	10	4.3	RED
PTV1.25-10		1.9	20.0			
PTV1.25-12		1.9	22.0			
PTV1.25-13		1.9	23.0			
PTV2-9	1.5~2.5mm² (16~14A.W.G.) I Max=27A	1.9	19	10	4.9	BLUE
PTV2-10		1.9	20.0			
PTV2-12		1.9	22.0			
PTV2-13		1.9	23.0			
PTV5.5-13	4~6mm² (12~10A.W.G.) I Max=48A	2.8	26	12.5	6.7	YELLOW

ORDER INFORMATION

KLS8-01113 - PTV1.25-9

- PTV1.25-9 — Item NO.
- KLS8-01113 — Needle pre-insulation terminal Series
- KLS8-01113 - PTV1.25-9 — Part Number

Terminals Series

KLS8-01222 Flag female insulating joint Series

1.Maximum Electrical Rating: 300 VOLTS
2.Maximum Temperature: 105 °C
3.Terminal Material: BRASS
4.Plating: ELECTRO TIN PLATED
5.Insulation Material: NYLON

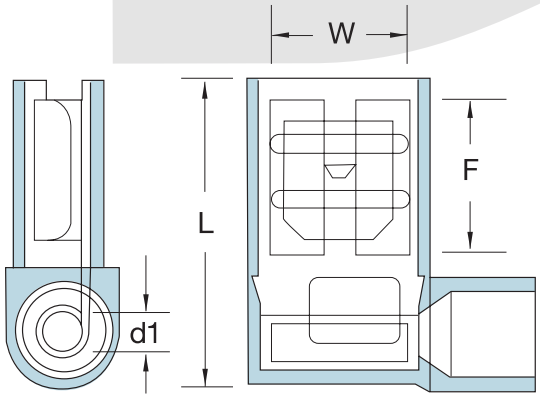



WIRE RANGE mm^2 (A.W.G.)	NEMATAB mm(inch)	ITEM NO.	DIMENSION mm(inch)					Q'TY BOX
			W	F	L	d1	T	
0.5-1.5 (22-16)	6.35*0.8 .250*.032	FLDNY1-250	6.6 (.260)	7.6 (.299)	16.0 (.630)	1.7 (.067)	0.4 (.016)	1000
1.5-2.5 (16-14)	6.35*0.8 .250*.032	FLDNY2-250	6.6 (.260)	7.6 (.299)	16.0 (.630)	2.3 (.091)	0.4 (.016)	1000
4-6 (12-10)	6.35*0.8 .250*.032	FLDNY5-250	6.6 (.260)	7.6 (.299)	16.5 (.650)	3.4 (.134)	0.4 (.016)	500

ORDER INFORMATION

KLS8-01222 - FLDNY1-250

- FLDNY1-250 — Item No.
- KLS8-01222 — Flag female insulating joint Series
- KLS8-01222-FLDNY1-250 — Part Number

Terminals Series

KLS8-01128 Terminal Series

Terminal Material: Brass

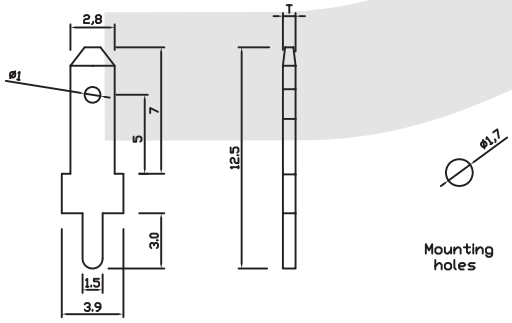



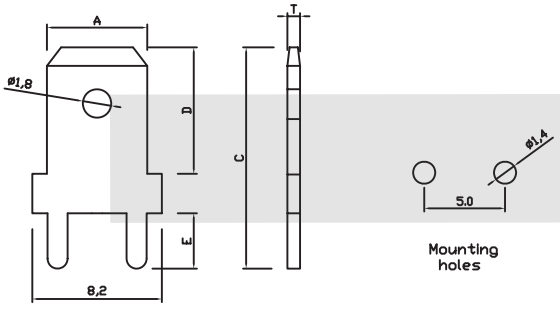

Model No.	A	T	C	D	E	packing
PC-110	2.8	0.5	12.5	7	3	1000
PC-187	4.8	0.5 0.8	13	6.4	3.4	
PC-250	6.35	0.8	16.1	8	4	

ORDER INFORMATION

KLS8-01128 -PC-110-0.5

- Item No.
- Terminal Series
- Part Number

Terminals Series

KLS8-01129-PC-250C Terminal Series

Terminal Material: Brass



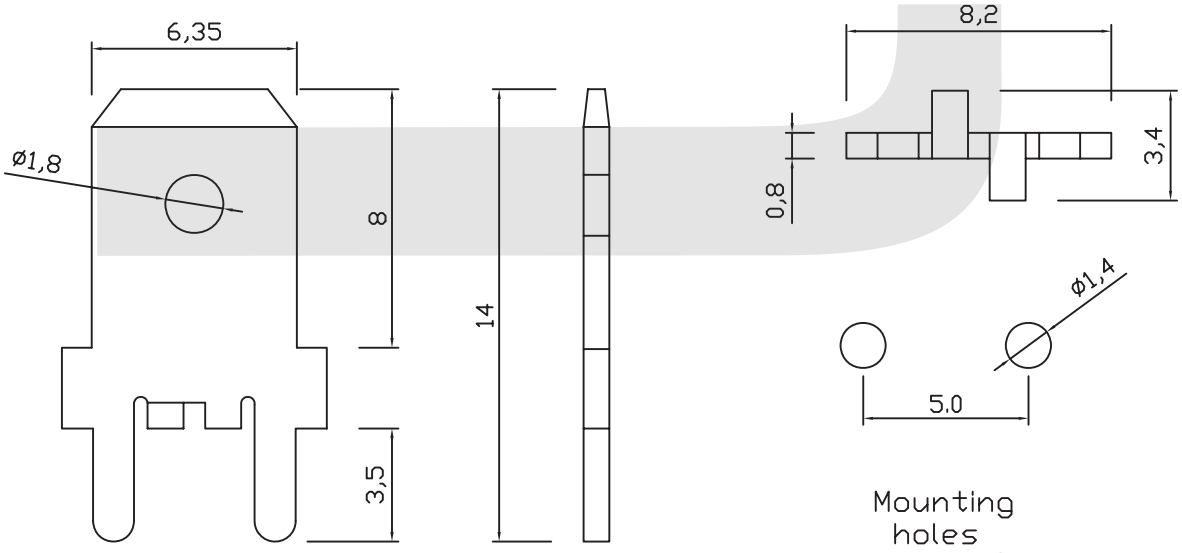

ORDER INFORMATION

KLS8-01129 -PC-250C

- Item No.
- Terminal Series
- Part Number

Terminals Series

KLS8-01130 Terminal Series

Terminal Material: Brass



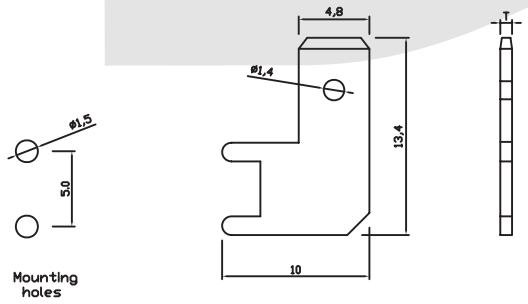

PCF-187

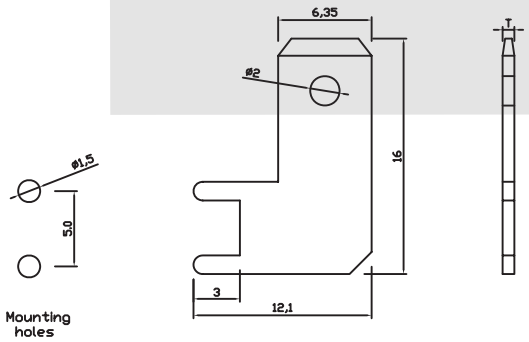

PCF-250

Model No.	T	packing
PCF-187(5)	0.5	1000
PCF-187	0.8	
PCF-250	0.8	

ORDER INFORMATION

KLS8-01129 -PCF-187(5)

- Item No.
- Terminal Series
- Part Number

Terminals Series

KLS8-01131B-250 Terminal Series

Terminal Material: Brass
Packing:1000pcs



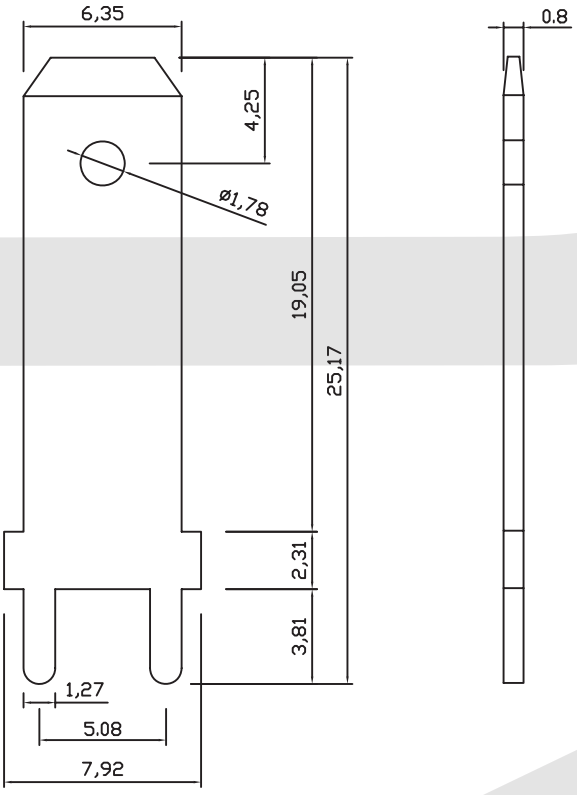

ORDER INFORMATION

KLS8-01131B - PC-250

- Item No.
- Terminal Series
- Part Number

Terminals Series

KLS8-01144 PC Board terminal Series

Terminal Material: Brass



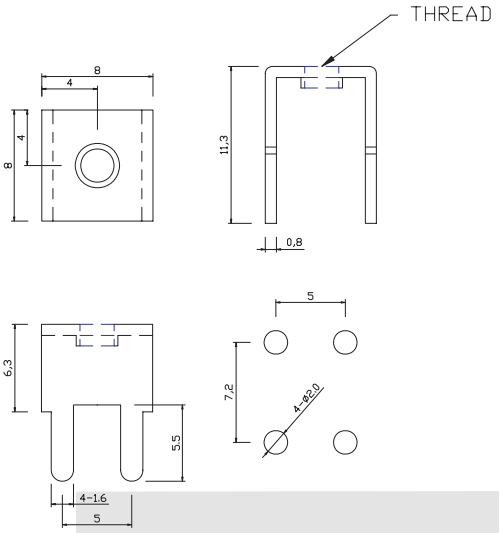

Model No.	TAPPED	Packaging
CW3-M3	M3	1000
CW3-M4	M4	

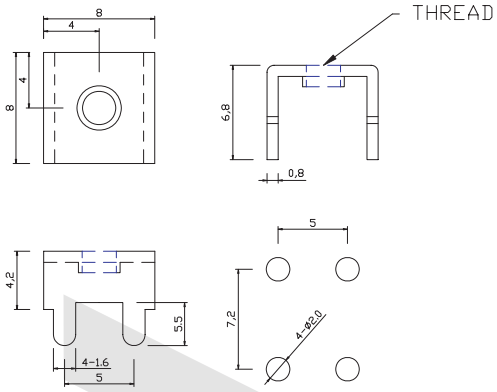

Model No.	TAPPED	Packaging
CW4-M3	M3	1000
CW4-M4	M4	

ORDER INFORMATION

KLS8-01144 - CW1-M3

- Item No.
- PC Board terminal Series
- Part Number

Terminals Series

KLS8-01145 Terminal Series

Terminal Material: Brass



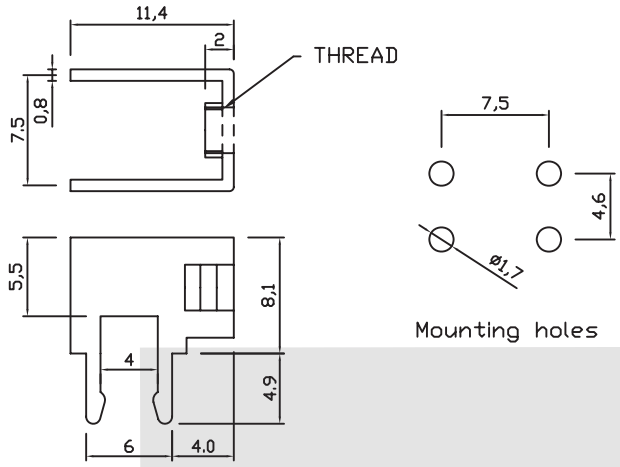

Model No.	THREAD	Packaging
CR1-M3	M3	1000
CR1-M4	M4	

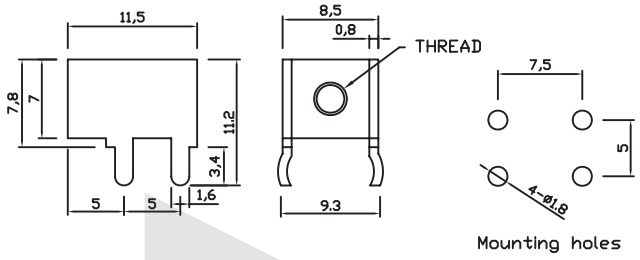

Model No.	THREAD	Packaging
CR2-M3	M3	1000
CR2-M4	M4	

ORDER INFORMATION

KLS8-01145 - CR1-M3

- Item No.
- Terminal Series
- Part Number

Terminals Series

KLS8-01146 Terminal Series

Terminal Material: Brass



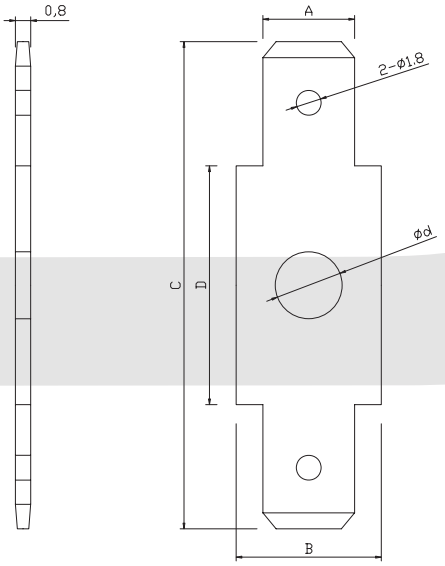

Model No.	A	B	C	D	ød	Packaging
PC-187	4.8	6.6	30.4	17	3	1000
PC-250A	6.4	8.2	37	20.5	4	
PC-250B	6.45	8.1	30.6	14.2	4.3	

ORDER INFORMATION

KLS8-01146 - PC-187A

- PC-187A: Item No.
- 01146: Terminal Series
- KLS8: Part Number

Terminals Series

KLS8-01147 Terminal Series

Terminal Material: Brass



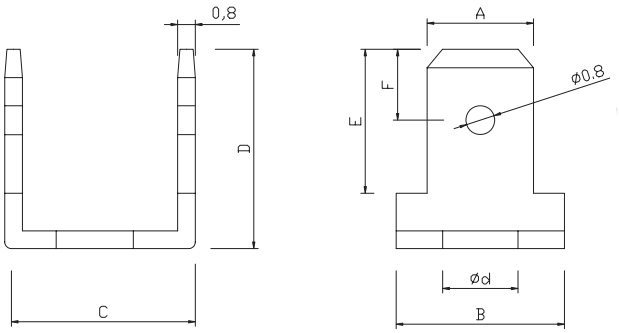

Model No.	A	B	C	D	E	F	ød	Packaging
PC-187A	4.8	6.6	9	11.3	6.7	3.8	3.5	1000
							4.3	
PC-250A	6.4	8.2	10	14	8.2	4	3.5	
							4.3	
PC-250B	6.4	8.2	9	12.2	8.2	4	5.2	
							4.3	

ORDER INFORMATION

KLS8-01147 -PC-187A-3. 5

- Item No.
- Terminal Series
- Part Number

Terminals Series

KLS8-01148 Terminal Series

Terminal Material: Brass



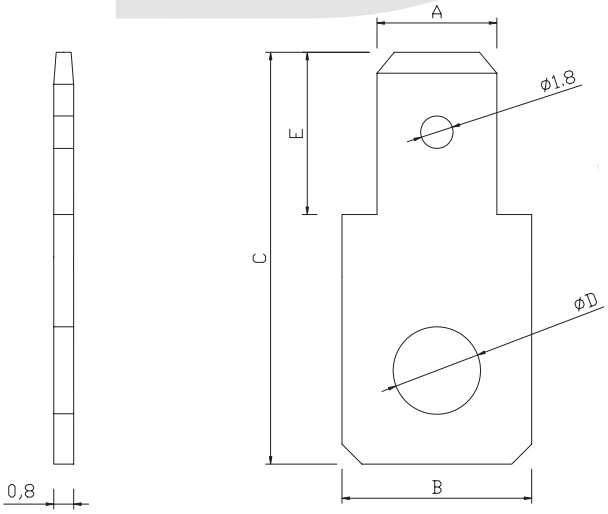

Model No.	A	B	C	øD	E	Packaging
PC-187A	4.8	7.6	15.5	3.5	6.5	1000
PC-250A	6.35	8	19.2	5.2	8.4	
				4.3		

ORDER INFORMATION

KLS8-01148 -PC-187A-3.5

- Item No.
- Terminal Series
- Part Number

Terminals Series

KLS8-01149 Terminal Series

Terminal Material: Brass



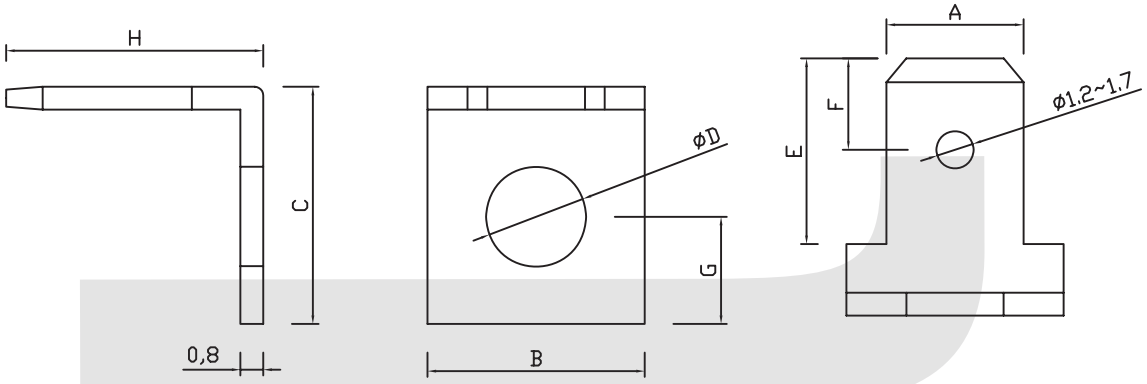

Model No.	A	B	C	H	E	F	G	øD	Packaging
PC-187A	4.8	7.6	7.8	9.1	6.4	3.2	3.4	3.5	1000
								4.3	
PC-250A	6.35	8	8	11.5	8	4.3	4	4.3	
								5.3	
								3.5	
PC-110A	2.8	4.6	4.6	9.3	7	1.5	3.6	2.5	

ORDER INFORMATION

KLS8-01149 -PC-187A-3.5

- Item No.
- Terminal Series
- Part Number

Terminals Series

KLS8-01150 Terminal Series

Terminal Material: Brass



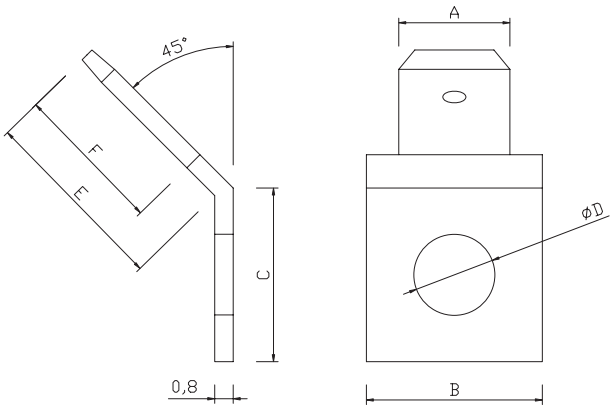

Model No.	A	B	C	øD	E	F	Packaging
PC-187A	4.8	7.6	7.5	3.5	8.2	6.5	1000
				4.3			
				5.3			
PC-250A	6.35	8	8	4.3	11	8.3	
				5.3			

ORDER INFORMATION

KLS8-01150 -PC-187A-3. 5

- Item No.
- Terminal Series
- Part Number

Terminals Series

KLS8-0604 Screw Press Line Cap Series

Temperature Rating: 105°C
Maximum Electrical Rating: 300 VOLTS
APPROVED: UL CSA
Material: UL Nylon 66, with spring inside.
Usage: peel wire coat, insert the wire in, then tighten.

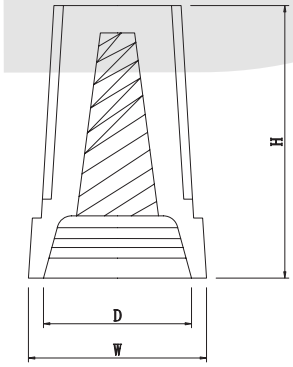



ITEM NO.	SUITABLE WIRE NO. & A.W.G.	DIMENSION inch(mm) H	W	D	COLOR	Q'TY BOX
WN1	MIN #20X1+#22X1 MAX #16X2	0.598 15.2	0.339 8.6	0.264 6.7	GREY ORANGE	1000
WN2	MIN #20X3 MAX #16X3	0.693 17.6	0.386 9.8	0.291 7.4	BLUE ORANGE	1000
WN3	MIN #20X3 MAX #16X3+#18X1	0.866 22	0.472 12	0.39 9.9	ORANGE YELLOW	500
WN4	MIN #14X1+#18X1 MAX #14X4+#18X1	0.965 24.5	0.551 14	0.433 11	YELLOW ORANGE, RED	500
WN6	MIN #14X2 MAX #10X2+#12X2	1.079 27.4	0.661 16.8	0.5 12.7	RED	250
WN8	MIN #12X3 MAX #10X4	1.286 32.2	0.72 18.3	0.504 12.8	GREY	200

ORDER INFORMATION

KLS8- 0604 - WN1

- WN1 — Item No.
- 0604 — Screw Press Line Cap Series
- KLS8 — Part Number

Terminals Series

KLS8-0605 Double wings screw on wire connectors Series

Material: UL Nylon 66, with spring inside.
Usage: peel wire coat, insert the wire in, then tighten.

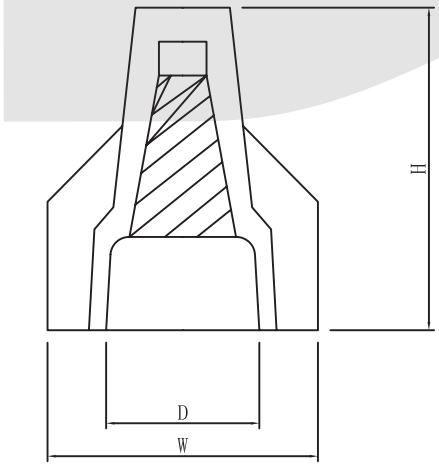



ITEM. NO.	H (mm)	W (mm)	D (mm)	SUITABLE WIRES	COLOR
SW-P1	22	19	12.5	MIN#18 2 MAX#12 3	Yellow
SW-P2	28	22	15	MIN#14 2 MAX#10 4	Red

ORDER INFORMATION

KLS8- 0605 - SW - P1

- SW - P1: Item No.
- 0605: Double wings screw on wire connectors Series
- KLS8-: Part Number

Terminals Series

KLS8-0606 Rapid joint Series

Maximum Electrical Rating: 105°C 600 VOLTS MAX.
Insulation Material: P.P
Terminal Material: BRASS

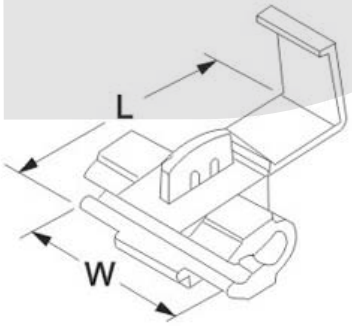



WIRE RANGE A.W.G. mm²	ITEM NO.	DIMENSION inch(mm) W	DIMENSION inch(mm) L	FIGURE	COLOR	Q'TY BOX
22-18 A.W.G. 0.5-0.75 mm²	878100	0.787 20	1.063 27	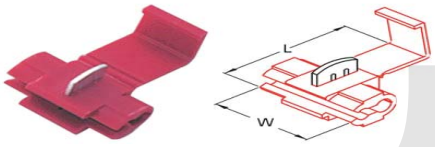	RED	500
	878100N	0.787 20	1.063 27	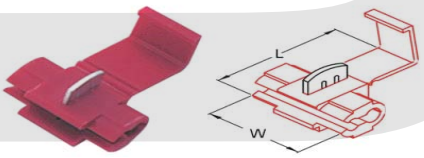	RED	500
18-14 A.W.G. 0.75-2.5 mm²	878101	0.787 20	1.063 27	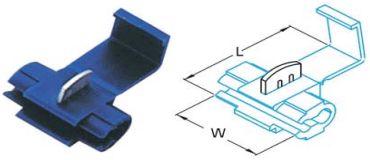	BLUE	500
	878101W	0.787 20	1.063 27	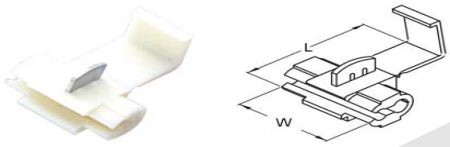	WHITH	
12-10 A.W.G. 4-6 mm²	878201	0.807 20.5	1.358 34.5		YELLOW	200

ORDER INFORMATION

KLS8- 0606 - 878100

- Item No.
- Rapid joint Series
- Part Number

Terminals Series

KLS8-0606 Rapid joint Series

Maximum Electrical Rating: 105°C 600 VOLTS MAX.
Insulation Material: NYLON
Terminal Material: PHOSPHOR BRONZE



WIRE RANGE A.W.G. / mm^2	ITEM NO.	Suggested Mate With Male Tab (Thickness X Width)	DIMENSION inch(mm) W	DIMENSION inch(mm) L	FIGURE	COLOR	Q'TY BOX
22-18 A.W.G. 0.5-0.75 mm^2	878006	MDFNY1-250 (.032X.250)	0.386 / 9.8	1.457 / 37	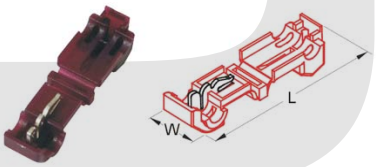	RED	500
18-14 A.W.G. 0.75-2.5 mm^2	878106	MDFNY2-250 (.032X.250)	0.386 / 9.8	1.457 / 37	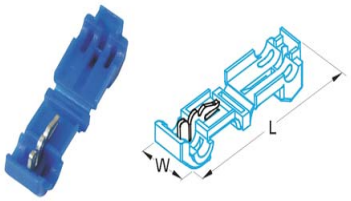	BLUE	500
12A.W.G. 4mm^2	878206	MDFNY5-250 (.032X.250)	0.386 / 9.8	1.457 / 37	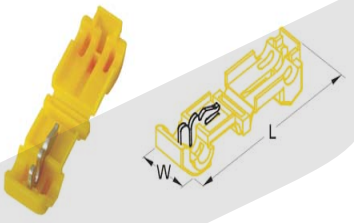	YELLOW	500

ORDER INFORMATION

KLS8- 0606 - 878100

- 878100 — Item No.
- 0606 — Rapid joint Series
- KLS8 — Part Number

Terminals Series

KLS8-0606 Rapid joint Series

Maximum Electrical Rating: 105°C 600 VOLTS MAX.
Insulation Material: 878104,878107,878109 : P. P.
878008,878108 : NYLON
Terminal Material: BRASS

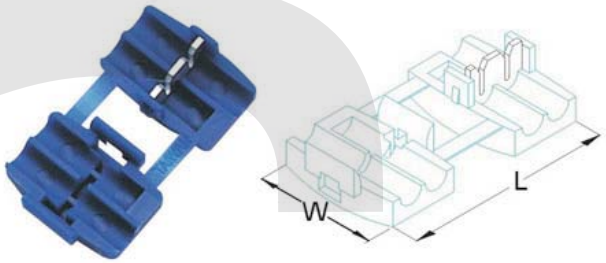

WIRE RANGE A.W.G. mm^2	ITEM NO.	DIMENSION inch(mm) W	DIMENSION inch(mm) L	FIGURE	COLOR	Q'TY BOX
16-14 A.W.G. 1.5-2.5 mm^2	878104	0.787 20	1.929 49	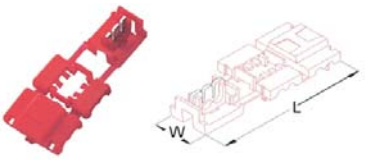	RED/BLUE	250
18-14 A.W.G. 0.75-2.5 mm^2	878107	0.689 17.5	1.22 31	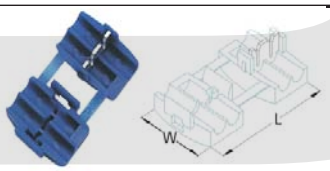	BLUE/ BLACK	500
18-14 A.W.G. 0.75-2.5 mm^2	878109	1.102 28	1.22 31	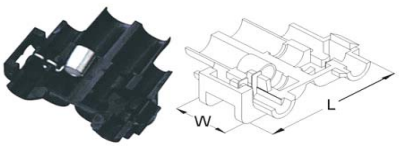	BLACK	250
22-18 A.W.G. 0.5-0.75 mm^2	878008	1.378 35	1.339 34	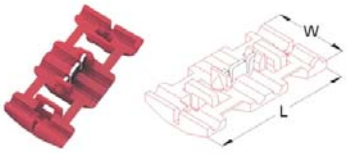	RED	250
18-14 A.W.G. 0.75-2.5 mm^2	878108	1.378 35	1.339 34	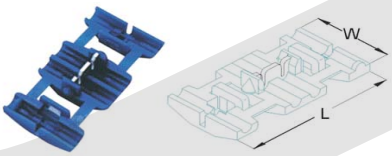	BLUE	250

ORDER INFORMATION

KLS8- 0606 - 878100

- 878100 — Item No.
- 0606 — Rapid joint Series
- KLS8 — Part Number

KLS

1-Connectors & Connector Components-Разъемы, соединители и их узлы

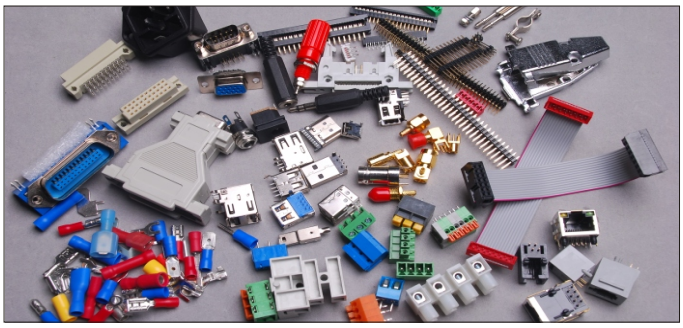

1-1 Wire to Board connectors
1-2 Board to Board connectors
1-3 Input/Output (Box to Box)
1-4 Socket & Card connectors
1-5 Power connectors
1-6 Audio & Video connectors
1-7 RF & Coax
1-8 Terminal Blocks & Strips
1-9 Terminals & Splices
1-10 **Circular connector**

More . . .



KLS ELECTRONIC CO; LTD. WWW.CNKLS.COM Email:sales@cnkls.com
Tel:0086 574 86824882 Fax:0086 574 86824882

Connectors Industrial Circular Series

KLS15-226-FQ Connectors Industrial Circular Series

Introduction

FQ series waterproof round electric connector accord with Ministry of the Electronics Industry components and parts industrial administration bureau office criticize standard DZ4Q/RE008-84 make, advanced structure of producing etc., high dependability have, jack is it adopt high reliable squirrel -cage elasticity exposed to replacing the traditional line reed structure to exposed to, the products have the resistance of contacting low , anti-vibration , shock-resistant , such characteristics as the sealing is strong, the seat connection of the plug is joined fast for the mouth type of the card , simple to use , easy to operate, widely used in the electric connection among various kinds of electronic equipment.



TECHNICAI CHARACTERISTICS

Temperature: -55°C ~ +105°C
Relative humidity: 98± 3% at 40°C
Vibration: 10-2000HZ, 150m/s^2
Shock : 500m/s^2
Atmospheric : 1 KPa
Resistance: 0.1Ω Min.
Endurance: 500 cycles

Experimental voltage (50HZ)

Exposed to the centre-to -centre spacing correctly	Under the normal condition	After test moistly
⩾ 3.5mm	1500V	1000V
2.8mm	1200V	800V

Experimental voltage (50HZ) under the low pressure condition

Atmospheric pressure	Exposed to the centre-to-centre spacing correctly	
	⩾ 3.5mm	2.8mm
46.7	1000V	730V
8.5	500V	400V
4.4	400V	300V

Insulating resistance

Under the normal condition	Under the high-temperature condition	After test moistly
⩾ 5000MΩ	⩾ 500MΩ	⩾ 100MΩ

ORDER INFORMATION

Product NO.: KLS15-226- FQ 14-4 T K - 6 S

Pos. NO.

FQ: Series Prefix Bayonet waterproof circular connectors

Type: mounting diameter of recepatcle: 14,18,24,30

Number of contacts: FQ14: 2,3,4,5,6,7,9
FQ18: 3,4,5,6,7,12
FQ24: 4,5,6,10,19,26
FQ30: 9,32,42,55

Type of plug or receptacle:
T- Straight wire Spring Plug
TR-Right angle wire Spring Plug
ZP-Cable Receptacle
Z- Square Flange Receptacle
YZ- Circular Receptacle

Dust Cover: C-Metal dustproof cover
S-Plastic dustproof cover
X-Rubber dustproof cover

Diameter of matching cable:
FQ14: Φ5、Φ6、Φ7、Φ8mm
FQ18: Φ6、Φ8、Φ9、Φ10mm
FQ24: Φ6、Φ10、Φ12、Φ14mm
Fq30: Φ14、Φ16、Φ18mm

Type of contact: J-pin
K-socket

Connectors Industrial Circular Series

KLS15-226-FQ Connectors Industrial Circular Series

Straight Wire Spring Plug

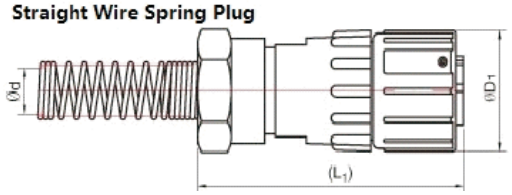

Type	ΦD1	L1	Φd Cable sealing shroud
FQ14	Φ 21	47/50	Φ5、Φ6、Φ7、Φ8
FQ18	Φ 27	53	Φ6、Φ8、Φ9、Φ10
FQ24	Φ 33	61	Φ6、Φ10、Φ12、Φ14
FQ30	Φ 39.5	68	Φ14、Φ16、Φ18

Square Flange Receptacle

Mounting Dimensions

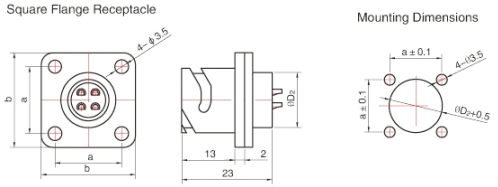

Type	a	b	ΦD2
FQ14	17± 0.2	24	Φ 14
FQ18	20± 0.2	27	Φ 18
FQ24	26± 0.2	33	Φ 24
FQ30	31± 0.1	38	Φ 30

Cable Receptacle

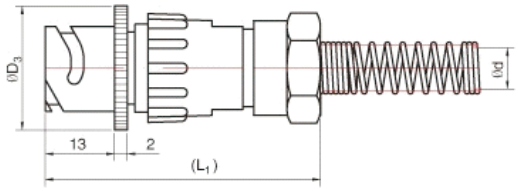

Type	ΦD3	L1	Φd Cable sealing shroud
FQ14	19.7	47/50	Φ5、Φ6、Φ7、Φ8
FQ18	23.8	53	Φ6、Φ8、Φ9、Φ10
FQ24	30	61	Φ6、Φ10、Φ12、Φ14
FQ30	36	68	Φ14、Φ16、Φ18

Circular Receptacle:

Mounting Dimensions:

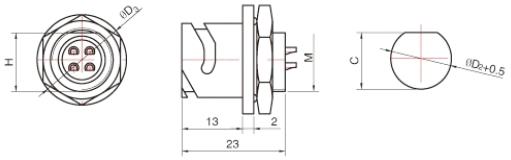

Type	ΦD3	M	ΦD2	H	C
FQ14	19.7	M14x1	Φ 14	13	13.2
FQ18	23.8	M18x1	Φ 18	17	17.2
FQ24	30	M24x1	Φ 24	23	23.2
FQ30	36	M30x1	Φ 30	29	29.2

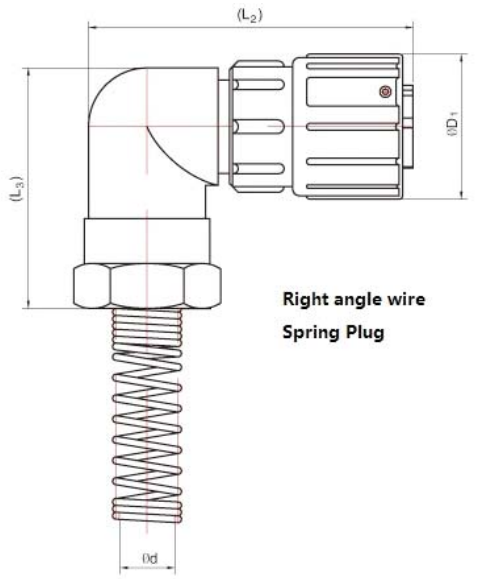

Type	ΦD1	L2	L3	Φd Cable sealing shroud
FQ14	Φ 21	38.3	37	Φ6、Φ7、Φ8
FQ18	Φ 27	43.8	38	Φ6、Φ8、Φ9、Φ10
FQ24	Φ 33	55.8	45	Φ6、Φ10、Φ12、Φ14
FQ30	Φ 39.5	57.5	50	Φ14、Φ16、Φ18

Connectors Industrial Circular Series

KLS15-226-FQ Connectors Industrial Circular Series

Exposed to a diameter	Electric current	Voltage (≤40Hz)		Exposed to the resistance
0.8mm	2A	Contact centre-to-centre spacing ≥3.5mm	Contact centre-to-centre spacing 2.8mm	0.01Ω
1.0mm	3A			
1.5mm	10A	500v	400v	0.005Ω
				0.0025Ω
2.5mm	25A			0.001Ω

The Number and Arrangement of Contacts

Ø0.8 — Ø1

Ø1.5 — Ø2.5

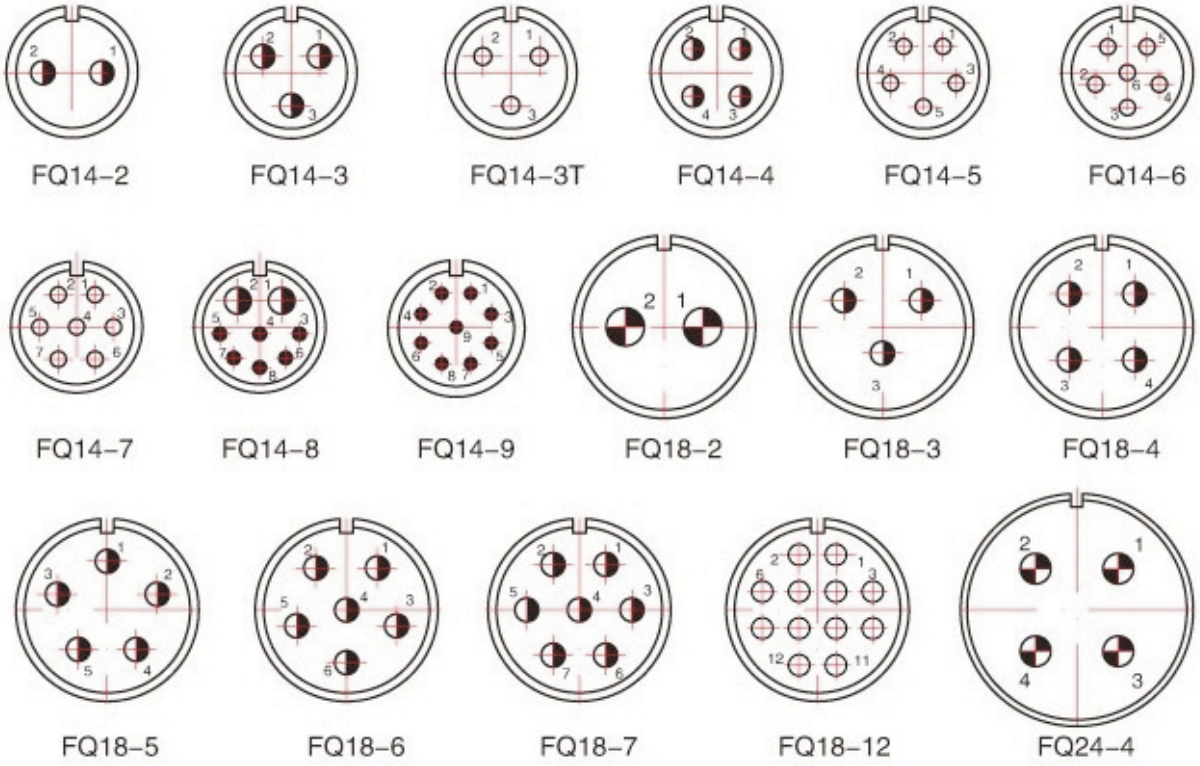

Connectors Industrial Circular Series

KLS15-226-FQ Connectors Industrial Circular Series

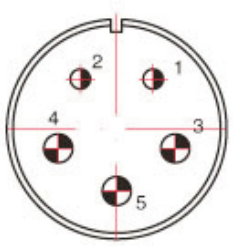

FQ24–5

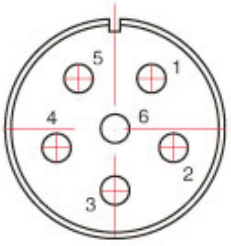

FQ24–6

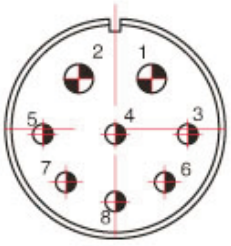

FQ24–8



FQ24–8T

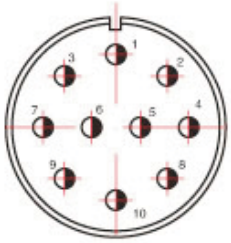

FQ24–10

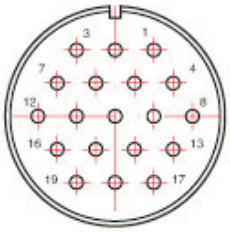

FQ24–19

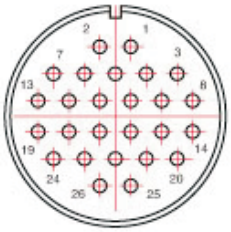

FQ24–26

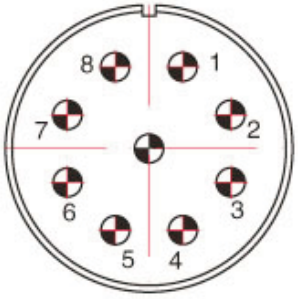

FQ30–9

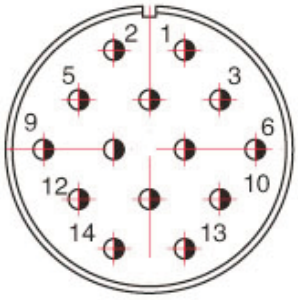

FQ30–14

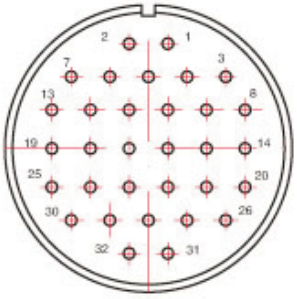

FQ30–32

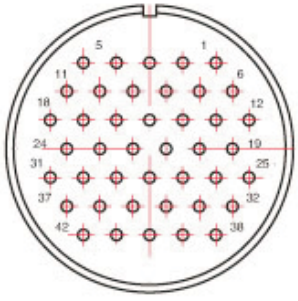

FQ30–42

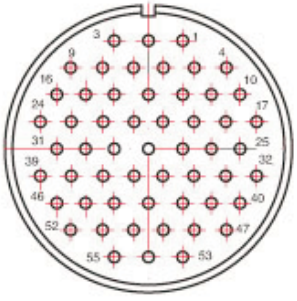

FQ30–55

Russia Standard PC Type

KLS15-RCS01-PC4 type small connector

KLS15-RCS01-PC series are used widely in all kinds of electronic equipment.This connect is small in size and light in weight.The flange are round and square.



Technical characteristics
Operating voltage:250V
Rated current:5A
Contact Resistance :<5MΩ
Insulation resistance:<3000MΩ
Temperature: -55ºC~+125ºC
Relative Humidity: 93% at 40±2ºC
Atmospheric pressure: 101.33~6.7kpa
Vibration, the peak impact acceleration: 10~2000Hz 196m / s 2
Mechanical shock, the peak impact acceleration: 196m / s 2
Endurance :500cycles
Water proof: IP≥68
The connect is water-repellent in one meter deep water for 30 minutes

Structure of Insulator

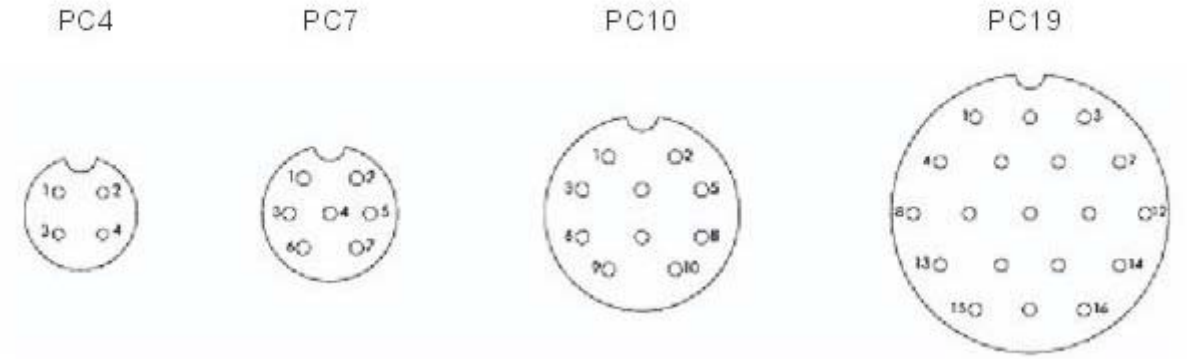

ORDER INFORMATION

Product NO.: KLS15-RCS01-PC4 T B

Pins: 4,7,10,19pin

Type: T-Plug (Female+Cover)
B-Flange Receptacle
F- Female Plug
C-Cover



T-Plug (Female+Cover)



B-Flange Receptacle



C-Cover

Russia Standard PC Type

KLS15-RCS01-PC4 type small connector

Dimension: (mm)

PC4-T/B

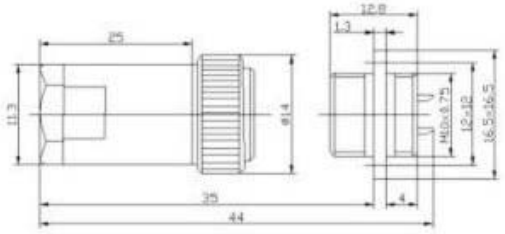

PC7-T/B

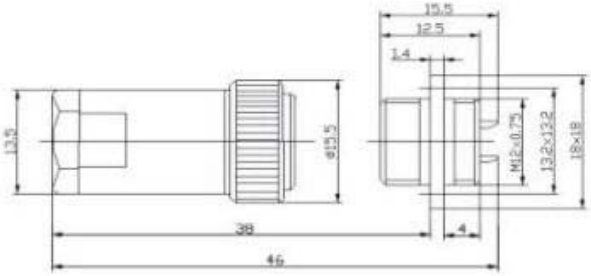

PC10-T/B

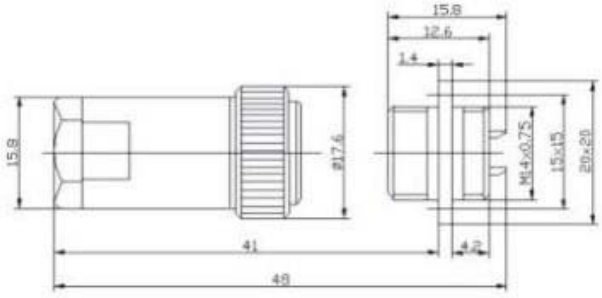

PC19-T/B

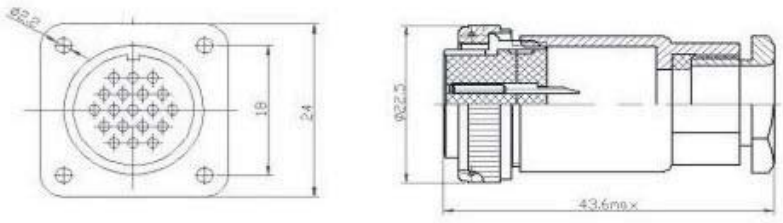

ORDER INFORMATION

Product NO.: KLS15-RCS01-PC4 T B

Pins: 4,7,10,19pin

Type: T-Plug (Female+Cover)
B-Flange Receptacle
F- Female Plug
C-Cover



T-Plug (Female+Cover)



B-Flange Receptacle



C-Cover

Russia Standard 2PM Type

KLS15-RCS02-2PM type military connector

KLS15-RCS02-2PM Russian type military connector, which is made according to the Russian Military Standard, widely used for the electricity connection and signal transfer, it's special structure and design can avoid the shortage of other similar connectors, for example, the screw & hole for the wire on the outer shell, it can used more convenient. The inner insulation and pins structure are also enhance its stability and reliability, this series of connectors can also be waterproof, so it can used on outdoor equipments, Its special design and characteristics have got good reputation from the market.



Technical characteristics

Operating voltage: 400V AC
Rated current: φ1.0-5A φ1.5-10A
Contact Resistance :φ1.0-0.005Ω φ1.5-0.0025Ω
Insulation resistance:Normal:20MΩ Min. Moistheat:2MΩ Min.
Temperature: -60 C~+150 C
Atmosphere:133.37 10-12 Pa
Vibration: 10~200Hz 10g
Endurance : 500cycles

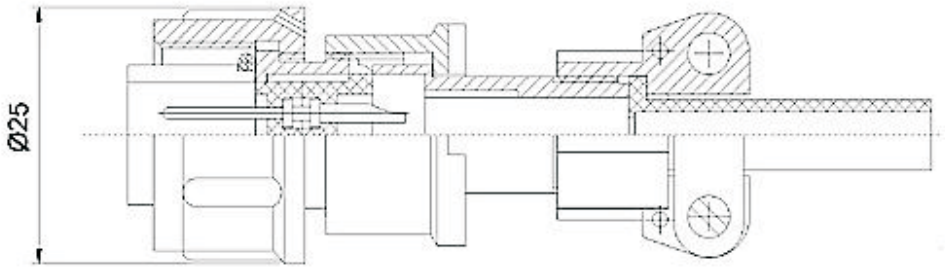

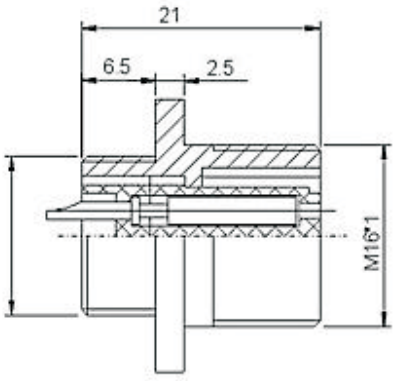

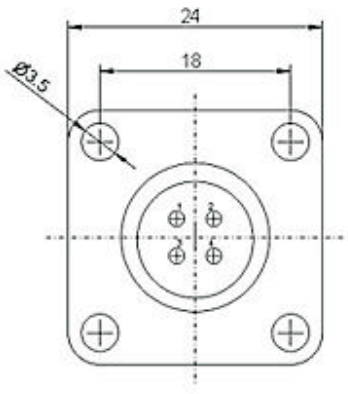

ORDER INFORMATION

Product NO.: KLS15-RCS02-2PM-14-4 T K 2

Type:mounting diameter of recepatcle : 14,18,22,24

Number of contacts:

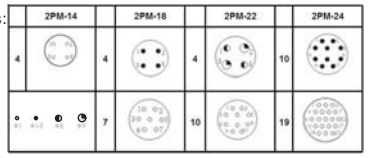

1-gold plated pin
2-silver plated pin

K-socket J-pin

T-Plug Z-Flange Receptacle

Russia Standard P Type

KLS15-RCS03-P type connector

P type common round linker, accords with SJ/T1049694, 8 varieties of P16, P60 screw thread, more than 1800 pieces specification, include: vertical, curve, shield, non-shield, airproof, and non-airproof, etc.

the diameter of contact pieces is Φ 1.5 、Φ 2.5、Φ 3.5、Φ 5.5mm, gilt and silver-plated 。



Technical characteristics

Relative humidity:it can reaches 93% at 40 C
Ambient temperature: -60 C~+50 C
Vibration:10 ~ 200Hz , 95m/S2
Insulated resistance:normal temperature: 20MΩ Min.
Wet heat: 20MΩ Min.
Life duration: 500cycles

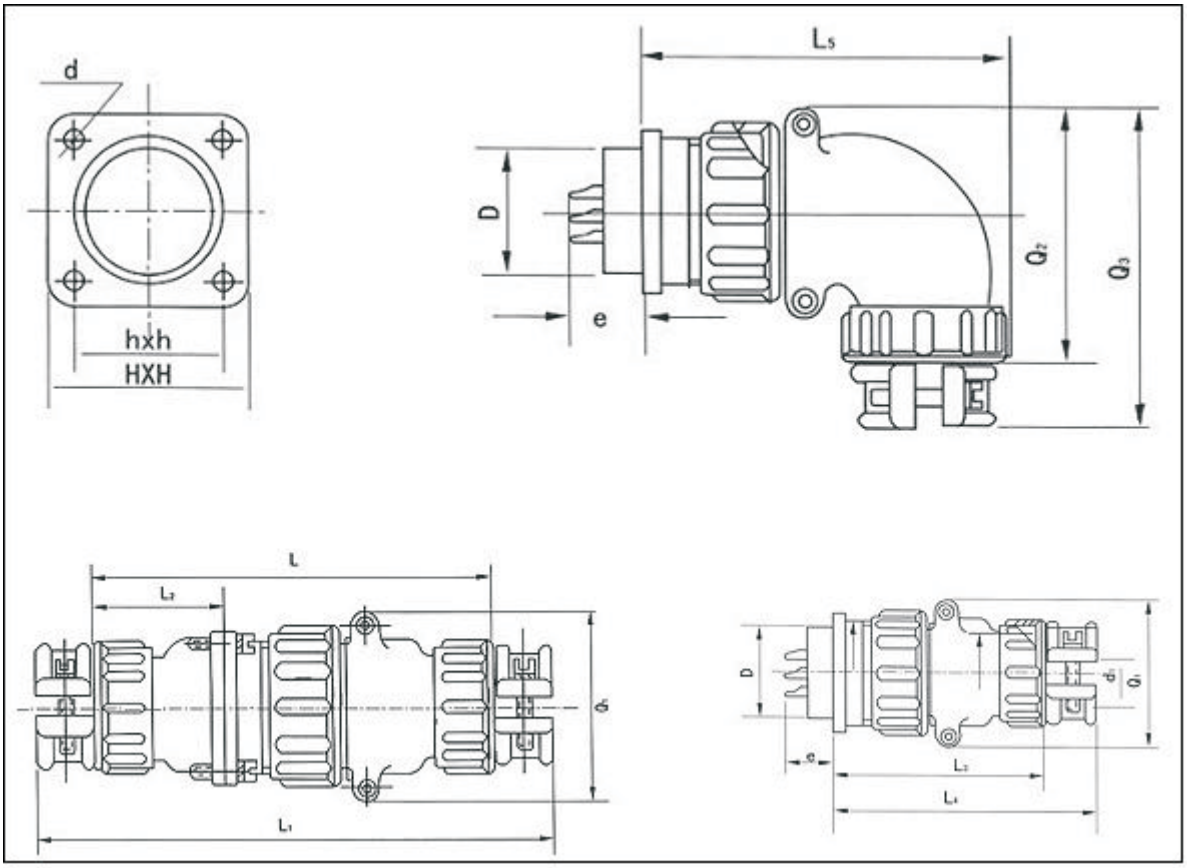

ORDER INFORMATION

Product NO.: KLS15-RCS03-P 20-4 T K-1 M

- P series connector
- Type:mounting diameter of recepatcle : 16,20,28,32,40,48,55
- Number of contacts:2,3,4,5,6,7,8,9, 10,12,14,15,16,20,26,30,35
- T-Plug Z-Flange Receptacle
- K-socket J-pin
- Contact assembled code
  - M - Airproof Receptacle
  - A -Non-airproof Receptacle
  - P - Straight Screen Plug
  - Q - Straight Non-Screen Plug
  - R - Syphon Screen Plug
  - S - Syphon Non-Screen Plug

Russia Standard P Type

Exterior and fixing demension of socket

Code	P16	P20	P28	P32	P36	P40	P48	P55
D	16	20	28	32	36	40	48	55
L1	106	114	128	134	140	142	146	146
L	86	92	100	106	112	114	118	118
L2	28	32	36	40	42	42	44	44
L3	58	60	64	66	70	72	74	74
L4	68	71	78	80	84	86	88	88
L5	64	71	81	81	84	88	98	106
Q1	28.5	36	48	52	54	60	68	74
Q2	40	48	62	66	67	72	81	88
Q3	50	59	76	80	81	86	95	102
h	19	22	30	32	34	40	48	52
H	25	30	38	40	42	48	58	64

Contacts compages code list

Diameter of socket (mm)	Number of contact					Assembled code
	Pins	According the diameter grouping (mm)				
		1.5	2.5	3.5	5.5	
16	2	2				1
	3	3				2
	4	4				3
20	2	2				1
	2		2			2
	3		3			3
	3	1	3			4
	4		4			5
	4	4				7
	4	2	2			8
	5		5			9
	5	5				10
	7	7				11
28	2			2		1
	4	4				7
	4	2	2			8
	4		4			9
	4		2	2		2
	4	2		2		10
	6	4		2		3
	6	6				11
	7		7			4
	7	7				12
	7	5	2			13
	7	4	3			14
	7	3	4			15

Diameter of socket (mm)	Number of contact					Assembled code
	Pins	According the diameter grouping (mm)				
		1.5	2.5	3.5	5.5	
32	8		8			2
	8	8				7
	8	7	1			8
	8	4	4			9
	10	10				10
	10	6	4			11
	12	6	6			3
	12	12				12
	14	14				4
40	3				3	1
	9		5	4		3
	14	8	6			3
	14	12	2			4
	14	14				5
	15	15				6
	15	13	2			7
	16	14	2			8
	16	16				9
48	20	14	6			5
	26		26			6
55	30	22	8			3
	30	30				4
	30	24	6			5
	35	23	10	2		7
	35	33		2		8

Contace arrangement

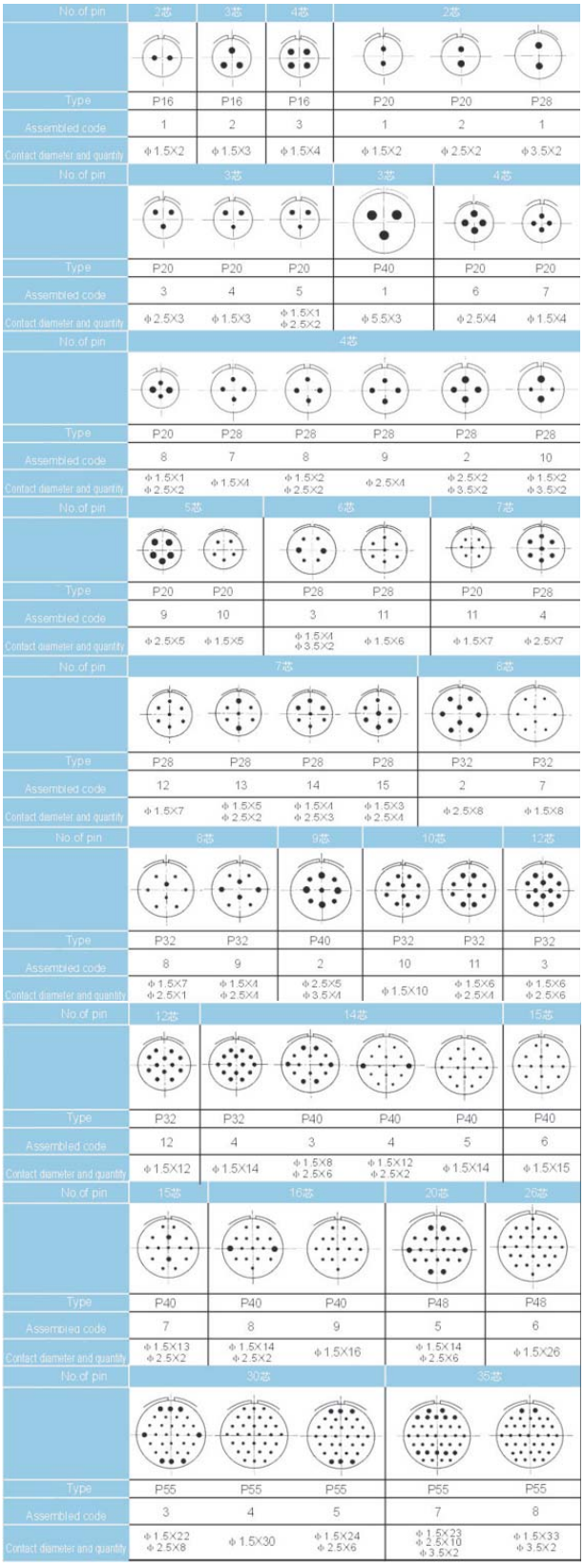

Russia Standard PB Type

KLS15-229-PB type connector

KLS15-229-PB series circular connectors are used extensively in line connections between electrical equipment, various instruments and meters. These connectors have the features of small volume,light weight,convenient application, high durability of plugging and unplugging,threaded coupling, good sealing performance,high conductivity and high dielectric strength. They are made according to the standard SJ/T10496. They are for military and industrial applications.



Working condition:
Environment temperature:sealed: -55ºC~+70ºC
non-sealed: -55ºC~+50ºC
Relative humidity: 98% at +40ºC
Atmospheric pressure: 2Kpa
Vibration:frequency: 100M/S2 at 10~200Hz
Impact:frequency : 250M/S2 at 40~100Hz
Centrifugal: 250 M/S2
Life span:500 cycles

Technical conditions

Rated voltage

Atmospheric pressure(Kpa)	100	8.5	4.4	2
Working voltage(V)	500	250	175	150

Rated current

Rated current (mm)	1.5	2.5	3.5	5.5
Contact pairs diameter(A)	10	25	50	100

Contact pairs is 1-20: 100% Current
Contact pairs is 21-30: 80% Current
Insulation resistance: 500MΩ Min. Normal
2MΩ Min. At constant moisture test,

Contacdt resistance

Contact of diameter (mm)	1.5	2.5	3.5	5.5
Contact resistance (Ω)	0.0025	0.001	0.0005	0.0003

Single separative power

Diameter of contacts (mm)	1.5	2.5	3.5	5.5
Separating force(N)	3~6	4~8	6~10	10~12

The total resistance of the socket: 0.002Ω Max.
Normal condition :1500V
1000V at constant moisture test

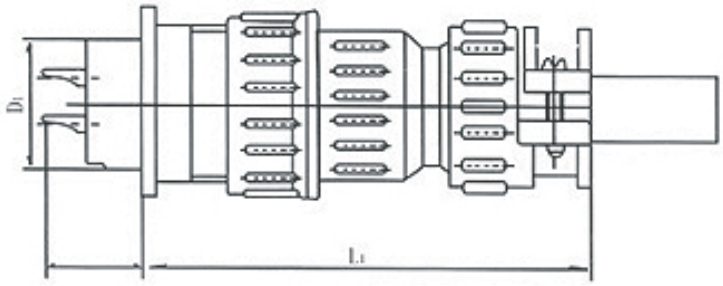

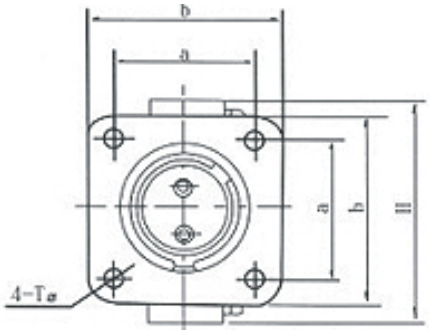

Straight non-screen and non seal plug/receptacle
Straight non-screen and airproof plug/receptacle

ORDER INFORMATION

Product NO.: KLS15-229-PB 20-4 T K-1 M

PB series connector
Type:mounting diameter of recepatcle : 20,28,32,40,48
Number of contacts:2,3,4,5,6,7,8,9, 10,12,13,14,15,16,17,19,20,26,31,42
T- Plug
TR- Right angle wire spring plug
Z- Flange Receptacle
ZP- cable receptacle
K-socket J-pin
M - Airproof Receptacle
A -Non-airproof Receptacle
P - Straight Screen Plug
Q - Straight Non-Screen Plug
R - Syphon Screen Plug
S - Syphon Non-Screen Plug
Contact assembled code

Russia Standard PB Type

Exterior and fixing demension of socket

Type		D 1	b	a	T φ	d 1	d 2	L	L 1	H 1	H 2
20	A	20	30	22 ± 0.2	3.5	18	14	60	71	36	20.5
20	M	20	32	22 ± 0.2	4.5	18	14	64	75	36	20.5
28	A	28	38	30 ± 0.2	3.5	25	21	64	78	48	28.5
28	M	28	40	30 ± 0.2	4.5	25	21	68	82	48	28.5
32	A	32	40	32 ± 0.2	3.5	25	21	66	80	52	32.5
32	M	32	44	32 ± 0.2	4.5	25	21	70	84	52	32.5
40	A	40	48	40 ± 0.2	3.5	32	24	72	86	60	40.5

Contacts compages code list

Diameter of socket (mm)	Number of contact					Assembled code
	Pins	According the diameter grouping (mm)				
		1.5	2.5	3.5	5.5	
20	2	2				1
20	2		2			2
20	3		4			3
20	3	3				4
20	3	1	2			5
20	4		4			6
20	4	4				7
20	4	2	2			8
20	5		5			9
20	5	5				10
20	7	7				11
28	2			2		1
28	4	4				7
28	4	2	2			8
28	4		4			9
28	4		2	2		2
28	4	2		2		10
28	6	4		2		3
28	6	6				11
28	7		7			4
28	7	7				12
28	7	5	2			13
28	7	4	3			14
28	7	3	4			15
28	17	17				16

Diameter of socket (mm)	Number of contact					Assembled code
	Pins	According the diameter grouping (mm)				
		1.5	2.5	3.5	5.5	
32	8		8			2
32	8	8				7
32	8	7	1			8
32	8	4	4			9
32	10	10				10
32	10	5	5			16
32	10	6	4			11
32	12	6	6			3
32	12	12				12
32	13	9	4			15
32	14	14				4
32	19	19				17
40	3				3	1
40	5			5		10
40	9		5	4		2
40	14	8	6			3
40	14	12	2			4
40	14	14				5
40	15	15				6
40	15	13	2			7
40	16	14	2			8
40	16	16				9
40	26	22	4			11
40	31	31				12
48	5				5	10
48	7			7		9
48	13		13			8
48	20	14	6			5
48	26	26				6
48	26	25	1			7
48	42	42				11

Russia Standard PB Type

Contace arrangement

No.of pin	2芯			3芯		
	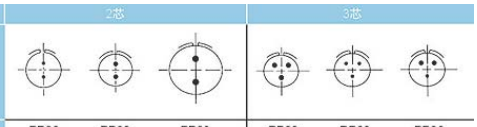					
Type	PB20	PB20	PB28	PB20	PB20	PB20
Assembled code	1	2	1	3	4	5
Contact diameter and quantity	ϕ1.5X2	ϕ2.5X2	ϕ3.5X2	ϕ2.5X3	ϕ1.5X3	ϕ1.5X1 ϕ2.5X2

No.of pin	3芯	4芯				
	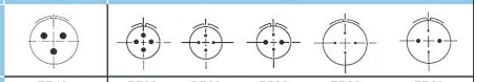					
Type	PB40	PB20	PB20	PB20	PB28	PB28
Assembled code	1	6	7	8	7	8
Contact diameter and quantity	ϕ5.5X3	ϕ2.5X4	ϕ1.5X4	ϕ1.5X2 ϕ2.5X2	ϕ1.5X4	ϕ1.5X2 ϕ2.5X2

No.of pin	4芯			5芯			
	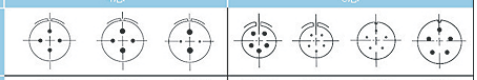						
Type	PB28	PB28	PB28	PB20	PB20	PB40	PB48
Assembled code	9	2	10	9	10	10	10
Contact diameter and quantity	ϕ2.5X4	ϕ2.5X2 ϕ3.5X2	ϕ1.5X2 ϕ3.5X2	ϕ2.5X5	ϕ1.5X5	ϕ3.5X5	ϕ5.5X5

No.of pin	6芯		7芯			
	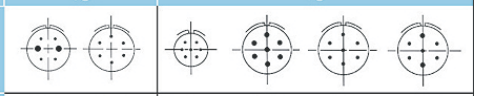					
Type	PB28	PB28	PB20	PB28	PB28	PB28
Assembled code	3	11	11	4	12	13
Contact diameter and quantity	ϕ1.5X4 ϕ3.5X2	ϕ1.5X6	ϕ1.5X7	ϕ2.5X7	ϕ1.5X7	ϕ1.5X5 ϕ2.5X2

No.of pin	7芯				8芯	
	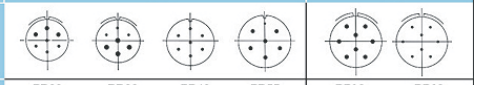					
Type	PB28	PB28	PB48	PB55	PB32	PB32
Assembled code	14	15	9	7	2	7
Contact diameter and quantity	ϕ1.5X4 ϕ2.5X3	ϕ1.5X3 ϕ2.5X4	ϕ3.5X7	ϕ5.5X6 ϕ2.5X1	ϕ2.5X8	ϕ1.5X8

No.of pin	8芯		9芯	10芯	
					
Type	PB32	PB32	PB40	PB32	PB32
Assembled code	8	9	2	10	11
Contact diameter and quantity	ϕ1.5X7 ϕ2.5X1	ϕ1.5X4 ϕ2.5X4	ϕ2.5X5 ϕ3.5X4	ϕ1.5X10	ϕ1.5X6 ϕ2.5X4

No.of pin	10芯	12芯		13芯	
					
Type	PB32	PB32	PB32	PB32	PB48
Assembled code	16	3	12	15	8
Contact diameter and quantity	ϕ1.5X5 ϕ2.5X5	ϕ1.5X6 ϕ2.5X6	ϕ1.5X12	ϕ1.5X9 ϕ2.5X4	ϕ2.5X13

No.of pin	14芯			
	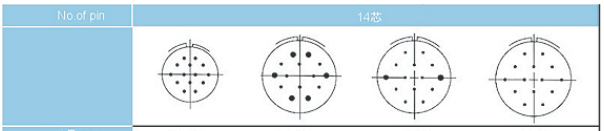			
Type	PB32	PB40	PB40	PB40
Assembled code	4	3	4	5
Contact diameter and quantity	ϕ1.5X14	ϕ1.5X8 ϕ2.5X6	ϕ1.5X12 ϕ2.5X2	ϕ1.5X14

No.of pin	15芯		16芯	
	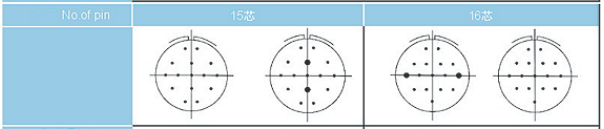			
Type	PB40	PB40	PB40	PB40
Assembled code	6	7	8	9
Contact diameter and quantity	ϕ1.5X15	ϕ1.5X13 ϕ2.5X2	ϕ1.5X14 ϕ2.5X2	ϕ1.5X16

No.of pin	17芯	19芯	20芯	26芯
	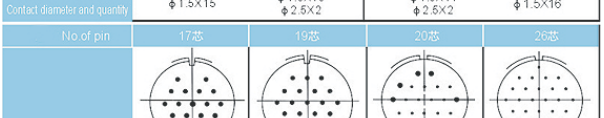			
Type	PB28	PB32	PB48	PB48
Assembled code	16	17	5	6
Contact diameter and quantity	ϕ1.5X17	ϕ1.5X19	ϕ1.5X14 ϕ3.5X6	ϕ1.5X26

No.of pin	26芯	
	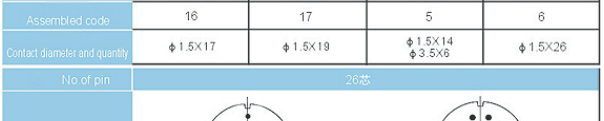	
Type	PB48	PB40
Assembled code	7	11
Contact diameter and quantity	ϕ1.5X25 ϕ2.5X1	ϕ1.5X22 ϕ2.5X4

No.of pin	31芯	42芯
	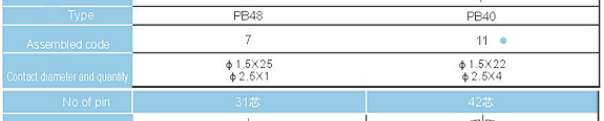	
Type	PB40	PB48
Assembled code	12	11
Contact diameter and quantity	ϕ1.5X31	ϕ1.5X42

KLS

2-Wiring accessories & PCB parts & tubes-Кабельные аксессуары& PCB аксессуары



2-1 Wiring Ducts
2-2 Cable Markers
2-3 Cable Ties
2-4 Wrapping Bands
2-5 Cable Clamps
2-6 Bushings, Conducts
2-7 Cable clips
2-8 PCB Parts
2-9 LED spacers
2-10 Fasteners
2-11 Heat-Shrinkable Tubings

More . . .

KLS

2-Wiring accessories & PCB parts & tubes-Кабельные аксессуары& PCB аксессуары



2-1 **Wiring Ducts**
2-2 Cable Markers
2-3 Cable Ties
2-4 Wrapping Bands
2-5 Cable Clamps
2-6 Bushings, Conducts
2-7 Cable clips
2-8 PCB Parts
2-9 LED spacers
2-10 Fasteners
2-11 Heat-Shrinkable Tubings

More . . .



KLS ELECTRONIC CO; LTD. WWW.CNKLS.COM Email:sales@cnkls.com
Tel:0086 574 86824882 Fax:0086 574 86824882

Wiring Ducts Series

KLS8-01001

Material : made from PVC(grey),good insulation and heat-resisting up to 85℃.

Struction : made up of duct bottom and lid, with two out-holes designd at the bottom.

.

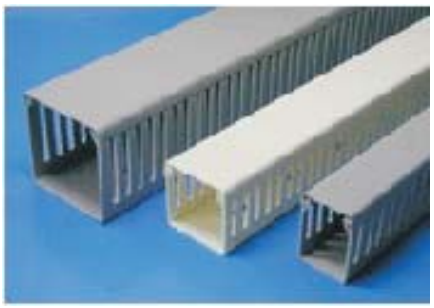

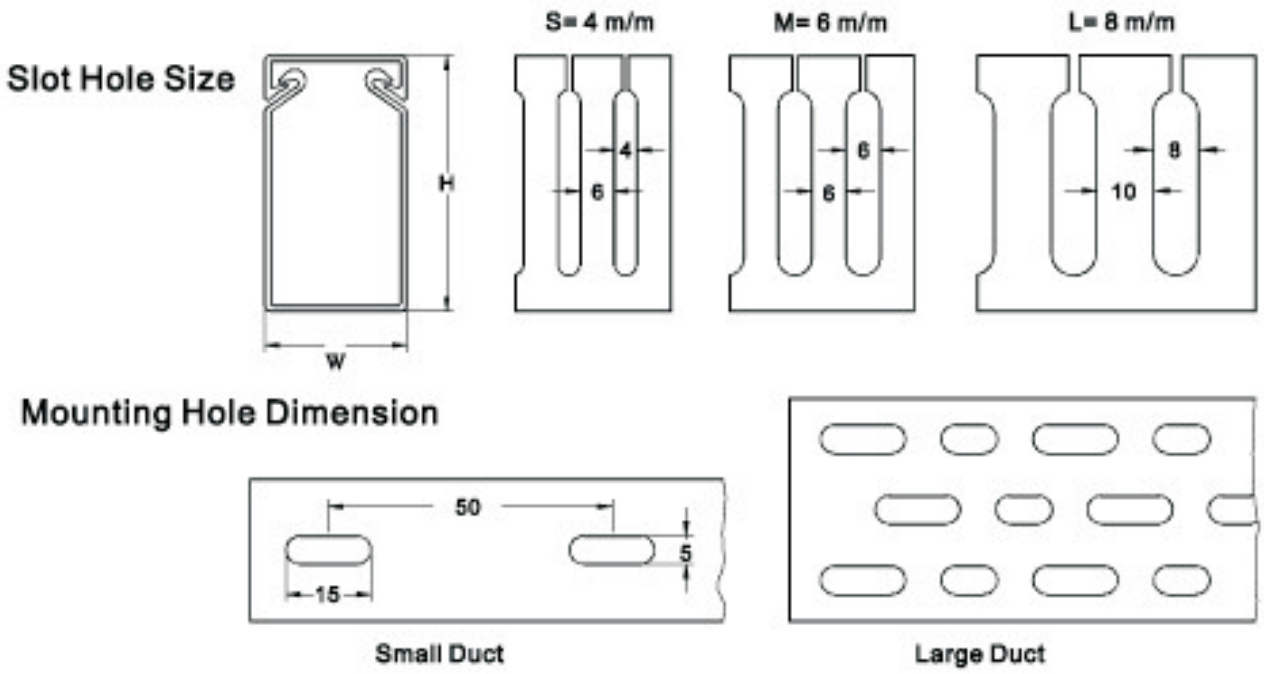

Order Information

Product No.: KLS8-01001

Pos. No.

Series No.

Wiring Ducts Series

ITEM.NO.	H×W	CONTAINED WIRE(1.5^2)	LENGTH
KLS8-01001-HW-2015	20×15	5-10PCS	2M
KLS8-01001-HW-2020	20×20	10-15PCS	
KLS8-010001-HW-2025	20×25	10-20PCS	
KLS8-01001-HW-2525	25×25	10-25PCS	
KLS8-01001-HW-2545	25×45	25-40PCS	
KLS8-01001-HW-3015	30×15	5-15PCS	
KLS8-01001-HW-3020	30×20	10-20PCS	
KLS8-01001-HW-3025	30×25	15-25PCS	
KLS8-01001-HW-3030	30×30	20-30PCS	
KLS8-01001-HW-3035	30×35	30-45PCS	
KLS8-01001-HW-3040	30×40	35-50PCS	
KLS8-01001-HW-3050	30×50	45-60PCS	
KLS8-01001-HW-3525	35×25	25-35PCS	
KLS8-01001-HW-3535	35×35	40-55PCS	
KLS8-01001-HW-4025	40×25	20-40PCS	
KLS8-01001-HW-4030	40×30	35-50PCS	
KLS8-01001-HW-4035	40×35	40-50PCS	
KLS8-01001-HW-4040	40×40	45-55PCS	
KLS8-01001-HW-4060	40×60	60-80PCS	
KLS8-01001-HW-4525	45×25	25-40PCS	
KLS8-01001-HW-4535	45×35	40-55PCS	
KLS8-01001-HW-4545	45×35	60-70PCS	
KLS8-01001-HW-4565	45×65	90-100PCS	
KLS8-01001-HW-5015	50×15	25-35PCS	
KLS8-01001-HW-5025	50×25	25-45PCS	
KLS8-01001-HW-5030	50×30	30-55PCS	
KLS8-01001-HW-5035	50×35	50-60PCS	
KLS8-01001-HW-5040	50×40	60-70PCS	
KLS8-01001-HW-5045	50×45	70-85PCS	
KLS8-01001-HW-5050	50×50	90-100PCS	
KLS8-01001-HW-5055	50×55	100-110PCS	
KLS8-01001-HW-5060	50×60	95-105PCS	
KLS8-01001-HW-5080	50×80	180-200PCS	
KLS8-01001-HW-50100	50×80	220-2500PCS	
KLS8-01001-HW-6040	60×40	90-100PCS	
KLS8-01001-HW-6060	60×60	140-160PCS	
KLS8-01001-HW-6525	65×25	100-110PCS	
KLS8-01001-HW-6545	65×45	180-200PCS	
KLS8-01001-HW-6565	65×65	140-160PCS	
KLS8-01001-HW-8035	80×35	160-180PCS	
KLS8-01001-HW-8045	80×45	180-200PCS	
KLS8-01001-HW-8050	80×50	200-220PCS	
KLS8-01001-HW-8055	80×55	240-290PCS	
KLS8-01001-HW-8080	80×80	280-350PCS	
KLS8-01001-HW-80100	80×100	300-400PCS	
KLS8-01001-HW-100100	100×100	300-400PCS	

Wiring Ducts Series

KLS8-01002

Material : made from PVC(WHITE),good insulation and heatresisting up to 85℃.
Struction : made up of duct bottom and lid.
Application : used in stage, electric, air conditioning or indoors.
Feature : solid design, especially for anti-dust and mouse.

.

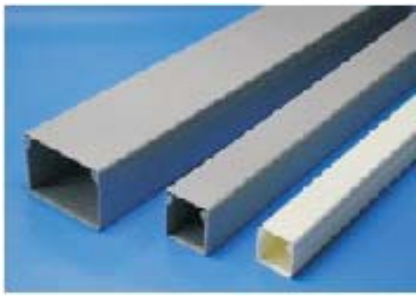

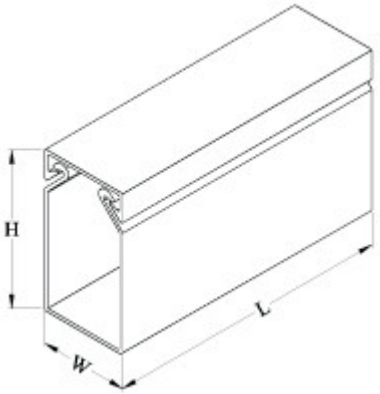

Part No.	WXH(mm)	Wire Capacity	Color	Std. Length,l
KLS8-01002-WH-15X25	15X25	5-12pcs	Grey	2.0M
KLS8-01002-WH-25X25	25X25	10-25pcs	Grey.Milky.White	2.0M
KLS8-01002-WH-25X45	25X45	20-25pcs	Grey	2.0M
KLS8-01002-WH-25X65	25X65	40-45pcs	Grey	2.0M
KLS8-01002-WH-33X33	33X33	25-45pcs	Grey.Milky.White	2.0M
KLS8-01002-WH-33X45	33X45	40-55pcs	Grey	2.0M
KLS8-01002-WH-33X65	33X65	60-75pcs	Grey	2.0M
KLS8-01002-WH-45X45	45X45	60-70pcs	Grey.Milky.White	2.0M
KLS8-01002-WH-45X65	45X65	110-120pcs	Grey	2.0M
KLS8-01002-WH-65X45	65X45	110-120pcs	Grey	2.0M
KLS8-01002-WH-65X65	65X65	180-200pcs	Grey.Milky	2.0M
KLS8-01002-WH-40X40	40X40	60-70pcs	Grey	2.0M
KLS8-01002-WH-50X50	50X50	80-90pcs	Grey.Milky	2.0M
KLS8-01002-WH-60X60	60X60	120-135pcs	Grey.Milky	2.0M
KLS8-01002-WH-72X64	72X64	200-220pcs	Grey	2.0M
KLS8-01002-WH-40X80	40X80	120-135pcs	Grey	2.0M
KLS8-01002-WH-60X80	60X80	180-210pcs	Grey	2.0M
KLS8-01002-WH-80X60	80X60	180-210pcs	Grey.Milky.White	2.0M
KLS8-01002-WH-80X80	80X80	240-290pcs	Grey	2.0M
KLS8-01002-WH-33X100	33X100	180-200pcs	Grey	2.0M
KLS8-01002-WH-48X100	48X100	215-250pcs	Grey	2.0M
KLS8-01002-WH-70X100	70X100	250-300pcs	Grey	2.0M
KLS8-01002-WH-100X100	100X100	300-400pcs	Grey.Milky.White	2.0M
KLS8-01002-WH-100X60	100X60	240-290pcs	Grey	2.0M
KLS8-01002-WH-150X75	150X75	335-500pcs	Grey	2.0M

Order Information

Product No.: KLS8-01002

Pos. No.

Series No.

Wiring Ducts Series

KLS8-01003

Material : made from PVC(WHITE),good insulation and heatresisting up to 85℃.
Struction : made up of duct bottom and lid.
Application : used in stage, electric, air conditioning or indoors.
Feature : solid design, especially for anti-dust and mouse.

.



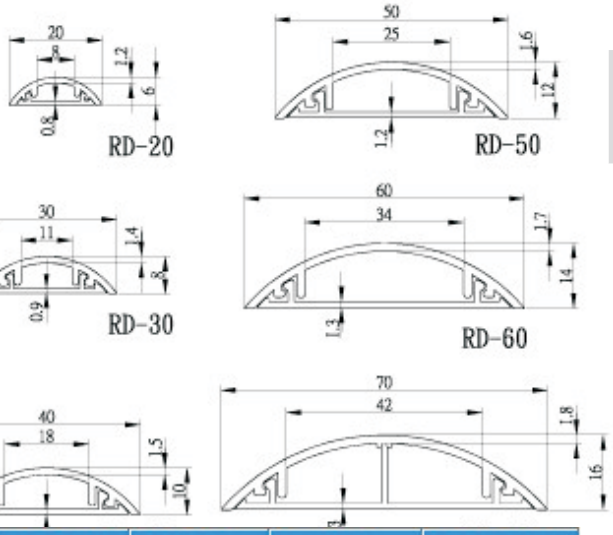

Part No.	W(mm)	w(mm)	H(mm)	h(mm)	Color	Length
KLS8-01003-WH-2006	20	8	6	4.8	Gray White Milky Brown	1M
KLS8-01003-WH-3008	30	11	8	6.6	Gray White Milky Brown	1M
KLS8-01003-WH-4010	40	18	10	8.5	Gray White Milky Brown	1M
KLS8-01003-WH-5012	50	25	12	10.4	Gray White Milky Brown	1M
KLS8-01003-WH-6014	60	34	14	12.3	Gray White Milky Brown	1M
KLS8-01003-WH-7016-	70	42	16	14.2	Gray White Milky Brown	1M

Order Information

Product No.: KLS8-01003

Pos. No.

Series No.

Wiring Ducts Series

KLS8-01004

Material : made from PVC(WHITE),good insulation and heatresisting up to 85℃.

Feature : spacious designed,and the strong adhesive tape in the duct button



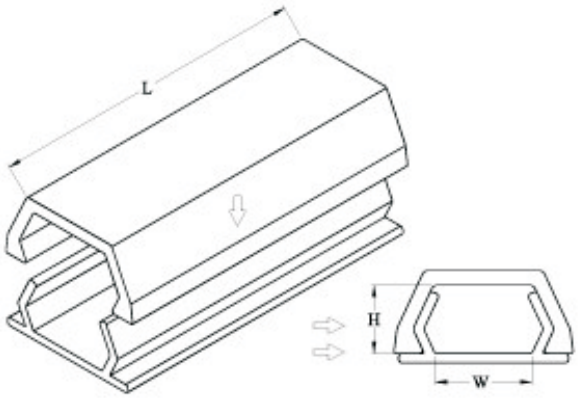

Part No.	W(mm)	H(mm)	Wire Capacity	Color	Length,L
KLS8-01004-1	7	4	1pcs	Gray.Milky.white.Brown	1M
KLS8-01004-2	8	6	2-3pcs	Gray.Milky.white.Brown	1M
KLS8-01004-3	10	7	3-4pcs	Gray.Milky.white.Brown	1M
KLS8-01004-4	15	10	4-7pcs	Gray.Milky.white.Brown	1M
KLS8-01004-5	17	13	7-9pcs	Gray.Milky.white.Brown	1M
KLS8-01004-6	19	16	10-15pcs	Gray.Milky.white.Brown	1M
KLS8-01004-8 -	37	16	30-40pcs	Gray.Milky.white.Brown	1M

Order Information

Product No.: KLS8-01004

Pos. No.

Series No.

Cable Marker Series



KLS8-0801 EC-TYPE Cable Marker Series
Material : Soft PVC,concave conversed shape,no.code in sleeve,elasticity of in-diameter.
Color : yellow
Feature:suitable any size,special length and marking is available to order.

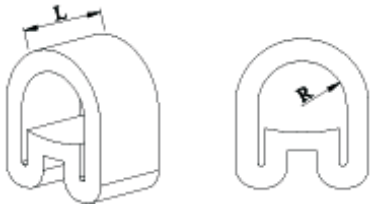

Part No.	Wire Range (mm²)	Inner Dia R(mm)	Length L(mm)	No.	Package
KLS8-0801-EC-0	0.75	2.0~3.2	3.50	0~9A~Z+.-	1000pcs
KLS8-0801-EC-1	0.75~3.0	3.0~5.2	4.00	0~9A~Z+.-	1000PCS
KLS8-0801-EC-2	3.5~8.0	3.6~7.4	5.00	0~9A~Z+.-	500PCS
KLS8-0801-EC-3	8.0~22.0	5.2~10.0	5.50	0~9A~Z+.-	250PCS



KLS8-0807 Flat Cable Marker Series
Material : made from PVC, oil and erosion control.
Feature : used for circle of flat wire size from 3.5mm-7.0mm.



Part No.	Wire Range (mm)	Inner Dia R(mm)	Length L(mm)	No.	Package
KLS8-0807-FM-1	2~8	0.5~7.0	5.00	0~9A~Z+.-	500PCS



KLS8-0809 OM-TYPE Cable Marker Series
Material : Soft PVC, flexible, transfigure hardly.
Color : White
Construction : No. code printed in length 10m/m.
Feature : provide wire marking, install easily and insulation.

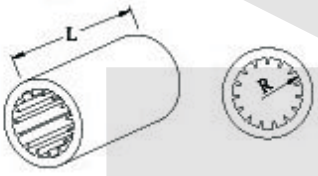

Part No.	Wire Range (mm²)	Inner Dia R(mm)	Length L(mm)	No.	Package
KLS8-0809-OM-0.75	0.75	3.00	10.00	0~999A~Z+.-	100.00
KLS8-0809-OM-1.25	1.25	3.20	10.00	0~999A~Z+.-	100.00
KLS8-0809-OM-2.0	2.00	3.60	10.00	0~999A~Z+.-	100.00
KLS8-0809-OM-3.5	3.50	4.20	10.00	0~999A~Z+.-	100.00
KLS8-0809-OM-5.5	5.50	5.10	10.00	0~999A~Z+.-	100.00
KLS8-0809-OM-8.0	8.00	6.20	10.00	0~999A~Z+.-	100.00
KLS8-0809-OM-14	14.00	7.60	10.00	0~999A~Z+.-	100.00
KLS8-0809-OM-22	22.00	9.10	10.00	0~999A~Z+.-	100.00

Cable Ties Series

KLS8-0501 Moveable Bushing Series

Material : PP And NYLON
Usage : Use suitable length to wrap the slot hole by slot hole size.
Feature : Insulation of wires suit slot hole size, usage is free.

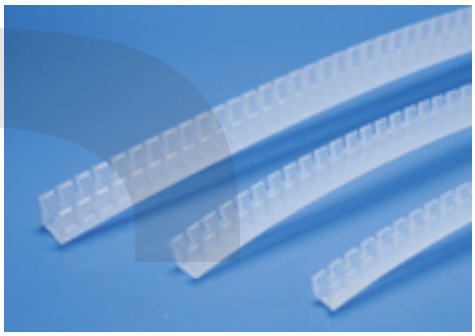

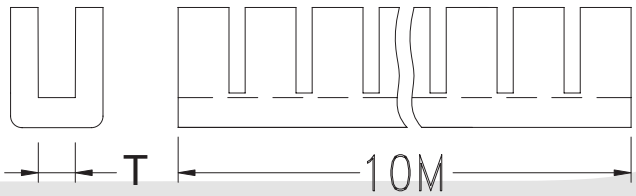

Part No.	Dut(mm) T	Max. Chassis thickness	Package
KLS8-0501-KG-012	1.2	1.0~1.2	10M
KLS8-0501-KG-016	1.6	1.0~1.6	10M
KLS8-0501-KG-020	2.0	1.6~ 2.0	10M
KLS8-0501-KG-024	2.4	1.6~2.4	10M
KLS8-0501-KG-032	3.2	2.4~3.2	10M
KLS8-0501-KG-045	4.5	3.2~4.5	10M

ORDER INFORMATION

KLS8 - 0501 - KG-012

- KG-012: Length
- 0501: Stainless Steel Cable Ties Series
- KLS8: Part Number

Cable Ties Series

KLS8-0901 Cable Ties Series

Material : UL Approved Nylon6/6, 94V-2
All nylon, one-piece construction-up to 250 lbs (114kgs) min. loop tensile strength
Operating temperature : -40°C to 85°C (-40 F to 185 F)
Specification : UL approved, UV, Heat Resistant, Color are available

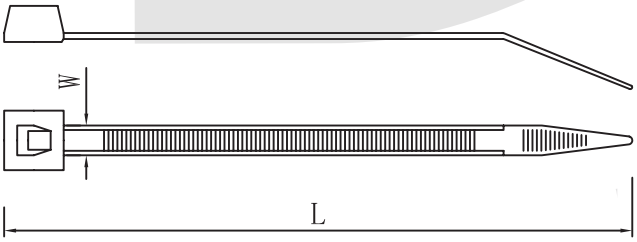



1000 pcs/bag	100 pcs/bag	Length mm(inch)	width mm(inch)	Max Bundle Dia mm(inch)	Min. Loop Tensile Strength kg(lbs)
KLS8-0901-80M	KLS8-0901-80MC	80(3.15)	2.4(.09)	15(.59)	8.0(17-5/8)
KLS8-0901-90M	KLS8-0901-90MC	90(3.54)	2.4(.09)	16(.63)	8.0(17-5/8)
KLS8-0901-100M	KLS8-0901-100MC	100(4)	2.5(.10)	22(.87)	8.1(18)
KLS8-0901-120M	KLS8-0901-120MC	120(4.72)	2.5(.10)	30(1.18)	8.1(18)
KLS8-0901-140M	KLS8-0901-140MC	140(5.51)	2.5(.10)	33(1.30)	8.1(18)
KLS8-0901-150M	KLS8-0901-150MC	150(5.9)	2.5(.10)	35(1.38)	8.1(18)
KLS8-0901-160M	KLS8-0901-160MC	160(6.3)	2.5(.10)	40(1.57)	8.1(18)
KLS8-0901-200M	KLS8-0901-200MC	200(7.87)	2.5(.10)	53(2.09)	8.1(18)
KLS8-0901-250M	KLS8-0901-250MC	250(9.84)	2.8(.11)	65(2.56)	14(31)
KLS8-0901-300M	KLS8-0901-300MC	300(11.81)	2.8(.11)	76(2.99)	14(31)
KLS8-0901-120I	KLS8-0901-120IC	121(4.76)	3.6(.14)	30(1.18)	18.2(40)
KLS8-0901-140I	KLS8-0901-140IC	140(5.51)	3.6(.14)	33(1.30)	18.2(40)
KLS8-0901-150I	KLS8-0901-150IC	150(5.91)	3.6(.14)	35(1.38)	18.2(40)
KLS8-0901-180I	KLS8-0901-180IC	180(7.09)	3.6(.14)	44(1.73)	18.2(40)
KLS8-0901-200I	KLS8-0901-200IC	200(7.87)	3.6(.14)	53(2.09)	18.2(40)
KLS8-0901-250I	KLS8-0901-250IC	250(9.84)	3.6(.14)	65(2.56)	18.2(40)

ORDER INFORMATION

KLS8 - 0901 - 80M
- Length
- Cable Ties Series
- Part Number

Cable Ties Series

KLS8-0901 Cable Ties Series

1000 pcs/bag	100 pcs/bag	Length mm(inch)	width mm(inch)	Max Bundle Dia mm(inch)	Min. Loop Tensile Strength kg(lbs)
KLS8-0901-300I	KLS8-0901-300IC	300(11.81)	3.6(.14)	76(2.99	18.2(40)
KLS8-0901-370I	KLS8-0901-370IC	370(14.57)	3.6(.14)	102(4.02)	18.2(40)
KLS8-0901-120ST	KLS8-0901-120STC	120(4.72)	4.8(.19)	24(.94)	22.2(50)
KLS8-0901-150ST	KLS8-0901-150STC	150(5.91)	4.8(.19)	35(1.38)	22.2(50)
KLS8-0901-160ST	KLS8-0901-160STC	160(6.30)	4.8(.19)	38(1.50)	22.2(50)
KLS8-0901-190ST	KLS8-0901-190STC	188(7.40)	4.8(.19)	46(1.81)	22.2(50)
KLS8-0901-200ST	KLS8-0901-200STC	200(7.87)	4.8(.19)	50(1.97)	22.2(50)
KLS8-0901-216ST	KLS8-0901-216STC	215(8.46)	4.8(.19)	53(2.09)	22.2(50)
KLS8-0901-250ST	KLS8-0901-250STC	250(9.84)	4.8(.19)	60(2.36)	22.2(50)
KLS8-0901-266ST	KLS8-0901-266STC	265(10.43)	4.8(.19)	65(2.56)	22.2(50)
KLS8-0901-280ST	KLS8-0901-280STC	280(11.02)	4.8(.19)	70(2.76)	22.2(50)
KLS8-0901-300ST	KLS8-0901-300STC	300(11.81)	4.8(.19)	76(2.99)	22.2(50)
KLS8-0901-370ST	–	370(14.57)	4.8(.19)	102(4.02)	22.2(50)
KLS8-0901-390ST	–	390(15.35)	4.8(.19)	105(4.13)	22.2(50)
KLS8-0901-430ST	–	430(16.93)	4.8(.19)	110(4.33)	22.2(50)
KLS8-0901-450ST	–	450(17.72)	4.8(.19)	116(4.57)	22.2(50)
KLS8-0901-530ST	–	530(20.87)	4.8(.19)	140(5.51)	22.2(50)
KLS8-0901-550ST	–	550(21.65)	4.8(.19)	145(5.71)	22.2(50)
KLS8-0901-635ST	–	635(25)	4.8(.19)	190(7.48)	22.2(50)
KLS8-0901-685ST	–	685(26.97)	4.8(.19)	205(8.07)	22.2(50)
KLS8-0901-730ST	–	735(28.94)	4.8(.19)	224(8.82)	22.2(50)
KLS8-0901-830ST	–	830(32.68)	4.8(.19)	254(10)	22.2(50)
KLS8-0901-150HD	–	150(5.91)	7.6(.30)	33(1.30)	54.4(120)
KLS8-0901-200HD	–	200(7.87)	7.6(.30)	50(1.97)	54.4(120)
KLS8-0901-240HD	–	240(9.45)	7.6(.30)	63(2.48)	54.4(120)
KLS8-0901-250HD	–	250(9.84)	7.6(.30)	65(2.56)	54.4(120)
KLS8-0901-300HD	–	292(11.50)	7.6(.30)	76(2.99)	54.4(120)
KLS8-0901-370HD	–	368(14.49)	7.6(.30)	102(4.02)	54.4(120)
KLS8-0901-430HD	–	430(16.93)	9.0(.35)	125(4.92)	79.4(175)
KLS8-0901-530HD	–	528(20.78)	9.0(.35)	140(5.51)	79.4(175)

Cable Ties Series

KLS8-0901 Cable Ties Series

1000 pcs/bag	100 pcs/bag	Length mm(inch)	width mm(inch)	Max Bundle Dia mm(inch)	Min. Loop Tensile Strength kg(lbs)
KLS8-0901-630HD	-	609(23.97)	9.0(.35)	178(7.00)	79.4(175)
KLS8-0901-710HD	-	710(27.95)	9.0(.35)	190(7.48)	79.4(175)
KLS8-0901-780HD	-	775(30.51)	9.0(.35)	228(8.98)	79.4(175)
KLS8-0901-830HD	-	812(31.97)	9.0(.35)	239(9.41)	79.4(175)
KLS8-0901-920HD	-	912(35.91)	9.0(.35)	263(10.35)	79.4(175)
KLS8-0901-1020HD	-	1020(40.16)	9.0(.35)	295(11.61)	79.4(175)
KLS8-0901-1070HD	-	1070(42)	9.0(.35)	320(12.60)	79.4(175)
KLS8-0901-1220HD	-	1220(48)	9.0(.35)	365(14.37)	79.4(175)
KLS8-0901-1530HD	-	1530(60.23)	9.0(.35)	460(18.15)	79.4(175)
KLS8-0901-230EHD	-	230(9.06)	12.6(.50)	50(1.97)	114(250)
KLS8-0901-290EHD	-	290(11.42)	12.6(.50)	76(2.99)	114(250)
KLS8-0901-380EHD	-	380(14.96)	12.6(.50)	106(4.17)	114(250)
KLS8-0901-480EHD	-	480(18.90)	12.6(.50)	120(4.72)	114(250)
KLS8-0901-580EHD	-	580(22.83)	12.6(.50)	152(5.98)	114(250)
KLS8-0901-730EHD	-	730(28.74)	12.6(.50)	204(8.03)	114(250)
KLS8-0901-880EHD	-	880(34.64)	12.6(.50)	248(9.76)	114(250)
KLS8-0901-1030EHD	-	1030(40.55)	12.6(.50)	295(11.61)	114(250)
KLS8-0901-290EHD	-	290(11.42)	12.6(.50)	76(2.99)	114(250)
KLS8-0901-380EHD	-	380(14.96)	12.6(.50)	106(4.17)	114(250)
KLS8-0901-480EHD	-	480(18.90)	12.6(.50)	120(4.72)	114(250)
KLS8-0901-580EHD	-	580(22.83)	12.6(.50)	152(5.98)	114(250)
KLS8-0901-730EHD	-	730(28.74)	12.6(.50)	204(8.03)	114(250)
KLS8-0901-880EHD	-	880(34.64)	12.6(.50)	248(9.76)	114(250)
KLS8-0901-1030EHD	-	1030(40.55)	12.6(.50)	295(11.61)	114(250)

Cable Ties Series

KLS8-0903 Mountable Head Cable Ties Series

Material : UL Approved Nylon6/6, 94V-2
The cable tie can be secured to panel with panel with a single bolt.

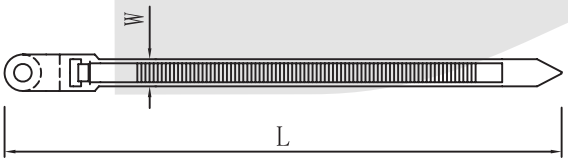



Part NO. 100pcs/bag	Part NO. 1000pcs/bag	Length mm(inch)	Width mm(inch)	Max. Bundle Dia mm(inch)	Min. Loop Tensile Strength kg(lbs)
KLS8-0903-110MC	KLS8-0903-110M	110(4.33)	2.5(.10)	22(.87)	8.1(18)
KLS8-0903-150IC	KLS8-0903-150I	150(5.91)	3.6(.14)	32(1.26)	18.2(40)
KLS8-0903-200STC	KLS8-0903-200ST	200(7.87)	4.8(.19)	50(1.97)	22.2(50)
KLS8-0903-300STC	KLS8-0903-300ST	319(12.56)	4.8(.19)	76(2.99)	22.2(50)
KLS8-0903-370ST	-	389(15.31)	4.8(.19)	105(4.13)	22.2(50)
KLS8-0903-200HD	-	215(8.46)	7.6(.30)	50(1.97)	54.4(120)
KLS8-0903-300HD	-	305(12.01)	7.6(.30)	76(2.99)	54.4(120)
KLS8-0903-380HD	-	375(14.76)	7.6(.30)	98(3.86)	54.4(120)

ORDER INFORMATION

KLS8 - 0903 - 110MC

- 110MC — Length
- 0903 — Mountable Head Cable Ties Series
- KLS8 — Part Number

Cable Ties Series

KLS8-0905A Marker Ties Series

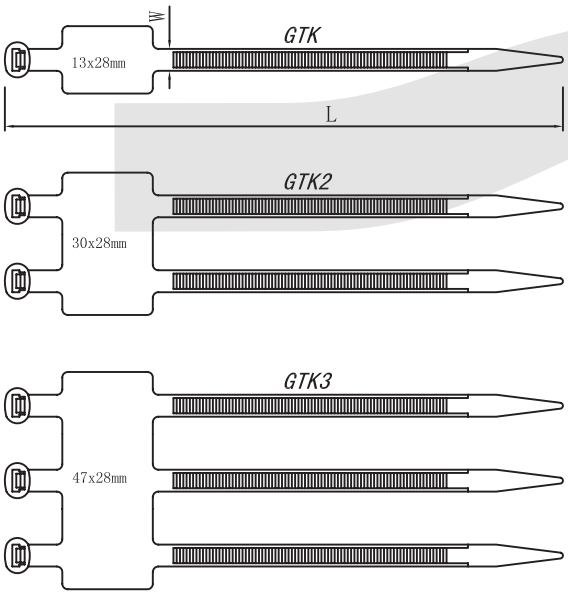

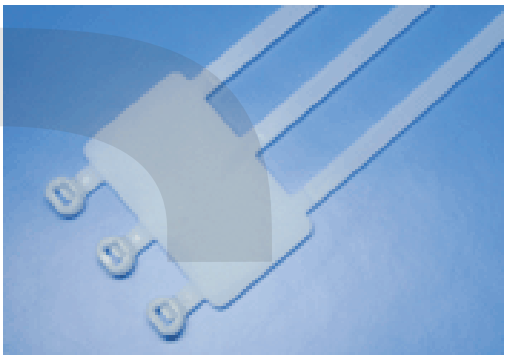

Material:UL Approved Nylon 6/6,94V-2
Color:Nature
Function:Tie and identity bundles of cable in one operation. Flat areas may be imprinted or written on with a Marking Pen.

Part NO. 100pcs/bag	Part NO. 1000pcs/bag	Length mm(inch)	Width mm(inch)	Max Bundle Dia. mm(inch)	Min.Loop Tensile Strength kg (lbs)
KLS8-0905A-GTK-190STC	KLS8-0905A-GTK-190ST	190(7.48)	4.8(.19)	46(1.81)	22.2(50)
KLS8-0905A-GTK-220STC	KLS8-0905A-GTK-220ST	220(8.66)	4.8(.19)	54(2.13)	22.2(50)
KLS8-0905A-GTK-270STC	KLS8-0905A-GTK-270ST	270(10.63)	4.8(.19)	65(2.56)	22.2(50)
KLS8-0905A-GTK-300STC	KLS8-0905A-GTK-300ST	300(11.81)	4.8(.19)	76(2.99)	22.2(50)
KLS8-0905A-GTK-370STC	KLS8-0905A-GTK-370ST	370(14.57)	4.8(.19)	102(4.02)	22.2(50)
KLS8-0905A-GTK2-220ST	-	220(8.66)	4.8(.19)	54(2.13)	22.2(50)
KLS8-0905A-GTK2-270ST	-	270(10.63)	4.8(.19)	65(2.56)	22.2(50)
KLS8-0905A-GTK2-300ST	-	300(11.81)	4.8(.19)	76(2.99)	22.2(50)
KLS8-0905A-GTK2-370ST	-	370(14.57)	4.8(.19)	102(4.02)	22.2(50)
KLS8-0905A-GTK3-220ST	-	220(8.66)	4.8(.19)	54(2.13)	22.2(50)
KLS8-0905A-GTK3-270ST	-	270(10.63)	4.8(.19)	65(2.56)	22.2(50)
KLS8-0905A-GTK3-300ST	-	300(11.81)	4.8(.19)	76(2.99)	22.2(50)
KLS8-0905A-GTK3-370ST	-	370(14.57)	4.8(.19)	102(4.02)	22.2(50)

ORDER INFORMATION

KLS8 - 0905A - 190STC
- 190STC: Length
- 0905A: Marker Ties Series
- KLS8: Part Number

Cable Ties Series

KLS8-0905B Marker Ties Series

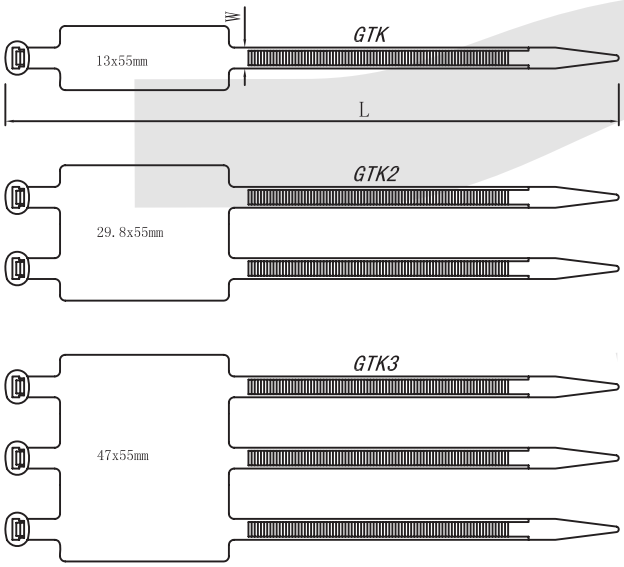

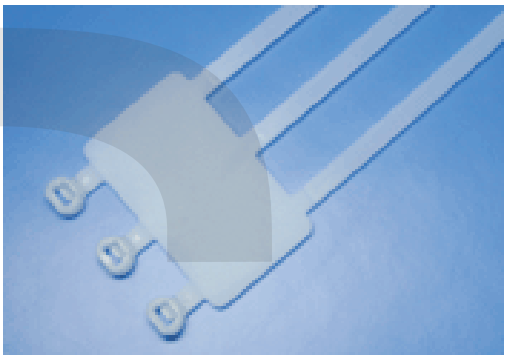

Material:UL Approved Nylon 6/6,94V-2
Color:Nature
Function:Tie and identity bundles of cable in one operation. Flat areas may be imprinted or written on with a Marking Pen.

Part NO. 100pcs/bag	Part NO. 1000pcs/bag	Length mm(inch)	Width mm(inch)	Max Bundle Dia. mm(inch)	Min.Loop Tensile Strength kg (lbs)
KLS8-0905BGTK-220STLC	KLS8-0905BGTK-220STL	220(8.66)	4.8(.19)	54(2.13)	22.2(50)
KLS8-0905BGTK-270STLC	KLS8-0905BGTK-270STL	270(10.63)	4.8(.19))	65(2.56)	22.2(50)
KLS8-0905BGTK-300STLC	KLS8-0905BGTK-300STL	300(11.81)	4.8(.19)	76(2.99)	22.2(50)
KLS8-0905BGTK-370STL	-	370(14.57)	4.8(.19)	102(4.02)	22.2(50)
KLS8-0905BGTK2-220STL	-	220(8.66)	4.8(.19)	54(2.13)	22.2(50)
KLS8-0905BGTK2-270STL	-	270(10.63)	4.8(.19)	65(2.56)	22.2(50)
KLS8-0905BGTK2-300STL	-	300(11.81)	4.8(.19)	76(2.99)	22.2(50)
KLS8-0905BGTK2-370STL	-	370(14.57)	4.8(.19)	102(4.02)	22.2(50)
KLS8-0905BGTK3-220STL	-	220(8.66)	4.8(.19)	54(2.13)	22.2(50)
KLS8-0905BGTK3-270STL	-	270(10.63)	4.8(.19)	65(2.56)	22.2(50)
KLS8-0905BGTK3-300STL	-	300(11.81)	4.8(.19)	76(2.99)	22.2(50)
KLS8-0905BGTK3-370STL	-	370(14.57)	4.8(.19)	102(4.02)	22.2(50)

ORDER INFORMATION

KLS8 - 0905B - 220STLC
- 220STLC — Length
- 0905B — Marker Ties Series
- KLS8 — Part Number

Cable Ties Series

KLS8-0907 Releasable Cable Ties Series

Material:UL Approved Nylon 6/6,94V-2
Color:Nature,Black
Easily assembled by hand or with pliers,releasable,reusable



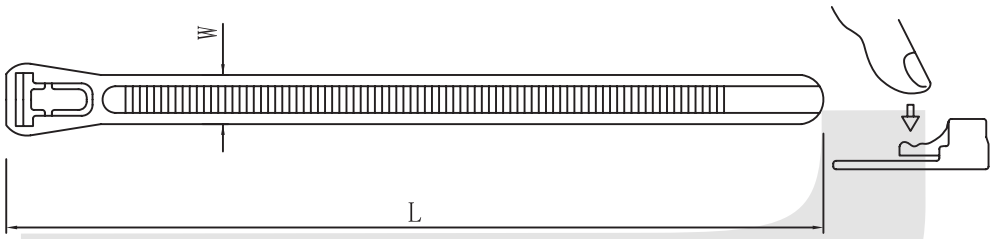

Part NO. 100pcs/bag	Length Mm(inch)	Width mm(inch)	Max Bundle Dia. Mm(inch)	Min.Loop Tensile Strength Kg (lbs)
KLS8-0907-100HD	100(3.94)	7.6(.30)	20(.79)	22.2(50)
KLS8-0907-120HD	120(4.72)	7.6(.30)	30(1.18)	22.2(50)
KLS8-0907-150HD	150(5.91)	7.6(.30)	35(1.38)	22.2(50)
KLS8-0907-200HD	200(7.87)	7.6(.30)	50(1.97)	22.2(50)
KLS8-0907-250HD	250(9.84)	7.6(.30)	66(2.60)	22.2(50)
KLS8-0907-300HD	300(11.81)	7.6(.30)	80(3.15)	22.2(50)
KLS8-0907-370HD	370(14.57)	7.6(.30)	102(4.02)	22.2(50)

ORDER INFORMATION

KLS8 - 0907 - 100HD

- 100HD — Length
- 0907 — Releasable Cable Ties Series
- KLS8 — Part Number

Cable Ties Series

KLS8-0908 Releasable Cable Ties Series

Material:UL Approved Nylon 6/6,94V-2
Color:Nature,Black
Easily assembled by hand or with pliers,releasable,reusable

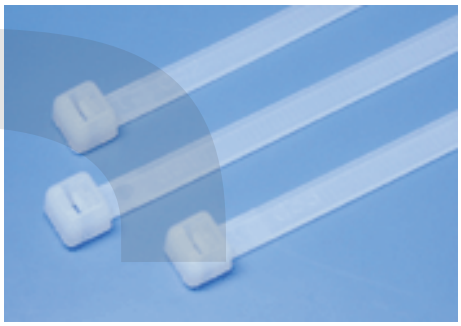

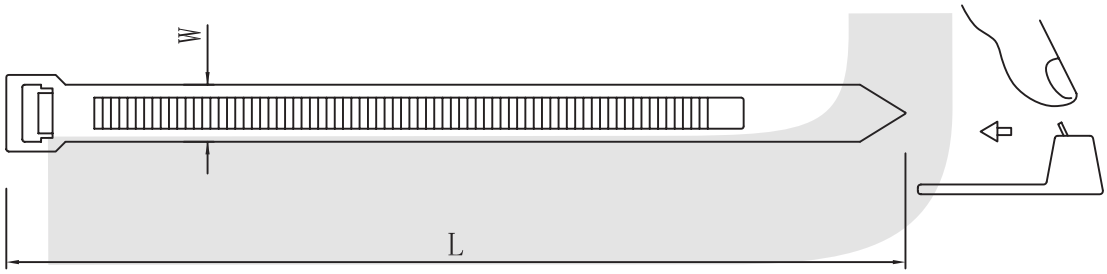

Part NO. 100pcs/bag	Part NO. 1000pcs/bag	Length mm(inch)	Width mm(inch)	Max Bundle Dia. mm(inch)	Min.Loop Tensile Strength Kg (lbs)
KLS8-0908-140IC	KLS8-0908-140I	140(5-1/2)	3.6(0.14)	33(1-3/8)	18.2(40)
KLS8-0908-200STC	KLS8-0908-200ST	188(7-7/8)	4.8(0.19)	50(2)	22.2(50)
KLS8-0908-300STC	KLS8-0908-300ST	300(11-4/5)	4.8(0.19)	76(3)	22.2(50)
KLS8-0908-300ST	-	370(14-1/2)	4.8(0.19)	102(4)	22.2(50)

ORDER INFORMATION

KLS8 - 0908 - 140IC
- 140IC: Length
- 0908: Releasable Cable Ties Series
- KLS8: Part Number

Cable Ties Series

KLS8-0913 Cord Band Series

Material:Polyethylene PE
Color:Clear,Black
Wrap electrical cords for shipping and packaging.
Inexpensive and Releasible

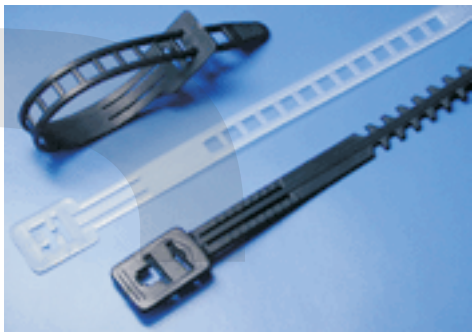

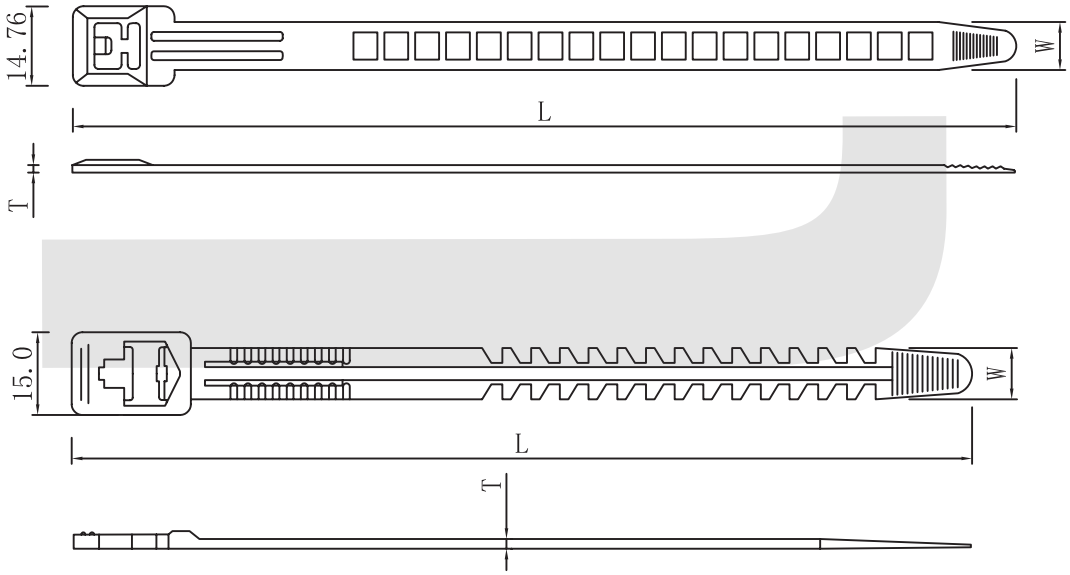

Part NO. 100pcs/bag	Length mm(inch)	Width mm(inch)	Thickness mm(inch)
KLS8-0913-3	178(7.00)	9(0.36)	1.3(0.05)
KLS8-0913-4	14(5.83)	9(0.36)	1.3(0.05)
KLS8-0913-5	160(6.29)	9(0.36)	1.14(0.04)

ORDER INFORMATION

KLS8 - 0913 - 3

- 3 — Length
- 0913 — Cord Band Series
- KLS8 — Part Number

Cable Ties Series

KLS8-0917 Double Locking Cable Ties Series

Prolongs useful life of cable tie under sunshine/outdoor application.

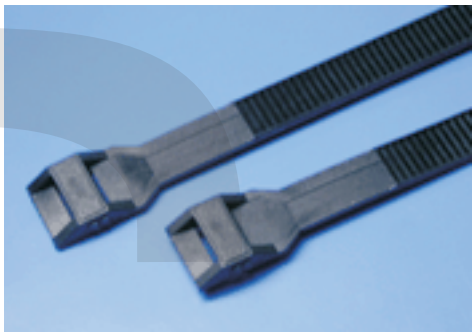

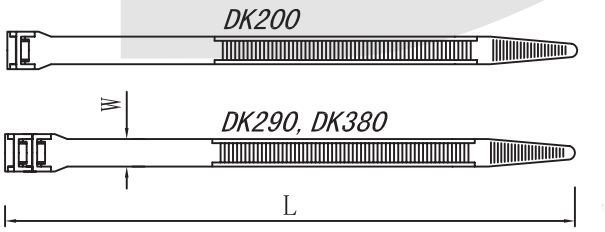

KLS8-0917-DK-200

Part NO. 100pcs/bag	Length mm(inch)	Width mm(inch)	Thick mm(inch)	Max Bundle Dia. mm(inch)	Min. Loop Tensile Strength Kg (lbs)
KLS8-0917-DK-200-115HDB	115	6	2	22	35
KLS8-0917-DK-200-180HDB	180	6.0	2	40	35

KLS8-0917-DK-290, GK-380

Part NO. 100pcs/bag	Length mm(inch)	Width mm(inch)	Thick mm(inch)	Max Bundle Dia. mm(inch)	Min. Loop Tensile Strength Kg (lbs)
KLS8-0917-180HDB	180(7.09)	8.6(.399)	2.0(.079)	40(1.57)	35(77)
KLS8-0917-260HDB	260(10.24)	8.6(.399)	2.0(.079)	53(2.09)	50(110)
KLS8-0917-360HDB	355(13.98)	8.6(.399)	2.0(.079)	83(3.27)	50(110)

ORDER INFORMATION

KLS8 - 0917 - DK200-115HDB

- Length
- DK200: Single Locking Cable Ties
  DK290\DK380: Double Locking Cable Ties Series
- Part Number

Cable Ties Series

KLS8-0920 Push Mount Ties Series

Material:UL Approved Nylon 6/6,94V-2,Acid and corrode resisting,insulate,last long and not apt to age.
Usage:insert tie to the hole of table and tighten it.

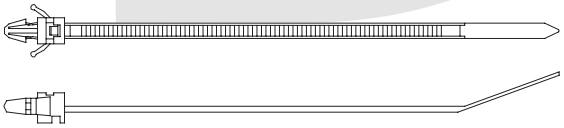



Part NO. 100pcs/bag	Part NO. 1000pcs/bag	Length mm(inch)	Width mm(inch)	Max Bundle Dia. mm(inch)	Min.Loop Tensile Strength Kg (lbs)
KLS8-0920-130STC	KLS8-0920-130ST	130(5.12)	4.8(.19)	25(.98)	22.2(50)
KLS8-0920-150STC	KLS8-0920-150ST	150(5.91)	4.8(.19)	31(1.22)	22.2(50)
KLS8-0920-170STC	KLS8-0920-170ST	170(6.69)	4.8(.19)	38(1.50)	22.2(50)
KLS8-0920-190STC	KLS8-0920-190ST	190(7.68)	4.8(.19)	45(1.77)	22.2(50)
KLS8-0920-110MC	KLS8-0920-110M	110(4.33)	2.5(.10)	22(.87)	8.1(18)
KLS8-0920-100MAC	KLS8-0920-100MA	110(4.33)	2.5(.10)	22(.87)	8.1(18)
KLS8-0920-130IC	KLS8-0920-130I	130(5.12)	3.2(.13)	28(1.10)	13.6(30)
KLS8-0920-150IC	KLS8-0920-150I	150(5.91)	3.6(.14)	32(1.26)	13.6(30)
KLS8-0920-200STC	KLS8-0920-200ST	200(7.87)	4.8(.19)	46(1.81)	22.2(50)
KLS8-0920-130IMC	KLS8-0920-130IM	130(5.12)	3.2(.13)	28(1.10)	13.6(30)

ORDER INFORMATION

KLS8 - 0920 - 130STC

- 130STC — Length
- 0920 — Push Mount Ties Series
- KLS8 — Part Number

Cable Ties Series

KLS8-0924 Double Cable Ties Series

Material :UL Approved Nylon 6 / 6 ,94V-2
Color :Nature,Black
Tie two setscable at same time, save more space for management.



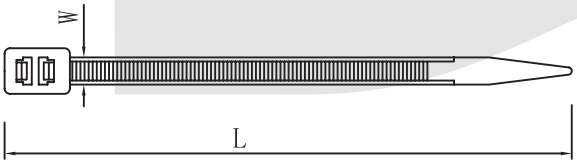

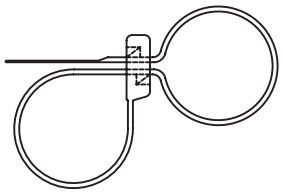

Part NO. 1000pcs/bag	Length mm(inch)	Width mm(inch)	Max Bundle Dia. mm(inch)	Min Bundle Dia. mm(inch)	Min. Loop Tensile Strength Kg (lbs)
KLS8-0924-200ST	200(7.87)	4.8(.19)	47(1.85) 45(1.77)	2.5(.10) 2.0(.08)	22.2(50)
KLS8-0924-300ST	300(11.81)	4.8(.19)	72(2.83) 70(2.76)	2.5(.10) 2.0(.08)	22.2(50)
KLS8-0924-370ST	372(14.65)	4.8(.19)	100(3.94) 97(3.82)	2.5(.10) 2.0(.08)	22.2(50)

ORDER INFORMATION

KLS8 - 0924 - 200ST

- 200ST — Length
- 0924 — Double Cable Ties Series
- KLS8 — Part Number

Cable Ties Series

KLS8-0926 Bead Ties Series

Material:PE or Nylon 6/6,94V-2(V-0 Available)
Color:Nature
Easy to install and release.

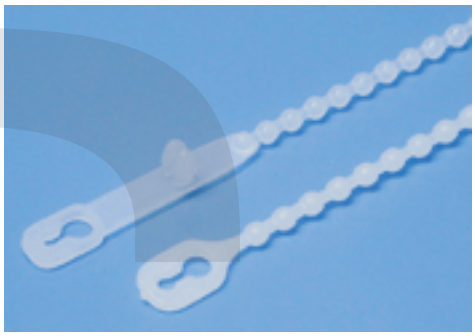

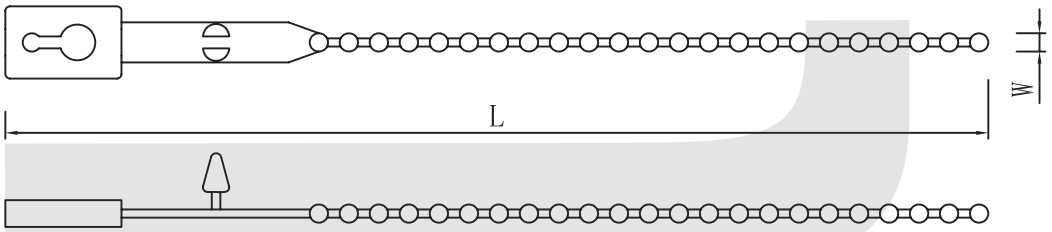

Part NO. 1000pcs/bag	Length mm(inch)	Width mm(inch)	Max Bundle Dia. mm(inch)	Min.Loop Tensile Strength Kg (lbs)
KLS8-0926-100	107(4.21)	2.3(.09)	29(1.14)	4(8.8)
KLS8-0926-6A	106(4.17)	2.3(.09)	18.3(0.72)	4(8.8)
KLS8-0926-90	93(3.66)	2.3(.09)	25(.98)	4(8.8)

ORDER INFORMATION

KLS8 - 0926 - 100

- 100 — Length
- 0926 — Bead Ties Series
- KLS8 — Part Number

Cable Ties Series

KLS8-0928 Air Conditioner Tube Ties Series

MATERIAL :LDPE
Color :Nature
Special for fixing air condition tube.

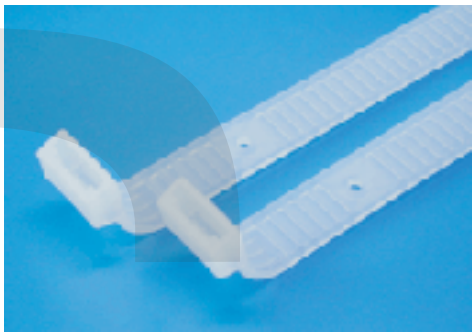

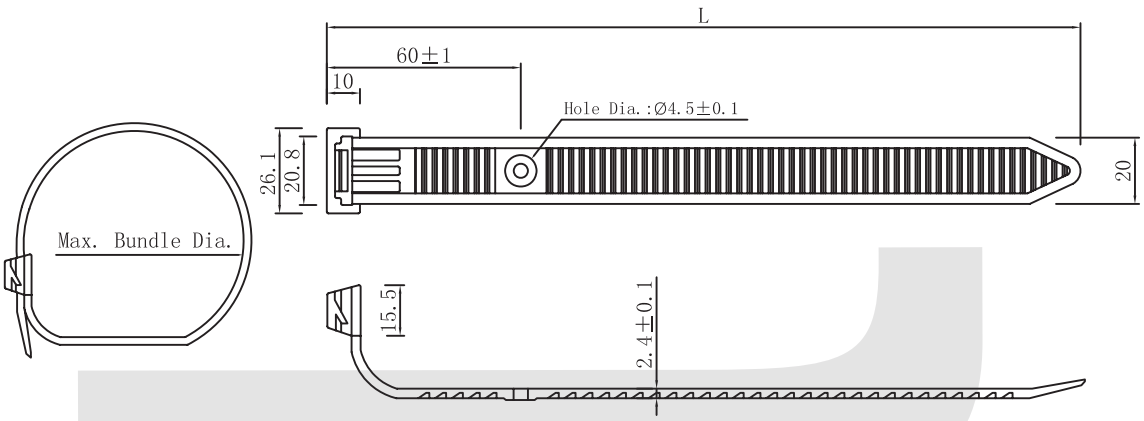

Part No.	L mm(inch)	Max. Bundle Dia. mm(inch)	Min. Loop Tensile Strength kg(lbs)	Package
KLS8-0928-250	235(9.25)	73(2.87)	20(44)	100
KLS8-0928-290	275(10.82)	85(3.35)	20(44)	100

ORDER INFORMATION

KLS8 - 0928 - 250

- 250 — Length
- 0928 — Air Conditioner Tube Ties Series
- KLS8 — Part Number

Cable Ties Series

KLS8-0929 Knot Ties Series

Material:PE
Color:Black
Tie power cord for collection and package,extra heavy tensile strength for Electrical and Machine



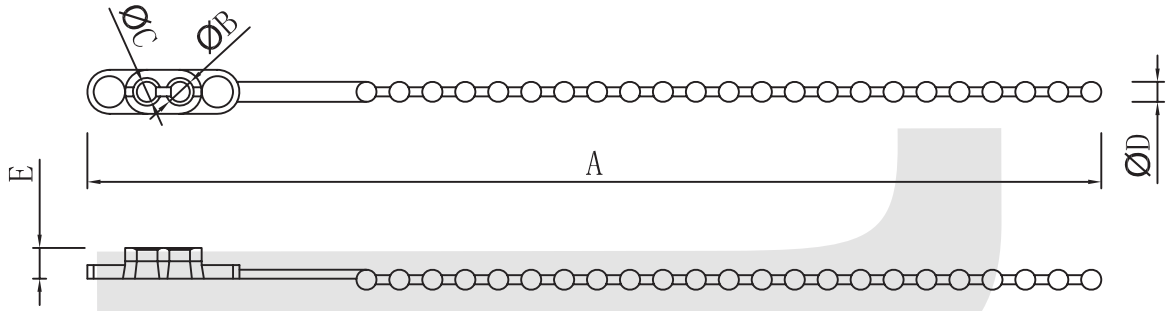

PARTNO.	A (mm)	B (mm)	C (mm)	D (mm)	E (mm)
KLS8-0929-160B	163.2	Φ3.9	Φ3.3	Φ3.9	6.3

ORDER INFORMATION

KLS8 - 0929 - 160B

- 160B: Length
- 0929: Knot Ties Series
- KLS8: Part Number

Cable Ties Series

KLS8-0930 Stainless Steel Cable Ties Series

Material:#301 Stainless and Material:#410 Stainless
Thickness:0.3 mm and 0.5mm



Part No. 100pcs/bag	Length mm(inch)	Width mm(inch)	Max. Bundle Dia. mm(inch)	Min. Loop Tensile Strength
KLS8-0930-130ST	129(5.08)	4.5(.18)	33(1.3)	46(101.2)
KLS8-0930-200ST	200(7.87)	4.5(.18)	50(1.97)	46(101.2)
KLS8-0930-300ST	300(11.81)	4.5(.18)	76(2.99)	46(101.2)
KLS8-0930-370ST	370(14.57)	4.5(.18)	102(4.02)	46(101.2)
KLS8-0930-200HD	197(7.76)	7.94(.31)	50(1.97)	114(250.8)
KLS8-0930-300HD	300(11.81)	7.94(.31)	76(2.99)	114(250.8)
KLS8-0930-370HD	368(14.49)	7.94(.31)	102(4.02)	114(250.8)
KLS8-0930-450HD	450(17.72)	7.94(.31)	135(5.31)	114(250.8)
KLS8-0930-500HD	500(19.69)	7.94(.31)	150(5.93	114(250.8)

ORDER INFORMATION

KLS8 - 0930 - 130ST

- 130ST — Length
- 0930 — Stainless Steel Cable Ties Series
- KLS8 — Part Number

Cable Ties Series

KLS8-0921 Spiral Wrapping Band Series

Material : PE
Usage : Use suitable length and fixed in one end by cable tie then wrap in direction of clockwise.
Feature : Strong tensible, won't change shape after second usage, special color is available.

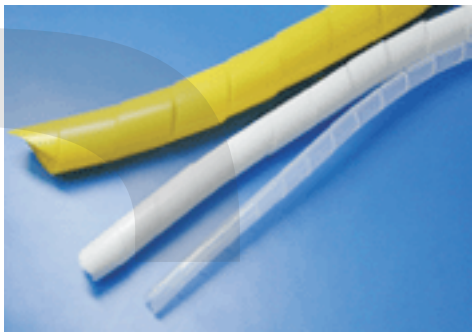

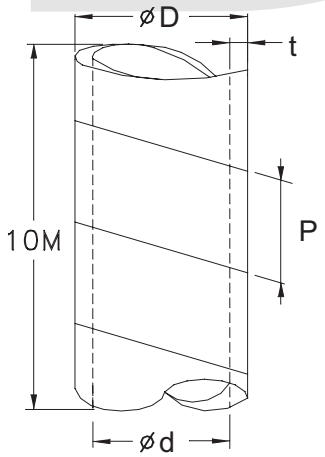

Part No.	d (mm)	D (mm)	P (mm)	t (mm)	Bundle range	Packing
KLS8-0921-KS-3	1.5	3.0	5.0	0.4	1.5-18	10M
KLS8-0921-KS-4	4.0	6.0	7.0	0.6	10-50	10M
KLS8-0921-KS-7	3.2	6.2	8.5	0.6	4-50	10M
KLS8-0921-KS-8	8.0	10.0	11.4	0.8	20-60	10M
KLS8-0921-KS-9	9.0	12.0	13.9	0.85	20-65	10M
KLS8-0921-KS-12	12.0	15.0	15.0	1.0	20-70	10M
KLS8-0921-KS-13	8.5	12.5	11.4	0.85	9-65	10M
KLS8-0921-KS-15	15.0	19.0	18.2	1.2	25-100	10M
KLS8-0921-KS-20	20.0	24.0	19.6	1.5	30-130	10M

ORDER INFORMATION

KLS8 - 0921 - KS-3

- KS-3: Length
- 0921: Spiral Wrapping Band Series
- KLS8: Part Number

Cable Clamp Series

KLS8-0408 (PUSH TIE MOUNT)

Material : UL Approved Nylon66, 94V-2
Color : Nature
Fix wires on board.Easy to maintenance.Do not take up spaces.
Drill 6.2mm hole on board to fix tie mount and then insert tie into the mount for bundling cables.



Unit : mm

Item No.	T	Mounting Hole	Packing
PHC-4	3.8	4.8	100pcs
PHC-5	5	7.6	
PHC-6.5	6.5	8.5	
PHC-8	8.1	6.2	
PHC-9	9.4	7.9	
PHC-1509	7.8	4.5	

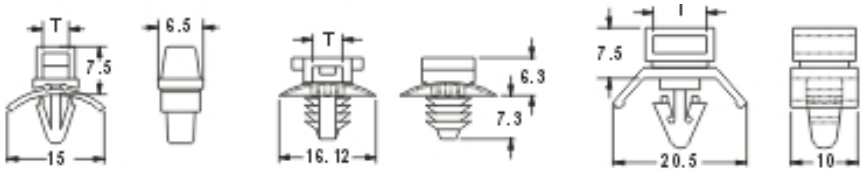

PHC-4 PHC-5 PHC-8

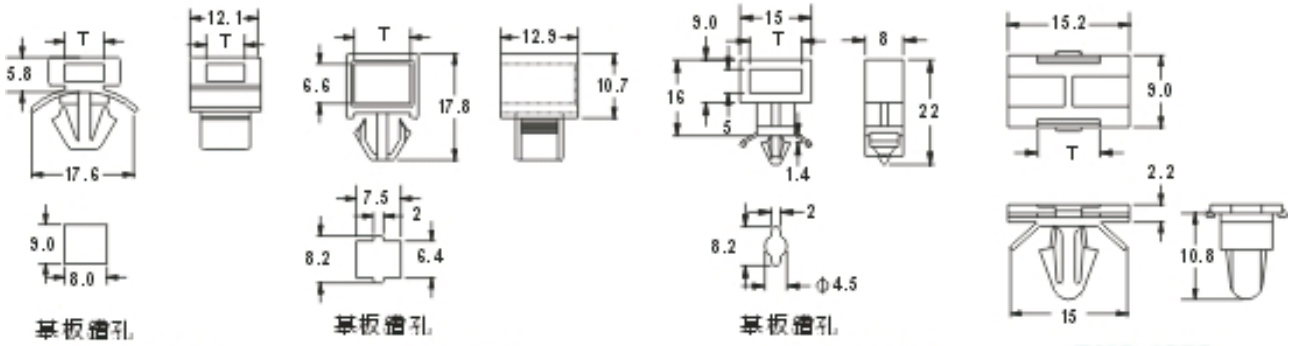

PHC-6.5 PHC-9 PHC-1105 PHC-1509

Order Information

Product No.: KLS8-0408

Pos. No.

PUSH TIE MOUNT Series

Cable Clamp Series

KLS8-0412 (ADJUSTABLE CABLE CLAMP)

Material: UL approved Natural NYLON 66, 94V-2

Unit : mm

Item No.	A	B	C	L / Max.Bundle Dia	Packing
ATC-17	25.0	18.0	7.9	70 / 17.0	100pcs
ATC-22	30.5	21.0	12.0	90 / 22.0	
ATC-26	30.5	21.0	12.0	108 / 26.0	



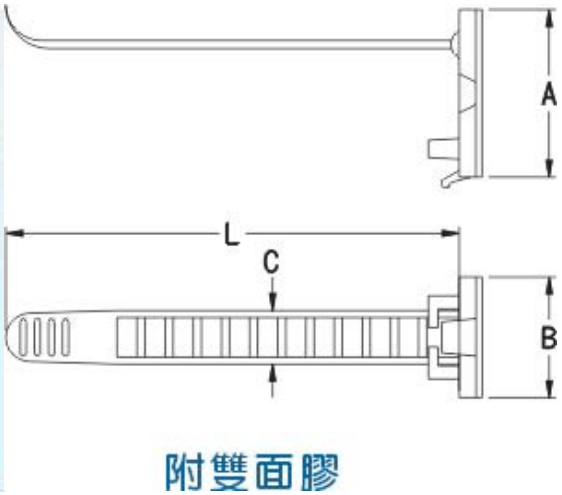

Order Information

Product No.: KLS8-0412

Pos. No.

ADJUSTABLE CABLE CLAMP Series

Cable Clamp Series

KLS8-0415 (SELF-ADHESIVE WIRE CLIP)

Material: UL approved Natural Nylon 66, 94V-2. (Backed with Adhesive tape)
Self-adhesive wire clip is designed to support light weight wire bundles when properly applied on any clear, smooth, grease-free surface.
Color: Natural

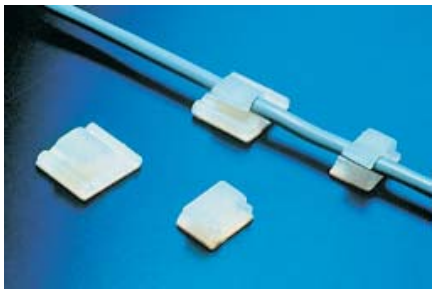

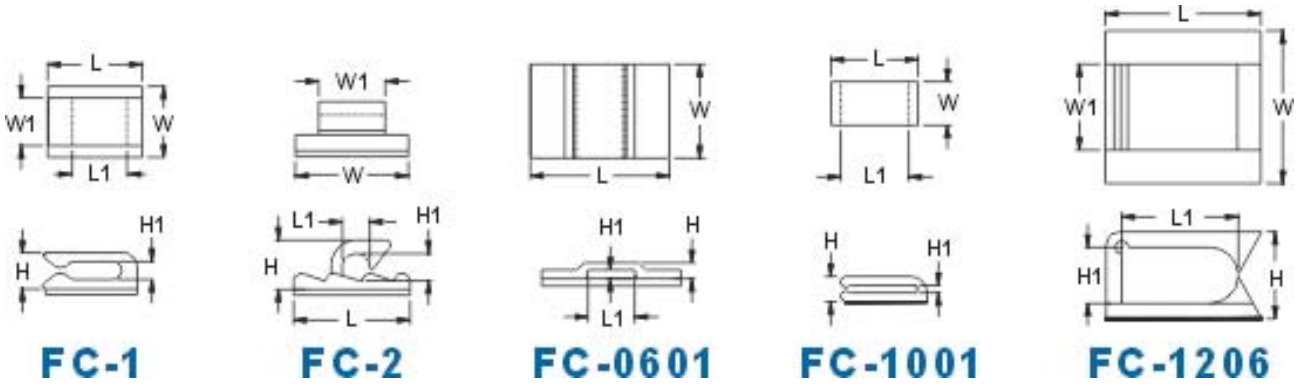

FC-1 FC-2 FC-0601 FC-1001 FC-1206

Unit: mm

Item No.	L	L1	W	W1	H	H1	Packing
FC-1	13.0	9.0	9.5	6.5	5.2	2.8	100pcs
FC-2	16.0	4.0	15.5	9.0	6.8	4.0	
FC-1001	11.9	9.3	6.0	=	3.5	1.0	
FC-1206	16.0	11.9	15.8	8.9	9.0	5.8	

Order Information

Product No.: KLS8-0415

Pos. No.

SELF-ADHESIVE WIRE CLIP Series

Cable Clamp Series

KLS8-0417 (SELF-ADHESIVE WIRE CLIP)



Material: UL approved Natural Nylon 66, 94V-2. (Backed with Adhesive tape)
Color: Natural

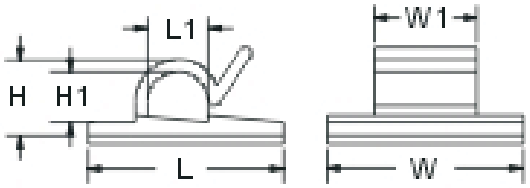

FC-0605

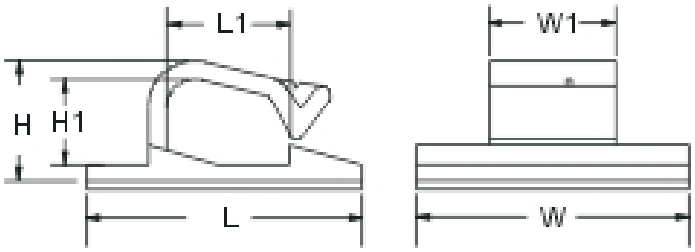

FC-1208

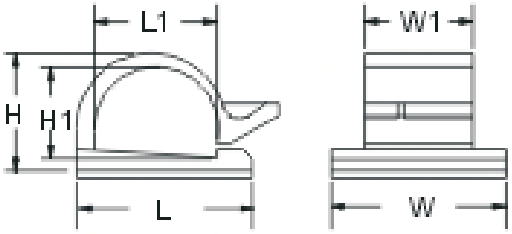

FC-1813

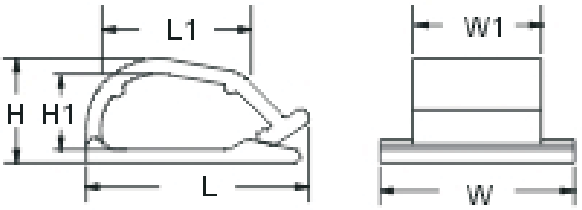

FC-2211

Unit: mm

Item No.	L	L1	W	W1	H	H1	Packing
PC-0605	19.0	5.9	19	10.0	7.2	4.9	100pcs
PC-1208	26.8	11.9	26.5	12.3	11.7	8.3	
PC-1813	25.6	17.8	25.5	15.8	17.2	13.3	
PC-2211	32.5	22.2	28.3	18.7	15.2	11.1	

Order Information

Product No.: KLS8-0417

Pos. No.

SELF-ADHESIVE WIRE CLIP Series

Cable Clamp Series

KLS8-0424 (SELF-ADHESIVE WIRE CLIP)



Material: UL approved Natural Nylon 66, 94V-2. (Backed with Adhesive tape)
Color: Natural

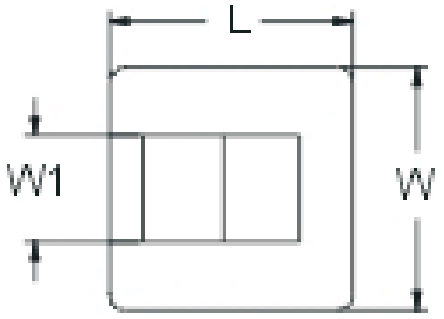

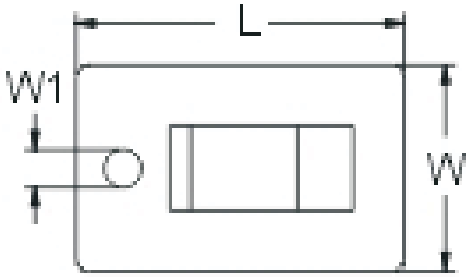

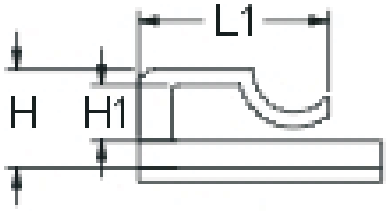

FC-3

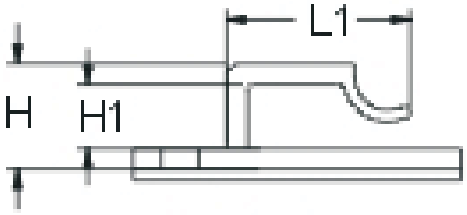

FC-4

Unit: mm

Item No.	L	L1	W	Aperture /W1	H	H1	Packing
FC-3	16	12.5	16	0 / 8.8	8.7	3.7	100pcs
FC-4	25	14.8	16	3.1/8.8	5.5	4.2	
FC-5	27	14.8	17	3.1/8.8	8.7	6.0	

Order Information

Product No.: KLS8-0424

Pos. No.

SELF-ADHESIVE WIRE CLIP Series

Cable Clamp Series

KLS8-0426

Material : UL Approved Nylon66, 94V-2
Color : Nature
Easy Mounting with adhesive tape.





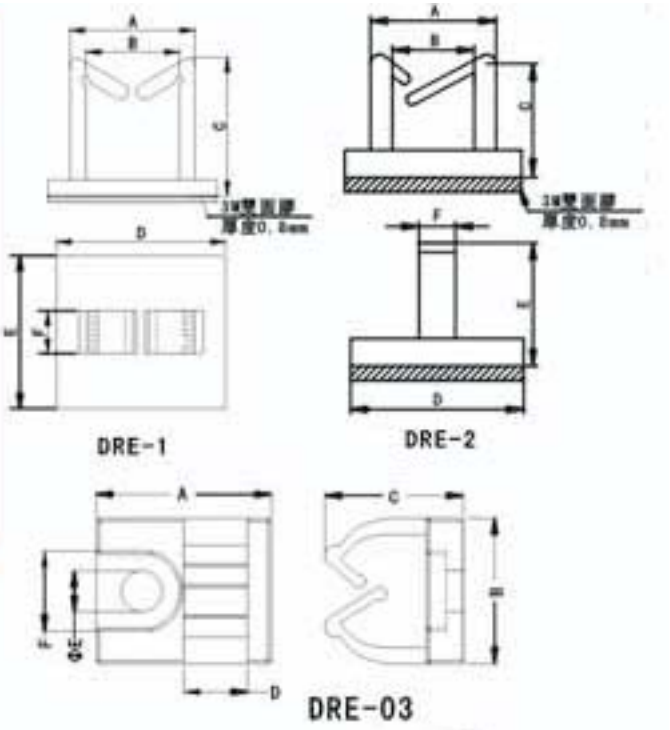

單位：mm

型 號 Item No.	A	B	C	D	E	F	包 裝 Packing
DRE-01	15.5	11.6	17.2	21.0	19.0	5.3	100pcs
DRE-02	6.9	4.5	4.7	9.5	6.7	2.0	
DRE-03	10.7	8.9	8.4	3.9	2.5	4.9	

材　　質：UL合格之NYLON66(本色)，防火等級94V-2。
使用方法：背膠式，固定電線於機器中，整齊完美。

Cable Clamp Series

KLS8-0211

- Material: UL approved Nylon 66, 94V-2.
- Color: Natural, available in other colors.
- To be fixed by 2 sets of 3mm flat-head screw.
- BT-90A,BT-155A,BT-160A with snap in design



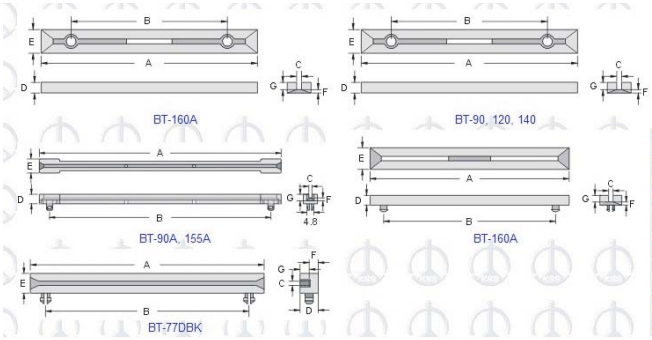

Unit : mm

Item No.	A	B	C	D	E	F	G	Packing
BT-90A	89.5	77.5	2.0	4.5	9.5	1.5	3.0	100 pcs / Bag
BT-90	89.5	64.4	2.0	4.5	9.5	1.5	3.0	
BT-120	119.0	94.5	2.0	4.5	9.5	1.5	3.0	
BT-140	141.0	115.4	2.0	4.5	9.5	1.5	3.0	
BT-155A	154.0	141.0	2.0	4.6	6.5	1.3	3.3	
BT-160	160.5	134.5	2.0	4.5	9.5	1.5	3.0	
BT-160A	163.0	149.5	2.0	6.5	9.5	2.2	2.3	

KLS8-0211B (CIRCUIT BOARD TRACK)

Material: UL approved Nylon 66, 94V-2

Unit:mm

Model No.	A	B	Packaging
CG-250	63.5	50.8	250
CG-300	76.2	63.5	
CG-350	88.9	76.2	
CG-400	101.6	88.9	
CG-450	114.3	101.6	
CG-500	127.0	114.3	
CG-550	139.7	127.0	
CG-600	152.4	139.7	



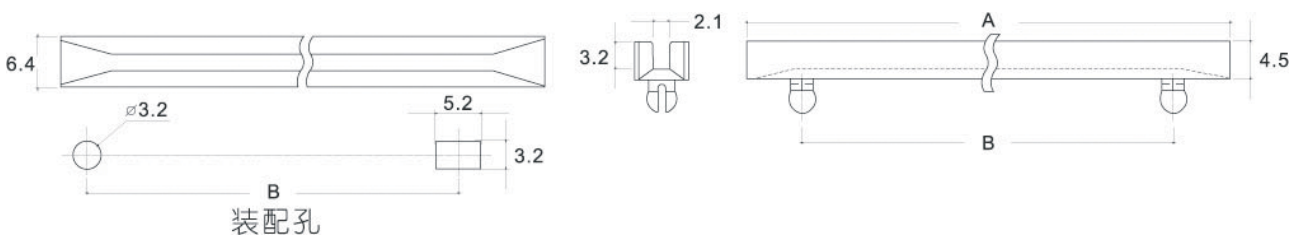

Cable Clamp Series

KLS8-0231 (CIRCUIT BOARD TRACK)

Material: UL approved Nylon 66, 94V-2



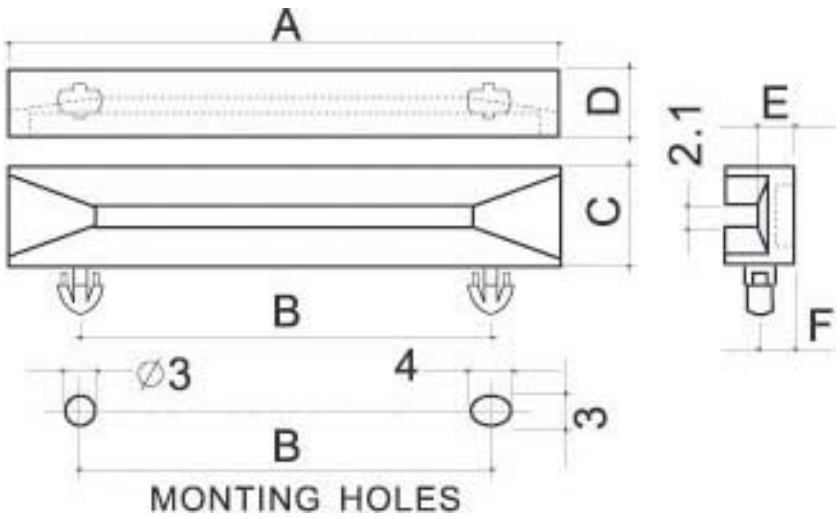

Unit:mm

Model No.	A	B	C	D	E	F		Packaging
BCL-40A	38.4	20.0	9.2	6.4	3.4	3.2		500
BCL-40B	38.4	20.0	9.2	6.4	3.4	3.2		
BCL-40C	40.0	20.0	8.0	6.0	3.0	3.0		
BCL-50A	51.0	38.2	9.2	6.4	3.4	3.2		
								250
BCL-80A	81.0	60.0	8.0	6.0	3.0	3.0		
BCL-80B	81.0	60.0	8.0	6.0	3.0	3.0		
BCL-80C	81.0	60.0	8.0	6.0	3.0	3.0		
BCL-90A	91.5	71.0	8.0	6.0	3.0	3.0		
BCL-90B	91.5	71.0	8.0	6.0	3.0	3.0		

KLS8-0425 (LADDER TYPE CABLE HOLDER)

Material: UL approved grey Nylon 66, 94V-2

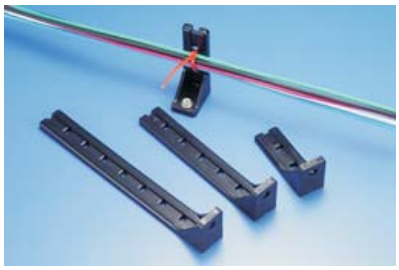

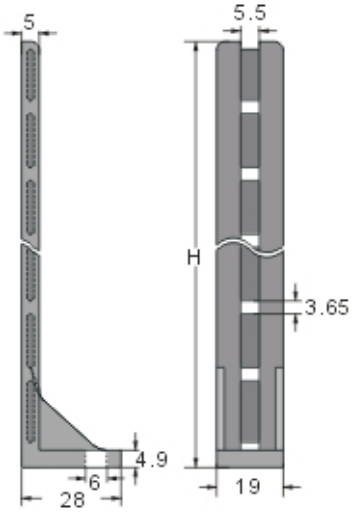

Item No.	L	W	H	Packing
LCH-60BK	28	19	60	50pcs
LCH-120BK	28	19	120	
LCH-160BK	28	19	160	

Cable Clamp Series

KLS8-0427 (CABLE CLAMP)

- Material: Made of finest PVC backed with quality adhesive tape.
- Color: Grey.



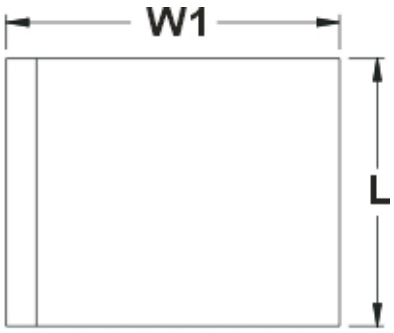

Item No.	L	W1	W2	Packing
CL-15	15	18.5	16	100pcs
CL-20	20	18.5	16	
CL-25	25	18.5	16	
CL-28	28	18.5	16	

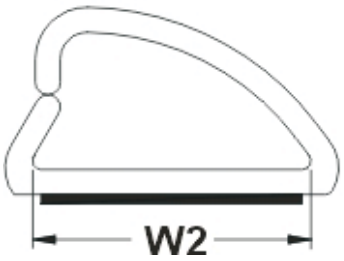

KLS8-0428 (CABLE CLAMP)

- Material: Made of finest PVC backed with quality adhesive tape.
- Color: Grey.

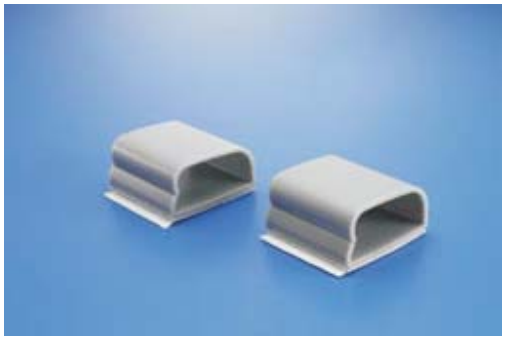

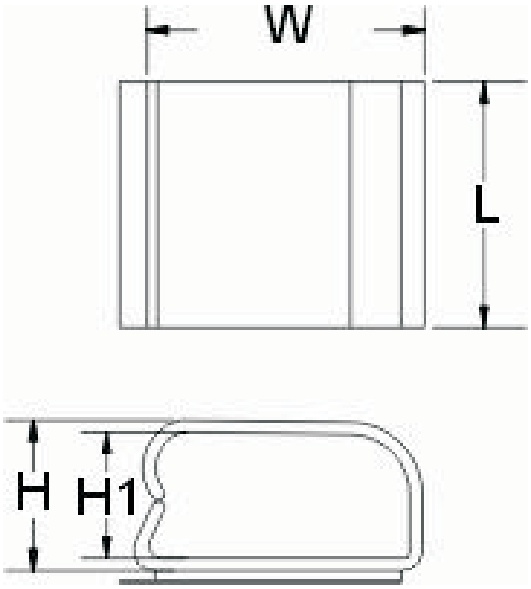

Item No.	L	W	H/H1	Packing
RCL-12	25.4	28.5	13.8/11.4	100pcs

Cable Clamp Series

KLS8-0310 (WIRE HOLDERS)

Material : UL Approved Nylon66, 94V-2
Mounting Hold Diameter:Ø4.8±0.1mm
Assures precision routing
Lifts wires off board to avoid hot components and minimize transient interference.



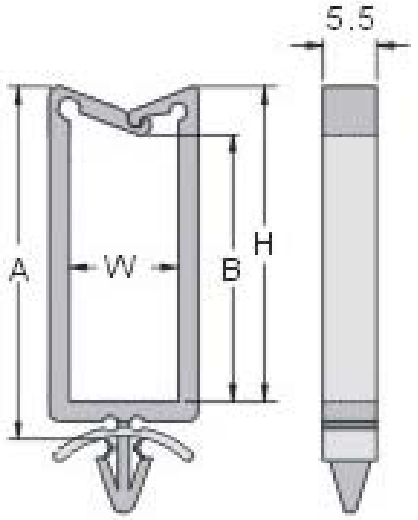

Unit: mm

Item No.	Dimension				PCB		Packing
	H	A	B	W	hole	thickness	
KWS-0	9.0	13.0	4.0	11.0	4.8	2.0	100 pcs / 1000pcs Bag
KWS-1	14.2	19.0	10.5	11.0	4.8	2.0	
KWS-2	23.0	27.0	19.0	11.0	4.8	2.0	
KWS-2L	15.0	18.0	12.0	10.4	4.8	2.0	
KWS-3	31.1	35.8	28.0	11.0	4.8	2.0	

KLS8-0311 (WIRE HOLDERS)

Material : UL Approved Nylon66, 94V-2.
Color : Nature
Safely isolates cable wire from board components.
Lock is releasable for repair, replacement or addition of wire or cable.



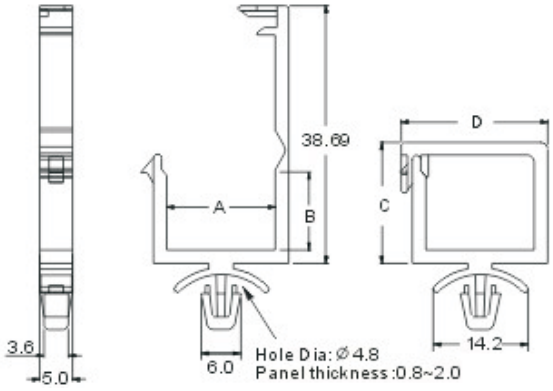

Part No.	A	B	C	D	Package
CH-D	16.2	15.0	18.1	21.84	1000

Unit:mm

Cable Clamp Series

KLS8-0306 (WIRE HOLDERS)



Material: UL approved Nylon 66, 94V-2
Drill holes on chasis board as shown. borad
Push support into the larger hole and slide onto the smaller one as fixation and then press the PCB board onto the support.

Item No.	Dimension		Mounting Hole/PCB thickness	Packing
	A	B		
RH-5	5.1	8	5.5/2.0	100pcs
RH-6	6.2	9.5	8.0/1.8	
RH-8	7.5	8.8	6.2/2.0	(1000pcs)

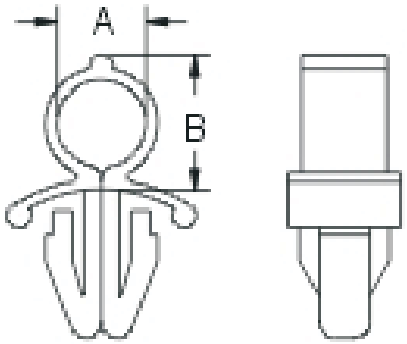

RH-5,8

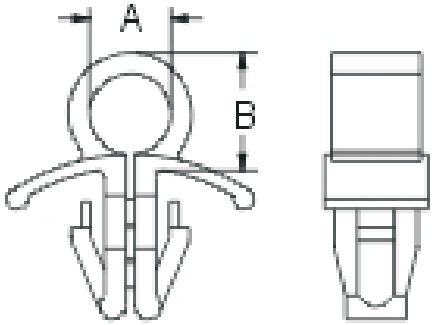

RH-6,9

KLS8-0429 (WIRE SADDLE)

Material : UL Approved Nylon6/6, 94V-2
Color : Nature



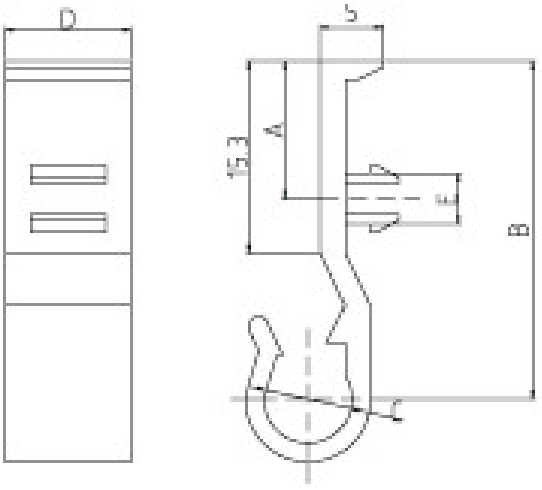

Part No.	A	B	C	D	E	Package
FGH-02	11	27	Φ7	10	4	100

Unit:mm

Cable Clamp Series

KLS8-0405 (FLAT CABLE CLAMP)

Material:UL Approved Nylon 6/6,94V-2
Tensioning device holds cables firmly place.



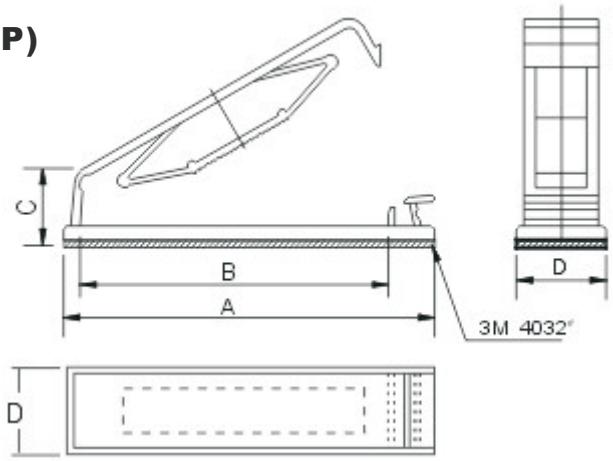

Part NO.	A	B	C	D	Package
FCC-40	67	54	13.0	8.0	100
FCC-50	78	64.9	16.3	18.8	100

KLS8-0301 (TWIST LOCK)

Material: UL approved Nylon 66, 94V-2 (Black)
To hold seperate running cable bundles.

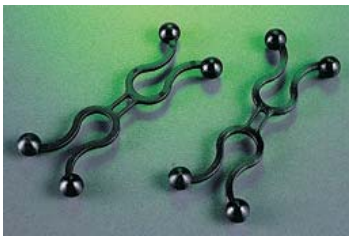

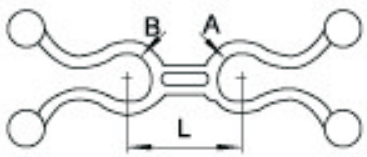

PL-08

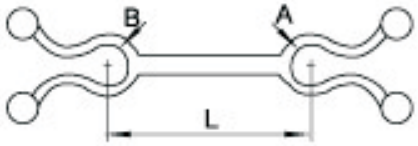

PL-0740

Unit:mm

Item No.	Dimension			Packing
	A	B	L	
PL-8	8	8	18	100pcs
PL-0740	7.5	7.5	40	(1000pcs)

Cable Clamp Series

KLS8-0302 (TWIST LOCK)

Material: UL approved Nylon 66, 94V-2 (Available in P.P. or P.E.)
Colors available upon request.
Tie-up cables at economical cost.
Open the ties to feed cable and twist on to fix.

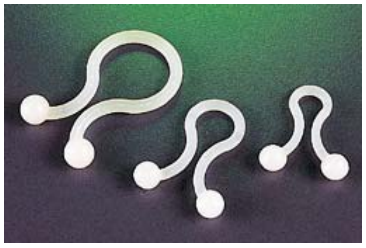

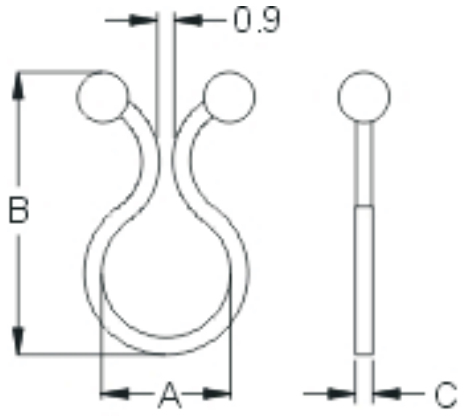

Standard design

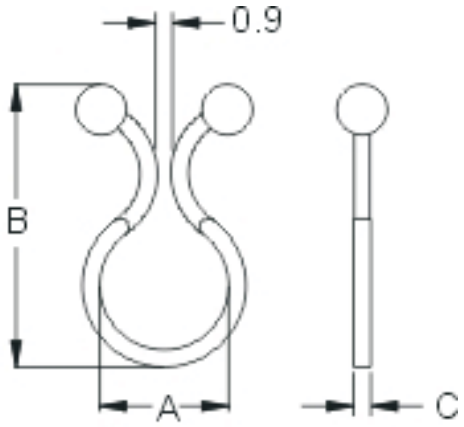

TTU-08, -11, -15, -28

Item No.	Dimension			Bundls Diameter	Packing
	A	B	C		
TT-05	5.1	21.6	1.5	4.4	100pcs (1000pcs)
TT-08	7.0	25.0	2.0	7.0	
TT-11	11.6	29.8	1.7	10.1	
TT-15	15.0	33.8	1.9	13.4	
TT-18	18.6	40.0	1.9	16.2	
TT-24	23.6	45.0	2.0	21.3	

Item No.	Dimension			Bundls Diameter	Packing
	A	B	C		
TTU-05	5.0	22.0	1.8	4.2	100pcs (1000pcs)
TTU-08	8.1	26.2	2.3	7.2	
TTU-11	11.3	29.7	2.3	10.0	
TTU-15	14.8	36.6	2.0	13.2	
TTU-18	18.0	38.0	2.0	16.5	
TTU-28	28.0	55.1	2.0	26.7	

Cable Clamp Series

KLS8-0303 (ADHESIVE TWIST LOCK)

Material: UL approved Nylon 66, 94-2 (Backed with adhesive tape)
Peel off adhesive paper before usage and insert cables into the twist lock and general twist ties.

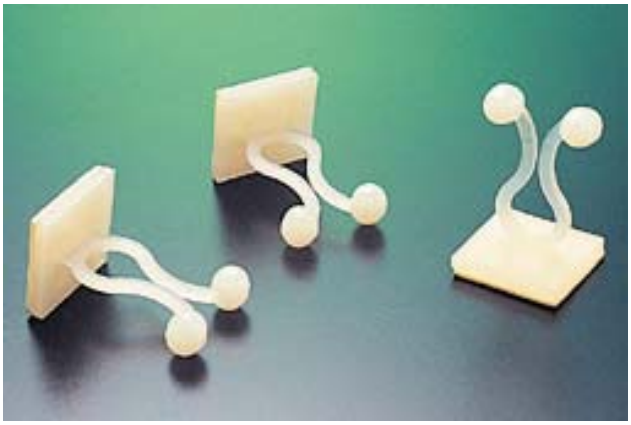

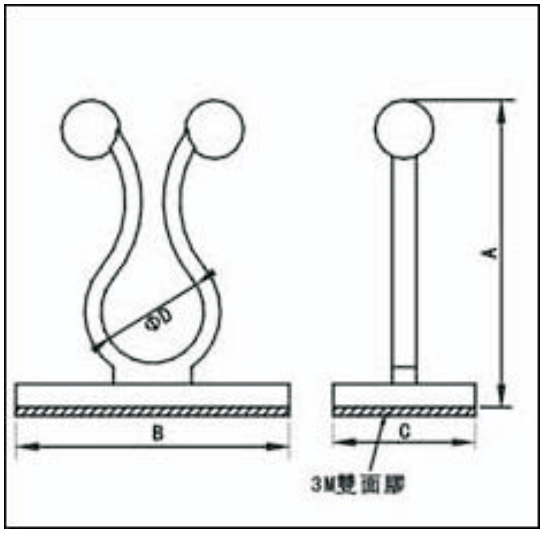

型 號 Item No.	A	B	C	D	包 裝 Packing
CTB-01	32.3	20.0	20.0	15.0	100pcs (1000pcs)
CTB-02	26.1	20.0	14.0	9.2	
CTB-02L	28.0	25.0	13.0	9.4	
CTB-03	28.1	21.0	19.0	11.1	
CTB-05	55.8	38.0	20.0	36.0	
CTB-06	27.6	10.0	19.8	6.6	
CTB-07	21.9	20.0	13.0	8.5	
CTB-08	27.5	17.4	13.5	7.9	
CTB-15	35.2	22.0	13.5	14.8	
CTB-16	37.0	25.0	13.0	18.0	
CTB-19	39.2	25.0	13.0	21.0	
CTB-20	40.0	25.5	15.0	20.6	
CTB-22	41.3	28.0	15.0	24.0	

Cable Clamp Series

KLS8-0315 (TWIST LOCK)

Material: UL approved Nylon 66, 94V-2
Locking into pre-drilled 4.8mm hole, Assembles cables into 'W' part and locks with a twist.

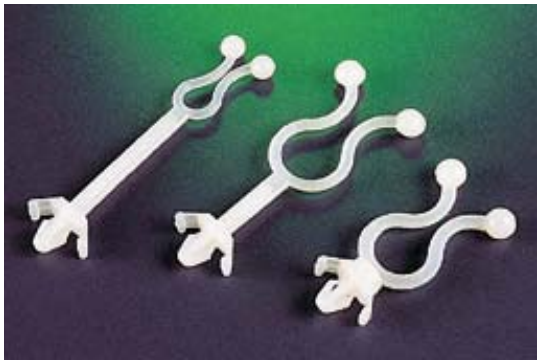

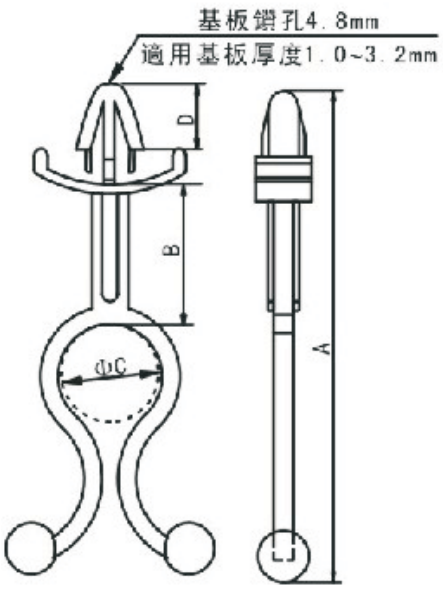

Unit : mm

型 號 Item No.	A	B	C	D	包 裝 Packing
CTS-01	33.8	3.1	7.1	10.6	1000PCS
CTS-02	51.0	20.0	7.1	10.6	500PCS
CTS-03	66.0	35.3	7.1	10.6	
CTS-04	39.6	2.8	10.8	10.6	1000PCS
CTS-05	56.8	20.0	10.8	10.6	500PCS
CTS-06	71.5	35.2	10.8	10.6	
CTS-07	42.0	3.0	15.0	10.6	1000PCS
CTS-08	59.3	20.4	15.0	10.6	500PCS
CTS-09	74.7	35.8	15.0	10.6	
CTS-10	63.5	16.2	20.0	10.6	
CTS-11	56.8	3.0	24.3	9.8	
CTS-12	53.1	15.3	11.0	10.6	
CTS-13	102.8	60.4	16.0	10.6	
CTS-14	55.3	5.0	20.3	10.6	
CTS-15	43.8	10.5	8.0	10.6	
CTS-16	34.7	5.6	8.8	10.6	
CTS-17	51.7	12.2	11	10.6	
CTS-18	87.2	46.6	12	10.6	

材質：UL合格之NYLON66(本色)，防火等級94V-2。

Cable Clamp Series

KLS8-0303 (ADHESIVE TWIST LOCK)

Material: UL approved Nylon 66, 94-2 (Backed with adhesive tape)
Peel off adhesive paper before usage and insert cables into the twist lock and general twist ties.

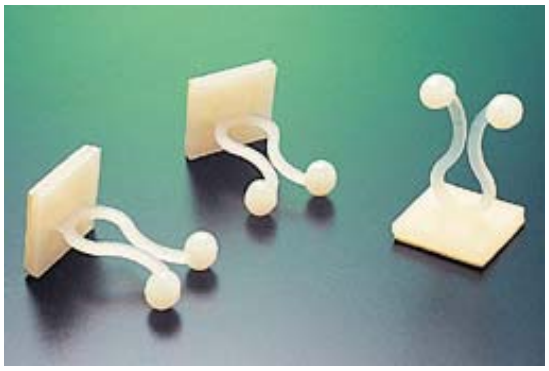

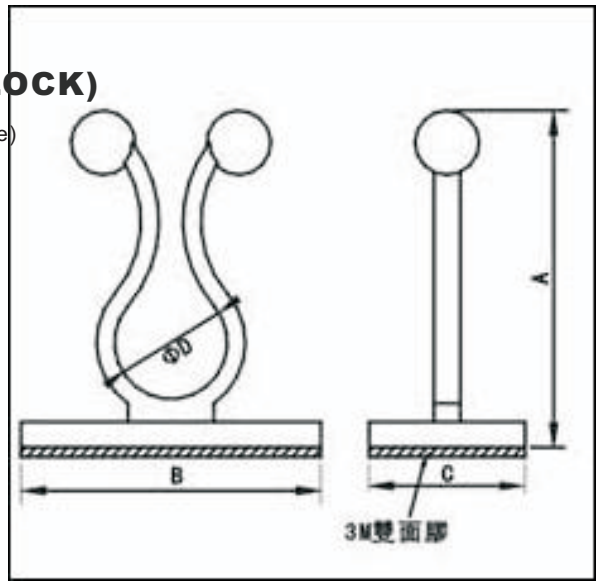

Unit : mm

型 號 Item No.	A	B	C	D	包 裝 Packing
CTB-01	32.3	20.0	20.0	15.0	100pcs (1000pcs)
CTB-02	26.1	20.0	14.0	9.2	
CTB-02L	28.0	25.0	13.0	9.4	
CTB-03	28.1	21.0	19.0	11.1	
CTB-05	55.8	38.0	20.0	36.0	
CTB-06	27.6	10.0	19.8	6.6	
CTB-07	21.9	20.0	13.0	8.5	
CTB-08	27.5	17.4	13.5	7.9	
CTB-15	35.2	22.0	13.5	14.8	
CTB-16	37.0	25.0	13.0	18.0	
CTB-19	39.2	25.0	13.0	21.0	
CTB-20	40.0	25.5	15.0	20.6	
CTB-22	41.3	28.0	15.0	24.0	

材質：UL合格之NYLON66(本色)，防火等级94V-2。

Cable Clamp Series

KLS8-0315 (TWIST LOCK)

Material: UL approved Nylon 66, 94V-2

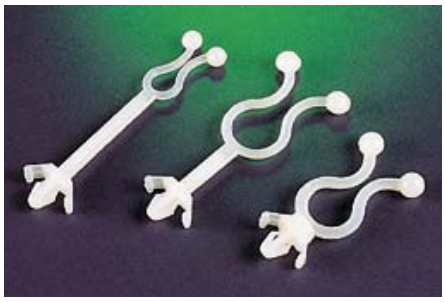

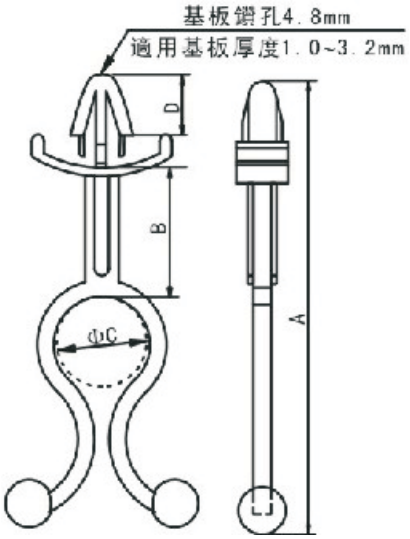

Unit: mm

型 號 Item No.	A	B	C	D	包 裝 Packing
CTS-01	33.8	3.1	7.1	10.6	1000PCS
CTS-02	51.0	20.0	7.1	10.6	500PCS
CTS-03	66.0	35.3	7.1	10.6	
CTS-04	39.6	2.8	10.8	10.6	1000PCS
CTS-05	56.8	20.0	10.8	10.6	500PCS
CTS-06	71.5	35.2	10.8	10.6	
CTS-07	42.0	3.0	15.0	10.6	1000PCS
CTS-08	59.3	20.4	15.0	10.6	500PCS
CTS-09	74.7	35.8	15.0	10.6	
CTS-10	63.5	16.2	20.0	10.6	
CTS-11	56.8	3.0	24.3	9.8	
CTS-12	53.1	15.3	11.0	10.6	
CTS-13	102.8	60.4	16.0	10.6	
CTS-14	55.3	5.0	20.3	10.6	
CTS-15	43.8	10.5	8.0	10.6	
CTS-16	34.7	5.6	8.8	10.6	
CTS-17	51.7	12.2	11	10.6	
CTS-18	87.2	46.6	12	10.6	

材質：UL合格之NYLON66(本色)，防火等級94V-2。

Cable Clamp Series

KLS8-0513 (SNAP BUSHINGS)

Material : PVC And Rubber
Color : Black
Protect power cord and smooth hole.

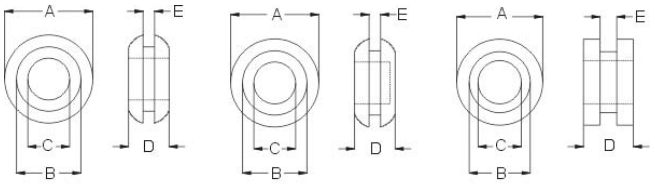

GM TYPE　　GMC TYPE　　GM-1108



Unit : mm

Item No. OPEN / CLOSE	A	B	C	D	E	Packing
GM-0603	8.5	6.0	3.0	4.7	1.7	
GM-0705	10.2	7.2	5.0	4.4	1.7	
GM-1006	13.3	10.0	6.4	6.3	1.7	
GM-1410	19.5	13.9	10.5	6.4	1.7	100pcs
GM-2015	23.7	20.1	15.5	6.1	1.7	
GM-2518	29.9	25.1	18.9	7.2	1.5	
GM-3225	38.1	31.7	25.0	7.8	1.5	

KLS8-0510 (SNAP BUSHINGS)

Material : UL Approved Nylon6/6, 94V-2
Color : Black
Protect power cord and smooth you chasis hole.
Easy installation, No tool is needed.
Can be applied after power cable was installed.



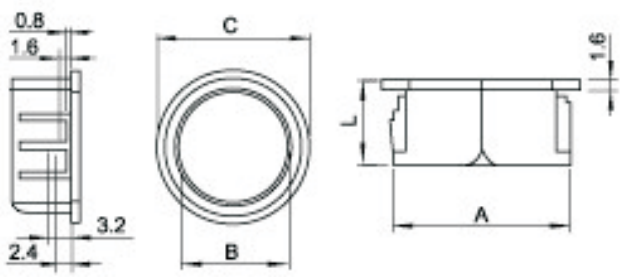

Item No.	B	C	L	Packing
SB-07	7	10.4	4.8	
SB-09	9.5	12.4	6	
SB-12	10.2	16.8	7.3	
SB-16	13.8	20.3	7.3	
SB-19	16.5	22.5	7.3	
SB-22	20	26	7.3	100pcs
SB-23	20.5	25.5	7.3	
SB-25	21.6	28.6	7.9	
SB-24A	24	27	5.3	
SB-27A	28.4	34	6	
SB-29A	29	34	7	

Cable Clamp Series

KLS8-0503 (CORD BUSHINGS)



The cord bushings are the easy low-cose way to insulate and protect your cords.
Provide non-slip grip and will not injure insulation of ac cord
Material: NYLON 66 ,UL94V-2

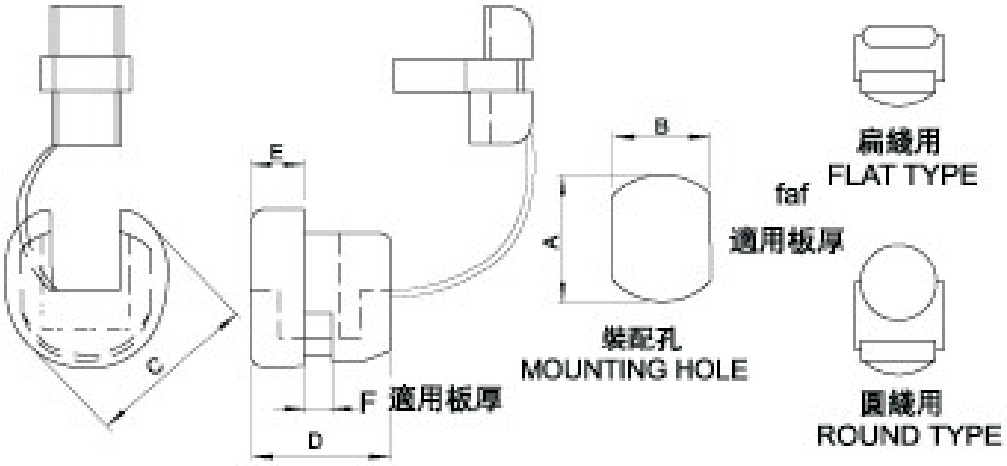

Item No.	Will Fit These Cable		Chassis Dimension		Chassis Thickness	Dimension			Section Shape	Packing
	UL/CSA Description	Size	A	B	F	C	D	E		
2P-4	SPT-1	3*5.6	9.5	8.7	0.8~1.6	10.8	10.4	4.0	FLAT TYPE	1000pcs
3P-4	SPT-1	3*5.6	11.0	9.9	0.8~1.6	12.1	10.4	4.0		
3W-1	SPT-1	3*5.6	11.0	9.9	1.9~2.5	12.5	10.4	3.2		
4N-4	SPT-2	3.71*7.6	12.7	11.8	0.8~1.6	13.9	10.4	4.0		
		3.8*7.6	13.1							
4K-4	SPT-2	3.71*7.6	12.7	11.8	1.9~2.5	13.7	10.4	4.0		
		3.8*7.6	13.1							
5N-4	SVT	6.4*7.4	12.7	11.5	0.8~1.6	14.2	10.9	4.2	ROUND TYPE	
5P-4	SVT	6.4*7.4	12.7	11.5	1.9~2.5	14.2	10.9	4.2		
6N-4	SJT3C#18	7.6	15.9	14.0	0.8~1.6	17.8	14.8	5.6		500pcs
6P-4	SJT3C#18	7.6	15.9	14.0	1.9~2.5	17.6	14.8	5.6		
6N3-4	SJT3C#16	8.2~9.2	15.9	14.0	0.8~1.6	17.3	14.8	5.6		
6P3-4	SJT3C#16	8.2~9.2	15.9	14.0	1.9~2.5	17.3	14.8	5.8		
7N-4	SJT3C#14	9.2~10.5	19.0	16.5	0.8~1.6	21.5	19.1	7.8		100pcs
		11.0	19.8							
7P-4	SJT3C#14	9.2~10.5	19.0	16.5	1.9~2.5	21.7	19.4	7.8		
		11.0	19.8							

Cable Clamp Series

KLS8-0508 (SNAP BUSHINGS)



Material : UL Approved Nylon6/6, 94V-2
Color : Black
Easy installation,no tools required.
Protects against rough panel hole edges.

Item No.	Mounting Hole A	B	C	L	Packing
SB-8S	7.8	6.8	9.8	6.0	100pcs
SB-8	7.8	5.8	9.4	8.0	
SB-10	9.5	6.3	12.0	10.3	
SB-12S	11.9	9.2	13.7	6.3	
SB-13	12.7	8.0	14.2	10.3	
SB-16	15.9	12.7	18.6	10.3	
SB-19	19.0	14.3	21.7	10.5	
SB-22	22.2	17.5	24.2	11.5	
SB-26	25.5	19.1	28.5	11.5	
SB-30	30.0	24.1	33.3	11.5	
SB-38	38.1	29.0	41.2	11.4	
SB-45	43.6	35.4	47.8	11.6	

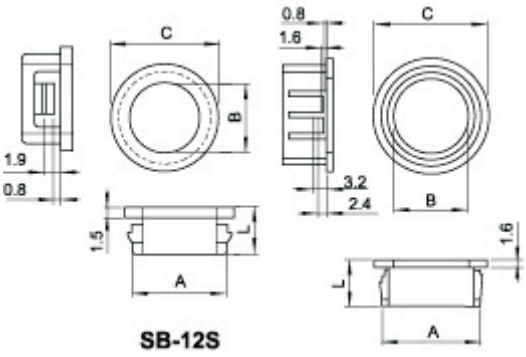

SB-12S

KLS8-0511 (HOLE PLUG)



Material : UL Approved Nylon6/6, 94V-2
Color : Black
Hole in chassis : 12.7~13
Easy installation, No tool is required.
Ideal for closing panel cavity.

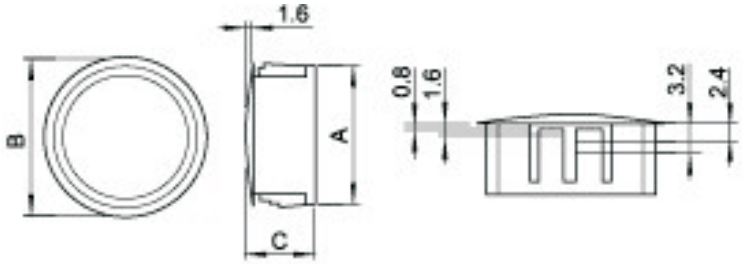

Item No.	Mounting Hole A	B	C	Packing
HP-8	8.0	9.5	7.6	100pcs
HP-10	9.5	11.9	10.1	
HP-13	12.7	14.6	10.1	
HP-16	16.0	18.7	10.6	
HP-19	19.0	23.0	10.5	
HP-22	22.2	25.0	11.0	
HP-25	25.4	28.3	11.5	
HP-30	30.0	34.2	11.0	
HP-38	38.1	42.4	11.2	
HP-45	44.5	49.1	11.1	

Cable Gland Series

KLS8-0607-PG Germany Threaded Nylon Cable Gland Series

Material: made from UL Nylon 66, 94V-2 and tight ring from rubber.

Feature:
1. Special designation, good strengthsile and none damage to electrical machine.
2. not need to dismetgrate the fix terminal, cable can be inserted throug directly then tighten easy and save time.

Application: used for machinery control box, distribution plate, machine and electrical, etc.

Unit:mm



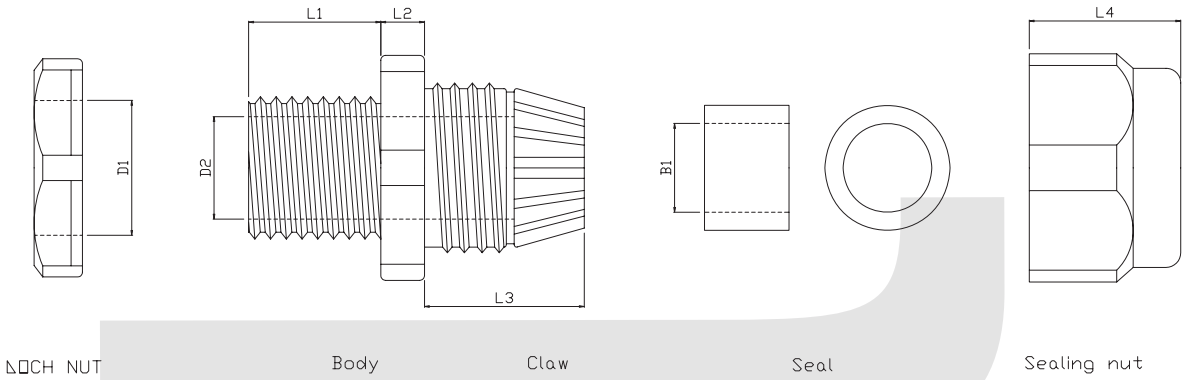

ITEM.NO.	D1	D2	L1	L2	L3	L4	B1	Cable range
PG-07	12.0	8.1	9.0	5.0	15.0	14.0	6.4	3.5-6
PG-09	16.0	11.0	9.0	5.0	15.0	16.0	8.6	4-8
PG-11	17.9	13.0	9.0	5.0	18.0	18.0	10.7	5-10
PG-13.5	20.2	15.0	9.0	5.0	20.0	19.0	13.3	6-12
PG-16	22.0	17.0	11.0	5.0	20.0	19.0	14.3	10-14
PG-19	24.0	19.0	11.0	5.0	22.0	21.0	15.5	12-15
PG-21	26.9	21.8	11.0	6.0	24.0	22.0	16.7	13-18
PG-24	29.8	24.0	13.0	7.0	24.0	24.0	19.2	15.22
PG-29	36.0	28.0	13.0	7.0	25.0	24.0	24.8	18-25
PG-36	45.7	39.0	15.0	8.0	32.0	27.0	30.7	22-32
PG-42	54.0	46.0	15.0	8.0	33.0	29.0	35.6	30-38
PG-48	59.0	51.0	16.0	8.0	36.0	30.0	41.4	34-44
PG-63	71.0	63.5	28.0	9.0	45.0	44.0	55.0	42-54

ORDER INFORMATION

KLS8-0607 - PG-07

- PG-07: Item. No.
- 0607: Germany Threaded Nylon cable glands Series
- KLS8: Part Number

Cable Gland Series

KLS8-0608-NPT America Threaded Nylon Cable Gland Series

Material: made from UL Nylon 66, 94V-2 and tight ring from rubber.

Feature:
1. Special designation, good strengthsile and none damage to electrical machine.
2. not need to dismetgrate the fix terminal, cable can be inserted throug directly then tighten easy and save time.

Application: used for machinery control box, distribution plate, machine and electrical, etc.

Unit:mm



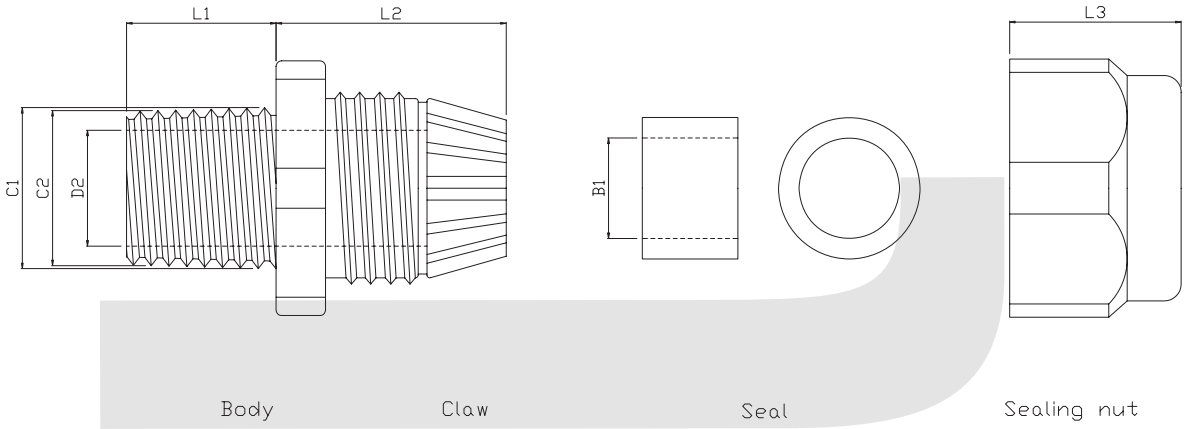

Item No.	C1	C2	NPT Threaded	D2	B1	L1	L2	L3	Cable Range	Packing
NPT-14	13.2	13.1	NPT 1/4"	8.2	6.9	7.8	19.7	13.2	3~6.5	50pcs
NPT-38	16.7	16.2	NPT 3/8"	10.8	10.5	14.6	23.8	16.8	5~10	
NPT-12	21.2	20.8	NPT 1/2"	14.9	14	12.9	28.4	18.7	10~14	
NPT-34	26.3	25.6	NPT 3/4"	18.5	18.4	14.5	29.2	22.3	13~18	
NPT-1	33.2	32.9	NPT 1"	26	25	14.9	35	25.7	18~25	25pcs
NPT-114	41.9	41.2	NPT 1 1/4"	32	33	18.2	41.6	31.1	22~32	10pcs

ORDER INFORMATION

KLS8-0608 - NPT-14

- Item. No.
- America Threaded Nylon cable glands Series
- Part Number

Cable Gland Series

KLS8-0609 With Strain Relief Nylon Cable Gland Series

Material: made from UL Nylon 66, 94V-2 and tight ring from rubber

Unit:mm



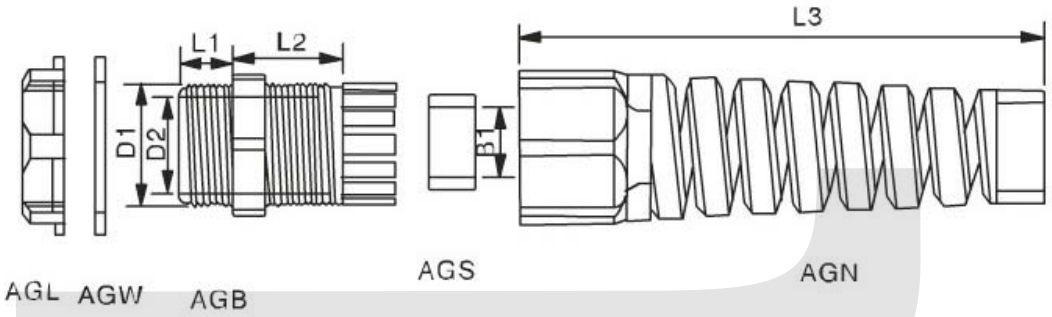

	Item.No.	Cable Range mm	L1 mm	L2+L3 mm	D1 mm	Spanner Size mm
Germany Threaded	PG-7-A	3-6.5	8	65	12.5	15/17
	PG-7-B	2-5	8	65	12.5	15/17
	PG-9-A	4-8	8	70	15.2	19/22
	PG-9-B	2-6	8	70	15.2	19/22
	PG-11-A	5-10	8	78	18.6	22/24
	PG-11-B	3-7	8	78	18.6	22/24
	PG-13.5-A	6-12	9	90	20.4	24/27
	PG-13.5-B	5-9	9	90	20.4	24/27
	PG-16-A	10-14	10	100	22.5	27/30
	PG-16-B	7-12	10	100	22.5	27/30
	PG-21-A	13-18	10	112	28.3	33/35
	PG-21-B	9-16	10	112	28.3	33/35

ORDER INFORMATION

KLS8-0609 - PG-7-A

- Item. No.
- With Strain Relief Nylon cable glands Series
- Part Number

Cable Gland Series

KLS8-0609 With Strain Relief Nylon Cable Gland Series

	Item.No.	Cable Range mm	L1 mm	L2+L3 mm	D1 mm	Spanner Size mm
Metric Threaded	M12×1.5-A	3-6.5	8	65	12	15/17
	M12×1.5-B	2-5	8	65	12	15/17
	M16×1.5-A	4-8	8	70	16	19/22
	M16×1.5-B	2-6	8	70	16	19/22
	M18×1.5-A	5-10	8	78	18	22/24
	M18×1.5-B	3-7	8	78	18	22/24
	M20×1.5-A	6-12	9	90	20	24/27
	M20×1.5-B	5-9	9	90	20	24/27
	M22×1.5-A	10-14	10	100	22	27/30
	M22×1.5-B	7-12	10	100	22	27/30
	M25×1.5-A	13-18	10	112	25	33/35
	M25×1.5-B	9-16	10	112	25	33/35
	M27×1.5-A	13-18	10	112	27	33/35
	M27×1.5-B	9-16	10	112	27	33/35
America Threaded	NPT-3/8-A	4-8	15	26	17.1	22/22
	NPT-3/8-B	2-6	15	26	17.1	22/22
	NPT-1/2-A	6-12	13	30	21.3	27/27
	NPT-1/2-B	5-9	13	30	21.3	27/27
	NPT-3/4-A	13-18	15	37	26.6	33/33
	NPT-3/4-B	9-16	15	37	26.6	33/33

ORDER INFORMATION

KLS8-0609 - PG-7-A

- Item. No.
- With Strain Relief Nylon cable glands Series
- Part Number

Cable Gland Series

KLS8-0611-M Right angle Nylon Cable Gland Series

Material: made from UL Nylon 66, 94V-2 and tight ring from rubber

Unit:mm



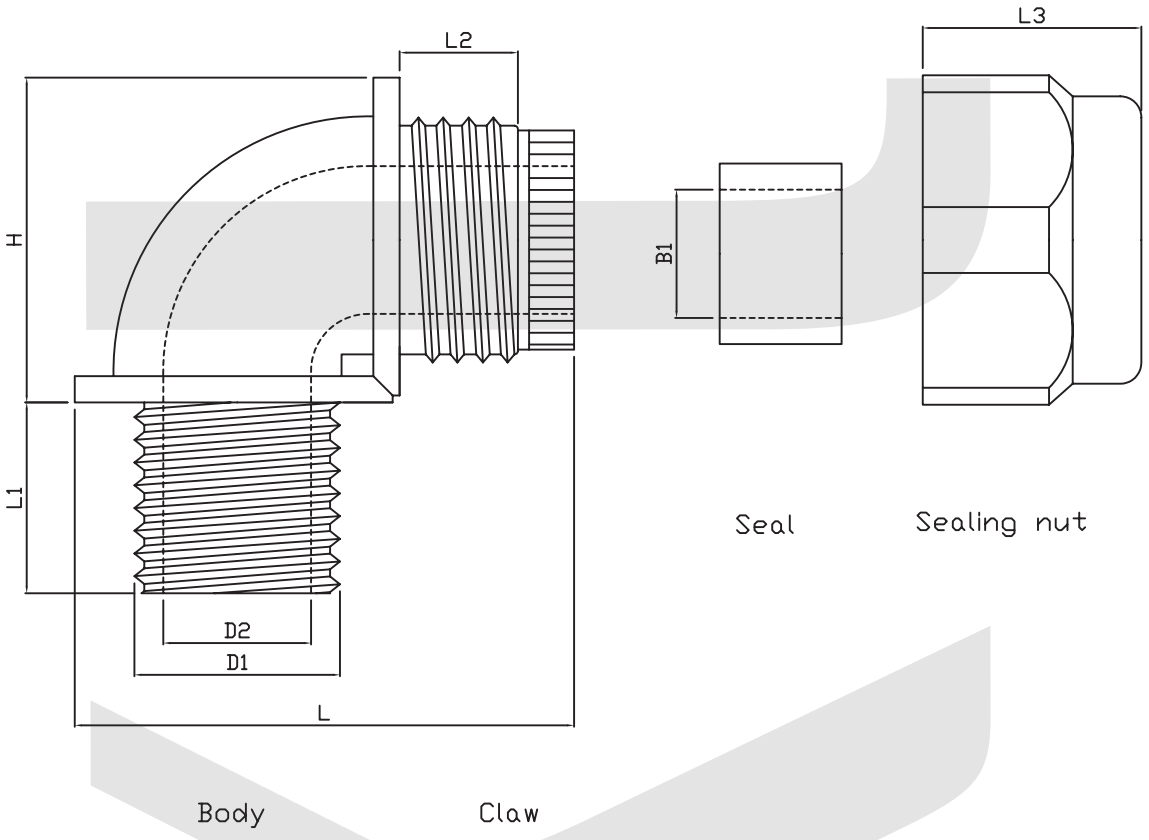

ORDER INFORMATION

KLS8-0611 - M16-0407

- Item. No.
- Right angle Nylon cable glands Series
- Part Number

Cable Gland Series

KLS8-0611-M Right angle Nylon Cable Gland Series

Threaded Type		Item.No.	Cable	Threaded OD	Threaded Length	Spanner Size	Boxing pcs
			Range(mm)	D1 (mm)	L1 (mm)	A & F (mm)	
M:Metric Threaded	M16 X 1.5	M16-0407	7 ~ 4	16	12	22 / 22	10
		M16-0608	8 ~ 6	16	12	22 / 22	10
		M16-0610	10 ~ 6	16	15	22 / 27	10
	M20 X 1.5	M20-0711	11 ~ 7	20	15	27 / 27	10
		M20-0813	13 ~ 8	20	15	27 / 27	10
		M20-0915	15 ~ 9	20	15	27 / 33	10
	M25 X 1.5	M25-1216	16 ~ 12	25	15	33 / 39	10
		M25-1418	18 ~ 14	25	15	33 / 39	10
	M32 X 1.5	M32-1622	22 ~ 16	32	15	41 / 45	10
		M32-1825	25 ~ 18	32	15	41 / 45	10
	M40 X 1.5	M40-2028	28 ~ 20	40	20	50 / 55	10
		M40-2333	33 ~ 23	40	20	50 / 55	10
PG:Germany Threaded	PG-16	PG-16-0711	11 ~ 7	22.5	12	30 / 27	10
		PG-16-0813	13 ~ 8	22.5	12	30 / 27	10
G:U.K Threaded	G-1/2	G-1/2-0711	11 ~ 7	20.95	12	27 / 27	10
		G-1/2-0813	13 ~ 8	20.95	12	27 / 27	10
		G-1/2-0915	15 ~ 9	20.95	15	27 / 33	10
	G-3/4	G-3/4-1216	16 ~ 12	26.44	15	33 / 39	10
		G-3/4-1320	20 ~ 13	26.44	15	33 / 39	10
	G-1	G-1-1622	22 ~ 16	33.25	15	42 / 45	10
		G-1-1825	25 ~ 18	33.25	15	42 / 45	10
	G-1 1/4	G-11/4-2028	28 ~ 20	41.91	20	53 / 55	10
		G-11/4-2333	33 ~ 23	41.91	20	53 / 55	10

ORDER INFORMATION

KLS8-0611 - M16-0407

- M16-0407: Item. No.
- KLS8-0611: Right angle Nylon cable glands Series
- KLS8: Part Number

Cable Gland Series

KLS8-0611-NPT Right angle Nylon Cable Gland Series

Material: made from UL Nylon 66, 94V-2 and tight ring from rubber

Unit:mm



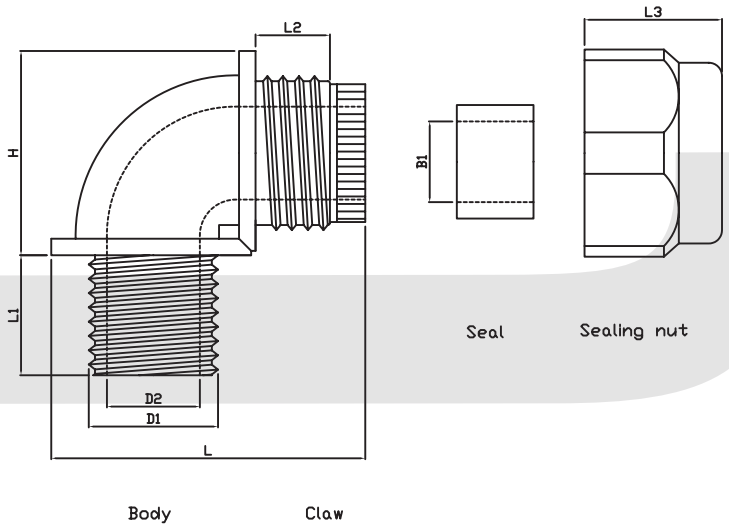

Item No.	NPT THREAD	D1	D2	B1	L1	L2	L3	L	H	Cable Range	Packing
NPT-38	NPT3/8"	16.6	12.0	9.3	11.7	9.85	16.7	48.5	30.0	5~9	20pcs
NPT-12	NPT1/2"	21.0	14.0	13.0	14.7	11.75	18.4	51.6	31.2	10~13	
NPT-34	NPT3/4"	26.3	19.2	16.4	14.8	12.55	22.3	64.5	41.6	13~16	
NPT-114	NPT1 1/4"	41.7	31.6	29.3	18.8	16.25	31.0	85.0	53.0	22~29	10pcs

ORDER INFORMATION

KLS8-0611 - NPT-3/8

- Item. No.
- Right angle Nylon cable glands Series
- Part Number

Cable Gland Series

KLS8-0612

- Material: UL approved Nylon 66, 94V-2.
- Color: Black,Gray colors.
- Ambient temperature : quiescent state -40oC to 100oC , short time 120oC dynamic
- Protection: IP68 (oniy if the washer is assembled)



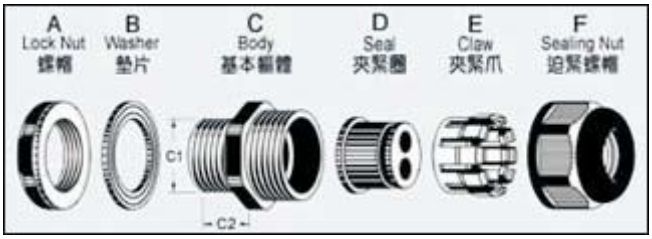



Unit : mm

2 PINS	Threaded Type		Products Type	Cable Range mm	Threaded OD C1 mm	Threaded Length C2 mm	Spanner Size A & F mm	boxing pcs
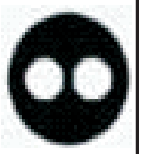	M Type Short Threaded **(Metric Threaded)**	M16 X 1.5	M16S-H2	3.1 ~ 2	16	10	22 / 19	50
			M16-H2-02-S	2.6 ~ 1.6	16	10	22 / 22	50
			M16-H2-03-S	3 ~ 2	16	10	22 / 22	50
			M16-H2-04-S	4.1 ~ 3	16	10	22 / 22	50
		M20 X 1.5	M20S-H2-02	2.6 ~ 1.6	20	10	24 / 22	50
			M20S-H2-03	3 ~ 2	20	10	24 / 22	50
			M20S-H2-04	4.1 ~ 3	20	10	24 / 22	50
			M20M-H2-05	5.2 ~ 3.5	20	15	24 / 24	50
			M20-H2-03-S	3.5 ~ 2.5	20	10	27 / 27	50
			M20-H2-04-S	4.3 ~ 3.3	20	10	27 / 27	50
			M20-H2-06-S	6.1 ~ 4.3	20	10	27 / 27	50
		M25 X 1.5	M25S-H2-03	3.5 ~ 2.5	25	12	33 / 27	50
			M25S-H2-04	4.3 ~ 3.3	25	12	33 / 27	50
			M25S-H2-06	6.1 ~ 4.3	25	12	33 / 27	50
			M25-H2-05-S	5.2 ~ 3.6	25	10	33 / 33	50
			M25-H2-06-S	6.5 ~ 5.1	25	10	33 / 33	50
			M25-H2-08-S	8.7 ~ 6.4	25	10	33 / 33	50
		M32 X 1.5	M32S-H2-05	5.2 ~ 3.6	32	12	41 / 33	10
			M32S-H2-06	6.5 ~ 5.1	32	12	41 / 33	10
			M32S-H2-08	8.7 ~ 6.4	32	12	41 / 33	10
			M32-H2-10-S	10 ~ 7.7	32	11	41 / 42	10
		M40 X 1.5	M40-H2-09-S	9 ~ 7	40	12	50 / 52	10
			M40-H2-13-S	13 ~ 11	40	12	50 / 52	10

Cable Gland Series

2 PINS	Threaded Type		Products Type	Cable Range mm	Threaded OD C1 mm	Threaded Length C2 mm	Spanner Size A & F mm	boxing pcs
	M Type Long Threaded **(Metric Threaded)**	M12 X 1.5	M12-L2-03	3.1 ~ 2	12	9	18 / 19	50
		M16 X 1.5	M16-L2-02	2.6 ~ 1.6	16	15	22 / 22	50
			M16-L2-03	3 ~ 2	16	15	22 / 22	50
			M16-L2-04	4.1 ~ 3	16	15	22 / 22	50
		M20 X 1.5	M20-L2-03	3.5 ~ 2.5	20	15	27 / 27	50
			M20-L2-04	4.3 ~ 3.3	20	15	27 / 27	50
			M20-L2-06	6.1 ~ 4.3	20	15	27 / 27	50
		M25 X 1.5	M25-L2-05	5.2 ~ 3.6	25	15	33 / 33	50
			M25-L2-06	6.5 ~ 5.1	25	15	33 / 33	50
			M25-L2-08	8.7 ~ 6.4	25	15	33 / 33	50
		M32 X 1.5	M32-L2-10	10 ~ 7.7	32	15	41 / 42	10
		M40 X 1.5	M40-L2-09	9 ~ 7	40	20	50 / 52	10
			M40-L2-13	13 ~ 11	40	20	50 / 52	10
	PG Type **Germany Threaded**	PG 7	PG7-H2-03	3.1 ~ 2	12.5	8.5	17 / 19	50
		PG 9	PG9-H2-03	3.1 ~ 2	15.2	9	22 / 19	50
		PG 11	PG11-H2-02	2.2 ~ 1.6	18.6	10	24 / 22	50
			PG11-H2-03	3 ~ 2	18.6	10	24 / 22	50
			PG11-H2-04	4.1 ~ 3	18.6	10	24 / 22	50
		PG 13.5	PG13.5-H2-05	5.2 ~ 3.5	20.4	10	27 / 24	50
		PG 16	PG16-H2-03	3.5 ~ 2.5	22.5	11	30 / 27	50
			PG16-H2-04	4.3 ~ 3.3	22.5	11	30 / 27	50
			PG16-H2-06	6.1 ~ 4.3	22.5	11	30 / 27	50
		PG 21	PG21-H2-05	5.2 ~ 3.6	28.3	12.5	36 / 33	50
			PG21-H2-06	6.5 ~ 5.1	28.3	12.5	36 / 33	50
			PG21-H2-08	8.7 ~ 6.4	28.3	12.5	36 / 33	50
		PG 29	PG29-H2-10	10 ~ 7.7	37	12	46 / 42	10
		PG 36	PG36-H2-09	9 ~ 7	47	15	57 / 52	10
			PG36-H2-13	13 ~ 11	47	15	57 / 52	10
	G Type **U.K Threaded**	1/4	G13-H2-03	3.1 ~ 2	13.16	9	19 / 19	50
		3/8	G17-H2-02	2.6 ~ 1.6	16.66	10	22 / 22	50
			G17-H2-03	3 ~ 2	16.66	10	22 / 22	50
			G17-H2-04	4.1 ~ 3	16.66	10	22 / 22	50
		1/2	G21S-H2-02	2.6 ~ 1.6	20.95	10	27 / 22	50
			G21S-H2-03	3 ~ 2	20.95	10	27 / 22	50
			G21S-H2-04	4.1 ~ 3	20.95	10	27 / 22	50
			GA21M-H2-05	5.2 ~ 3.5	20.95	10	27 / 24	50
			G21L-H2-03	3.5 ~ 2.5	20.95	10	27 / 27	50
			G21L-H2-04	4.3 ~ 3.3	20.95	10	27 / 27	50
			G21L-H2-06	6.1 ~ 4.3	20.95	10	27 / 27	50
		3/4	G26S-H2-03	3.5 ~ 2.5	26.44	12	33 / 27	50
			G26S-H2-04	4.3 ~ 3.3	26.44	12	33 / 27	50
			G26S-H2-06	6.1 ~ 4.3	26.44	12	33 / 27	50
			G26-H2-05	5.2 ~ 3.6	26.44	12.5	33 / 33	50
			G26-H2-06	6.5 ~ 5.1	26.44	12.5	33 / 33	50
			G26-H2-08	8.7 ~ 6.4	26.44	12.5	33 / 33	50
		1	G33S-H2-05	5.2 ~ 3.6	33.25	12	42 / 33	10
			G33S-H2-06	6.5 ~ 5.1	33.25	12	42 / 33	10
			G33S-H2-08	8.7 ~ 6.4	33.25	12	42 / 33	10
			G33-H2-10	10 ~ 7.7	33.25	15	42 / 42	10
		1 1/4	G42-H2-09	9 ~ 7	41.91	15	53 / 52	10
			G42-H2-13	13 ~ 11	41.91	15	53 / 52	10

Cable Gland Series

2 PINS	Threaded Type		Products Type	Cable Range mm	Threaded OD C1 mm	Threaded Length C2 mm	Spanner Size A & F mm	boxing pcs
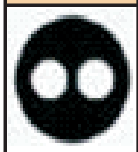	NPT Type America Threaded	NPT 3/8	NPT17-H2-02	2.6 ~ 1.6	17.05	13	22	50
			NPT17-H2-03	3 ~ 2	17.05	13	22	50
			NPT17-H2-04	4.1 ~ 3	17.05	13	22	50
		NPT 1/2	NPT21-H2-03	3.5 ~ 2.5	21.22	13	27	50
			NPT21-H2-04	4.3 ~ 3.3	21.22	13	27	50
			NPT21-H2-06	6.1 ~ 4.3	21.22	13	27	50
		NPT 3/4	NPT26-H2-05	5.2 ~ 3.6	26.57	15	33	50
			NPT26-H2-06	6.5 ~ 5.1	26.57	15	33	50
			NPT26-H2-08	8.7 ~ 6.4	26.57	15	33	50
		NPT 1	NPT33-H2-10	10 ~ 7.7	33.23	17	42	10



3 PINS	Threaded Type		Products Type	Cable Range mm	Threaded OD C1 mm	Threaded Length C2 mm	Spanner Size A & F mm	boxing pcs
	M Type Short Threaded (Metric Threaded)	M16 X 1.5	M16S-H3-02	2.6 ~ 1.6	16	10	22 / 19	50
			M16-H3-03-S	3 ~ 2	16	10	22 / 22	50
			M16-H3-04-S	4.2 ~ 3	16	10	22 / 22	50
		M20 X 1.5	M20S-H3-03	3 ~ 2	20	10	24 / 22	50
			M20S-H3-04	4.2 ~ 3	20	10	24 / 22	50
			M20M-H3-05	5 ~ 3.5	20	15	24 / 24	50
			M20-H3-03-S	3.6 ~ 2.6	20	10	27 / 27	50
			M20-H3-05-S	5.2 ~ 3.5	20	10	27 / 27	50
		M25 X 1.5	M25S-H3-03	3.6 ~ 2.6	25	12	33 / 27	50
			M25S-H3-05	5.2 ~ 3.5	25	12	33 / 27	50
			M25-H3-05-S	5.2 ~ 3.6	25	10	33 / 33	50
			M25-H3-06-S	6.2 ~ 4.8	25	10	33 / 33	50
			M25-H3-08-S	8 ~ 6.2	25	10	33 / 33	50
		M32 X 1.5	M32S-H3-05	5.2 ~ 3.6	32	12	41 / 33	10
			M32S-H3-06	6.2 ~ 4.8	32	12	41 / 33	10
			M32S-H3-08	8 ~ 6.2	32	12	41 / 33	10
			M32-H3-10-S	10 ~ 7.7	32	11	41 / 42	10
		M40 X 1.5	M40-H3-08-S	8.3~ 6.5	40	12	50 / 52	10
			M40-H3-10-S	10 ~ 7.7	40	12	50 / 52	10

Cable Gland Series

	M Type Long Threaded (Metric Threaded)	M12 X 1.5	M12-L3-02	2.6 ~ 1.6	12	9	18 / 19	50
		M16 X 1.5	M16-L3-03	3 ~ 2	16	15	22 / 22	50
			M16-L3-04	4.2 ~ 3	16	15	22 / 22	50
		M20 X 1.5	M20-L3-03	3.6 ~ 2.6	20	15	27 / 27	50
			M20-L3-05	5.2 ~ 3.5	20	15	27 / 27	50
		M25 X 1.5	M25-L3-05	5.2 ~ 3.6	25	15	33 / 33	50
			M25-L3-06	6.2 ~ 4.8	25	15	33 / 33	50
			M25-L3-08	8 ~ 6.2	25	15	33 / 33	50
		M32 X 1.5	M32-L3-10	10 ~ 7.7	32	15	41 / 42	10
		M40 X 1.5	M40-L3-08	8.3 ~ 6.5	40	20	50 / 52	10
			M40-L3-10	10 ~ 7.7	40	20	50 / 52	10
	PG Type Germany Threaded	PG 7	PG7-H3-02	2.6 ~ 1.6	12.5	8.5	17 / 19	50
		PG 9	PG9-H3-02	2.6 ~ 1.6	15.2	9	22 / 19	50
		PG 11	PG11-H3-03	3 ~ 2	18.6	10	24 / 22	50
			PG11-H3-04	4.2 ~ 3	18.6	10	24 / 22	50
		PG 13.5	PG13.5-H3-05	5 ~ 3.5	20.4	10	27 / 24	50
		PG 16	PG16-H3-03	3.6 ~ 2.6	22.5	11	30 / 27	50
			PG16-H3-05	5.2 ~ 3.5	22.5	11	30 / 27	50
		PG 21	PG21-H3-05	5.2 ~ 3.6	28.3	12.5	36 / 33	50
			PG21-H3-06	6.2 ~ 4.8	28.3	12.5	36 / 33	50
			PG21-H3-08	8 ~ 6.2	28.3	12.5	36 / 33	50
		PG 29	PG29-H3-10	10 ~ 7.7	37	12	46 / 42	10
		PG 36	PG36-H3-08	8.3 ~ 6.5	47	15	57 / 52	10
			PG36-H3-10	10 ~ 7.7	47	15	57 / 52	10
	G Type U.K Threaded	1/4	G13-H3-02	2.6 ~ 1.6	13.16	9	19 / 19	50
		3/8	G17-H3-03	3 ~ 2	16.66	10	22 / 22	50
			G17-H3-04	4.2 ~ 3	16.66	10	22 / 22	50
		1/2	G21S-H3-03	3 ~ 2	20.95	10	27 / 22	50
			G21S-H3-04	4.2 ~ 3	20.95	10	27 / 22	50
			G21M-H3-05	5 ~ 3.5	20.95	10	27 / 24	50
			G21L-H3-03	3.6 ~ 2.6	20.95	10	27 / 27	50
			G21L-H3-05	5.2 ~ 3.5	20.95	10	27 / 27	50
		3/4	G26S-H3-03	3.6 ~ 2.6	26.44	12	33 / 27	50
			G26S-H3-05	5.2 ~ 3.5	26.44	12	33 / 27	50
			G26-H3-05	5.2 ~ 3.6	26.44	12.5	33 / 33	50
			G26-H3-06	6.2 ~ 4.8	26.44	12.5	33 / 33	50
			G26-H3-08	8 ~ 6.2	26.44	12.5	33 / 33	50
		1	G33S-H3-05	5.2 ~ 3.6	33.25	12	42 / 33	10
			G33S-H3-06	6.2 ~ 4.8	33.25	12	42 / 33	10
			G33S-H3-08	8 ~ 6.2	33.25	12	42 / 33	10
			G33-H3-10	10 ~ 7.7	33.25	15	42 / 42	10
		1 1/4	G42-H3-08	8.3 ~ 6.5	41.91	15	53 / 52	10
			G42-H3-10	10 ~ 7.7	41.91	15	53 / 52	10

Cable Gland Series

	NPT Type America Threaded	NPT 3/8	NPT17-H3-03	3 ~ 2	17.05	13	22	50
			NPT17-H3-04	4.2 ~ 3	17.05	13	22	50
		NPT 1/2	NPT21-H3-03	3.6 ~ 2.6	21.22	13	27	50
			NPT21-H3-05	5.2 ~ 3.5	21.22	13	27	50
		NPT 3/4	NPT26-H3-05	5.2 ~ 3.6	26.57	15	33	50
			NPT26-H3-06	6.2 ~ 4.8	26.57	15	33	50
			NPT26-H3-08	8 ~ 6.2	26.57	15	33	50
		NPT 1	NPT33-H3-10	10 ~ 7.7	33.23	17	42	10



4 PINS	Threaded Type		Products Type	Cable Range mm	Threaded OD C1 mm	Threaded Length C2 mm	Spanner Size A & F mm	boxing pcs
	M Type Short Threaded (Metric Threaded)	M16 X 1.5	M16S-H4-02	2.3 ~ 1.3	16	10	22 / 19	50
			M16-H4-02-S	2.4 ~ 1.4	16	10	22 / 22	50
			M16-H4-03-S	3.4 ~ 2.4	16	10	22 / 22	50
		M20 X 1.5	M20S-H4-02	2.4 ~ 1.4	20	10	24 / 22	50
			M20S-H4-03	3.4 ~ 2.4	20	10	24 / 22	50
			M20M-H4-04	4.2 ~ 3	20	15	24 / 24	50
			M20-H4-02-S	2.5 ~ 1.6	20	10	27 / 27	50
			M20-H4-03-S	3.6 ~ 2.5	20	10	27 / 27	50
			M20-H4-04-S	4.8 ~ 3.4	20	10	27 / 27	50
		M25 X 1.5	M25S-H4-02	2.5 ~ 1.6	25	12	33 / 27	50
			M25S-H4-03	3.6 ~ 2.5	25	12	33 / 27	50
			M25S-H4-04	4.8 ~ 3.4	25	12	33 / 27	50
			M25-H4-03-S	3.1 ~ 2	25	10	33 / 33	50
			M25-H4-04-S	4.1 ~ 3	25	10	33 / 33	50
			M25-H4-05-S	5.2 ~ 3.8	25	10	33 / 33	50
			M25-H4-07-S	7.3 ~ 5.6	25	10	33 / 33	50
		M32 X 1.5	M32S-H4-03	3.1 ~ 2	32	12	41 / 33	10
			M32S-H4-04	4.1 ~ 3	32	12	41 / 33	10
			M32S-H4-05	5.2 ~ 3.8	32	12	41 / 33	10
			M32S-H4-07	7.3 ~ 5.6	32	12	41 / 33	10
			M32-H4-09-S	9 ~ 7	32	11	41 / 42	10
		M40 X 1.5	M40-H4-12-S	12 ~ 10	40	12	50 / 52	10

Cable Gland Series

	M Type Long Threaded (Metric Threaded)	M12 X 1.5	M12-L4-02	2.3 ~ 1.3	12	9	18 / 19	50
		M16 X 1.5	M16-L4-02	2.4 ~ 1.4	16	15	22 / 22	50
			M16-L4-03	3.4 ~ 2.4	16	15	22 / 22	50
		M20 X 1.5	M20-L4-02	2.5 ~ 1.6	20	15	27 / 27	50
			M20-L4-03	3.6 ~ 2.5	20	15	27 / 27	50
			M20-L4-04	4.8 ~ 3.4	20	15	27 / 27	50
		M25 X 1.5	M25-L4-03	3.1 ~ 2	25	15	33 / 33	50
			M25-L4-04	4.1 ~ 3	25	15	33 / 33	50
			M25-L4-05	5.2 ~ 3.8	25	15	33 / 33	50
			M25-L4-07	7.3 ~ 5.6	25	15	33 / 33	50
		M32 X 1.5	M32-L4-09	9 ~ 7	32	15	41 / 42	10
		M40 X 1.5	M40-L4-12	12 ~ 10	40	20	50 / 52	10
	PG Type Germany Threaded	PG 7	PG7-H4-02	2.3 ~ 1.3	12.5	8.5	17 / 19	50
		PG 9	PG9-H4-02	2.3 ~ 1.3	15.2	9	22 / 19	50
		PG 11	PG11-H4-02	2.4 ~ 1.4	18.6	10	24 / 22	50
			PG11-H4-03	3.4 ~ 2.4	18.6	10	24 / 22	50
		PG 13.5	PG13.5-H4-04	4.2 ~ 3	20.4	10	27 / 24	50
		PG 16	PG16-H4-02	2.5 ~ 1.6	22.5	11	30 / 27	50
			PG16-H4-03	3.6 ~ 2.5	22.5	11	30 / 27	50
			PG16-H4-04	4.8 ~ 3.4	22.5	11	30 / 27	50
		PG 21	PG21-H4-03	3.1 ~ 2	28.3	12.5	36 / 33	50
			PG21-H4-04	4.1 ~ 3	28.3	12.5	36 / 33	50
			PG21-H4-05	5.2 ~ 3.8	28.3	12.5	36 / 33	50
			PG21-H4-07	7.3 ~ 5.6	28.3	12.5	36 / 33	50
		PG 29	PG29-H4-09	9 ~ 7	37	12	46 / 42	10
		PG 36	PG36-H4-12	12 ~ 10	47	15	57 / 52	10
	G Type U.K Threaded	1/4	G13-H4-02	2.3 ~ 1.3	13.16	9	19 / 19	50
		3/8	G17-H4-02	2.4 ~ 1.4	16.66	10	22 / 22	50
			G17-H4-03	3.4 ~ 2.4	16.66	10	22 / 22	50
		1/2	G21S-H4-02	2.4 ~ 1.4	20.95	10	27 / 22	50
			G21S-H4-03	3.4 ~ 2.4	20.95	10	27 / 22	50
			G21M-H4-04	4.2 ~ 3	20.95	10	27 / 24	50
			G21L-H4-02	2.5 ~ 1.6	20.95	10	27 / 27	50
			G21L-H4-03	3.6 ~ 2.5	20.95	10	27 / 27	50
			G21L-H4-04	4.8 ~ 3.4	20.95	10	27 / 27	50
		3/4	G26S-H4-02	2.5 ~ 1.6	26.44	12	33 / 27	50
			G26S-H4-03	3.6 ~ 2.5	26.44	12	33 / 27	50
			G26S-H4-04	4.8 ~ 3.4	26.44	12	33 / 27	50
			G26-H4-03	3.1 ~ 2	26.44	12.5	33 / 33	50
			G26-H4-04	4.1 ~ 3	26.44	12.5	33 / 33	50
			G26-H4-05	5.2 ~ 3.8	26.44	12.5	33 / 33	50
			G26-H4-07	7.3 ~ 5.6	26.44	12.5	33 / 33	50
		1	G33S-H4-03	3.1 ~ 2	33.25	12	42 / 33	10
			G33S-H4-04	4.1 ~ 3	33.25	12	42 / 33	10
			G33S-H4-05	5.2 ~ 3.8	33.25	12	42 / 33	10
			G33S-H4-07	7.3 ~ 5.6	33.25	12	42 / 33	10
			G33-H4-09	9 ~ 7	33.25	15	42 / 42	10
		1 1/4	G42-H4-12	12 ~ 10	41.91	15	53 / 52	10

Cable Gland Series

	NPT Type America Threaded	NPT 3/8	NPT17-H4-02	2.4 ~ 1.4	17.05	13	22	50
			NPT17-H4-03	3.4 ~ 2.4	17.05	13	22	50
		NPT 1/2	NPT21-H4-02	2.5 ~ 1.6	21.22	13	27	50
			NPT21-H4-03	3.6 ~ 2.5	21.22	13	27	50
			NPT21-H4-04	4.8 ~ 3.4	21.22	13	27	50
		NPT 3/4	NPT26-H4-03	3.1 ~ 2	26.57	15	33	50
			NPT26-H4-04	4.1 ~ 3	26.57	15	33	50
			NPT26-H4-05	5.2 ~ 3.8	26.57	15	33	50
			NPT26-H4-07	7.3 ~ 5.6	26.57	15	33	50
		NPT 1	NPT33-H4-09	9 ~ 7	33.23	17	42	10

Material : made from UL Nylon 66, 94V-2 and tight ring from rubber.
Working temperature: -40°C~+100°C,the item can also endure 120°C instantly
Protection: IP68
Application : used for machinery control box, distribution plate, machine and

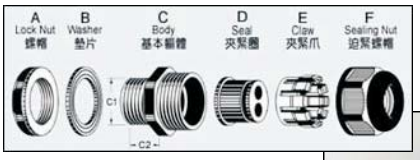



5 PINS	Threaded Type		Products Type	Cable Range mm	Threaded OD C1 mm	Threaded Length C2 mm	Spanner Size A & F mm	boxing pcs
	M Type Short Threaded (Metric Threaded)	M16 X 1.5	M16-H5-02-S	2.8 ~ 2	16	10	22 / 22	50
		M20 X 1.5	M20S-H5-02	2.8 ~ 2	20	10	24 / 22	50
			M20-H5-02-S	2 ~ 1.3	20	10	27 / 27	50
			M20-H5-03-S	3.1 ~ 2	20	10	27 / 27	50
			M20-H5-04-S	4.1 ~ 3	20	10	27 / 27	50
		M25 X 1.5	M25S-H5-02	2 ~ 1.3	25	12	33 / 27	50
			M25S-H5-03	3.1 ~ 2	25	12	33 / 27	50
			M25S-H5-04	4.1 ~ 3	25	12	33 / 27	50
			M25-H5-03-S	3.6 ~ 2.6	25	10	33 / 33	50
			M25-H5-04-S	4.6 ~ 3.6	25	10	33 / 33	50
			M25-H5-06-S	6 ~ 4.6	25	10	33 / 33	50

Cable Gland Series

		M32 X 1.5	M32S-H5-03	3.6 ~ 2.6	32	12	41 / 33	10
			M32S-H5-04	4.6 ~ 3.6	32	12	41 / 33	10
			M32S-H5-06	6 ~ 4.6	32	12	41 / 33	10
			M32-H5-08-S	8 ~ 6	32	11	41 / 42	10
		M40 X 1.5	M40-H5-08-S	8.3~ 6.5	40	12	50 / 52	10
	M Type Long Threaded (Metric Threaded)	M16 X 1.5	M16-L5-02	2.8 ~ 2	16	15	22 / 22	50
		M20 X 1.5	M20-L5-02	2 ~ 1.3	20	15	27 / 27	50
			M20-L5-03	3.1 ~ 2	20	15	27 / 27	50
			M20-L5-04	4.1 ~ 3	20	15	27 / 27	50
		M25 X 1.5	M25-L5-03	3.6 ~ 2.6	25	15	33 / 33	50
			M25-L5-04	4.6 ~ 3.6	25	15	33 / 33	50
			M25-L5-06	6 ~ 4.6	25	15	33 / 33	50
		M32 X 1.5	M32-L5-08	8 ~ 6	32	15	41 / 42	10
		M40 X 1.5	M40-L5-08	8.3~ 6.5	40	20	50 / 52	10
		M40 X 1.5	M40-H5-08-S	8.3~ 6.5	40	12	50 / 52	10
		M16 X 1.5	M16-L5-02	2.8 ~ 2	16	15	22 / 22	50
			M20-L5-02	2 ~ 1.3	20	15	27 / 27	50
	M Type Long Threaded (Metric Threaded)	M20 X 1.5	M20-L5-03	3.1 ~ 2	20	15	27 / 27	50
			M20-L5-04	4.1 ~ 3	20	15	27 / 27	50
		M25 X 1.5	M25-L5-03	3.6 ~ 2.6	25	15	33 / 33	50
			M25-L5-04	4.6 ~ 3.6	25	15	33 / 33	50
			M25-L5-06	6 ~ 4.6	25	15	33 / 33	50
		M32 X 1.5	M32-L5-08	8 ~ 6	32	15	41 / 42	10
		M40 X 1.5	M40-L5-08	8.3~ 6.5	40	20	50 / 52	10

Cable Gland Series

	PG Type Germany Threaded	PG 11	PG11-H5-02	2.8 ~ 2	18.6	10	24 / 22	50
		PG 16	PG16-H5-02	2 ~ 1.3	22.5	11	30 / 27	50
			PG16-H5-03	3.1 ~ 2	22.5	11	30 / 27	50
			PG16-H5-04	4.1 ~ 3	22.5	11	30 / 27	50
		PG 21	PG21-H5-03	3.6 ~ 2.6	28.3	12.5	36 / 33	50
			PG21-H5-04	4.6 ~ 3.6	28.3	12.5	36 / 33	50
			PG21-H5-06	6 ~ 4.6	28.3	12.5	36 / 33	50
		PG 29	PG29-H5-08	8 ~ 6	37	12	46 / 42	10
		PG 36	PG36-H5-08	8.3~ 6.5	47	15	57 / 52	10
	G Type U.K Threaded	3/8	G17-H5-02	2.8 ~ 2	16.66	10	22 / 22	50
		1/2	G21S-H5-02	2.8 ~ 2	20.95	10	27 / 22	50
			G21L-H5-02	2 ~ 1.3	20.95	10	27 / 27	50
			G21L-H5-03	3.1 ~ 2	20.95	10	27 / 27	50
			G21L-H5-04	4.1 ~ 3	20.95	10	27 / 27	50
		3/4	G26S-H5-02	2 ~ 1.3	26.44	12	33 / 27	50
			G26S-H5-03	3.1 ~ 2	26.44	12	33 / 27	50
			G26S-H5-04	4.1 ~ 3	26.44	12	33 / 27	10
			G26-H5-03	3.6 ~ 2.6	26.44	12.5	33 / 33	50
			G26-H5-04	4.6 ~ 3.6	26.44	12.5	33 / 33	50
			G26-H5-06	6 ~ 4.6	26.44	12.5	33 / 33	50
		1	G33S-H5-03	3.6 ~ 2.6	33.25	12	42 / 33	10
			G33S-H5-04	4.6 ~ 3.6	33.25	12	42 / 33	10
			G33S-H5-06	6 ~ 4.6	33.25	12	42 / 33	10
			G33-H5-08	8 ~ 6	33.25	15	42 / 42	10
		1 1/4	G42-H5-08	8.3~ 6.5	41.91	15	53 / 52	10

Cable Gland Series

	NPT Type America Threaded	NPT 3/8	NPT17-H5-02	2.8 ~ 2	17.05	13	22	50
		NPT 1/2	NPT21-H5-02	2 ~ 1.3	21.22	13	27	50
			NPT21-H5-03	3.1 ~ 2	21.22	13	27	50
			NPT21-H5-04	4.1 ~ 3	21.22	13	27	50
		NPT 3/4	NPT26-H5-03	3.6 ~ 2.6	26.57	15	33	50
			NPT26-H5-04	4.6 ~ 3.6	26.57	15	33	50
			NPT26-H5-06	6 ~ 4.6	26.57	15	33	50
		NPT 1	NPT33-H5-08	8 ~ 6	33.23	17	42	10



6 PINS	Threaded Type		Products Type	Cable Range mm	Threaded OD C1 mm	Threaded Length C2 mm	Spanner Size A & F mm	boxing pcs
	M Type Short Threaded (Metric Threaded)	M16 X 1.5	M16-H6-02-S	2.1 ~ 1.4	16	10	22 / 22	50
		M20 X 1.5	M20S-H6-02	2.1 ~ 1.4	20	10	24 / 22	50
			M20-H6-02-S	2 ~ 1.3	20	10	27 / 27	50
			M20-H6-03-S	3 ~ 2	20	10	27 / 27	50
		M25 X 1.5	M25S-H6-02	2 ~ 1.3	25	12	33 / 27	50
			M25S-H6-03	3 ~ 2	25	12	33 / 27	50
			M25-H6-03-S	3.6 ~ 2.6	25	10	33 / 33	50
			M25-H6-05-S	5.2 ~ 3.6	25	10	33 / 33	50
		M32 X 1.5	M32S-H6-03	3.6 ~ 2.6	32	12	41 / 33	10
			M32S-H6-05	5.2 ~ 3.6	32	12	41 / 33	10
			M32-H6-07-S	7 ~ 5.6	32	11	41 / 42	10

Cable Gland Series

	M Type Long Threaded (Metric Threaded)	M16 X 1.5	M16-L6-02	2.1 ~ 1.4	16	15	22 / 22	50
		M20 X 1.5	M20-L6-02	2 ~ 1.3	20	15	27 / 27	50
			M20-L6-03	3 ~ 2	20	15	27 / 27	50
		M25 X 1.5	M25-L6-03	3.6 ~ 2.6	25	15	33 / 33	50
			M25-L6-05	5.2 ~ 3.6	25	15	33 / 33	50
		M32 X 1.5	M32-L6-07	7 ~ 5.6	32	15	41 / 42	10
	PG Type Germany Threaded	PG 11	PG11-H6-02	2.1 ~ 1.4	18.6	10	24 / 22	50
		PG 16	PG16-H6-02	2 ~ 1.3	22.5	11	30 / 27	50
			PG16-H6-03	3 ~ 2	22.5	11	30 / 27	50
		PG 21	PG21-H6-03	3.6 ~ 2.6	28.3	12.5	36 / 33	50
			PG21-H6-05	5.2 ~ 3.6	28.3	12.5	36 / 33	50
		PG 29	PG29-H6-07	7 ~ 5.6	37	12	46 / 42	10
	G Type U.K Threaded	3/8	G17-H6-02	2.1 ~ 1.4	16.66	10	22 / 22	50
		1/2	G21S-H6-02	2.1 ~ 1.4	20.95	10	27 / 22	50
			G21L-H6-02	2 ~ 1.3	20.95	10	27 / 27	50
			G21L-H6-03	3 ~ 2	20.95	10	27 / 27	50
		3/4	G26S-H6-02	2 ~ 1.3	26.44	12	33 / 27	50
			G26S-H6-03	3 ~ 2	26.44	12	33 / 27	50
			G26-H6-03	3.6 ~ 2.6	26.44	12.5	33 / 33	10
			G26-H6-05	5.2 ~ 3.6	26.44	12.5	33 / 33	50
		1	G33S-H6-03	3.6 ~ 2.6	33.25	12	42 / 33	10
			G33S-H6-05	5.2 ~ 3.6	33.25	12	42 / 33	10
			G33-H6-07	7 ~ 5.6	33.25	15	42 / 42	10
	NPT Type America Threaded	NPT 3/8	NPT17-H6-02	2.1 ~ 1.4	17.05	13	22	50
		NPT 1/2	NPT21-H6-02	2 ~ 1.3	21.22	13	27	50
			NPT21-H6-03	3 ~ 2	21.22	13	27	50
		NPT 3/4	NPT26-H6-03	3.6 ~ 2.6	26.57	15	33	50
			NPT26-H6-05	5.2 ~ 3.6	26.57	15	33	50
		NPT 1	NPT33-H6-07	7 ~ 5.6	33.23	17	42	10



Cable Gland Series

7 PINS	Threaded Type		Products Type	Cable Range mm	Threaded OD C1 mm	Threaded Length C2 mm	Spanner Size A & F mm	boxing pcs
	M Type Short Threaded (Metric Threaded)	M20 X 1.5	M20-H7-02-S	2 ~ 1.3	20	10	27 / 27	50
			M20-H7-03-S	3 ~ 2	20	10	27 / 27	50
		M25 X 1.5	M25S-H7-02	2 ~ 1.3	25	12	33 / 27	50
			M25S-H7-03	3 ~ 2	25	12	33 / 27	50
			M25-H7-03-S	3.6 ~ 2.6	25	10	33 / 33	50
		M32 X 1.5	M32S-H7-03	3.6 ~ 2.6	32	12	41 / 33	10
			M32-H7-06-S	6 ~ 4.6	32	11	41 / 42	10
	M Type Long Threaded (Metric Threaded)	M20 X 1.5	M20-L7-02	2 ~ 1.3	20	15	27 / 27	50
			M20-L7-03	3 ~ 2	20	15	27 / 27	50
		M25 X 1.5	M25-L7-03	3.6 ~ 2.6	25	15	33 / 33	50
		M32 X 1.5	M32-L7-06	6 ~ 4.6	32	15	41 / 42	10
	PG Type Germany Threaded	PG 16	PG16-H7-02	2 ~ 1.3	22.5	11	30 / 27	50
			PG16-H7-03	3 ~ 2	22.5	11	30 / 27	50
		PG 21	PG21-H7-03	3.6 ~ 2.6	28.3	12.5	36 / 33	50
		PG 29	PG29-H7-06	6 ~ 4.6	37	12	46 / 42	10
	G Type U.K Threaded	G(PF) 1/2	G21L-H7-02	2 ~ 1.3	20.95	10	27 / 27	50
			G21L-H7-03	3 ~ 2	20.95	10	27 / 27	50
		G(PF) 3/4	G26S-H7-02	2 ~ 1.3	26.44	12	33 / 27	50
			G26S-H7-03	3 ~ 2	26.44	12	33 / 27	50
			G26-H7-03	3.6 ~ 2.6	26.44	12.5	33 / 33	50
		G(PF) 1	G33S-H7-03	3.6 ~ 2.6	33.25	12	42 / 33	10
			G33-H7-06	6 ~ 4.6	33.25	15	42 / 42	10
	NPT Type America Threaded	NPT 1/2	NPT21-H7-02	2 ~ 1.3	21.22	13	27	50
			NPT21-H7-03	3 ~ 2	21.22	13	27	50
		NPT 3/4	NPT26-H7-03	3.6 ~ 2.6	26.57	15	33	50
		NPT 1	NPT33-H7-06	6 ~ 4.6	33.23	17	42	10



Cable Gland Series

8 PINS	Threaded Type		Products Type	Cable Range mm	Threaded OD C1 mm	Threaded Length C2 mm	Spanner Size A & F mm	boxing pcs
	M Type Short Threaded **(Metric Threaded)**	M20 X 1.5	M20-H8-01-S	1.5 ~ 1	20	10	27 / 27	50
			M20-H8-02-S	2.8 ~ 2	20	10	27 / 27	50
		M25 X 1.5	M25S-H8-01	1.5 ~ 1	25	12	33 / 27	50
			M25S-H8-02	2.8 ~ 2	25	12	33 / 27	50
			M25-H8-03-S	3.6 ~ 2.6	25	10	33 / 33	50
			M25-H8-04-S	4.1 ~ 3	25	10	33 / 33	50
			M25-H8-05-S	5.1 ~ 4.5	25	10	33 / 33	50
		M32 X 1.5	M32S-H8-03	3.6 ~ 2.6	32	12	41 / 33	10
			M32S-H8-04	4.1 ~ 3	32	12	41 / 33	10
			M32S-H8-05	5.1 ~ 4.5	32	12	41 / 33	10
			M32-H8-05-S	5.1 ~ 4	32	11	41 / 42	10
	M Type Long Threaded **(Metric Threaded)**	M20 X 1.5	M20-L8-01	1.5 ~ 1	20	15	27 / 27	50
			M20-L8-02	2.8 ~ 2	20	15	27 / 27	50
		M25 X 1.5	M25-L8-03	3.6 ~ 2.6	25	15	33 / 33	50
			M25-L8-04	4.1 ~ 3	25	15	33 / 33	50
			M25-L8-05	5.1 ~ 4.5	25	15	33 / 33	50
		M32 X 1.5	M32-L8-05	5.1 ~ 4	32	15	41 / 42	10

Cable Gland Series

	PG Type Germany Threaded	PG 16	PG16-H8-01	1.5 ~ 1	22.5	11	30 / 27	50
			PG16-H8-02	2.8 ~ 2	22.5	11	30 / 27	50
		PG 21	PG21-H8-03	3.6 ~ 2.6	28.3	12.5	36 / 33	50
			PG21-H8-04	4.1 ~ 3	28.3	12.5	36 / 33	50
			PG21-H8-05	5.1 ~ 4.5	28.3	12.5	36 / 33	50
		PG 29	PG29-H8-05	5.1 ~ 4	37	12	46 / 42	10
	G Type U.K Threaded	G(PF) 1/2	G21L-H8-01	1.5 ~ 1	20.95	10	27 / 27	50
			G21L-H8-02	2.8 ~ 2	20.95	10	27 / 27	50
		G(PF) 3/4	G26S-H8-01	1.5 ~ 1	26.44	12	33 / 27	50
			G26S-H8-02	2.8 ~ 2	26.44	12	33 / 27	50
			G26-H8-03	3.6 ~ 2.6	26.44	12.5	33 / 33	50
			G26-H8-04	4.1 ~ 3	26.44	12.5	33 / 33	50
			G26-H8-05	5.1 ~ 4.5	26.44	12.5	33 / 33	50
		G(PF) 1	G33S-H8-03	3.6 ~ 2.6	33.25	12	42 / 33	10
			G33S-H8-04	4.1 ~ 3	33.25	12	42 / 33	10
			G33S-H8-05	5.1 ~ 4.5	33.25	12	42 / 33	10
			G33-H8-05	5.1 ~ 4	33.25	15	42 / 42	10
	NPT Type America Threaded	NPT 1/2	NPT21-H8-01	1.5 ~ 1	21.22	13	27	50
			NPT21-H8-02	2.8 ~ 2	21.22	13	27	50
		NPT 3/4	NPT26-H8-03	3.6 ~ 2.6	26.57	15	33	50
			NPT26-H8-04	4.1 ~ 3	26.57	15	33	50
			NPT26-H8-05	5.1 ~ 4.5	26.57	15	33	50
		NPT 1	NPT33-H8-05	5.1 ~ 4	33.23	17	42	10

Cable Gland Series

KLS8-0613 Nylon Cable Gland Series

Material: UL approved Nylon 66, 94V-2 (Black)
Well designed for insulation, waterproof and impack resistant.
Used extensively for protection and fixation of cables in controll panel and apparatus.



Application:
1. Mount body to pre-drilled panel hole and fix it with locking nut.
2. Insert cables through body and then seals consequently. Finally, Press them together with press nut to hold cable in position.

Unit:mm

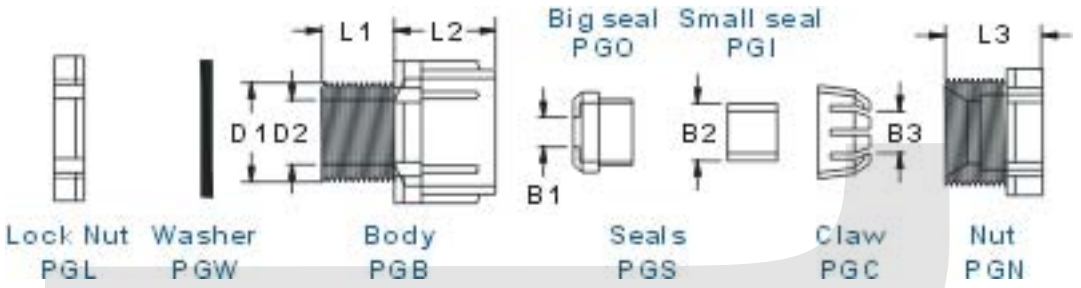

Item No.	D1	D2	B1	B2	B3	L1	L2	L3	Cable Range	Packing
PG-16	16	10.5	.	7	10	12	17	16.5	5~10	50pcs
PG-20	20	13.7	.	9	13	13	19	19.5	6~13	
PG-25	25	18.5	.	11	17	13	22	21	10~18	
PG-32	32	25	.	15	20	15	24.5	24.5	16~22	25pcs
PG-40	40	32	22	27	31	21	26.5	27.5	20~27	10pcs
PG-50	50	41.5	32	36	41	23	30	31	30~41	
PG-63	63	53.2	43	43	51	25	33	33	40~53	

ORDER INFORMATION

KLS8-0613 - PG-16
- Item. No.
- Nylon cable glands Series
- Part Number

Cable Gland Series

KLS8-0614

- Material: UL approved Nylon 66, 94V-2.
- Color: Black,Gray colors.
- ambient temperature : quiescent state -40oC to 100oC , short time 120oC dynamic

※ Protection: IP68 (oniy if the washer is assembled)



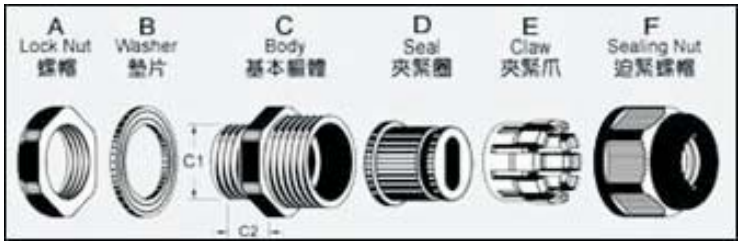

Unit : mm

Threaded Type		Metric Threaded Products Type	Black	Gray	Cable Range mm	Threaded OD C1	Threaded Length C2	Spanner Size	boxing pcs
M Type Short Threaded	M16*1.5	M16-AS-0207	B	G	2.3*7.1	16	10	22/19	50
		M16-A-0610	B	G	6*10	16	10	22/22	50
	M20*1.5	M20-AS-0610	B	G	6*10	20	10	24/22	50
		M20-AM-0511	B	G	5*11.5	20	15	24/24	50
		M20-A-0612	B	G	6.5*12	20	10	27/27	50
		M20-A-0614	B	G	6*14	20	10	27/27	50
		M20-A-0712	B	G	7*12	20	10	27/27	50
		M20-A-0714	B	G	7*14	20	10	27/27	50
	M25*1.5	M25-AS-0612	B	G	6.5*12	25	12	33/27	50
		M25-AS-0614	B	G	6*14	25	12	33/27	50
		M25-AS-0712	B	G	7*12	25	12	33/27	50
		M25-AS-0714	B	G	7*14	25	12	33/27	50
		M25-A-0614	B	G	6*14	25	10	33/33	50
		M25-A-0714	B	G	7*14	25	10	33/33	50
	M32*1.5	M32-AS-0614	B	G	6*14	32	12	41/33	10
		M32-AS-0714	B	G	7*14	32	12	41/33	10
		M32-A-0822	B	G	8*22	32	11	41/42	10
	M40*1.5	M40-A-1028	B	G	10*28.5	40	12	50/52	10
		M40-A-0529	B	G	5.5*29	40	12	50/52	10

Cable Gland Series

Metric Threaded										
M Type Long Threaded	M12*1.5	M12-Z-0207	B	G	2.3*7.1	12	9	18/19	50
	M16*1.5	M16-Z-0610	B	G	6*10	16	15	22/22	50
	M20*1.5	M20-Z-0612	B	G	6.5*12	20	15	27/27	50
		M20-Z-0614	B	G	6*14	20	15	27/27	50
		M20-Z-0712	B	G	7*12	20	15	27/27	50
		M20-Z-0714	B	G	7*14	20	15	27/27	50
	M25*1.5	M25-Z-0614	B	G	6*14	25	15	33/33	50
		M25-Z-0714	B	G	7*14	25	15	33/33	50
	M32*1.5	M32-Z-0822	B	G	8*22	32	15	41/42	10
	M40*1.5	M40-Z-1028	B	G	10*28.5	40	20	50/52	10
		M40-Z-0529	B	G	5.5*29	40	20	50/52	10
Germany Threaded										
PG7		PG-7-0207	B	G	2.3*7.1	12.5	8.5	17/19	50
PG9		PG-9-0207	B	G	2.3*7.1	15.2	9	22/19	50
PG11		PG-11-0610	B	G	6*10	18.6	10	24/22	50
PG13.5		PG-13.5-0511	B	G	5*11.5	20.4	10	27/24	50
PG16		PG-16-0612	B	G	6.5*12	22.5	11	30/27	50
		PG-16-0614	B	G	6*14	22.5	11	30/27	50
		PG-16-0712	B	G	7*12	22.5	11	30/27	50
		PG-16-0714	B	G	7*14	22.5	11	30/27	50
PG21		PG-21-0614	B	G	6*14	28.3	12.5	36/33	50
		PG-21-0714	B	G	7*14	28.3	12.5	36/33	50
PG29		PG-29-0822	B	G	8*22	37	12	46/42	10
PG36		PG-36-1028	B	G	10*28.5	47	15	57/52	10
		PG-36-0529	B	G	5.5*29	47	15	57/52	10
America Threaded										
NPT-3/8		NPT-3/8-0610	B	G	6*10	17.055	13	22	50
NPT-1/2		NPT-1/2-0612	B	G	6.5*12	21.223	13	27	50
		NPT-1/2-0614	B	G	6*14	21.223	13	27	50
		NPT-1/2-0712	B	G	7*12	21.223	13	27	50
		NPT-1/2-0714	B	G	7*14	21.223	13	27	50
NPT-3/4		NPT-3/4-0614	B	G	6*14	26.568	15	33	50
		NPT-3/4-0714	B	G	7*14	26.568	15	33	50
NPT-1		NPT-1-0822	B	G	8*22	33.227	17	42	1

Cable Gland Series

Threaded Type		U.K Threaded Products Type	Black	Gray	Cable Range (mm)	Threaded OD C1 (mm)	Threaded Length C2 (mm)	Spanner Size	boxing pcs
G	1/4	G-1/4-0207	B	G	2.3*7.1	13.157	9	19/19	50
	3/8	G-3/8-0610	B	G	6*10	16.662	10	22/22	50
	1/2	G-1/2-0610	B	G	6*10	20.955	10	27/22	50
		G-1/2-0511	B	G	5*11.5	20.955	10	27/24	50
		G-1/2-0612	B	G	6.5*12	20.955	10	27/27	50
		G-1/2-0614	B	G	6*14	20.955	10	27/27	50
		G-1/2-0712	B	G	7*12	20.955	10	27/27	50
		G-1/2-0714	B	G	7*14	20.955	10	27/27	50
	3/4	G-3/4-0612	B	G	6.5*12	26.441	12	33/27	50
		G-3/4-0614	B	G	6*14	26.441	12	33/27	50
		G-3/4-0712	B	G	7*12	26.441	12	33/27	50
		G-3/4-0714	B	G	7*14	26.441	12	33/27	50
		G-3/4-0614	B	G	6*14	26.441	12.5	33/33	50
		G-3/4-0714	B	G	7*14	26.441	12.5	33/33	50
	1	G-1-0614	B	G	6*14	33.249	12	42/33	10
		G-1-0714	B	G	7*14	33.249	12	42/33	10
		G-1-0822	B	G	8*22	33.249	15	42/42	10
	1 1/4	G-1 1/4-1028	B	G	10*28.5	41.91	15	53/52	10
		G-1 1/4-0529	B	G	5.5*29	41.91	15	53/52	10

Cable Gland Series

KLS8-0615

- Material: UL approved Nylon 66, 94V-2.
- Color: Black,Gray colors.
- ambient temperature : quiescent state -40oC to 100oC , short time 120oC dynamic

※ Protection: IP68 (oniy if the washer is assembled)



Order Information

Product No.: KLS8-0615

Pos. No.

Series No.

Cable Gland Series

KLS8-0616-MG Metric Threaded Nylon Cable Gland Series

Threaded entry: Metric
Color: Black and Grey
Working temperature: -40°C-100°C, the item can also endure 120°C instantly
protection: IP68
Standard: IEC698

Unit:mm



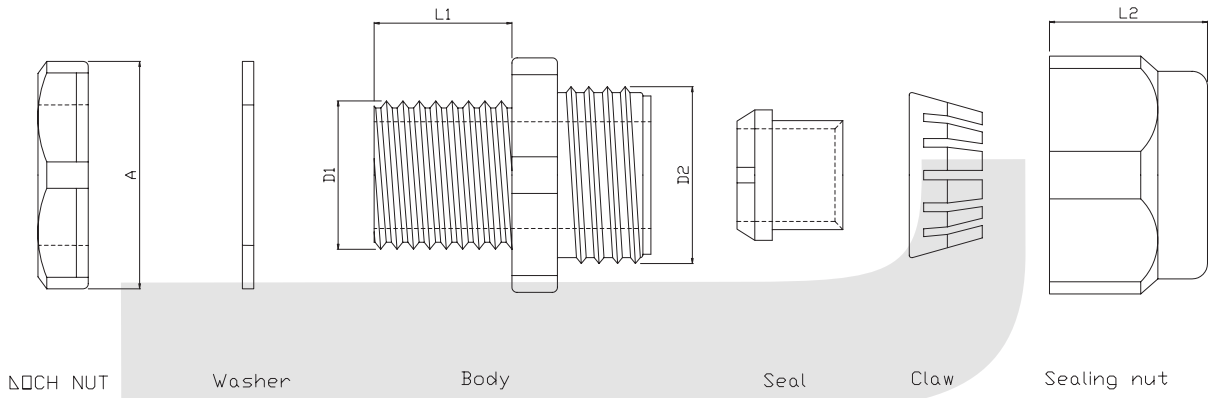

ITEM.NO.	Threaded entry metric(mm)	Cable range Φ(mm)	D1	D2	Panel mounting hole(mm)	L1	L2	A(mm)
MG-12	M12×1.25	7.6-4.6	12	M16×1.5	12.5	8.5	16	19
MG-16	M16×1.5	10-6	16	M20×1.5	16.5	15	19.5	24
MG-20	M20×1.5	14-9	20	M25×1.5	20.5	15	21.5	30
MG-25	M25×1.5	18-13	25	M31×2	25.5	15	24.5	36
MG-32	M32×1.5	25-18	32	M38×2	33	15	27.5	46
MG-40	M40×1.5	30-24	40	M46×2	41	20	31	54
MG-50	M50×1.5	39-30	50	M58×2	51	23	37	67
MG-63	M63×1.5	48.5-40	63	M72×2	64	24	42	81.5

ORDER INFORMATION

KLS8-0616 - MG-12

- MG-12: Item. No.
- KLS8-0616: Metric Threaded Nylon cable glands Series
- KLS8: Part Number

Cable Clip Series

KLS8-0702 Cable Clip Series

Material: PE (White), fixable, good elasticity, to bear collision, unable broken.

Inserted nail, stick to plastic seat, save time and cost down.

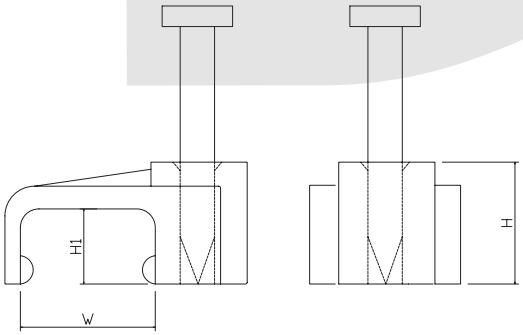



ITEM. NO.	H(mm)	H1	W	NAIL	Color
KLS8-0702-NB-2.5MM	3.5	2.0	2.5	1.4×15	
KLS8-0702-NB-4MM	5.5	3.5	4.0	1.7×14	WHITE
KLS8-0702-NB-5MM	5.5	3.5	5.0	1.7×14	
KLS8-0702-NB-6MM	6.0	4.1	6.0	1.7×16	GREY
KLS8-0702-NB-7MM	6.5	4.7	7.0	1.9×16	
KLS8-0702-NB-8MM	7.0	5.0	8.0	2.1×19	BLACK
KLS8-0702-NB-9MM	8.0	5.4	9.0	2.1×20	
KLS8-0702-NB-10MM	8.0	5.6	10.0	2.3×21	BROWN
KLS8-0702-NB-12MM	8.5	5.6	12.0	2.3×23	
KLS8-0702-NB-14MM	10.0	7.0	14.0	2.3×23	DARK GREY
KLS8-0702-NB-18MM	12.5	8.5	18.0	2.6×27	
KLS8-0702-NB-19MM	14.0	10.5	19.0	2.6×27	

ORDER INFORMATION

KLS8-0702 - NB-2.5mm

- Item. NO.
- Cable Clip Series
- Part Number

Cable Clip Series

KLS8-0704 Cable Clip Series

Material: PE, fixable, good elasticity, to bear collision, unable broken.

Color: Nature

Insert nail, nail stick to plastic seat, save time and cost down.

Unit:mm

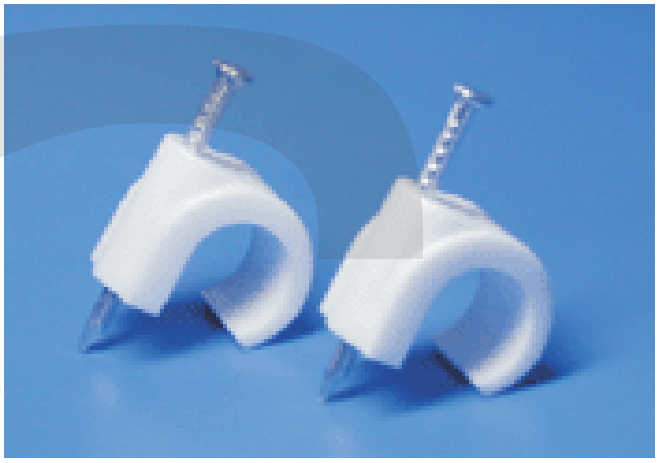

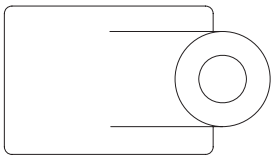

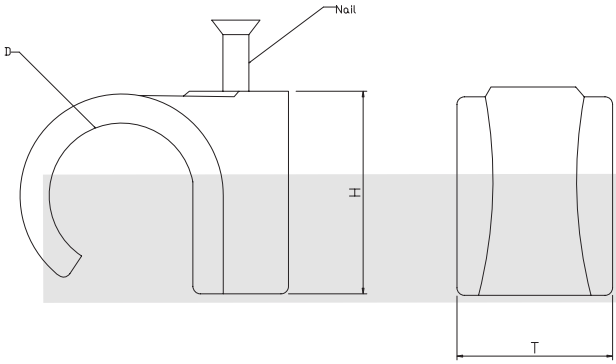

ITEM. No.	T	H	D	Suitable Cables	Nails (mm)	Package
KLS8-0704-NC-1	7.0	5.0	Ø3.2	Max diameterØ3.2	Ø1.5×21	100
KLS8-0704-NC-2	6.0	7.0	Ø5.0	Max diameterØ5.0	Ø1.8×26	100
KLS8-0704-NC-3	8.8	9.2	Ø7.2	Max diameterØ7.2	Ø1.8×26	100
KLS8-0704-NC-4	9.6	12.5	Ø9.8	Max diameterØ9.8	Ø1.8×26	100
KLS8-0704-NC-5	11.8	16.6	Ø14.0	Max diameterØ14.0	Ø2.5×40	100

ORDER INFORMATION

KLS8-0704 - NC-1

- Item. NO.
- Cable Clip Series
- Part Number

Cable Clip Series

KLS8-0707 Cable Clip Series

Material: PE, fixable, good elasticity, to bear collision, unable broken.

Inserted nail, stick to plastic seat, save time and cost down.

Application: Securing of cables for general indoor wiring.

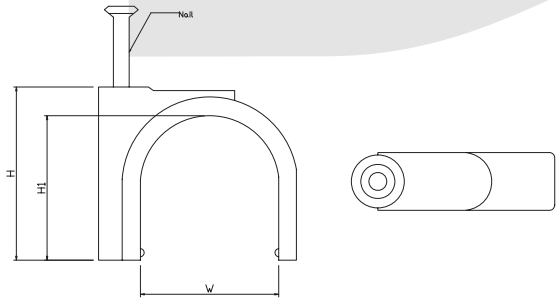



ITEM. NO.	H （mm）	W(mm)	NAIL	COLOR
KLS8-0707-NC-3MM	3. 6	3. 0	1. 4×15	
KLS8-0707-NC-3. 5MM	4. 2	3. 5	1. 47×14	
KLS8-0707-NC-4MM	5. 3	4. 0	1. 7×14	
KLS8-0707-NC-5MM	6. 5	5. 0	1. 7×14	
KLS8-0707-NC-6MM	8. 0	6. 0	1. 82×16	
KLS8-0707-NC-7MM	8. 7	7. 0	1. 82×18	
KLS8-0707-NC-8MM	9. 5	8. 0	1. 95×19	
KLS8-0707-NC-9MM	11. 0	9. 0	2. 05×22	WHITE
KLS8-0707-NC-10MM	12. 0	10. 0	2. 1×23	
KLS8-0707-NC-12MM	13. 0	12. 0	2. 2×25	GREY
KLS8-0707-NC-14MM	15. 0	14. 0	2. 3×30	
KLS8-0707-NC-16MM	17. 0	16. 0	2. 35×32	BLACK
KLS8-0707-NC-17MM	20. 0	17. 0	2. 6×38	
KLS8-0707-NC-18MM	20. 8	18. 0	2. 6×38	BROWN
KLS8-0707-NC-20MM	23. 5	20. 0	2. 7×40	
KLS8-0707-NC-22MM	25. 0	22. 0	2. 9×43	DARK GREY
KLS8-0707-NC-25MM	27. 7	25. 0	3. 1×50	
KLS8-0707-NC-30MM	32. 5	30. 0	3. 5×55	
KLS8-0707-NC-32MM	34. 5	32. 0	3. 5×55	
KLS8-0707-NC-35MM	36. 6	35. 0	3. 5×60	
KLS8-0707-NC-40MM	45. 2	40. 0	3. 5×65	

ORDER INFORMATION

KLS8-0707 - NC-3. 5mm

- Item. NO.
- Cable Clip Series
- Part Number

Cable Clip Series

KLS8-0708 Cable Clip Series

Material : PE,fixable,good elasticity,to bear collision, unable broken.
Color : Nature
Insert nail,nail stick to plastic seat,save time and cost down.

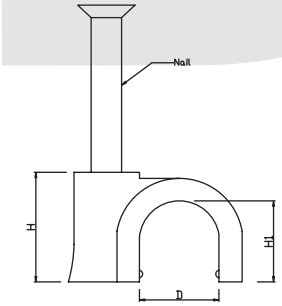

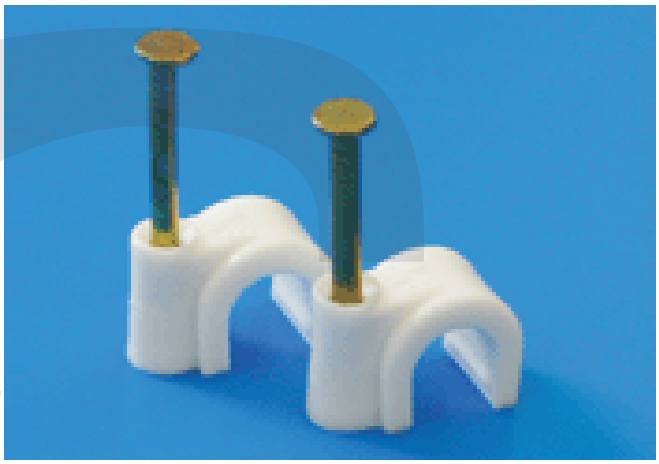

ITEM. NO.	H （mm）	CLRCLE PATH D(mm)	NAIL	COLOR
KLS8-0708-NF-3MM	3. 6	3. 0	1. 4×15	
KLS8-0708-NF-3. 5MM	4. 2	3. 5	1. 47×14	
KLS8-0708-NF-4MM	5. 3	4. 0	1. 7×14	
KLS8-0708-NF-5MM	6. 0	5. 0	1. 7×14	
KLS8-0708-NF-6MM	8. 0	6. 0	1. 82×16	
KLS8-0708-NF-7MM	8. 7	7. 0	1. 82×18	
KLS8-0708-NF-8MM	9. 5	8. 0	1. 95×19	WHITE
KLS8-0708-NF-9MM	11. 0	9. 0	2. 05×22	
KLS8-0708-NF-10MM	12. 0	10. 0	2. 1×23	GREY
KLS8-0708-NF-12MM	13. 5	12. 0	2. 2×25	
KLS8-0708-NF-14MM	16. 5	14. 0	2. 3×30	BLACK
KLS8-0708-NF-16MM	18. 0	16. 0	2. 35×32	
KLS8-0708-NF-17MM	20. 0	17. 0	2. 6×38	BROWN
KLS8-0708-NF-18MM	20. 5	18. 0	2. 6×38	
KLS8-0708-NF-20MM	22. 5	20. 0	2. 7×40	DARK GREY
KLS8-0708-NF-22MM	23. 5	22. 0	2. 9×43	
KLS8-0708-NF-25MM	26. 5	25. 0	3. 1×50	
KLS8-0708-NF-30MM	32. 5	30. 0	3. 5×55	
KLS8-0708-NF-32MM	34. 5	32. 0	3. 5×55	
KLS8-0708-NF-35MM	38. 0	35. 0	3. 5×60	
KLS8-0708-NF-40MM	43. 8	40. 0	3. 5×65	

ORDER INFORMATION

KLS8-0708 - NF-3. 0mm
- Item. NO.
- Cable Clip Series
- Part Number

Cable Clip Series

KLS8-0709 DOUBLE NAIL CABLE CLIP Series

Material : PE(white),fixable,good elasticity, to bear impact, unable broken.
Suitable to firm up the big flat wires.
Double nail could strengthen adhesion to avoid come off.



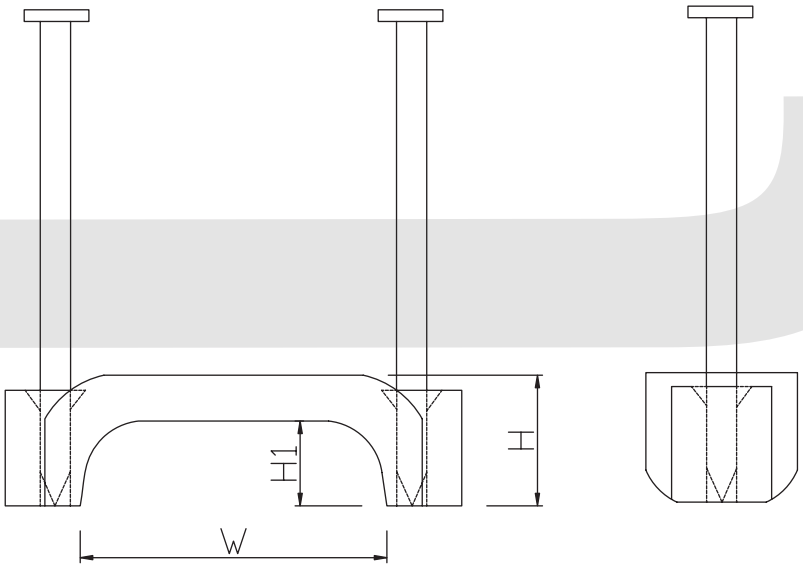

ITEM No.	W(mm)	H(mm)	H1(mm)	Suitable Cables	Nails	Package
KLS8-0709-NA-13	12.5	8.0	5.3	Big flat wires	1.86x31	100
KLS8-0709-NA-19	18.7	8.0	5.3	Big flat wires	1.86x31	100

ORDER INFORMATION

KLS8-0709 - NA-13

- Item. NO.
- Cable Clip Series
- Part Number

Cable Clip Series

KLS8-0710 Plastic Conical Anchors Series

Material : PP



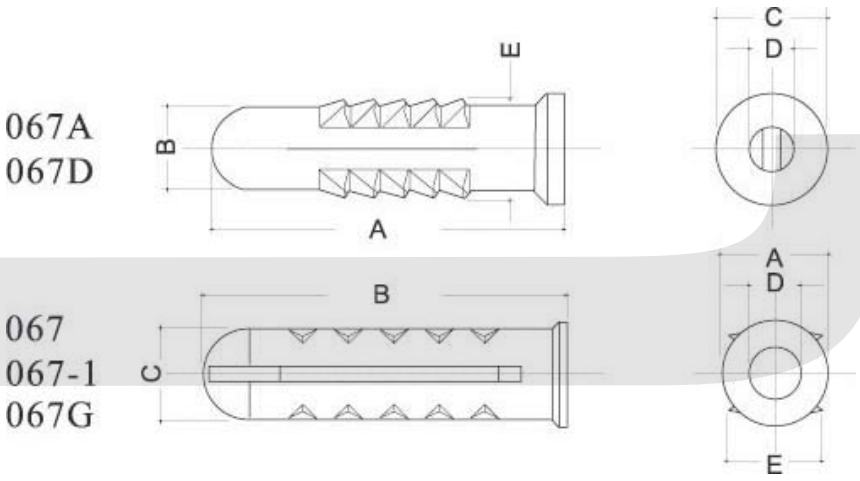

ITEM. No.	Material	A	B	C	D	E	Packaging
067	PP	ø7	24.0	ø6	ø3	6.7	2000
067-1		ø7	24.0	ø6	ø3	6.0	
067A		24.0	ø6	ø7.5	ø3	5.7	
067D		23.5	ø6	ø7.5	ø3	7.0	
067G		ø8	28.0	ø6	ø3	7.7	

ORDER INFORMATION

KLS8-0710 - 067

- 067 — Item. NO.
- 0710 — Plastic Conical Anchors Series
- KLS8 — Part Number

Cable Clip Series

KLS8-0711 Plastic Conical Anchors Series

Material : PP



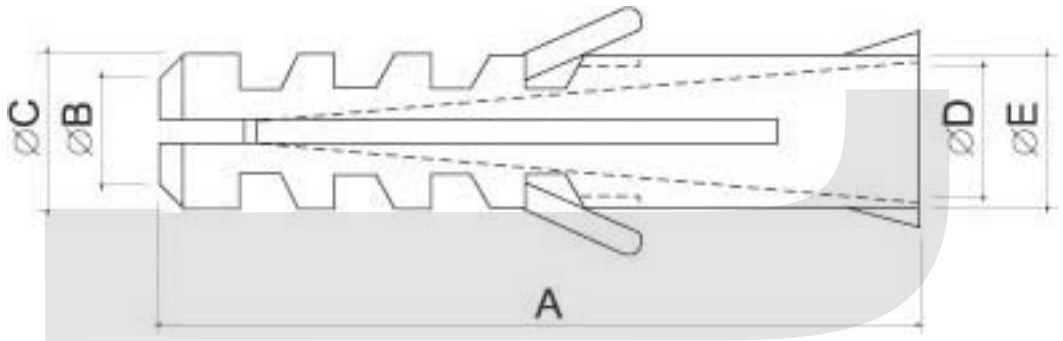

ITEM. No.	A	B	C	D	E	Packaging
PEB6-25	24.7	3.5	4.8	4	5	1000
PEB6-30	29.6	4	6	4.8	6	

ORDER INFORMATION

KLS8-0711 - PEB6-25

- PEB6-25: Item. NO.
- KLS8-0711: Plastic Conical Anchors Series
- KLS8: Part Number

PCB Support Series

KLS8-0201 PCB Support Series

Material: UL Approved Nylon66, 94V-2
Installed easily and quickly by hand.
Barbed arrow mounts on both ends locking securely.
This support can be shaped to lock in the board for PCB / PCB or PCB / CHASSIA spacer



Unit:mm

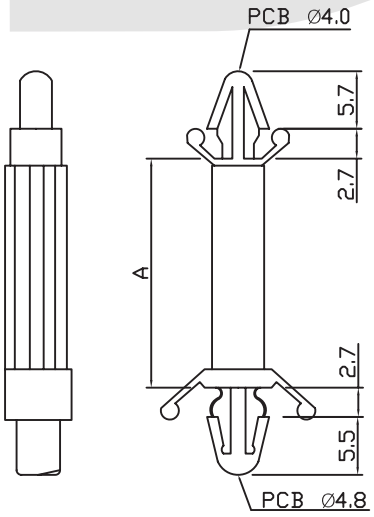

Item No.	A	Packing
CS-0305	4.8(3/16″)	
CS-0406	6.4(1/4″)	
CS-0610	9.6(3/8″)	
CS-0813	12.7(1/2″)	
CS-1016	15.9(5/8″)	100PCS
CS-1219	19.1(3/4″)	(1000PCS)
CS-1422	22.2(7/8″)	
CS-1625	25.4(1″)	
CS-1828	28.5(1 1/8″)	
CS-2236	35.0(1 3/8″)	

ORDER INFORMATION

KLS8-0201-CS-0305

- Hight
- PCB Support Series
- Part Number

PCB Support Series

KLS8-0234 PCB Support Series

Material: UL approved Nylon 66, 94V-2
by hand to support P.C.B. Can be removed for replacement easily.



Unit:mm

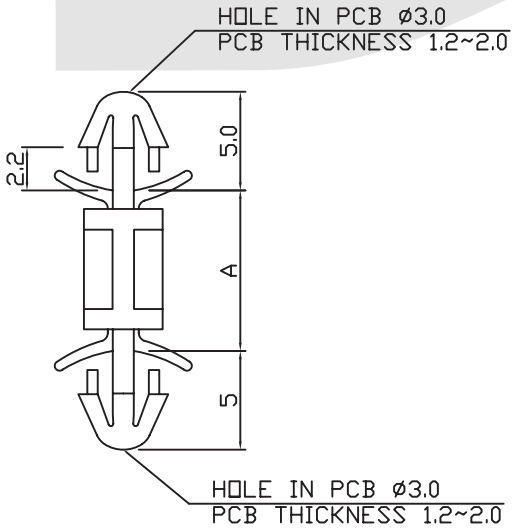

Part No.	Spacing Height "A" ±0.3mm	Package
BLG-03	3.2	1000PCS
BLG-04	4	1000PCS
BLG-05	5	1000PCS
BLG-06	6.3	1000PCS
BLG-07	7	1000PCS
BLG-08	8	1000PCS
BLG-09	9.5	1000PCS
BLG-11	11.2	1000PCS
BLG-12	12	1000PCS
BLG-15	15	1000PCS
BLG-17	17	1000PCS
BLG-20	20.2	1000PCS
BLG-25	25.4	1000PCS

ORDER INFORMATION

KLS8-0234 - BLG-03

- BLG-03: Hight
- KLS8-0234: PCB Support Series
- KLS8: Part Number

PCB Support Series

KLS8-0239 PCB Support Series

Material: UL approved Nylon 66, 94V-2
TO Fit 5.5mm hole

Unit:mm

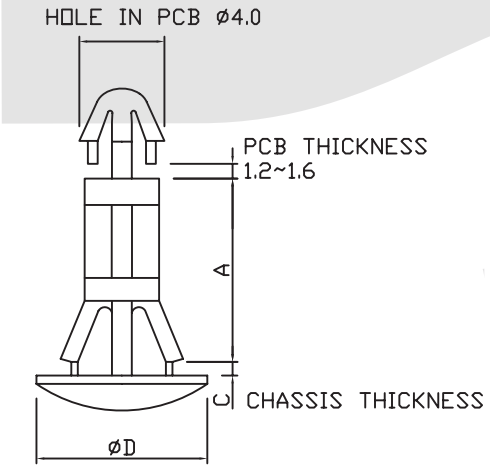



Model No.	A	C	D	Package
BSC-03	3.5	1.0~2.0	10	1000 PCS
BSC-05	5	1.0~2.0	10	1000 PCS
BSC-06	6	1.0~2.0	10	1000 PCS
BSC-07	7	1.0~2.0	10	1000 PCS
BSC-08	8	1.0~2.0	10	1000 PCS
BSC-10	10	1.0~2.0	10	1000 PCS
BSC-12	12	1.0~2.0	10	1000 PCS
BSC-14	14	1.0~2.0	10	1000 PCS
BSC-16	16	1.0~2.0	10	1000 PCS
BSC-18	18	1.0~2.0	10	1000 PCS

ORDER INFORMATION

KLS8-0239 - BSC-03

- Hight
- PCB Support Series
- Part Number

PCB Support Series

KLS8-0209 PCB Support Series

Material: UL approved Nylon 66, 94V-2
TO Fit 5.5mm hole

Unit:mm

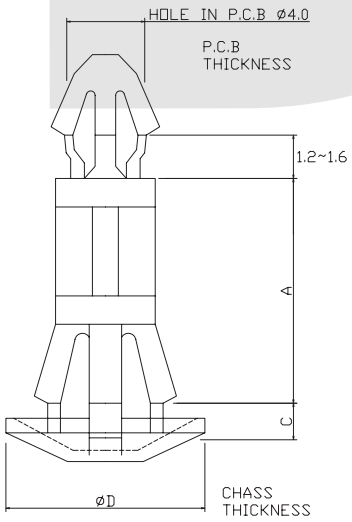

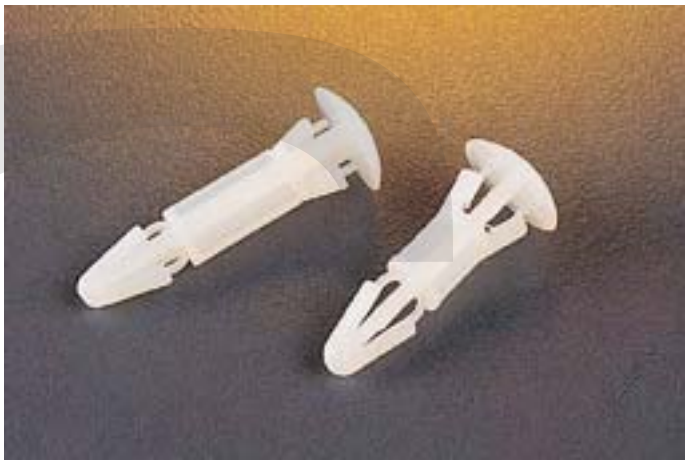

Model No.	A	C	D	Package
BSD-03	3.5	1.0~1.8	10	1000 PCS
BSD-05	5	1.0~1.8	10	1000 PCS
BSD-06	6	1.0~1.8	10	1000 PCS
BSD-07	7	1.0~1.8	10	1000 PCS
BSD-08	8	1.0~1.8	10	1000 PCS
BSD-10	10	1.0~1.8	10	1000 PCS
BSD-12	12	1.0~1.8	10	1000 PCS
BSD-14	14	1.0~1.8	10	1000 PCS
BSD-16	16	1.0~1.8	10	1000 PCS
BSD-18	18	1.0~1.8	10	1000 PCS

ORDER INFORMATION

KLS8-0209 - BSD-03

- Hight
- PCB Support Series
- Part Number

PCB Support Series

KLS8-0227 PCB Support Series

Material: UL approved Nylon 66, 94V-2
by hand to support P.C.B. Can be removed for replacement easily.

Unit:mm



ITEM NO.	A
BLK-03	3.5
BLK-05	4.8
BLK-06A	6.0
BLK-06B	6.4
BLK-08	7.9
BLK-09	9.5
BLK-11	11.1
BLK-12	12.7
BLK-16	15.9
BLK-19	19.1
BLK-22	22.2
BLK-25	25.4
BLK-28	28.6
BLK-31	31.7
BLK-35	34.9

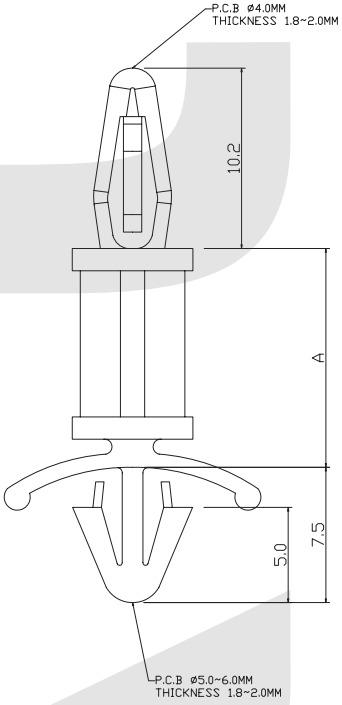

ORDER INFORMATION

KLS8-0227 - BLK-03

- Hight
- PCB Support Series
- Part Number

PCB Support Series

KLS8-0202 PCB Support Series

Material : UL Approved Nylon66, 94V-2
Easily installed by hand to lock securely.
Easily removed by pinching prong tips
No tools are required.
Unit:mm

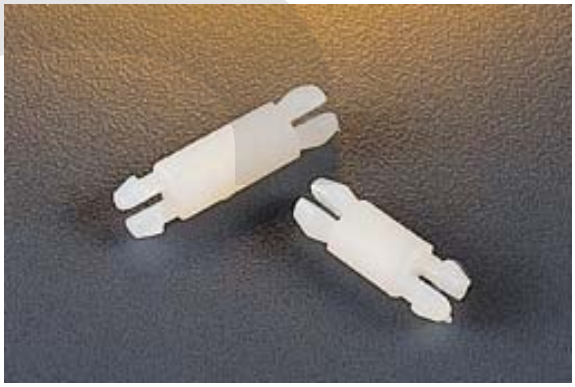

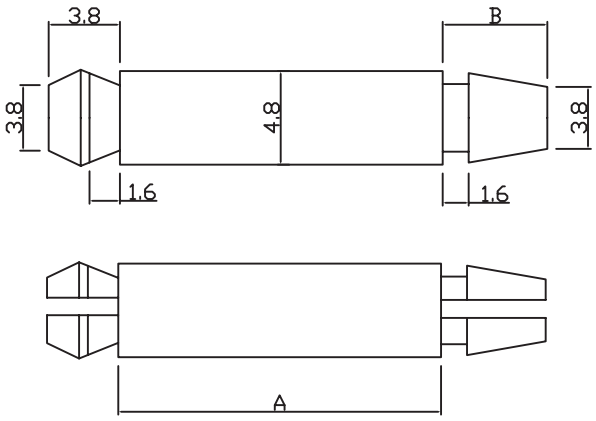

Item No.	A	B	Packing
SP-03	3.2	3.8	100PCS (1000PCS)
SP-06	6.3	3.8	
SP-08	8	3.8	
SP-10	10.5	3.8	
SP-13	12.7	5.6	
SP-16	15.9	5.6	
SP-17	16.5	5.6	
SP-19	19.1	5.6	
SP-22	22.2	5.6	
SP-25	25.4	5.6	

ORDER INFORMATION

KLS8-0202 - SP-03

- SP-03: Hight
- 0202: PCB Support Series
- KLS8: Part Number

PCB Support Series

KLS8-0235 PCB Support Series

Material: UL approved Nylon 66, 94V-2
by hand to support P.C.B. Can be removed
for replacement easily.

Unit:mm

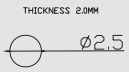



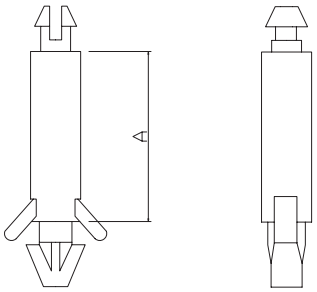

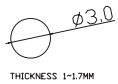

Part No.	Spacing Height "A"±0.3mm (inch)	Package
LCA-03	3.2	1000PCS
LCA-04	4.0	
LCA-05	5.0	
LCA-06	6.3	
LCA-07	7.0	
LCA-08	8.0	
LCA-09	9.0	
LCA-10	10.0	
LCA-12	12.0	
LCA-15	15.8	

ORDER INFORMATION

KLS8-0235 - LCA-03

- LCA-03: Hight
- KLS8-0235: PCB Support Series
- KLS8: Part Number

PCB Support Series

KLS8-0237 PCB Support Series

Material: UL approved Nylon 66, 94V-2
Drill 4mm hole on both P.C.B. board and chasis before usage.
For application where the space is limited and extra height is prohibited

Unit:mm



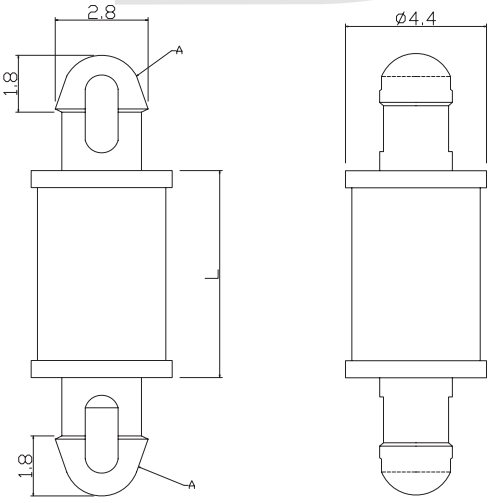

"A" HOLE IN P.C.B ø2.54
P.C.B THICKNESS 1.6MM

Part No.	Spacing Height "L" ±0.3mm (inch)	Package
LCA-03	3.9	1000PCS
LCA-04	4.8	
LCA-06	6.4	
LCA-08	8.0	
LCA-09	9.5	
LCA-12	12.7	
LCA-15	15.9	

ORDER INFORMATION

KLS8-0237 - LCA-03
- LCA-03: Hight
- 0237: PCB Support Series
- KLS8: Part Number

PCB Support Series

KLS8-0224 PCB Support Series

Material: UL approved Nylon 66, 94V-2

Long:20mm Width:20mm

Unit:mm



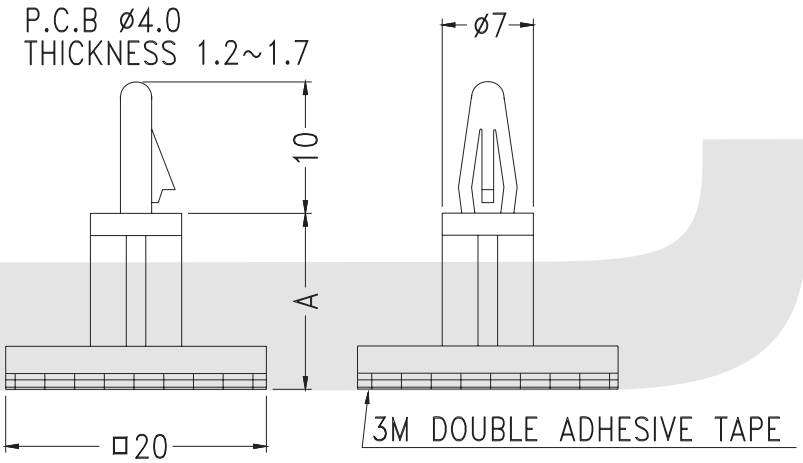

Part No.	Spacing Height "A" ±0.3mm (inch)	Package
CPP-05	5.4	500PCS
CPP-06	6.4	
CPP-08	8.0	
CPP-10	9.9	
CPP-12	12.9	
CPP-16	16.3	

ORDER INFORMATION

KLS8-0224 - CPP-05

- Hight
- PCB Support Series
- Part Number

PCB Support Series

KLS8-0207 PCB Support Series

Material: UL approved Nylon 66, 94V-2

Unit:mm



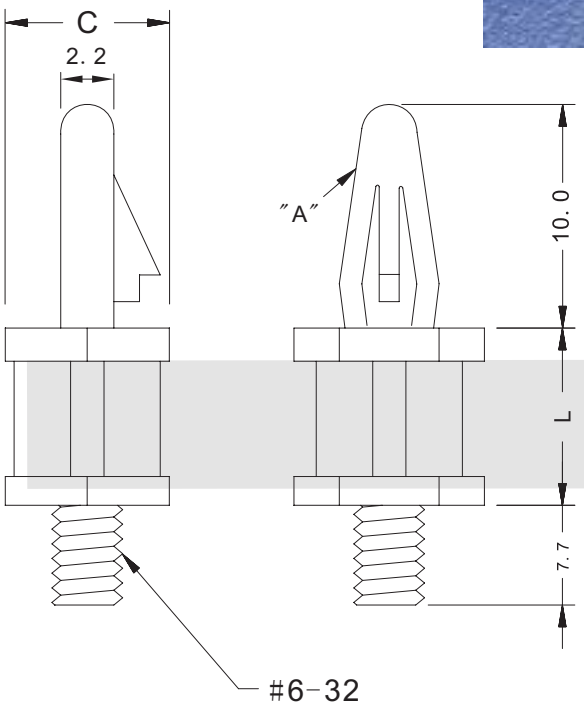

"A" HOLE IN P.C.B ⌀4.0
P.C.B THICKNESS 1.6

ITEM NO.	L	C	Packing
PSU-06	6.3	7.8	1000PCS
PSU-10	9.5	7.8	1000PCS
PSU-12	12.7	7.8	1000PCS
PSU-15	15.9	7.8	1000PCS

ORDER INFORMATION

KLS8-0207 - PSU-06

- Hight
- PCB Support Series
- Part Number

PCB Support Series

KLS8-0238 PCB Support Series

Material: UL approved Nylon 66, 94V-2

Unit:mm



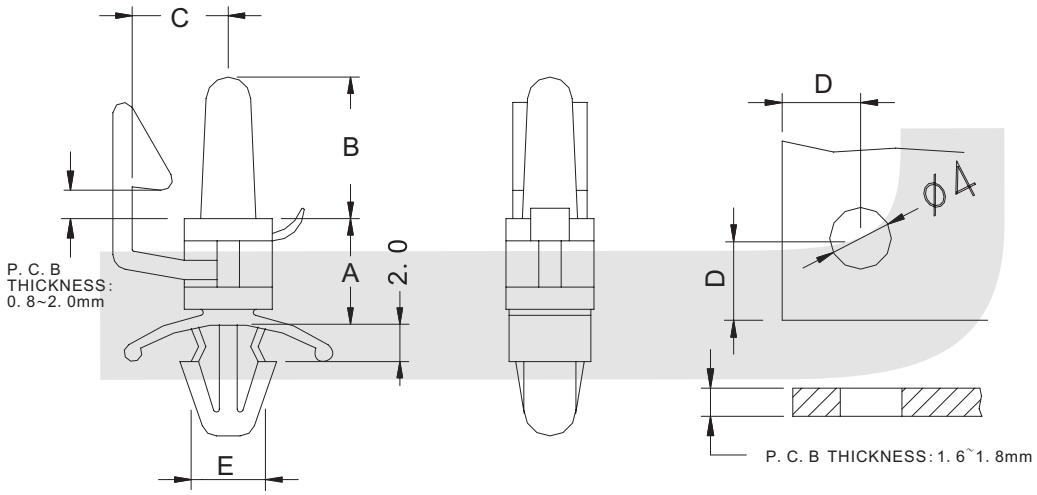

Item No.	Dimension					Packing
	A	B	C	D	E	
LTP-10	9.2	7.4	5.5	5.0	5.2	500pcs
LTP-12	11.9	7.4	5.5	5.0	5.2	
LTP-15	15.1	7.4	5.5	5.0	5.2	
LTP-18	17.2	7.4	5.5	5.0	5.2	
LTP-26	26.2	7.4	5.5	5.0	5.2	

ORDER INFORMATION

KLS8-0238 - LTP-10

- LTP-10: Hight
- KLS8-0238: PCB Support Series
- KLS8: Part Number

PCB Support Series

KLS8-0212 PCB Support Series

Material: UL approved Nylon 66, 94V-2

Unit:mm



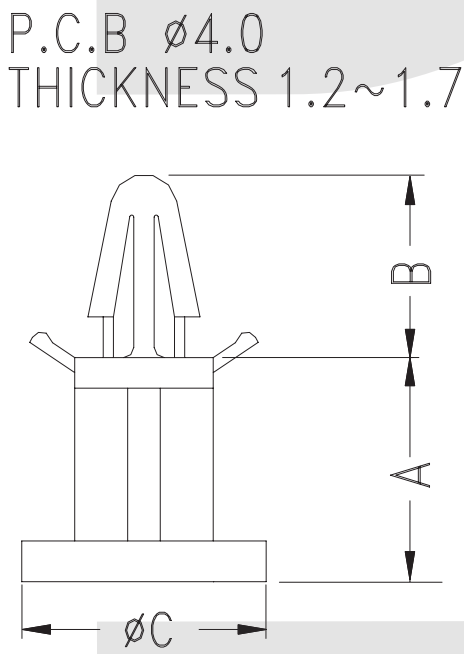

Item No.	A	B	C	Packing
BMS-5	5.6	9.5	11.8	100pcs (1000pcs)
BMS-5L7	5.6	9.5	7.1	
BMS-7	6.5	9.5	11.8	
BMS-8	8.0	9.5	11.8	
BMS-11	11.0	9.0	12.0	

ORDER INFORMATION

KLS8-0212 - BMS-5

- Hight
- PCB Support Series
- Part Number

PCB Support Series

KLS8-0213 PCB Support Series

Material: UL approved Nylon 66, 94V-2

Unit:mm





Item No.	A	Packing
MS-6	6.4	100pcs(1000pcs)

ORDER INFORMATION

KLS8-0213 - MS-6

- Hight
- PCB Support Series
- Part Number

PCB Support Series

KLS8-0204 PCB Support Series

Material: UL approved Nylon 66, 94V-2
Drills holes on chassis board as shown.

Unit:mm

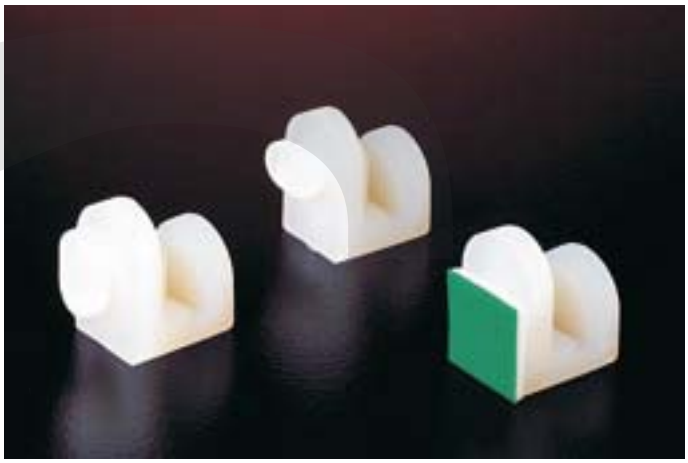

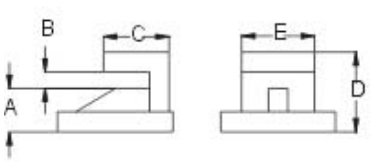

ES-5A

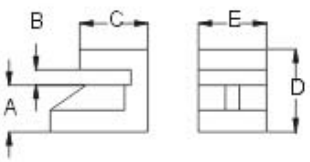

ES-6A

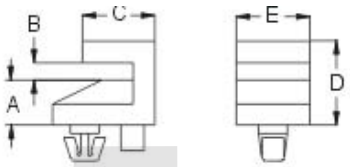

ES-6M

ADHESIVE TAPE

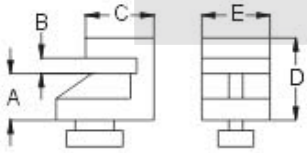

ES-6P

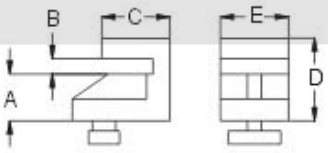

ES-6V

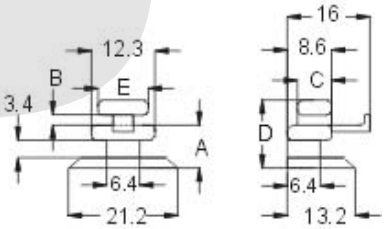

ES-8U

Item No.	A	B	C	D	E	Packing
ES-5A	5.4	2.2	5.0	10.3	9.5	100pcs
ES-6A	6.0	1.9	9.0	10.8	8.7	
ES-6M	5.8	2.2	9.3	10.7	9.5	
ES-6P	6.0	1.9	9.0	10.8	8.7	
ES-6V	6.0	1.9	9.0	10.8	8.7	
ES-8U	8.4	2.0	6.7	10.3	9.8	

ORDER INFORMATION

KLS8-0204 - ES-5A

- Hight
- PCB Support Series
- Part Number

PCB Support Series

KLS8-0210 PCB Support Series

Material: UL approved Nylon 66, 94V-2

Unit:mm

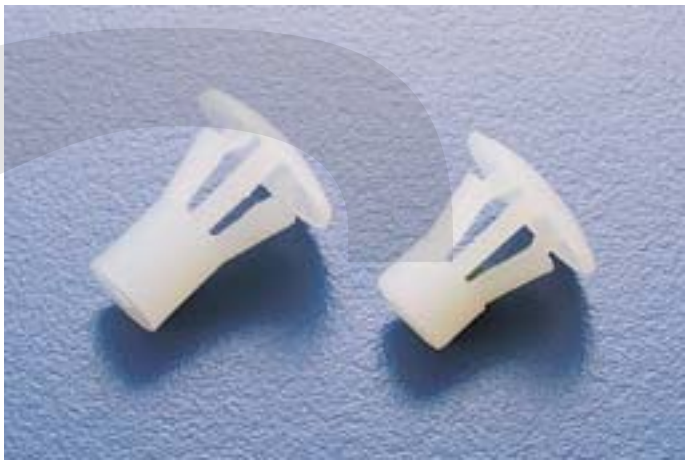

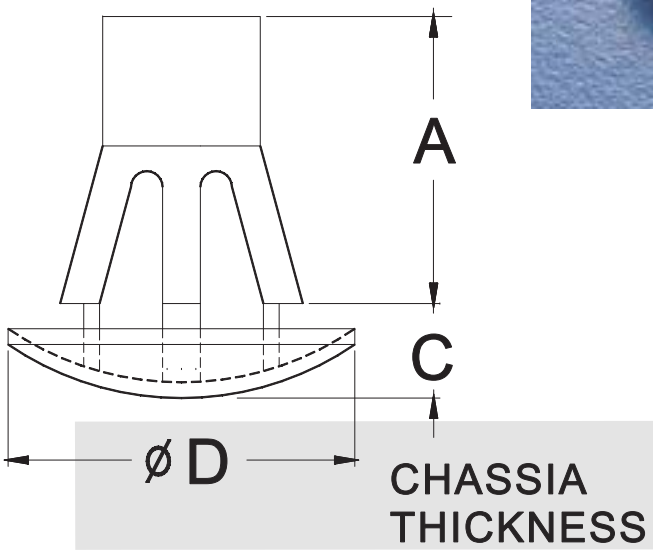

Model No.	A	C	D	Package
PSE-05	5.00	1.0~1.8	10.00	1000 PCS
PSE-06	6.40	1.0~1.8	10.00	
PSE-08	8.00	1.0~1.8	10.00	
PSE-09	9.80	1.0~1.8	10.00	
PSE-10	10.10	1.0~1.8	10.00	
PSE-12	12.00	1.0~1.8	10.00	
PSE-14	14.00	1.0~1.8	10.00	
PSE-18	18.00	1.0~1.8	10.00	

ORDER INFORMATION

KLS8-0210 - PSE-05

- Hight
- PCB Support Series
- Part Number

PCB Support Series

KLS8-0203 PCB Support Series

Material: UL approved Nylon 66, 94V-2

Unit:mm



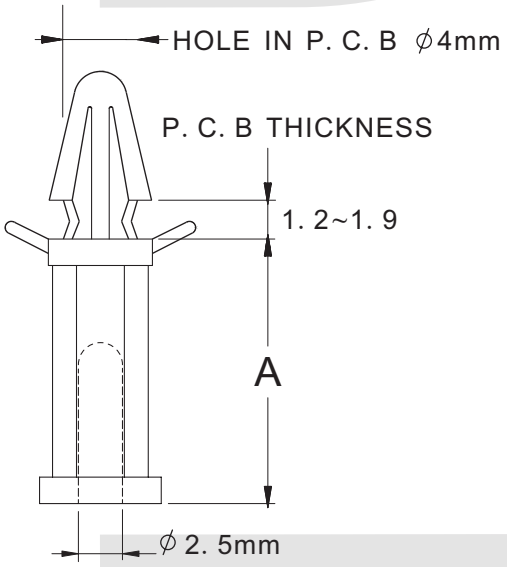

Item No.	A	Packing
PS-05	4. 8(3/16″)	100PCS (1000PCS)
PS-06	6. 4(1/4″)	
PS-10	9. 6(3/8″)	
PS-13	12. 7(1/2″)	
PS-16	15. 9(5/8″)	
PS-19	19. 1(3/4″)	
PS-22	22. 2(7/8″)	
PS-25	25. 4(1″)	
PS-28	28. 5(1 1/8″)	
PS-36	35. 0(1 3/8″)	

ORDER INFORMATION

KLS8-0203 - PS-05

- Hight
- PCB Support Series
- Part Number

PCB Support Series

KLS8-0208 PCB Support Series

Material: UL approved Nylon 66, 94V-2
Drill 3.0mm hole on chasis before usage.

Unit:mm

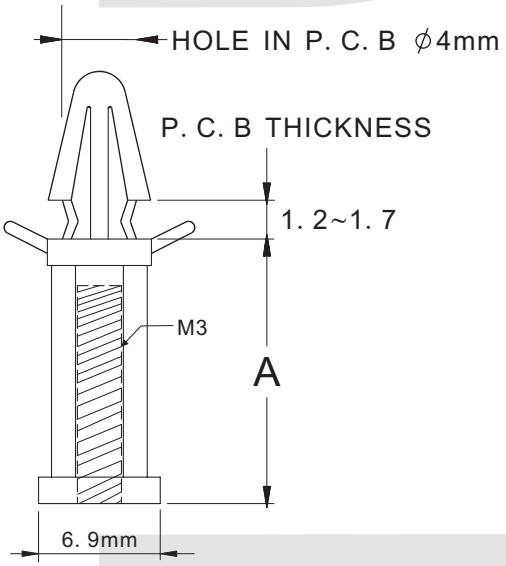



Item No.	A	Packing
CS-5	5.0(3/16″)	100pcs (1000pcs)
CS-10	9.6(3/8″)	
CS-13	12.7(1/2″)	
CS-19	19.1(3/4″)	
CS-28	28.5(1 1/8″)	
CS-35	35.0(1 3/8″)	

ORDER INFORMATION

KLS8-0208 - CS-5

- Hight
- PCB Support Series
- Part Number

PCB Support Series

KLS8-0221 PCB Support Series

Material: UL approved Nylon 66, 94V-2

Unit:mm



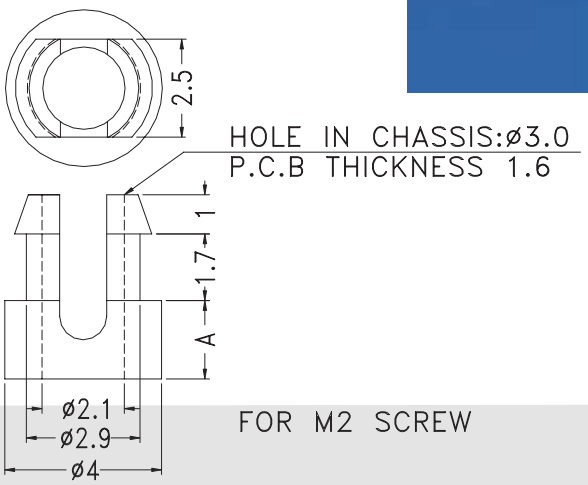

Item No.	A	Packing
BLH-02	2.0	(1000PCS)
BLH-2.5	2.5	
BLH-03	3.0	
BLH-3.5	3.5	
BLH-04	4.0	
BLH-4.5	4.5	
BLH-05	5.0	
BLH-5.5	5.5	
BLH-06	6.0	

ORDER INFORMATION

KLS8-0221 - BLH-02

- BLH-02: Hight
- KLS8-0221: PCB Support Series
- KLS8: Part Number

PCB Support Series

KLS8-0236 PCB Support Series

Material: UL approved Nylon 66, 94V-2

Unit:mm

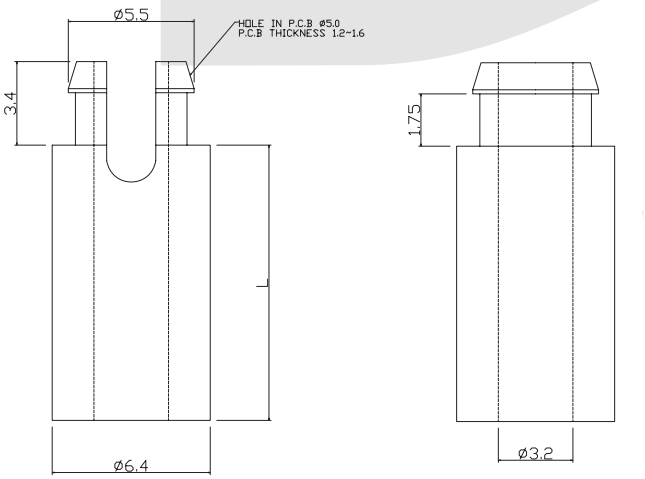



Item No.	A	Packing
PSX-03	3.2	100PCS (1000PCS)
PSX-04	4	
PSX-05	4.8	
PSX-06	6.4	
PSX-08	8	
PSX-09	9.5	
PSX-12	12.7	
PSX-14	14.2	
PSX-16	16	
PSX-25	25.4	

ORDER INFORMATION

KLS8-0236 - PSX-03

- Hight
- PCB Support Series
- Part Number

PCB Support Series

KLS8-0229 PCB Support Series

Material: UL approved Nylon 66, 94V-2
By hand to support P.C.B. Can be removed for replacement easily.

Unit:mm



KLS8-0229A

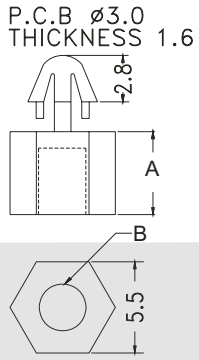

ITEM NO.	A	B	PACKING
KLS8-0229A-BUT-05	5.0	2.5	2000PCS
KLS8-0229A-BUT-06	6.0	2.5	2000PCS
KLS8-0229A-BUT-07	7.0	2.5	2000PCS
KLS8-0229A-BUT-08	8.0	2.5	2000PCS
KLS8-0229A-BUT-09	9.0	2.5	2000PCS
KLS8-0229A-BUT-10	10.0	2.5	2000PCS
KLS8-0229A-BUT-12	12.0	2.5	2000PCS

KLS8-0229B

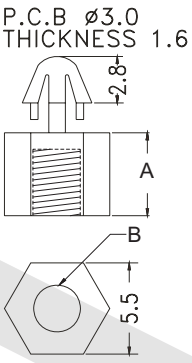

ITEM NO.	A	B	PACKING
KLS8-0229B-BUR-05	5.0	M3	2000PCS
KLS8-0229B-BUR-06	6.0	M3	2000PCS
KLS8-0229B-BUR-07	7.0	M3	2000PCS
KLS8-0229B-BUR-08	8.0	M3	2000PCS
KLS8-0229B-BUR-09	9.0	M3	2000PCS
KLS8-0229B-BUR-10	10.0	M3	2000PCS
KLS8-0229B-BUR-12	12.0	M3	2000PCS

ORDER INFORMATION

KLS8-0229A - BUT-05

- Hight
- PCB Support Series
- Part Number

PCB Support Series

KLS8-0215 PCB Support Series

Material: UL approved Nylon 66, 94V-2

Unit:mm

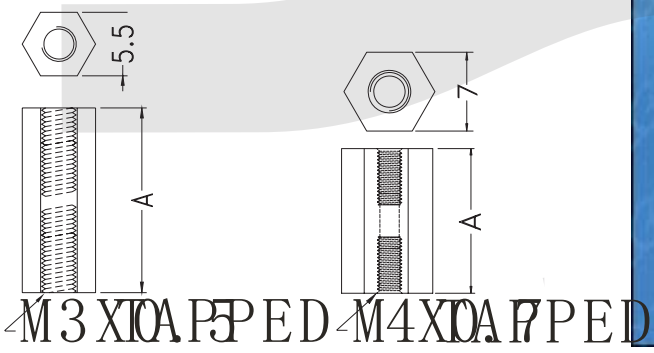



Model No.	A	Packaging
M3-04	4.0	1000PCS
M3-05	5.0	
M3-06	6.0	
M3-07	7.0	
M3-08	8.0	
M3-09	9.0	
M3-10	11.0	
M3-11	11.0	
M3-12	12.0	
M3-13	13.0	
M3-14	14.0	
M3-15	15.0	
M3-16	16.0	
M3-17	17.0	
M3-18	18.0	
M3-19	19.0	
M3-20	20.0	

Model No.	A	Packaging
M3-22	22.0	1000PCS
M3-25	25.0	
M3-27	27.0	
M3-30	30.0	
M3-32	32.0	
M3-35	35.0	
M3-38	38.0	
M3-42	42.0	
M3-45	45.0	
M3-47	47.0	
M3-49	49.0	
M3-50	50.0	

Model No.	A	Packaging
M4-06	6.0	1000PCS
M4-08	8.0	
M4-09	9.0	
M4-9.5	9.5	
M4-10	10.0	
M4-12A	12.0	
M4-12	12.7	
M4-14	14.0	
M4-15	15.0	
M4-16	16.0	
M4-17	17.0	
M4-18	18.0	
M4-19	19.0	
M4-20	20.0	
M4-22	22.0	
M4-25	25.0	
M4-30	30.0	

ORDER INFORMATION

KLS8-0215 - M3-04

- Hight
- PCB Support Series
- Part Number

PCB Support Series

KLS8-0214 PCB Support Series

Material: UL approved Nylon 66, 94V-2

Unit:mm

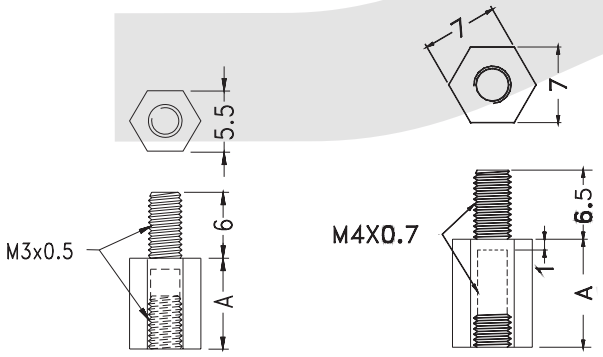



Model No.	A	Packaging
M3-04	4.0	
M3-05	5.0	
M3-06	6.0	
M3-07	7.0	
M3-08	8.0	
M3-09	9.0	
M3-10	11.0	
M3-11	11.0	
M3-12	12.0	1000PCS
M3-13	13.0	
M3-14	14.0	
M3-15	15.0	
M3-16	16.0	
M3-17	17.0	
M3-18	18.0	
M3-19	19.0	
M3-20	20.0	

Model No.	A	Packaging
M3-22	22.0	
M3-25	25.0	
M3-27	27.0	
M3-30	30.0	
M3-32	32.0	
M3-35	35.0	1000PCS
M3-38	38.0	
M3-42	42.0	
M3-45	45.0	
M3-47	47.0	
M3-49	49.0	
M3-50	50.0	

Model No.	A	Packaging
M4-06	6.0	
M4-08	8.0	
M4-09	9.0	
M4-9.5	9.5	
M4-10	10.0	
M4-12A	12.0	
M4-12	12.7	
M4-14	14.0	
M4-15	15.0	1000PCS
M4-16	16.0	
M4-17	17.0	
M4-18	18.0	
M4-19	19.0	
M4-20	20.0	
M4-22	22.0	
M4-25	25.0	
M4-30	30.0	

ORDER INFORMATION

KLS8-0214 - M3-04

- Hight
- PCB Support Series
- Part Number

PCB Support Series

KLS8-0110 PCB Support Series

Material: UL approved Nylon 66, 94V-2

Unit:mm

Part No.	A	B
KLS8-0110-LED-1.5	4.0	2.8
KLS8-0111-LED-1.5	4.5	3.0
KLS8-0112-LED-1.5	5.0	3.5
KLS8-0113A-LED-1.5	6.3	3.2
KLS8-0113B-LED-1.5	6.3	4.0
KLS8-0114-LED-1.5	7.0	3.2
KLS8-0115-LED-1.5	7.0	4.2



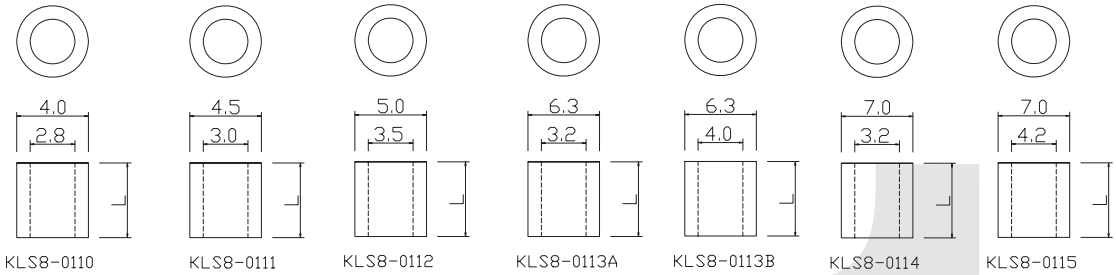

Model No.	L	Packaging
LED-1.5	1.5	2000
LED-2	2.0	
LED-2.5	2.5	
LED-3	3.0	
LED-3.5	3.5	
LED-4	4.0	
LED-4.5	4.5	
LED-5	5.0	
LED-5.5	5.5	
LED-6	6.0	
LED-6.5	6.5	
LED-6.8	6.8	
LED-7	7.0	
LED-7.5	7.5	
LED-8	8.0	
LED-8.5	8.5	
LED-8.8	8.8	
LED-9	9.0	

Model No.	L	Packaging
LED-9.5	9.5	2000
LED-10	10.0	
LED-10.5	10.5	
LED-11	11.0	
LED-11.5	11.5	
LED-12	12.0	
LED-12.5	12.5	
LED-13	13.0	
LED-13.5	13.5	
LED-14	14.0	1000
LED-14.5	14.5	
LED-15	15.0	
LED-15.5	15.5	
LED-16	16.0	
LED-16.5	16.5	
LED-17	17.0	
LED-17.5	17.5	
LED-18	18.0	

Model No.	L	Packaging
LED-18.5	18.5	1000
LED-19	19.0	
LED-19.5	19.5	
LED-20	20.0	
LED-20.5	20.5	
LED-21	21.0	
LED-21.5	21.5	
LED-22	22.0	
LED-22.5	22.5	
LED-23	23.0	
LED-23.5	23.5	
LED-24	24.0	
LED-29.5	29.5	
LED-30	30.0	
LED-24.5	24.5	
LED-25	25.0	
LED-25.5	25.5	
LED-26	26.0	

ORDER INFORMATION

KLS8-0110 - LED-1.5

- Hight
- PCB Support Series
- Part Number

PCB Support Series

KLS8-DBK Series

Specification parameters

Materials: Brass
Plating: according to customer requirements
Size:
D: M2.5; M3; M4; 4#40; 6#32
E: 5; 6
H:5.5; 7
L:According to customer requirements
B:According to customer requirements
C:According to customer requirements



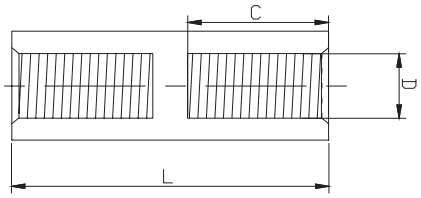

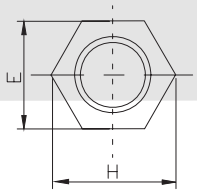

TYPE	D	E	H	L
KLS1-DBK-M2. 5	M2. 5	5-0. 2	5. 5-0. 2	
KSL1-DBK-M3	M3. 0	5-0. 2	5. 5-0. 2	
KLS1-DBK-M4	M4. 0	6-0. 2	7-0. 2	
KLS1-DBK-4#40	4#40	5-0.2	5. 5-0. 2	
KLS1-DBK-6#32	6#32	6-0. 2	7-0. 2	

ORDER INFORMATION

Product NO.: KLS8-DBK-M3-E5.0-L10

Pos. No.
Series No.
See drawings

PCB Support Series

KLS8-DBL Series

Specification parameters

Materials: Brass
Plating: according to customer requirements
Size:
D: M2.5; M3; M4; 4#40; 6#32
E: 5; 6
H:5.5; 7
L:According to customer requirements
B:According to customer requirements
C:According to customer requirements



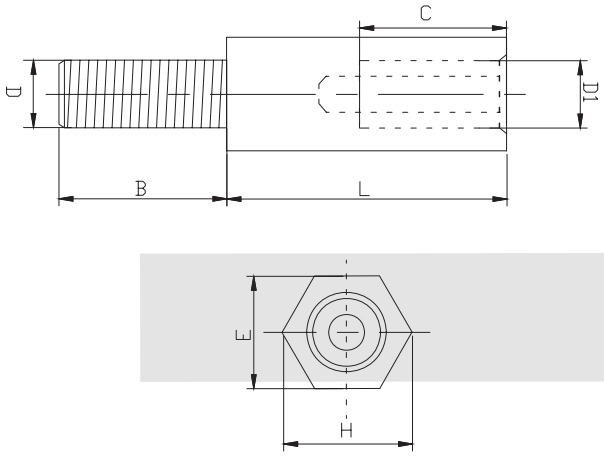

TYPE	D	E	H	L
KLS1-DBL-M2. 5	M2. 5	5-0. 2	5. 5-0. 2	
KSL1-DBL-M3	M3. 0	5-0. 2	5. 5-0. 2	
KLS1-DBL-M4	M4. 0	6-0. 2	7-0. 2	
KLS1-DBL-4#40	4#40	5-0.2	5. 5-0. 2	
KLS1-DBL-6#32	6#32	6-0. 2	7-0. 2	

ORDER INFORMATION

Product NO.: KLS8-DBL-M3-E5.0-L10

Pos. No.
Series No.
See drawings

PCB Support*PCB Spacers Series

KLS8-PCSN



Brass PCB Support , M3 , Dia. 5.5mm



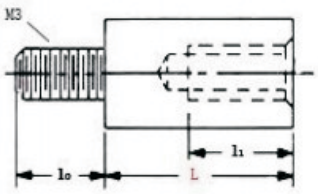

Russia P/N:	KLS P/N	Screw	Dia	D	L0	L1	L
PCSN-6 (5mm)	KLS8-PCSN-6	M3	5.5	5.5	6	6	6
PCSN-10 (5mm)	KLS8-PCSN-10	M3	5.5	5.5	6	6	10
PCSN-15 (5mm)	KLS8-PCSN-15	M3	5.5	5.5	6	6	15
PCSN-20 (5mm)	KLS8-PCSN-20	M3	5.5	5.5	6	6	20
PCSN-25 (5mm)	KLS8-PCSN-25	M3	5.5	5.5	6	6	25
PCSN-30 (5mm)	KLS8-PCSN-30	M3	5.5	5.5	6	6	30

Order Information

Product No.: KLS8-PCSN

Part No.
Series No.

PCB Support*PCB Spacers Series

KLS8-PCSS



Brass PCB Spport , M3 Screw , Dia. 5.5mm

KLS P/N	Material	Screw	D/mm	L1/mm	L/mm
KLS8-PCSS-6	Copper	M3	5.5	6.0	6.0
KLS8-PCSS-10	Copper	M3	5.5	6.0	10
KLS8-PCSS-15	Copper	M3	5.5	6.0	15
KLS8-PCSS-20	Copper	M3	5.5	6.0	20
KLS8-PCSS-25	Copper	M3	5.5	6.0	25
KLS8-PCSS-30	Copper	M3	5.5	6.0	30

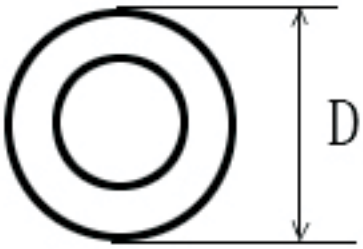

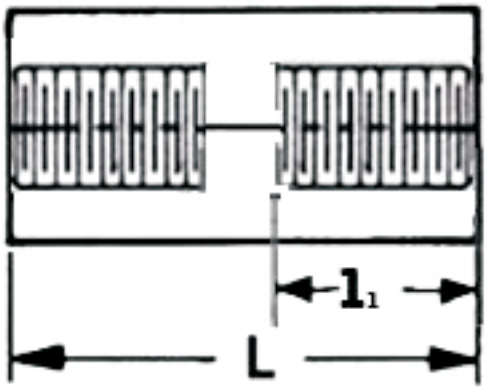

Order Information

Product No.: KLS8-PCSS

Part No.
Series No.

Led Spacer Support Series

KLS8-0101 Led Spacer Support Series

Material: UL approved Nylon 66, 94V-2
Unit:mm

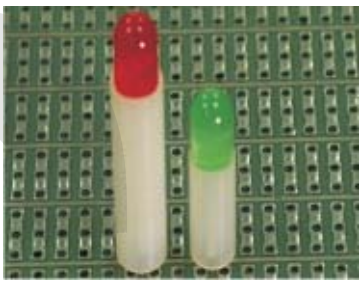

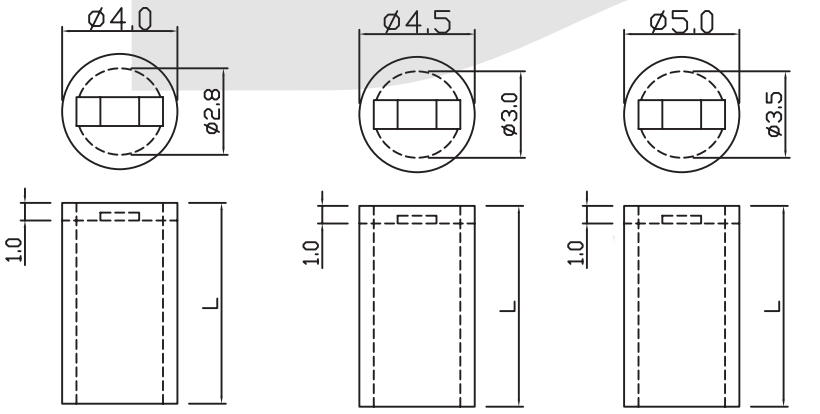

KLS8-0101 KLS8-0102 KLS8-0103

Model No.	L	Packaging
LED-1.5	1.5	2000
LED-2	2	
LED-2.5	2.5	
LED-3	3	
LED-3.5	3.5	
LED-4	4	
LED-4.5	4.5	
LED-5	5	
LED-5.5	5.5	
LED-6	6	
LED-6.5	6.5	
LED-6.8	6.8	
LED-7	7	
LED-7.5	7.5	
LED-8	8	
LED-8.5	8.5	
LED-8.8	8.8	
LED-9	9	
LED-9.5	9.5	
LED-10	10	

Model No.	L	Packaging
LED-10.5	10.5	2000
LED-11	11	
LED-11.5	11.5	
LED-12	12	
LED-12.5	12.5	
LED-13	13	
LED-13.5	13.5	
LED-14	14	1000
LED-14.5	14.5	
LED-15	15	
LED-15.5	15.5	
LED-16	16	
LED-16.5	16.5	
LED-17	17	
LED-17.5	17.5	
LED-18	18	
LED-18.5	18.5	
LED-19	19	
LED-19.5	19.5	
LED-20	20	

Model No.	L	Packaging
LED-20.5	20.5	1000
LED-21	21	
LED-21.5	21.5	
LED-22	22	
LED-22.5	22.5	
LED-23	23	
LED-23.5	23.5	
LED-24	24	
LED-24.5	24.5	
LED-25	25	
LED-25.5	25.5	
LED-26	26	
LED-26.5	26.5	
LED-27	27	
LED-27.5	27.5	
LED-28	28	
LED-28.5	28.5	
LED-29	29	
LED-29.5	29.5	
LED-30	30	

ORDER INFORMATION

KLS8-0101-LED-1.5

- Hight
- OD: 0101=4.0mm 0102=4.5mm 0103=5.0mm
- Part Number

Led Spacer Support Series

KLS8-0125 Led Spacer Support Series

Material: UL approved Nylon 66, 94V-2
Unit:mm



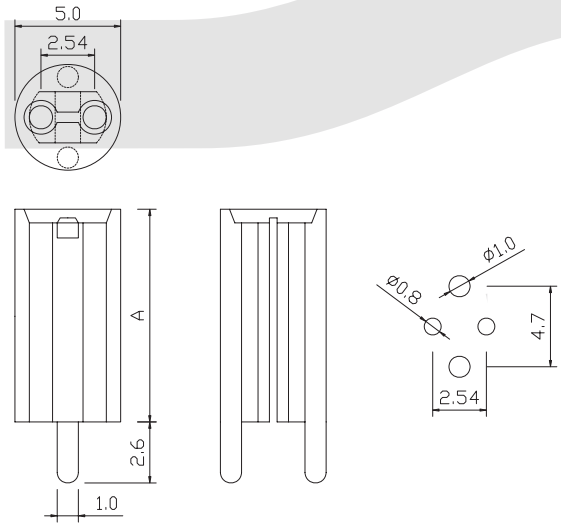

Model No.	A	Packaging
LED-3	3	2000pcs
LED-4	4	
LED-5	5	
LED-6	6	
LED-7	7	
LED-8	8	
LED-9	9	
LED-10	10	
LED-11	11	
LED-12	12	
LED-13	13	
LED-14	14	
LED-15	15	
LED-16	16	

Model No.	A	Packaging
LED-17	17	2000
LED-18	18	
LED-19	19	
LED-20	20	
LED-21	21	
LED-22	22	
LED-23	23	
LED-24	24	
LED-25	25	
LED-26	26	
LED-27	27	
LED-28	28	1000pcs
LED-29	29	
LED-30	30	

ORDER INFORMATION

KLS8-0125-LED-3. 0

- Hight
- OD: 0125=5. 0mm
- Part Number

Led Spacer Support Series

KLS8-0106 Led Spacer Support Series

Material: UL approved Nylon 66, 94V-2
Unit:mm



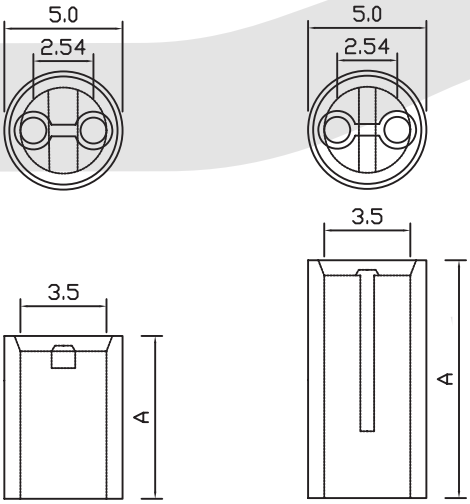

KLS8-0105 KLS8-0106

Model No.	A	Packaging
LED-1.5	1.5	2000
LED-2	2	
LED-2.5	2.5	
LED-3	3	
LED-3.5	3.5	
LED-4	4	
LED-4.5	4.5	
LED-5	5	
LED-5.5	5.5	
LED-6	6	
LED-6.5	6.5	
LED-6.8	6.8	
LED-7	7	
LED-7.5	7.5	
LED-8	8	
LED-8.5	8.5	
LED-8.8	8.8	
LED-9	9	
LED-9.5	9.5	
LED-10	10	

Model No.	A	Packaging
LED-10.5	10.5	2000
LED-11	11	
LED-11.5	11.5	
LED-12	12	
LED-12.5	12.5	
LED-13	13	
LED-13.5	13.5	
LED-14	14	1000
LED-14.5	14.5	
LED-15	15	
LED-15.5	15.5	
LED-16	16	
LED-16.5	16.5	
LED-17	17	
LED-17.5	17.5	
LED-18	18	
LED-18.5	18.5	
LED-19	19	
LED-19.5	19.5	
LED-20	20	

Model No.	A	Packaging
LED-20.5	20.5	1000
LED-21	21	
LED-21.5	21.5	
LED-22	22	
LED-22.5	22.5	
LED-23	23	
LED-23.5	23.5	
LED-24	24	
LED-24.5	24.5	
LED-25	25	
LED-25.5	25.5	
LED-26	26	
LED-26.5	26.5	
LED-27	27	
LED-27.5	27.5	
LED-28	28	
LED-28.5	28.5	
LED-29	29	
LED-29.5	29.5	
LED-30	30	

ORDER INFORMATION

KLS8-0105-LED-1.5

- Hight
- OD: 0105=5.0mm 0106=5.0mm
- Part Number

Led Spacer Support Series

KLS8-0108 Led Spacer Support Series

Material: UL approved Nylon 66, 94V-2
Unit:mm

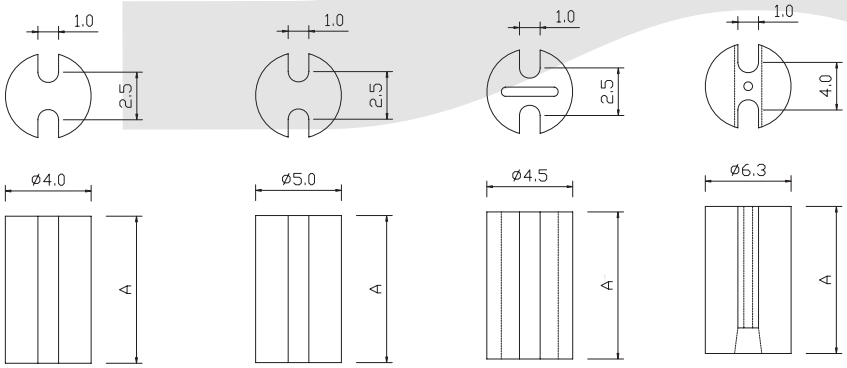

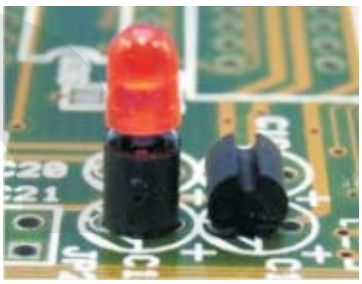

KLS8-0107 KLS8-0108 KLS8-0109 KLS8-0126

Model No.	A	Packaging
LED-1.5	1.5	2000
LED-2	2	
LED-2.5	2.5	
LED-3	3	
LED-3.5	3.5	
LED-4	4	
LED-4.5	4.5	
LED-5	5	
LED-5.5	5.5	
LED-6	6	
LED-6.5	6.5	
LED-6.8	6.8	
LED-7	7	
LED-7.5	7.5	
LED-8	8	
LED-8.5	8.5	
LED-8.8	8.8	
LED-9	9	
LED-9.5	9.5	
LED-10	10	

Model No.	A	Packaging
LED-10.5	10.5	2000
LED-11	11	
LED-11.5	11.5	
LED-12	12	
LED-12.5	12.5	
LED-13	13	
LED-13.5	13.5	
LED-14	14	1000
LED-14.5	14.5	
LED-15	15	
LED-15.5	15.5	
LED-16	16	
LED-16.5	16.5	
LED-17	17	
LED-17.5	17.5	
LED-18	18	
LED-18.5	18.5	
LED-19	19	
LED-19.5	19.5	
LED-20	20	

Model No.	A	Packaging
LED-20.5	20.5	1000
LED-21	21	
LED-21.5	21.5	
LED-22	22	
LED-22.5	22.5	
LED-23	23	
LED-23.5	23.5	
LED-24	24	
LED-24.5	24.5	
LED-25	25	
LED-25.5	25.5	
LED-26	26	
LED-26.5	26.5	
LED-27	27	
LED-27.5	27.5	
LED-28	28	
LED-28.5	28.5	
LED-29	29	
LED-29.5	29.5	
LED-30	30	

ORDER INFORMATION

KLS8-0108-LED-1.5

- Hight
- OD: 0107=4.0mm 0108=5.0mm 0109=4.5mm 0126=6.3mm
- Part Number

Led Spacer Support Series

KLS8-0110 Led Spacer Support Series

Material: UL approved Nylon 66, 94V-2
Unit:mm

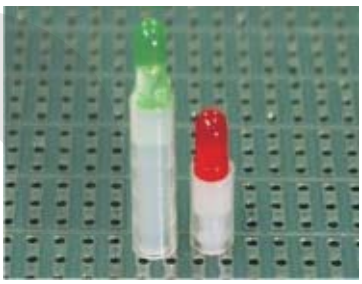

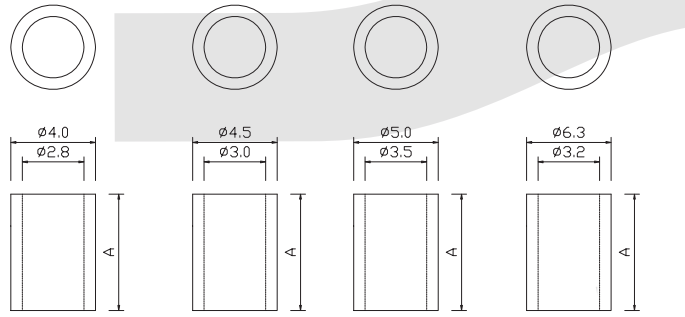

KLS8-0110 KLS8-0111 KLS8-0112 KLS8-0113A

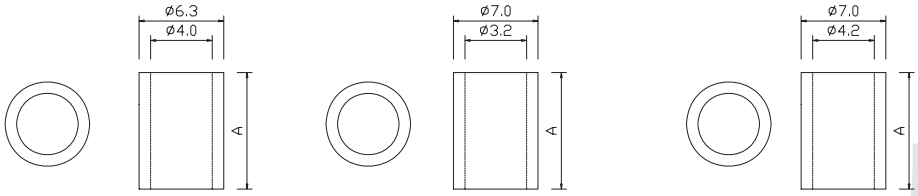

KLS8-0113B KLS8-0114 KLS8-0115

Model No.	A	Packaging
LED-1.5	1.5	2000
LED-2	2	
LED-2.5	2.5	
LED-3	3	
LED-3.5	3.5	
LED-4	4	
LED-4.5	4.5	
LED-5	5	
LED-5.5	5.5	
LED-6	6	
LED-6.5	6.5	
LED-6.8	6.8	
LED-7	7	
LED-7.5	7.5	
LED-8	8	
LED-8.5	8.5	
LED-8.8	8.8	
LED-9	9	
LED-9.5	9.5	
LED-10	10	

Model No.	A	Packaging
LED-10.5	10.5	2000
LED-11	11	
LED-11.5	11.5	
LED-12	12	
LED-12.5	12.5	
LED-13	13	
LED-13.5	13.5	
LED-14	14	1000
LED-14.5	14.5	
LED-15	15	
LED-15.5	15.5	
LED-16	16	
LED-16.5	16.5	
LED-17	17	
LED-17.5	17.5	
LED-18	18	
LED-18.5	18.5	
LED-19	19	
LED-19.5	19.5	
LED-20	20	

Model No.	A	Packaging
LED-20.5	20.5	1000
LED-21	21	
LED-21.5	21.5	
LED-22	22	
LED-22.5	22.5	
LED-23	23	
LED-23.5	23.5	
LED-24	24	
LED-24.5	24.5	
LED-25	25	
LED-25.5	25.5	
LED-26	26	
LED-26.5	26.5	
LED-27	27	
LED-27.5	27.5	
LED-28	28	
LED-28.5	28.5	
LED-29	29	
LED-29.5	29.5	
LED-30	30	

ORDER INFORMATION

KLS8-0110-LED-1.5

- Hight
- OD: 0110=4.0mm 0111=4.5mm 0112=5.0mm 0113A=6.3mm 0113B=6.3mm 0114=7.0mm 0115=7.0mm
- Part Number

Led Spacer Support Series

KLS8-0133 Led Spacer Support Series

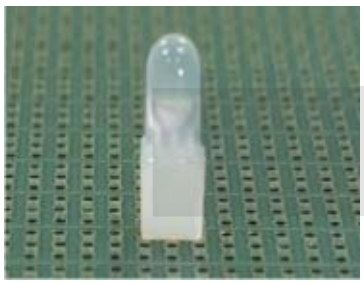

Material: UL approved Nylon 66, 94V-2
Unit:mm

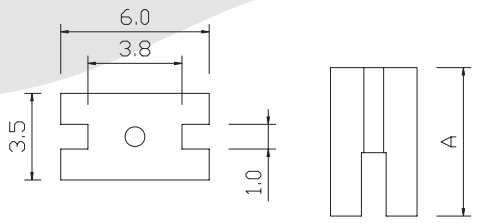

Model No.	A	Packaging
LED-4.5	4.5	1000PCS
LED-06	6	
LED-07	7	
LED-08	8	
LED-09	9	
LED-10	10	
LED-11	11	
LED-12	12	
LED-13	13	
LED-14	14	
LED-15	15	
LED-16	16	
LED-17.5	17.5	
LED-22.5	22.5	

ORDER INFORMATION

KLS8-0133-LED-4.5
- Hight
- OD: 0133=6.0x3.5mm
- Part Number

Led Spacer Support Series

KLS8-0127 Led Spacer Support Series

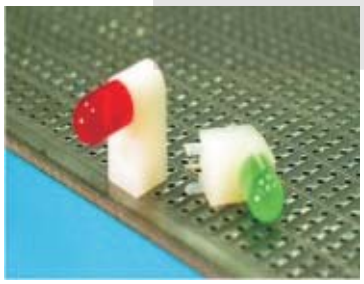

Material: UL approved Nylon 66, 94V-2
Unit:mm

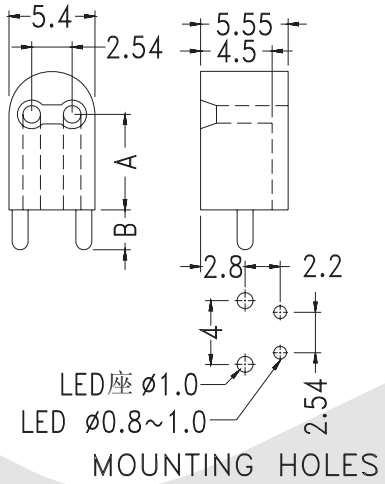

Model No.	A	B	Packaging
LED-03	3	2.6	1000PCS
LED-4.5	4.5	2.6	
LED-6.0	6	2.6	
LED-7.0	7	2.6	
LED-8.0	8	2.6	
LED-9.0	9	2.6	
LED-10.0	10	2.6	

ORDER INFORMATION

KLS8-0127-LED-03
- Hight
- 90° LED Spacer Support Series
- Part Number

Led Spacer Support Series

KLS8-0128 Led Spacer Support Series



Material: UL approved Nylon 66, 94V-2
No tools are required
Unit:mm

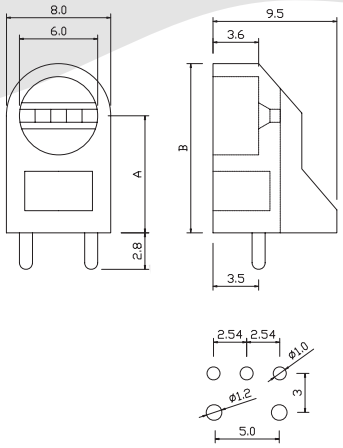

Model No.	A	B	Packaging
LED-05	5	8. 75	1000PCS
LED-06	6	9. 75	
LED-07	7	10. 75	
LED-08	8	11. 75	
LED-09	9	12. 75	
LED-10	10	13. 75	
LED-11	11	14. 75	
LED-11. 5	11. 5	15	
LED-12	12	15. 75	
LED-14	14	17. 75	
LED-15	15	18. 75	
LED-16	16	19. 75	
LED-17	17	20. 75	
LED-18	18	21. 75	
LED-19	19	22. 75	
LED-20	20	23. 75	

ORDER INFORMATION

KLS8-0128-LED-5. 0

- Hight
- 90° LED Spacer Support Series
- Part Number

Led Spacer Support Series

KLS8-0135 Led Spacer Support Series

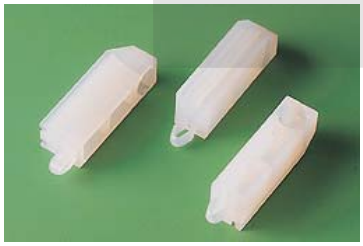

Material: UL approved Nylon 66, 94V-2
Unit:mm

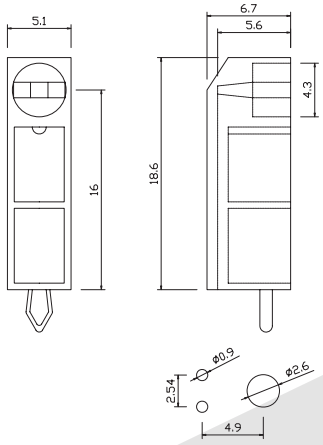

ORDER INFORMATION

KLS8-0135-PLM-18. 6

- Hight
- 90° LED Spacer Support Series
- Part Number

Led Spacer Support Series

KLS8-0136 Led Spacer Support Series

Material: UL approved Nylon 66, 94V-2
No tools are required
Unit:mm

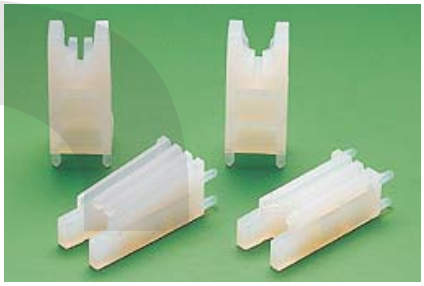

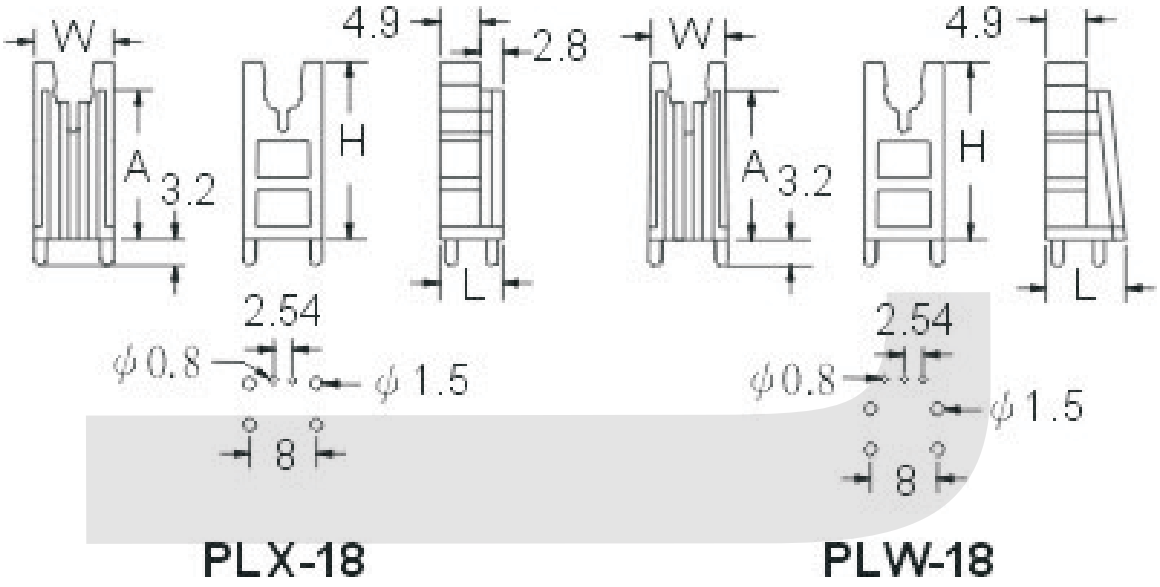

PLX-18 PLW-18

Model No.	A	L	W	H
PLX-18	18.2	7.7	9.6	21.6
PLW-18	18.2	9.5	9.6	21.6

ORDER INFORMATION

KLS8-0136-PLX-18.0

- Hight
- 90° LED Spacer Support Series
- Part Number

Led Spacer Support Series

KLS8-0122 Led Spacer Support Series



Material: UL approved Nylon 66, 94V-2
Unit:mm

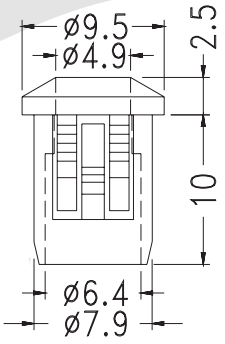

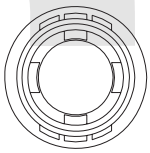

CHASSIS ø8

ORDER INFORMATION

KLS8-0122-LED5-10

- Hight
- 5mm LED Holder
- Part Number

Led Spacer Support Series

KLS8-0124 Lens CAP Series



Material: UL approved PC, 94V-2
Unit:mm

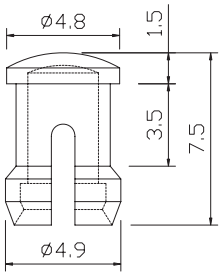

LC3-1

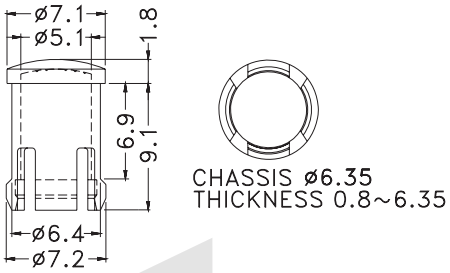

CHASSIS ø6.35
THICKNESS 0.8~6.35

LC5-1

Part No.	LED	Package
LC3-1	Φ3	1000PCS
LC5-1	Φ5	1000PCS

ORDER INFORMATION

KLS8-0124-LC3-1

- LED OD
- Lens CAP Series
- Part Number

Led Spacer Support Series

KLS8-0117 Led Holder Series

Material: UL approved Nylon 66, 94V-2
Unit:mm



KLS8-0117-3

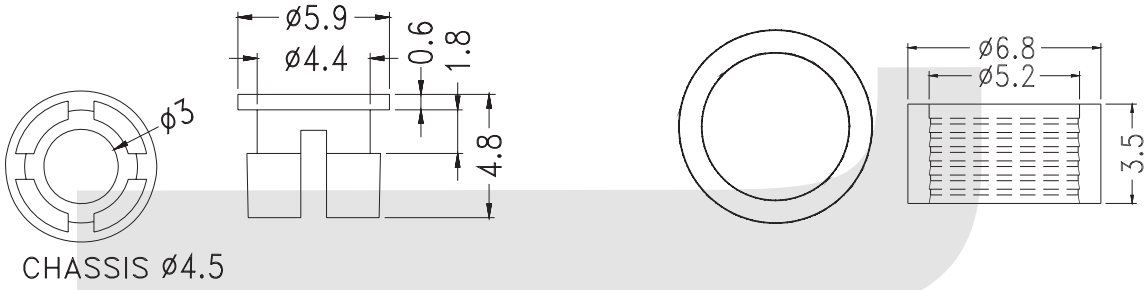

KLS8-0117-5

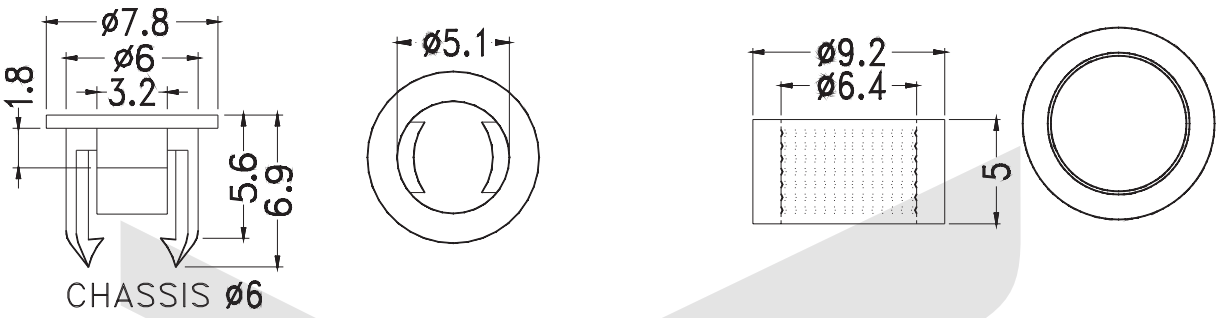

ORDER INFORMATION

KLS8-0117- 3

- LED OD
- LED Holder Series
- Part Number

Led Spacer Support Series

KLS8-0118 Led Holder Series

Material: UL approved Nylon 66, 94V-2
Unit:mm



KLS8-0118-3

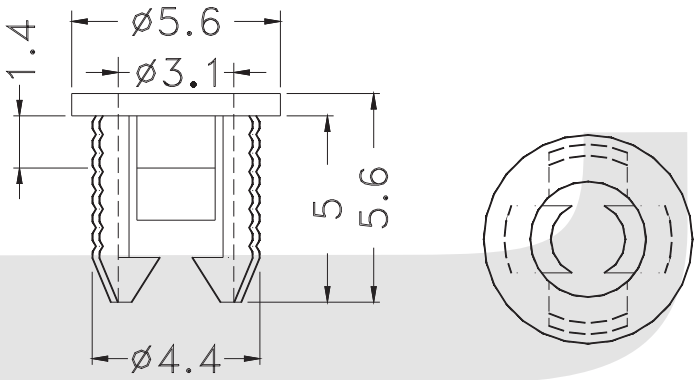

CHASSIS ø4.5

KLS8-0118-5

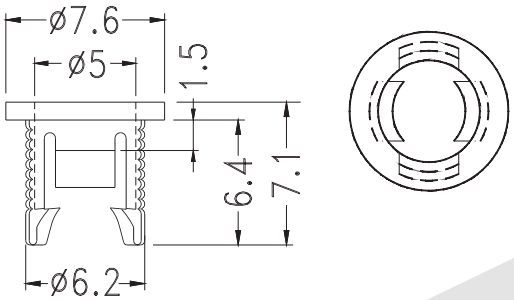

CHASSIS ø6.4

ORDER INFORMATION

KLS8-0118- 3

- LED OD
- LED Holder Series
- Part Number

Led Spacer Support Series

KLS8-0121 Led Spacer Support Series

Material: UL approved Nylon 66, 94V-2
Unit:mm



KLS8-0119-LED-3

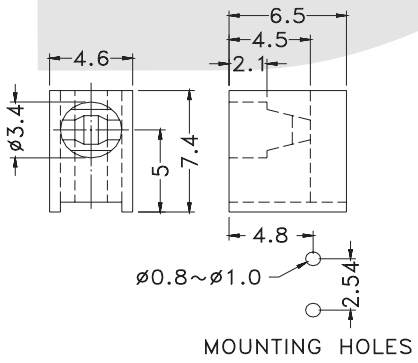

KLS8-0120-LED-3

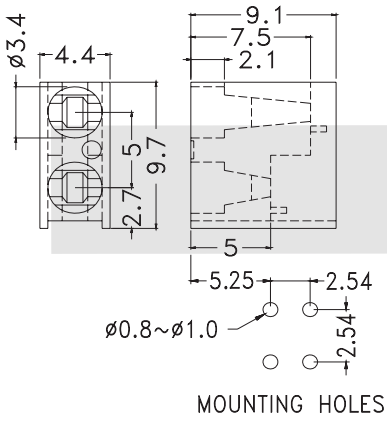

KLS8-0121-LED-3

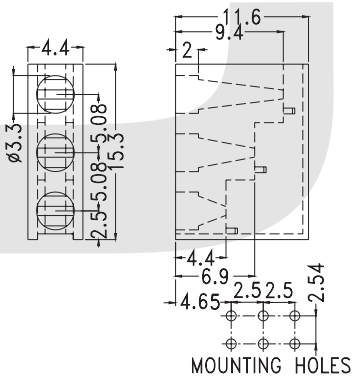

KLS8-0134-LED-3

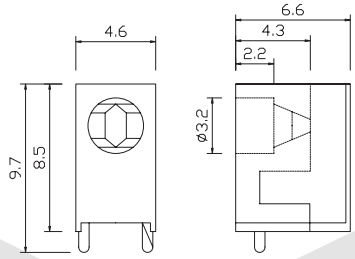

ORDER INFORMATION

KLS8-0119-LED-3

- LED OD
- Led Spacer Support Series
- Part Number

Led Spacer Support Series

KLS8-0129 Led Spacer Support Series

Material: UL approved Nylon 66, 94V-2
Unit:mm

KLS8-0129-LED-5



KLS8-0130-LED-5

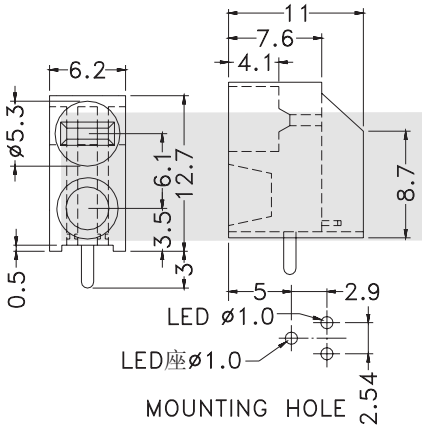

KLS8-0131-LED-5

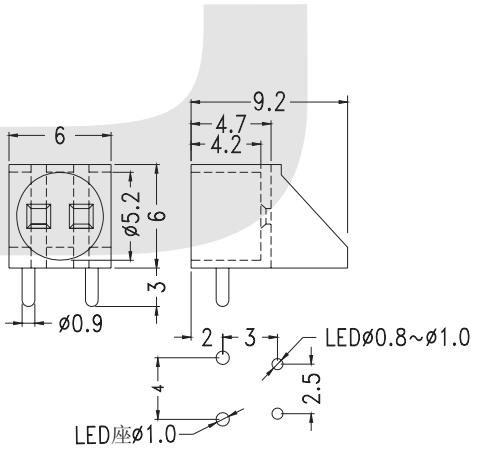

KLS8-0132-LED-5

ORDER INFORMATION

KLS8-0129-LED-5

- LED OD
- Led Spacer Support Series
- Part Number

Heat Shrinkable Tube Series

KLS8-01140 Heat Shrinkable Tube Series

Property	Value
Shrink Temperature	90°C
Temperature Renge	-55°C~125°C
Radial Shrinking Ratio	≥ 50%
Longitudinal Shrinking Ratio	≤ 5%
Tensile Strength	≥ 14Mpa
Aging	7Days Air Cren at 158.0 ± 1.0 °C
	60Days Air Cren at 134.0 ± 1.0 °C
Tensile Stength after Aging	≥ 10Mpa
Elongation after Aging	≥ 200%
Volume Resistivity	≥ 10Ω · cm
Dielectric Strength	≥ 25KV/mm
Flammability	VW-1



Material: POLYOLEFIN
Other sizes available upon special request
Standard color : BLACK
Available in White, Red, Blue, Yellow, Green, Brown, Grey, Orange, Purple

Item No.	As supplied (mm)		After shrinkage(mm)		Spool
	Inside diameter(mm)	Wall thickness	Inside diameter MXA(mm)	Wall thickness	
HT-1.0	1.0	0.2±0.05	0.5	0.4±0.05	400M
HT-1.5	1.5	0.2±0.05	0.8	0.4±0.05	300M
HT-2.0	2.0	0.25±0.05	1.0	0.45±0.1	200M
HT-2.5	2.5	0.25±0.05	1.3	0.45±0.1	
HT-3.0	3.0	0.25±0.05	1.5	0.45±0.1	100M
HT-3.5	3.5	0.25±0.05	1.8	0.45± 0.1	
HT-4.0	4.0	0.25±0.05	2.0	0.45± 0.1	
HT-5.0	5.0	0.35±0.05	2.5	0.55± 0.1	
HT-6.0	6.0	0.35±0.05	3.0	0.55± 0.1	
HT-7.0	7.0	0.35±0.05	3.5	0.55± 0.1	
HT-8.0	8.0	0.35±0.05	4.0	0.55± 0.1	
HT-9.0	9.0	0.35±0.05	4.5	0.55± 0.1	
HT-10	10.0	0.35±0.05	5.0	0.6± 0.1	
HT-11	11.0	0.35±0.05	5.5	0.6± 0.1	
HT-12	12.0	0.35±0.1	6.0	0.7± 0.1	
HT-13	13.0	0.35±0.1	6.5	0.7± 0.1	
HT-14	14.0	0.35±0.1	7.0	0.7± 0.1	
HT-15	15.0	0.35±0.1	7.5	0.7± 0.1	
HT-16	16.0	0.35±0.1	8.0	0.7± 0.1	50M
HT-17	17.0	0.35±0.1	8.5	0.7± 0.1	
HT-18	18.0	0.4± 0.1	9.0	0.8± 0.1	
HT-20	20.0	0.5±0.1	10.0	0.9± 0.1	
HT-22	22.0	0.5±0.1	11.0	0.9± 0.1	
HT-25	25.0	0.5±0.1	12.5	0.9± 0.1	
HT-28	28.0	0.5±0.1	14.0	0.9± 0.1	20M
HT-30	30.0	0.5±0.1	15.0	1.0± 0.2	
HT-35	35.0	0.5±0.1	17.5	1.0± 0.2	
HT-40	40.0	0.5±0.1	20.0	1.0± 0.2	
HT-50	50.0	0.5±0.1	25.0	1.0± 0.2	
HT-60	60.0	0.6±0.1	30.0	1.2± 0.2	
HT-70	70.0	0.6±0.1	35.0	1.2± 0.2	
HT-80	80.0	0.6±0.1	40.0	1.2± 0.2	
HT-90	90.0	0.6±0.1	45.0	1.2± 0.2	
HT-100	100.0	0.7±0.1	50.0	1.3±0.2	

ORDER INFORMATION

KLS8-01140-HT-1. 0

- Item NO.
- Heat Shrinkable Tube Series
- Part Number

KLS

3-Buttons,Switches-Компоненты коммутации: выключатели, переключатели, кнопки

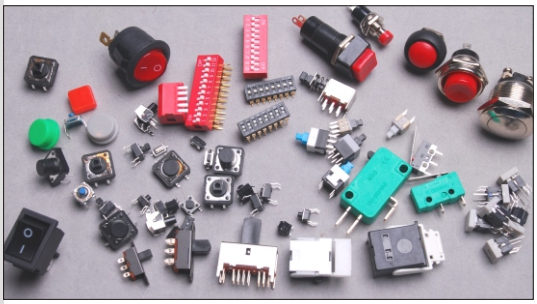

3-1	DIP switch
3-2	Tactile switch
3-3	Hook switch
3-4	Magnetic reed switches
3-5	Snap Action switches/Micro switches
3-6	Navigation joystick switches
3-7	Pushbutton switches
3-8	Rocker switches
3-9	Rotary switches
3-10	Slide switches

More . . .

KLS

3-Buttons,Switches-Компоненты коммутации: выключатели, переключатели, кнопки

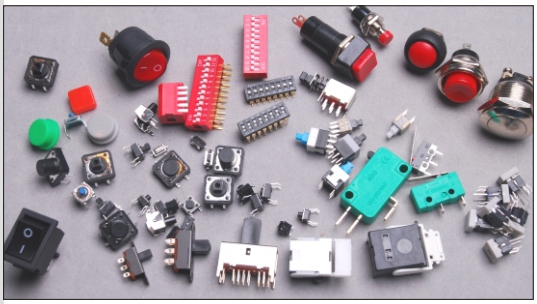

3-1	**DIP switch**
3-2	Tactile switch
3-3	Hook switch
3-4	Magnetic reed switches
3-5	Snap Action switches/Micro switches
3-6	Navigation joystick switches
3-7	Pushbutton switches
3-8	Rocker switches
3-9	Rotary switches
3-10	Slide switches

More . . .

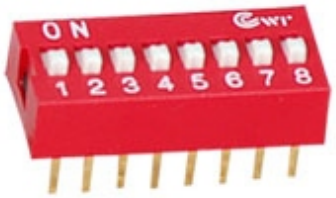

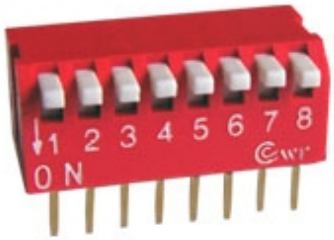









KLS ELECTRONIC CO; LTD. WWW.CNKLS.COM Email:sales@cnkls.com
Tel:0086 574 86824882 Fax:0086 574 86824882

DIP Switch Series

KLS7-DS-Side Type Dip Switch Series

SPECIFICATIONS

Mechanical life: 2000 operations per switch
Operation Force : ≤9.8N max.
Stroke:2.0mm
Operation Temp:-20°C~+70°C
Electrical life: 2000 operations per switch-24 VDC, 25mA
Contact Resistance: 50m max. at initial
Non-Switching Rating: 100mA, 50VDC
Switching Rating: 25mA, 24VDC
Circuit: Single pole single throw

Soldering and Cleaning Processes
Keep all switch contacts in their "OFF" position for all operations



Model No.	No. Pos.	A
DS-01	1	4.10
DS-02	2	6.64
DS-03	3	9.18
DS-04	4	11.72
DS-05	5	14.26
DS-06	6	16.80
DS-07	7	19.34
DS-08	8	21.88
DS-09	9	24.42
DS-10	10	26.96
DS-12	12	32.04

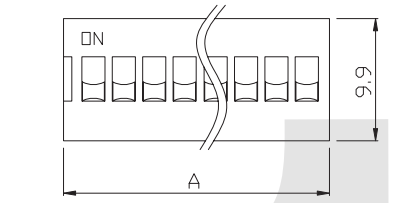

DSR Type

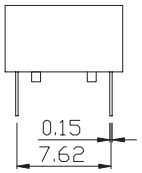

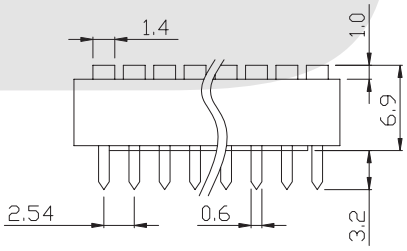

DS Type

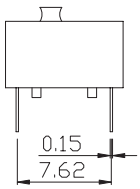

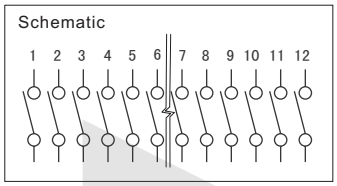

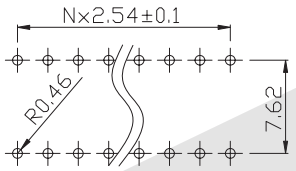

PCB LAYOUT

ORDER INFORMATION

KLS7-DS - XX - R - 0 0

Part Number
DS :Bulge Type Dip Switch
DSR:Recessed Type Dip Switch
Number of Pos.: 01~12 Pos.

Color: R=Red B=Blue
0:Non-sealed
1:With sealed
Packaging: 0=Tube 1=Tape

DIP Switch Series

KLS7-DP-Piano Type Dip Switch Series

SPECIFICATIONS

Mechanical life: 2000 operations per switch
Operation Force : ≤9.8N max.
Stroke:2.0mm
Operation Temp:-20°C~+70°C
Electrical life: 2000 operations per switch-24 VDC, 25mA
Contact Resistance: 50m max. at initial
Non-Switching Rating: 100mA, 50VDC
Switching Rating: 25mA, 24VDC
Circuit: Single pole single throw

Soldering and Cleaning Processes
Keep all switch contacts in their "OFF" position for all operations

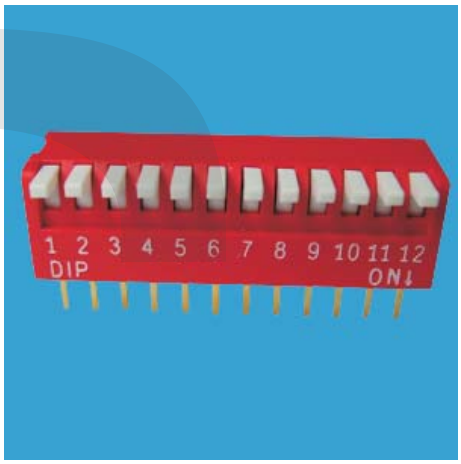

Model No.	No. Pos.	A
DP-01	1	4.10
DP-02	2	6.64
DP-03	3	9.18
DP-04	4	11.72
DP-05	5	14.26
DP-06	6	16.80
DP-07	7	19.34
DP-08	8	21.88
DP-09	9	24.42
DP-10	10	26.96
DP-12	12	32.04

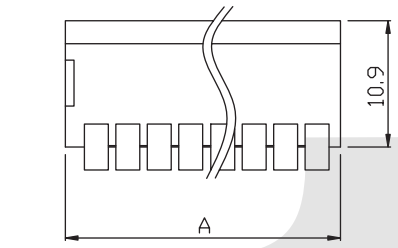

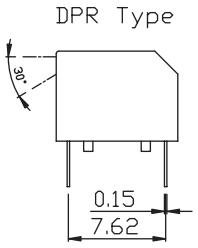

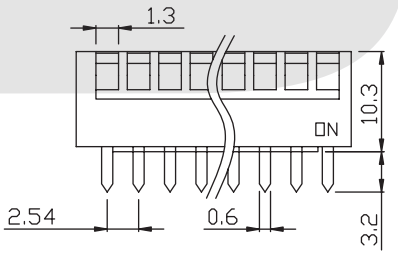

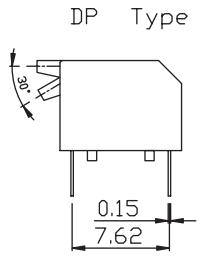

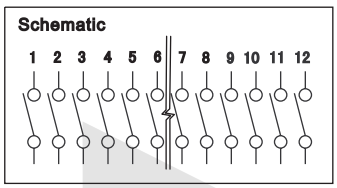

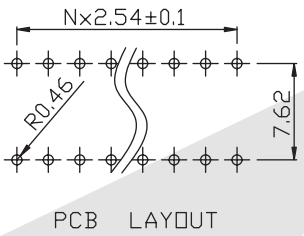

ORDER INFORMATION

KLS7-DP - XX - R - 0 0

Part Number
DP :Bulge Type Dip Switch
DPR:Recessed Type Dip Switch
Number of Pos.: 01~12 Pos.

Color: R=Red B=Blue
0:Non-sealed
1:With sealed
Packaging: 0=Tube 1=Tape

DIP Switch Series

KLS7-DA-Right Angle Type Dip Switch Series

SPECIFICATIONS

Mechanical life: 2000 operations per switch
Operation Force : ≤9.8N max.
Stroke:2.0mm
Operation Temp:-20°C~+70°C
Electrical life: 2000 operations per switch-24 VDC, 25mA
Contact Resistance: 50m max. at initial
Non-Switching Rating: 100mA, 50VDC
Switching Rating: 25mA, 24VDC
Circuit: Single pole single throw

Soldering and Cleaning Processes
Keep all switch contacts in their "OFF" position for all operations



Model No.	No. Pos.	A
DA-01	1	4.10
DA-02	2	6.64
DA-03	3	9.18
DA-04	4	11.72
DA-05	5	14.26
DA-06	6	16.80
DA-07	7	19.34
DA-08	8	21.88
DA-09	9	24.42
DA-10	10	26.96
DA-12	12	32.04

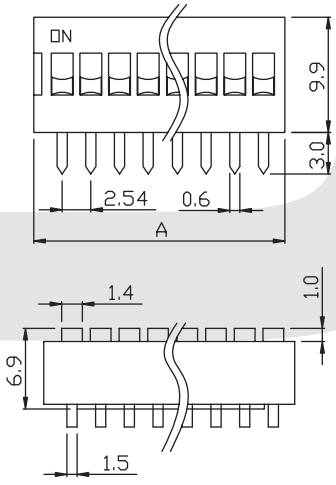

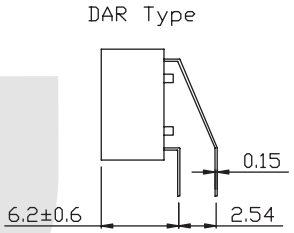

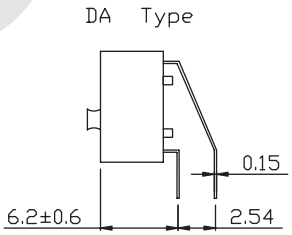

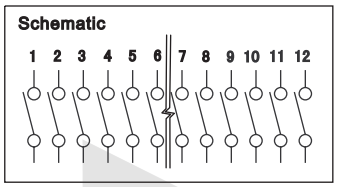

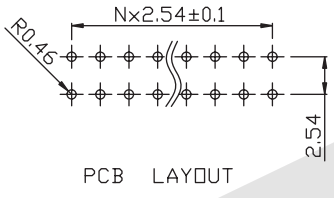

ORDER INFORMATION

KLS7-DA - XX - R - 0 0

Part Number
DA :Bulge Type Dip Switch
DAR:Recessed Type Dip Switch
Number of Pos.: 01~12 Pos.
Color: R=Red B=Blue N=Black
0:Non-sealed
1:With sealed
Packing: 0=Tube 1 = Tape

DIP Switch Series

KLS7-KM DIP Switch Series

SPECIFICATIONS

Mechanical life: 2000 operations per switch
Operation Force : ≤9.8N max.
Stroke:2.0mm
Operation Temp:-20°C~+70°C
Electrical life: 2000 operations per switch-24 VDC, 25mA
Contact Resistance: 50m max. at initial
Non-Switching Rating: 100mA, 50VDC
Switching Rating: 25mA, 24VDC
Circuit: Single pole single throw

Soldering and Cleaning Processes
Keep all switch contacts in their "OFF" position for all operations

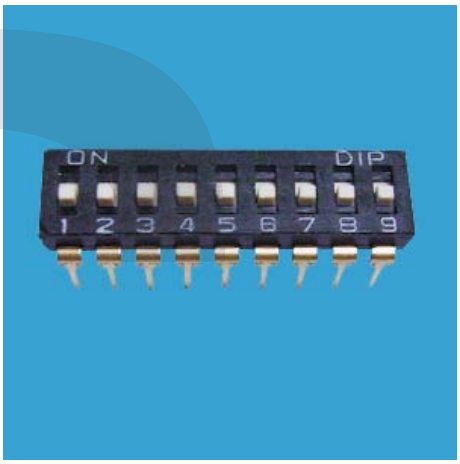

Model No.	No. Pos.	A
KM-02	2	6.02
KM-03	3	8.56
KM-04	4	11.10
KM-05	5	13.64
KM-06	6	16.18
KM-07	7	18.72
KM-08	8	21.26
KM-09	9	23.86
KM-10	10	26.34
KM-12	12	31.42

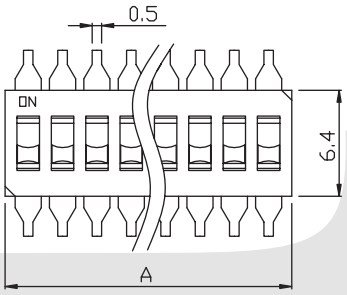

KM Type

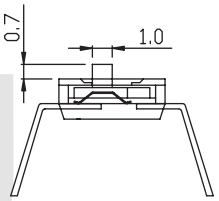

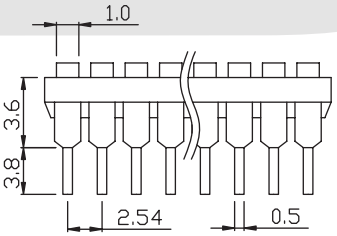

KMR Type

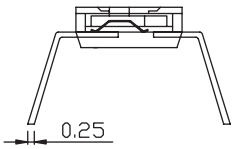

Schematic

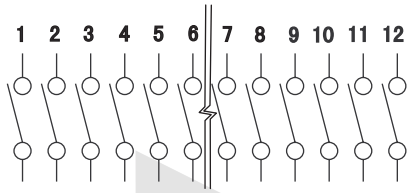

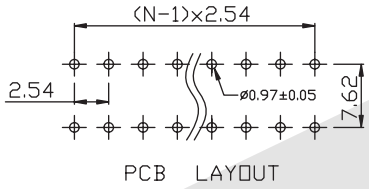

PCB LAYOUT

ORDER INFORMATION

KLS7-KM - XX - N - 0 0

Part Number
KM: Bulge Type Dip Switch
KMR: Recessed Type Dip Switch
Number of Pos.: 02~12 Pos.

Color: N=Black
0:Non-sealed
1:With sealed
Packaging: 0=Tube 1=Tape

DIP Switch Series

KLS7-KL-SMT Type DIP Switch Series

SPECIFICATIONS

Mechanical life: 2000 operations per switch
Operation Force : ≤9.8N max.
Stroke:2.0mm
Operation Temp:-20°C~+70°C
Electrical life: 2000 operations per switch-24 VDC, 25mA
Contact Resistance: 50m max. at initial
Non-Switching Rating: 100mA, 50VDC
Switching Rating: 25mA, 24VDC
Circuit: Single pole single throw

Soldering and Cleaning Processes
Keep all switch contacts in their "OFF" position for all operations

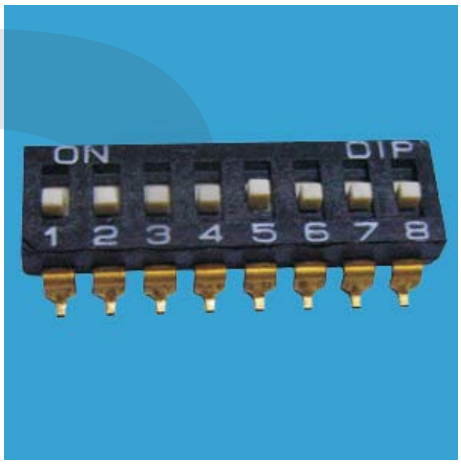

Model No.	No. Pos.	A
KL-02	2	6.02
KL-03	3	8.56
KL-04	4	11.10
KL-05	5	13.64
KL-06	6	16.18
KL-07	7	18.72
KL-08	8	21.26
KL-09	9	23.86
KL-10	10	26.34
KL-12	12	31.42

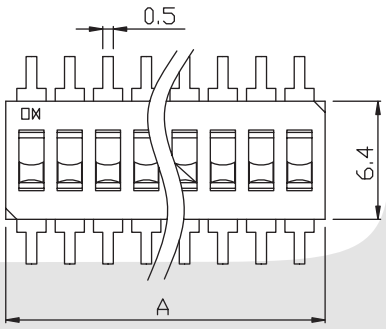

KL Type

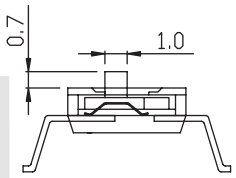

KLR Type

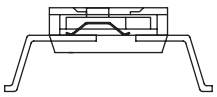

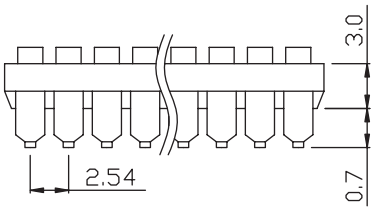

Schematic

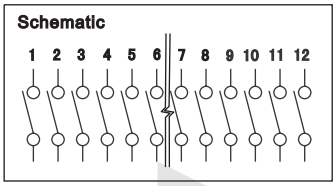

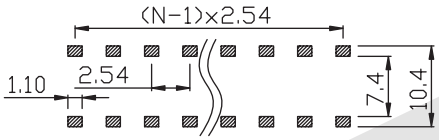

PCB LAYOUT

ORDER INFORMATION

KLS7-KL - XX - N - 0 0

Part Number
KL :Bulge Type Dip Switch
KLR:Recessed Type Dip Switch
Number of Pos.: 02~12 Pos.

Color: N=Black

Packaging: 0=Tube 1=Tape
0:Non-sealed
1:With sealed

DIP Switch Series

KLS7-KPR SMT Type DIP Switch Series

SPECIFICATIONS

Mechanical life: 2000 operations per switch
Operation Force : ≤9.8N max.
Stroke:2.0mm
Operation Temp:-20°C~+70°C
Electrical life: 2000 operations per switch-24 VDC, 25mA
Contact Resistance: 50m max. at initial
Non-Switching Rating: 100mA, 50VDC
Switching Rating: 25mA, 24VDC
Circuit: Single pole single throw

Soldering and Cleaning Processes
Keep all switch contacts in their "OFF" position for all operations

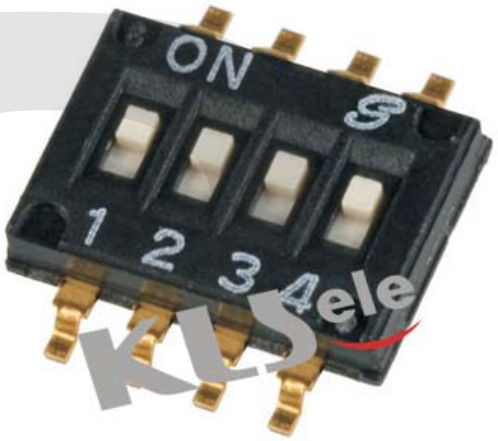

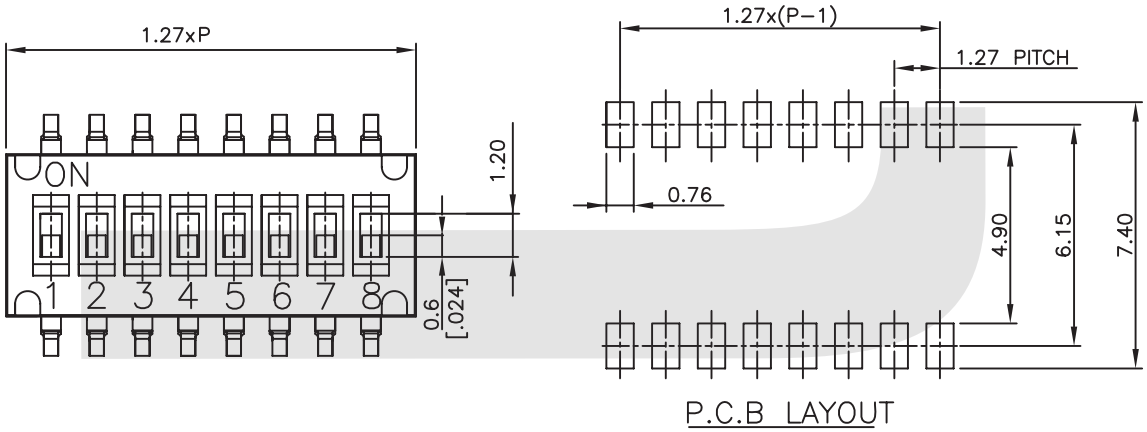

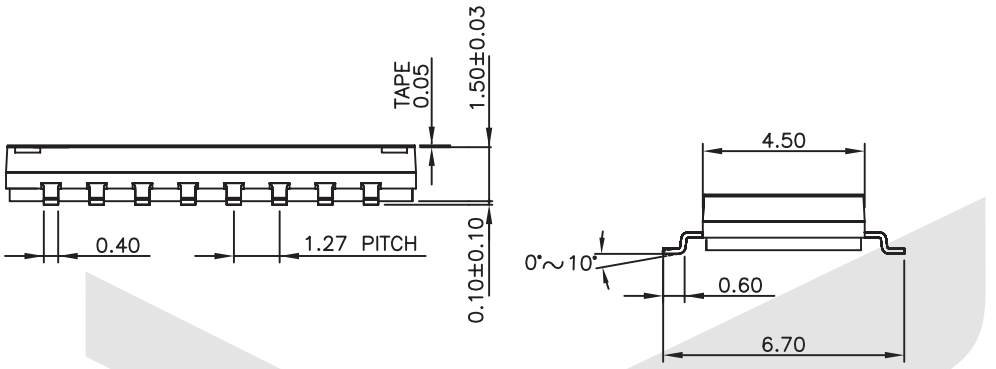

ORDER INFORMATION

KLS7-KPR- XX - N - 0 0

Part Number
KPR:Recessed Type Dip Switch
Number of Pos.: 02~12 Pos.
Color: N=Black
Packaging: 0=Tube 1=Tape
0:Non-sealed
1:With sealed

Switch

KLS electronic
www.cnkls.com

VII

DIP Switch Series

KLS7-KPH(1. 27MM)

Rating:25mA 24 VDC
Half Pitch Type
Pin Pitch: 1.27mm
Top Tape Sealed
Operation Force :500gf max.
Dielectric Strengh:AC 300V/Minute
Insulation Resistance:100 MΩ Mim 500V DC
Contact Resistance:100MΩ Max.
Operation Temp: -40/+85
Electrical life:1000 operations
Mechanical life:1000 operations

FUNCTION:
2 , 4 , 6 , 8 , 10 positions

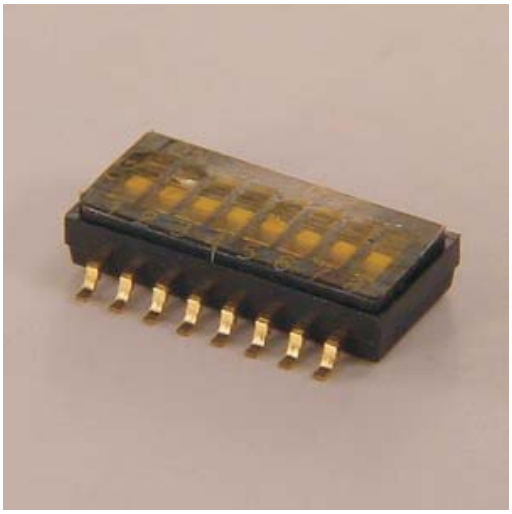

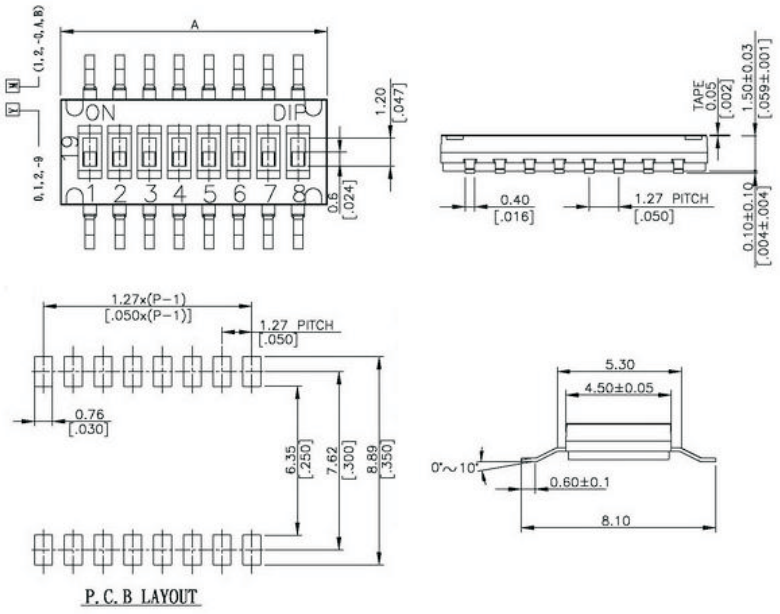

ORDER INFORMATION

DIP Switch Series

KLS7-RS10 Rotary Dip Switch Series

ELECTRICAL
Switching: 25mA,24VDC
No-switching: 100mA,50VDC
Contact resistance: 100m Max.
Lnsuation resistance: 1000M Min.at 100VDC
Dielectric strength: 250VAC for 60 seconds

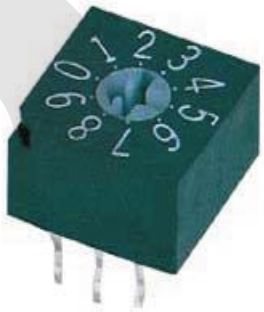

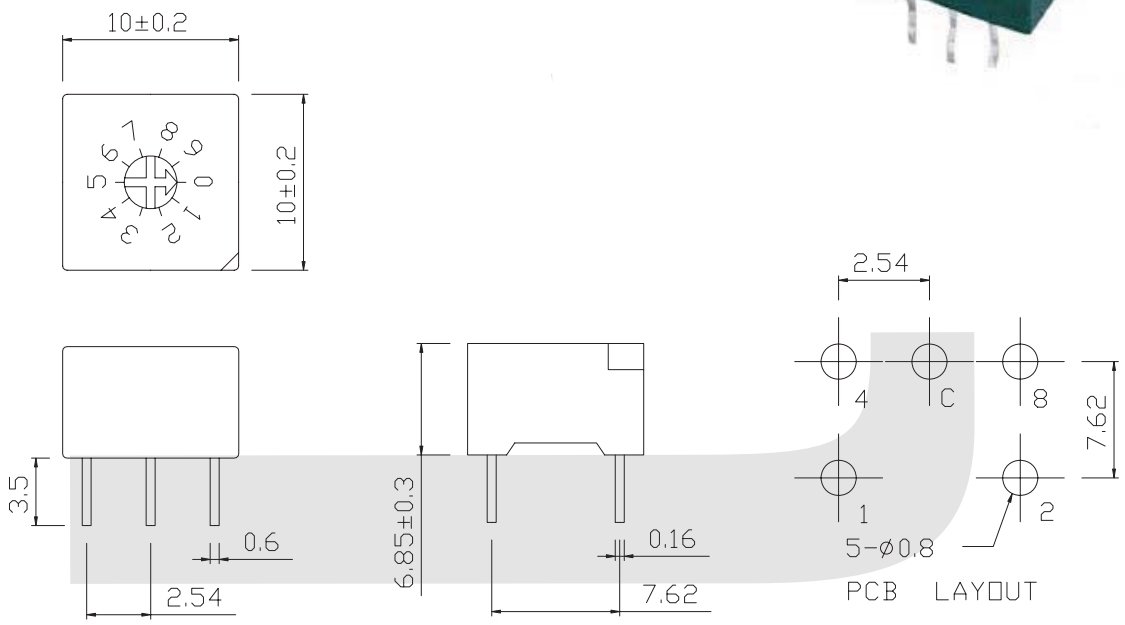

PIN NO.	POSITION									
	0	1	2	3	4	5	6	7	8	9
1		●		●		●		●		●
2			●	●			●	●		
4					●	●	●	●		
8									●	●

ORDER INFORMATION

KLS7- RS10

Part Number

Rs10: ROTARY DIP SWITCH

DIP Switch Series

KLS7-RS16 Rotary Dip Switch Series

ELECTRICAL
Switching: 25mA,24VDC
No-switching: 100mA,50VDC
Contact resistance: 100m Max.
Lnsuation resistance: 1000M Min.at 100VDC
Dielectric strength: 250VAC for 60 seconds

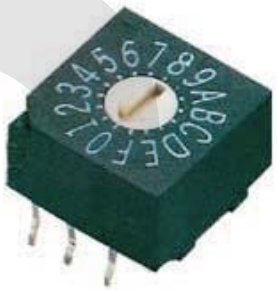

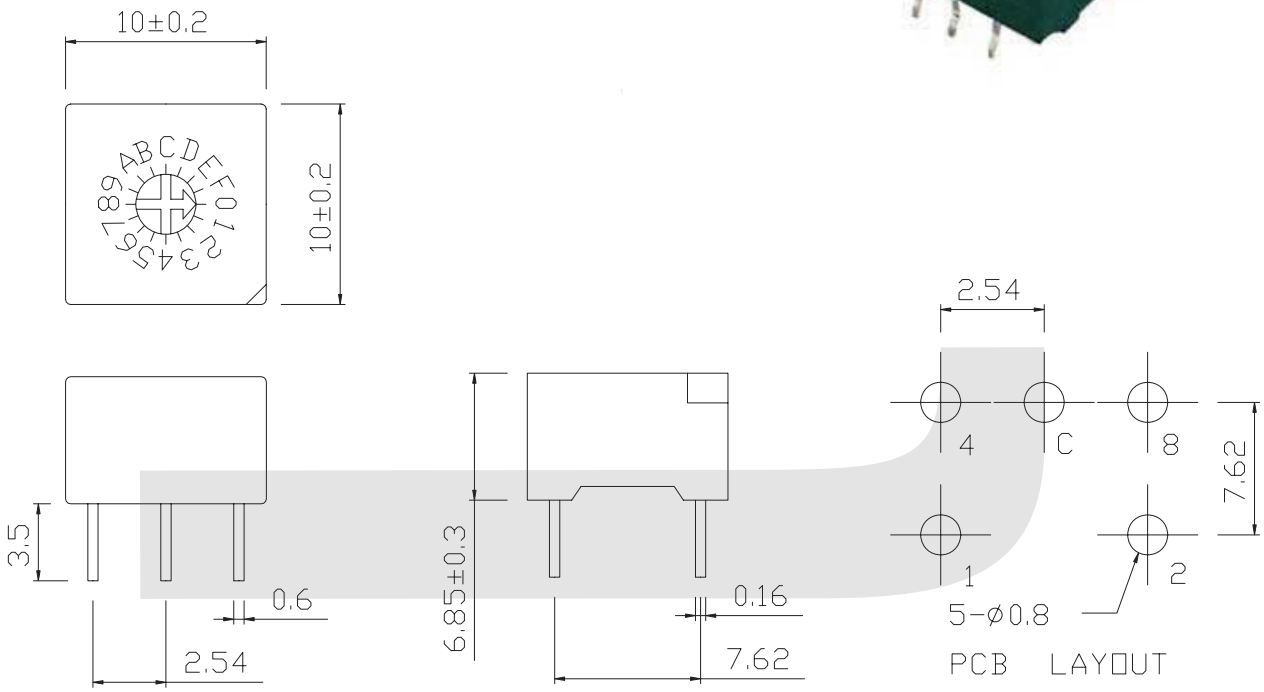

PIN NO.	POSITION															
	0	1	2	3	4	5	6	7	8	9	A	B	C	D	E	F
1	○	●	○	●	○	●	○	●	○	●	○	●	○	●	○	●
2	○	○	●	●	○	○	●	●	○	○	●	●	○	○	●	●
4	○	○	○	○	●	●	●	●	○	○	○	○	●	●	●	●
8	○	○	○	○	○	○	○	○	●	●	●	●	●	●	●	●

●–Real Code Rotor
Color:Yellow (3:3)

○–Complement Code Rotor
Color:Red (3:3)

ORDER INFORMATION

KLS7- RS16

Part Number

Rs16: ROTARY DIP SWITCH

DIP Switch Series

KLS7-RSL10 Rotary Dip Switch Series

ELECTRICAL
Switching: 25mA,24VDC
No-switching: 100mA,50VDC
Contact resistance: 100m Max.
Lnsuation resistance: 1000M Min.at 100VDC
Dielectric strength: 250VAC for 60 seconds

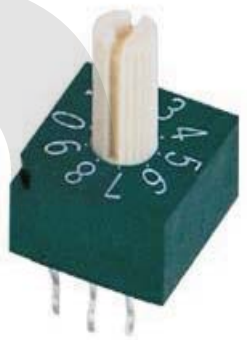

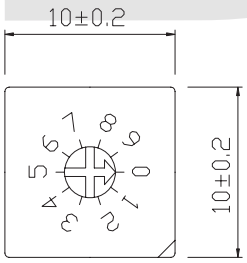

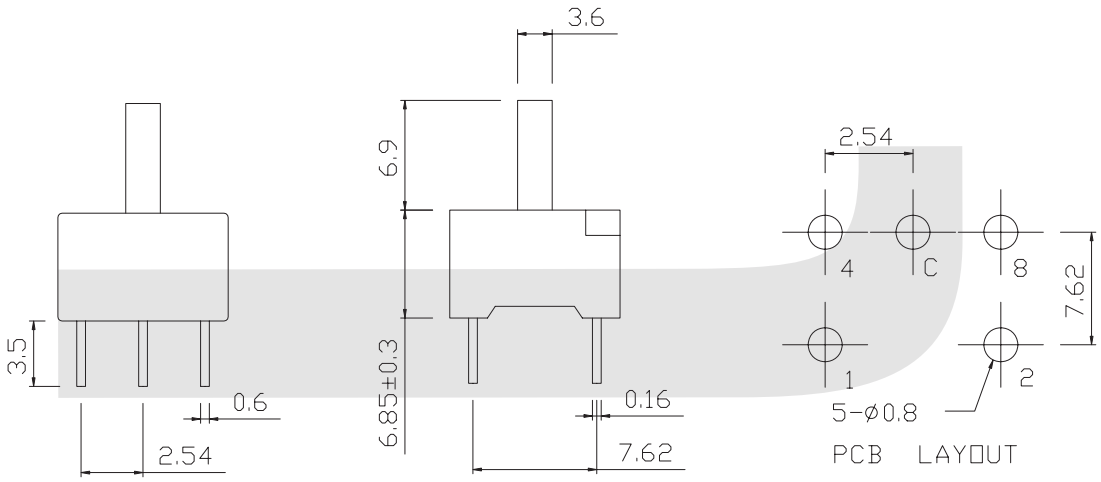

PIN NO.	POSITION									
	0	1	2	3	4	5	6	7	8	9
1		●		●		●		●		●
2			●	●			●	●		
4					●	●	●	●		
8									●	●

ORDER INFORMATION

KLS7- RSL10

Part Number

RSL10: ROTARY DIP SWITCH

DIP Switch Series

KLS7-RSL16 Rotary Dip Switch Series

ELECTRICAL
Switching: 25mA,24VDC
No-switching: 100mA,50VDC
Contact resistance: 100m Max.
Lnsuation resistance: 1000M Min.at 100VDC
Dielectric strength: 250VAC for 60 seconds

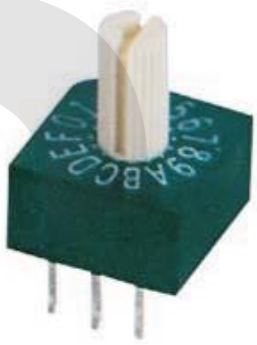

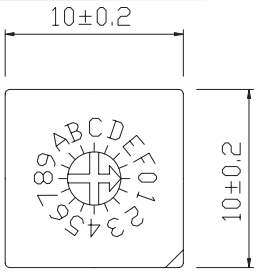

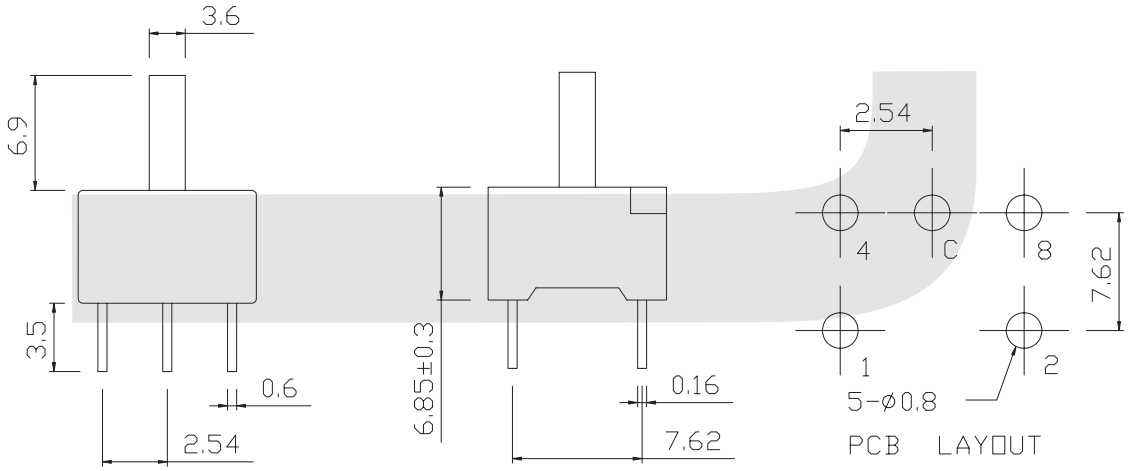

PIN NO.	POSITION															
	0	1	2	3	4	5	6	7	8	9	A	B	C	D	E	F
1	○	●	○	●	○	●	○	●	○	●	○	●	○	●	○	●
2	○	○	●	●	○	○	●	●	○	○	●	●	○	○	●	●
4	○	○	○	○	●	●	●	●	○	○	○	○	●	●	●	●
8	○	○	○	○	○	○	○	○	●	●	●	●	●	●	●	●

●–Real Code Rotor
Color:Yellow (3:3)

○–Complement Code Rotor
Color:Red (3:3)

ORDER INFORMATION

KLS7-RSL 16

Part Number

RSL16: ROTARY DIP SWITCH

DIP Switch Series

KLS7-RS31000 Rotary Dip Switch Series

ELECTRICAL
Switching: 25mA,24VDC
No-switching: 100mA,50VDC
Contact resistance: 100m Max.
Lnsuation resistance: 1000M Min.at 100VDC
Dielectric strength: 250VAC for 60 seconds

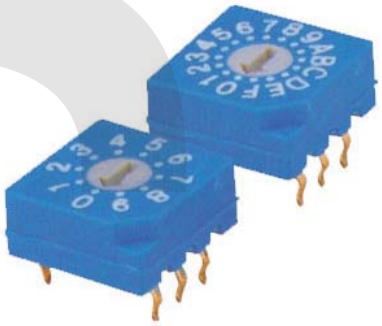

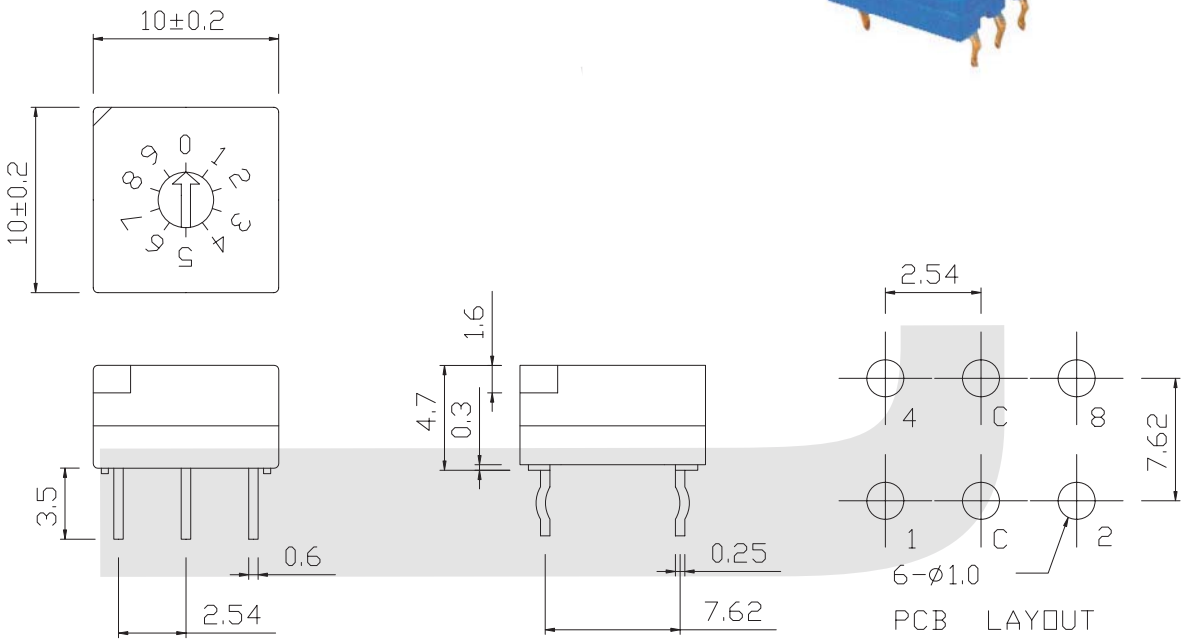

PIN NO.	POSITION									
	0	1	2	3	4	5	6	7	8	9
1		●		●		●		●		●
2			●	●			●	●		
4					●	●	●	●		
8									●	●

●–Real Code Rotor
Color:Yellow (3:3)

○–Complement Code Rotor
Color:Red (3:3)

ORDER INFORMATION

KLS7-RS 3 10 00

Part Number

RS: ROTARY DIP SWITCH

Termina Tions: 2=3x2 3=3x3 4=4x1

Codes: 10=BCD 10 Position
50=BCD Compl 10 Position
00=Others
16=BCD 16 Position
56=BCD Compl 16 Position

Handle: 00 - Flat
03 - 3.0mm
07 - 7.0mm
13 - ø10x3mm wheel

DIP Switch Series

VII

KLS7-RS31600 Rotary Dip Switch Series

ELECTRICAL
Switching: 25mA,24VDC
No-switching: 100mA,50VDC
Contact resistance: 100m Max.
Lnsuation resistance: 1000M Min.at 100VDC
Dielectric strength: 250VAC for 60 seconds

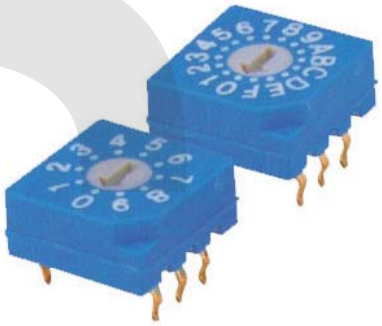

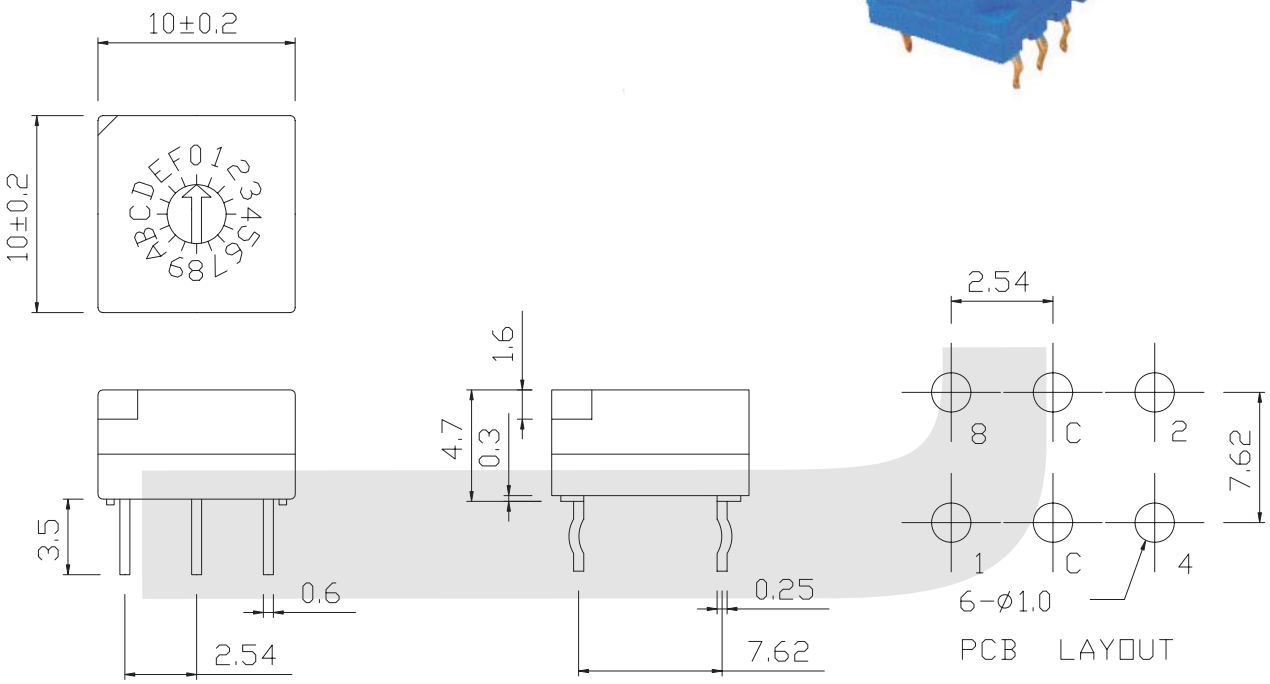

PIN NO.	POSITION															
	0	1	2	3	4	5	6	7	8	9	A	B	C	D	E	F
1	○	●	○	●	○	●	○	●	○	●	○	●	○	●	○	●
2	○	○	●	●	○	○	●	●	○	○	●	●	○	○	●	●
4	○	○	○	○	●	●	●	●	○	○	○	○	●	●	●	●
8	○	○	○	○	○	○	○	○	●	●	●	●	●	●	●	●

●–Real Code Rotor
Color:Yellow (3:3)

○–Complement Code Rotor
Color:Red (3:3)

ORDER INFORMATION

KLS7-RS 3 16 00

Part Number

RS: ROTARY DIP SWITCH

Termina Tions: 2=3x2 3=3x3 4=4x1

Handle: 00 - Flat
03 - 3.0mm
07 - 7.0mm
13 - ø10x3mm wheel

Codes: 10=BCD 10 Position
50=BCD Compl 10 Position
00=Others
16=BCD 16 Position
56=BCD Compl 16 Position

DIP Switch Series

KLS7-RS35007 Rotary Dip Switch Series

ELECTRICAL
Switching: 25mA,24VDC
No-switching: 100mA,50VDC
Contact resistance: 100m Max.
Lnsuation resistance: 1000M Min.at 100VDC
Dielectric strength: 250VAC for 60 seconds

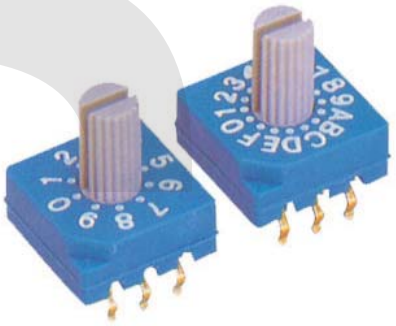

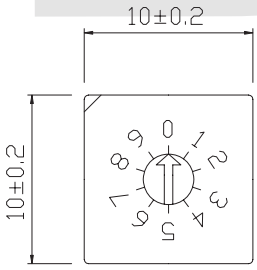

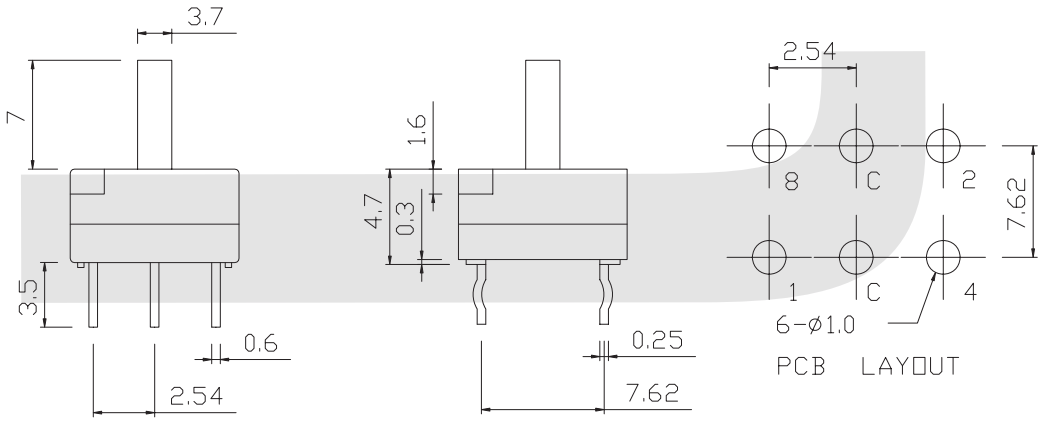

PIN NO.	POSITION									
	0	1	2	3	4	5	6	7	8	9
1		●		●		●		●		●
2			●	●			●	●		
4					●	●	●	●		
8									●	●

●–Real Code Rotor
Color:Yellow (3:3)

○–Complement Code Rotor
Color:Red (3:3)

ORDER INFORMATION

KLS7-RS 3 50 07

Part Number

RS: ROTARY DIP SWITCH

Termina Tions: 2=3x2 3=3x3 4=4x1

Handle: 00 - Flat
03 - 3.0mm
07 - 7.0mm
13 - ø10x3mm wheel

Codes: 10=BCD 10 Position
50=BCD Compl 10 Position
00=Others
16=BCD 16 Position
56=BCD Compl 16 Position

DIP Switch Series

KLS7-RS35607 Rotary Dip Switch Series

ELECTRICAL
Switching: 25mA,24VDC
No-switching: 100mA,50VDC
Contact resistance: 100m Max.
Lnsuation resistance: 1000M Min.at 100VDC
Dielectric strength: 250VAC for 60 seconds

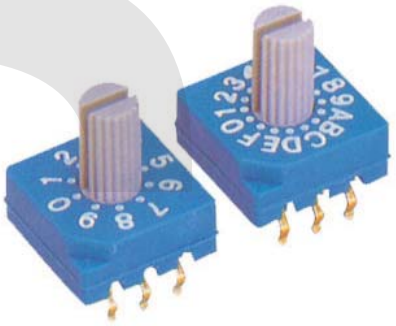

PIN NO.	POSITION															
	0	1	2	3	4	5	6	7	8	9	A	B	C	D	E	F
1	○	●	○	●	○	●	○	●	○	●	○	●	○	●	○	●
2	○	○	●	●	○	○	●	●	○	○	●	●	○	○	●	●
4	○	○	○	○	●	●	●	●	○	○	○	○	●	●	●	●
8	○	○	○	○	○	○	○	○	●	●	●	●	●	●	●	●

●–Real Code Rotor
Color:Yellow (3:3)

○–Complement Code Rotor
Color:Red (3:3)

ORDER INFORMATION

KLS7-RS 3 56 07

Part Number

RS: ROTARY DIP SWITCH

Termina Tions: 2=3x2 3=3x3 4=4x1

Handle: 00 - Flat
03 - 3.0mm
07 - 7.0mm
13 - ø10x3mm wheel

Codes: 10=BCD 10 Position
50=BCD Compl 10 Position
00=Others
16=BCD 16 Position
56=BCD Compl 16 Position

KLS

3-Buttons,Switches-Компоненты коммутации: выключатели, переключатели, кнопки

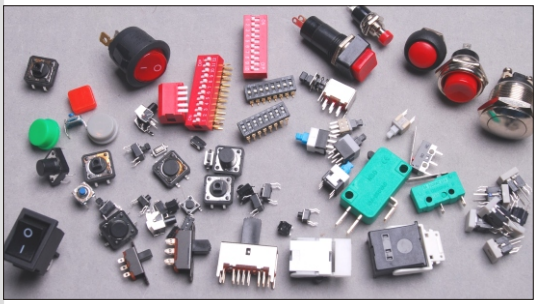

3-1	DIP switch
3-2	**Tactile switch**
3-3	Hook switch
3-4	Magnetic reed switches
3-5	Snap Action switches/Micro switches
3-6	Navigation joystick switches
3-7	Pushbutton switches
3-8	Rocker switches
3-9	Rotary switches
3-10	Slide switches

More . . .



KLS ELECTRONIC CO; LTD. WWW.CNKLS.COM Email:sales@cnkls.com
Tel:0086 574 86824882 Fax:0086 574 86824882

Tact Switch Series

KLS7-TS2435 2x4 Tact Switch Series

ELECTRICAL

1.Rating: 20mA 12VDC
2.Contact Resistance : 50mΩ Max.
3.Insulation Resistance: 100MΩ Min.
4.Dielectric Strength : AC250V(50/60Hz for 1minute)
5.Electrically Life: 50, 000cycles
6.Environment temperature:-25°C~+70°C
7.Operating Force: 160/250(±30gf)
8.Seal temperature:260°C~ 280°C



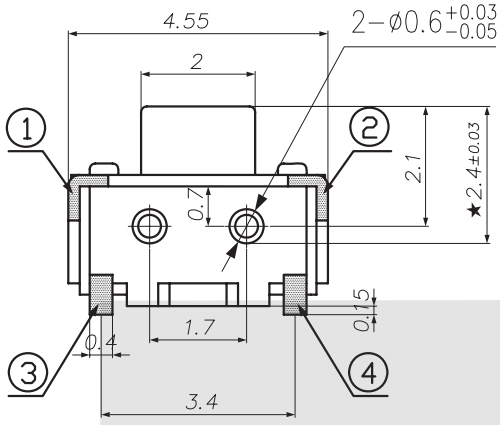

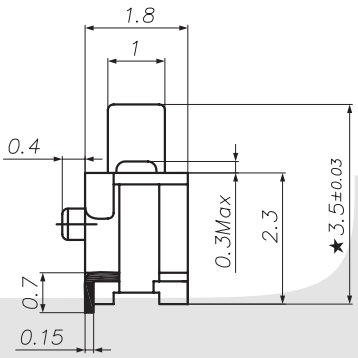

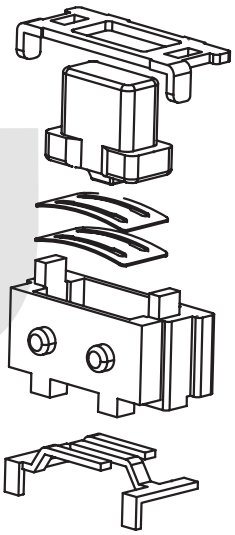

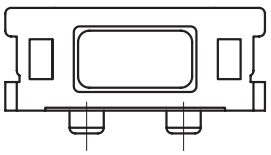

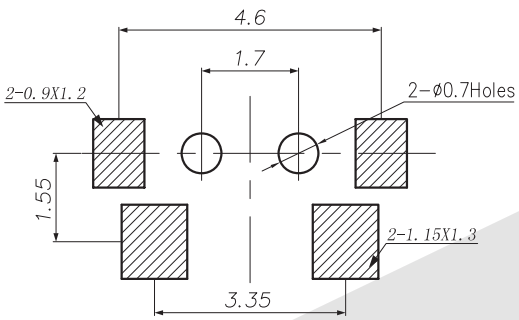

SCHEMATIC

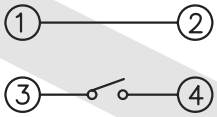

ORDER INFORMATION

KLS7-TS2435 - 160 -T

Series No.

Packing: B-Bulk T-Tape

Operating Force :160~250gf

Tact Switch Series

KLS7-TS3301 3.3x3.3 Tact Switch Series

ELECTRICAL

1.Rating: 20mA 12VDC
2.Contact Resistance : 50mΩ Max.
3.Insulation Resistance: 100MΩ Min.
4.Dielectric Strength : AC250V(50/60Hz for 1minute)
5.Electrically Life: 50, 000cycles
6.Environment temperature:-25°C~+70°C
7.Operating Force: 160/250(±30gf)
8.Seal temperature:260°C~ 280°C



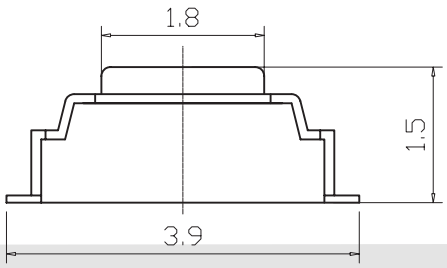

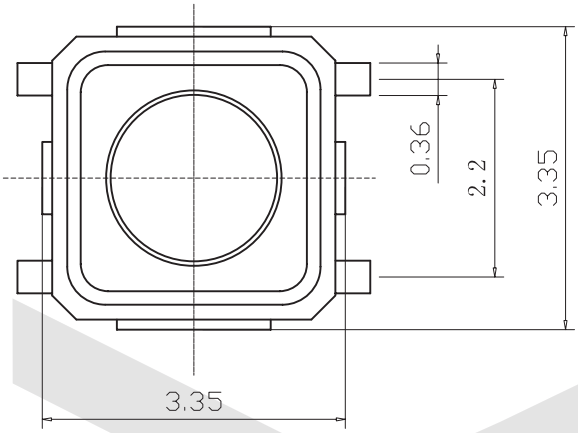

P.C.B Mounting

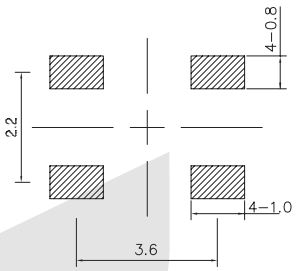

ORDER INFORMATION

KLS7-TS3301 - 160 -T

Series No.

Packing: B-Bulk T-Tape

Operating Force :160~250gf

Tact Switch Series

KLS7-TS3302 3x4 Tact Switch Series

ELECTRICAL

1.Rating: 50mA 12VDC
2.Contact Resistance : 50mΩ Max.
3.Insulation Resistance: 100MΩ Min.
4.Dielectric Strength : AC250V(50/60Hz for 1minute)
5.Electrically Life: 100, 000cycles
6.Environment temperature:-25ºC~+70ºC
7.Operating Force: 160/250(±30gf)
8.Seal temperature:260ºC~ 280ºC



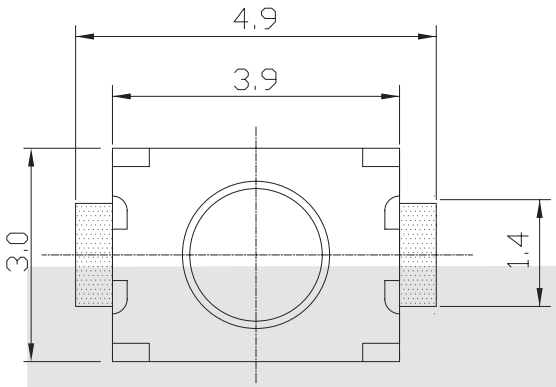

CIRCUIT DIAGRAM

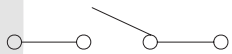

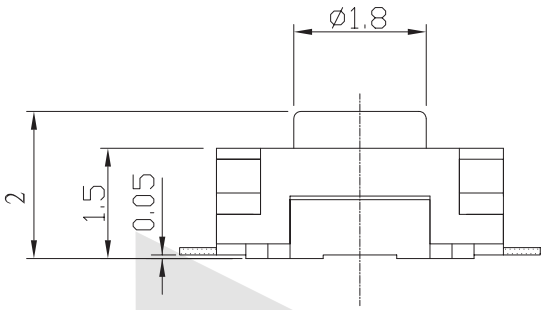

SMD REFLOW PATTERN

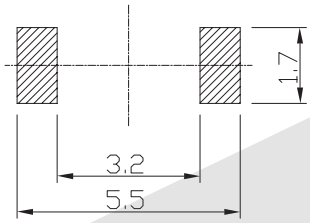

ORDER INFORMATION

KLS7-TS3302 - 160 -T

Series No.

Packing: B-Bulk T-Tape

Operating Force :160~250gf

Tact Switch Series

KLS7-TS3601 3x6 Tact Switch Series

ELECTRICAL

1.Rating: 50mA 12VDC
2.Contact Resistance : 50mΩ max(initial)
3.Insulation Resistance: 100MΩ(minDC 250V)
4.Dielectric Strength : AC250V(50/60Hz for 1minute)
5.Electrically Life: 100000cycles
6.Environment temperature:-30°C~+120°C
7.Operating Force: 180/250(±30gf)
8.Seal temperature:260°C~ 280°C



Dimension (unit: mm)

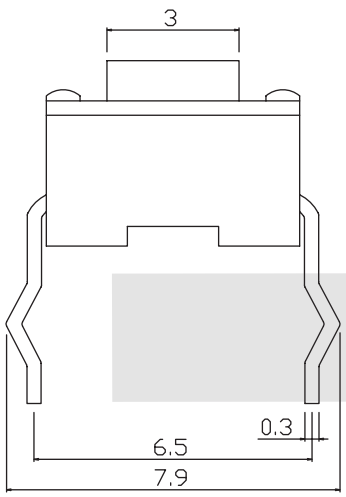

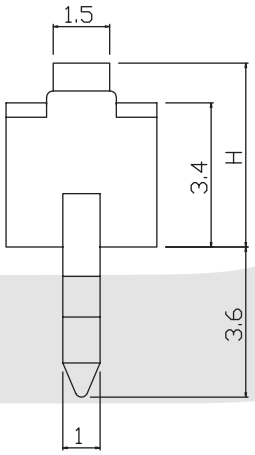

H
4.3
5.0

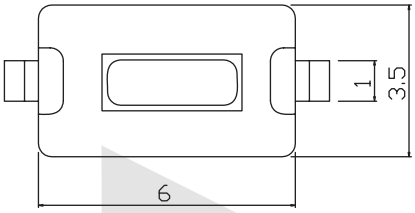

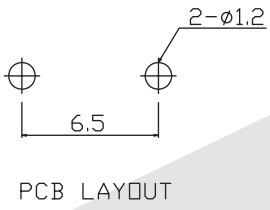

PCB LAYOUT

ORDER INFORMATION

KLS7-TS3601 - 4.3 - 180

Series No.
Operating Force :180~250gf
Hight: 4.3mm / 5.0mm

Tact Switch Series

KLS7-TS3602 3x6 Tact Switch Series

ELECTRICAL

1.Rating: 50mA 12VDC
2.Contact Resistance : 50mΩ max(initial)
3.Insulation Resistance: 100MΩ(minDC 250V)
4.Dielectric Strength : AC250V(50/60Hz for 1minute)
5.Electrically Life: 100000cycles
6.Environment temperature:-30°C~+120°C
7.Operating Force: 180/250(±30gf)
8.Seal temperature:260°C~ 280°C



Dimension (unit: mm)

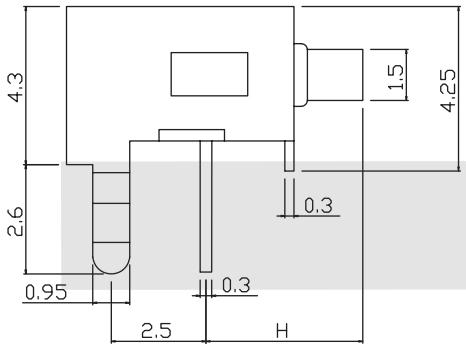

H
3.15
3.85

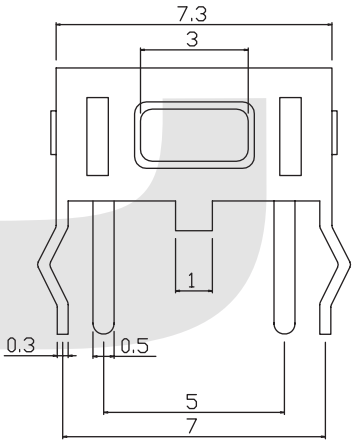

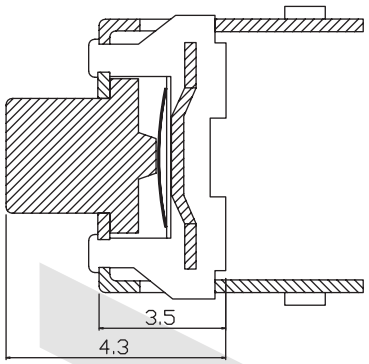

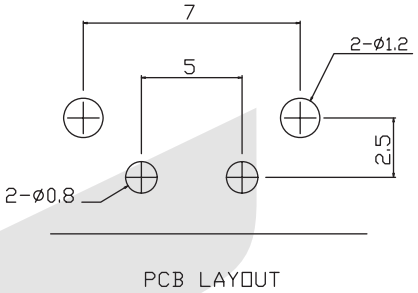

ORDER INFORMATION

KLS7-TS3602 -3.15-180

Series No. — Hight: 3.15mm/3.85mm
Operating Force :180~250gf

Tact Switch Series

KLS7-TS3603 3x6 Tact Switch Series

VII

ELECTRICAL

1.Rating: 50mA 12VDC
2.Contact Resistance : 50mΩ max(initial)
3.Insulation Resistance: 100MΩ(minDC 250V)
4.Dielectric Strength : AC250V(50/60Hz for 1minute)
5.Electrically Life: 100000cycles
6.Environment temperature:-30°C~+120°C
7.Operating Force: 180/250(±30gf)
8.Seal temperature:260°C~ 280°C



Dimension (unit: mm)

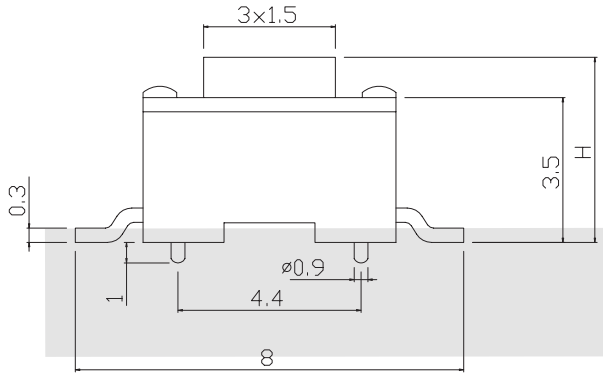

H
4.3
5.0



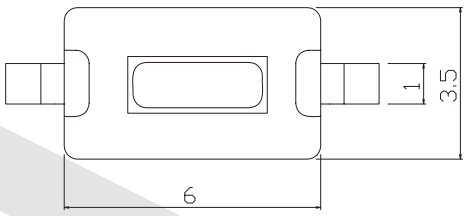

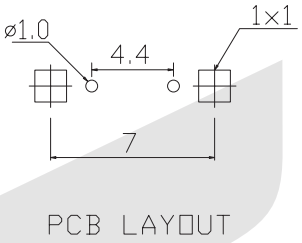

ORDER INFORMATION

KLS7-TS3603 -4.3-180 -B

Series No.
Hight: 4.3mm/5.0mm
Operating Force :180~250gf
Packing: B=Bulk T=Tape

Tact Switch Series

KLS7-TS3603B 3x6 Tact Switch Series

ELECTRICAL

1.Rating: 50mA 12VDC
2.Contact Resistance : 50mΩ max(initial)
3.Insulation Resistance: 100MΩ(minDC 250V)
4.Dielectric Strength : AC250V(50/60Hz for 1minute)
5.Electrically Life: 100000cycles
6.Environment temperature:-30°C~+120°C
7.Operating Force: 180/250(±30gf)
8.Seal temperature:260°C~ 280°C



Dimension (unit: mm)

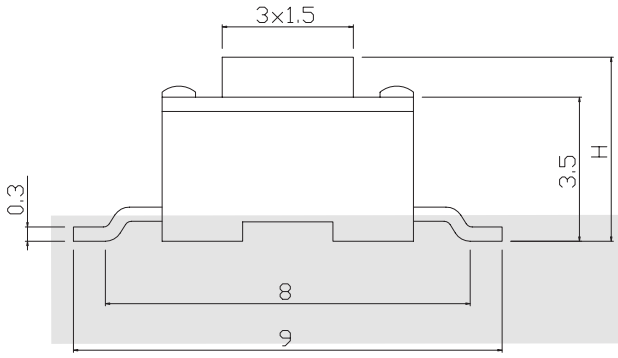

H
4.3
5.0



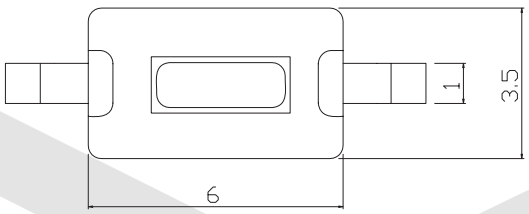

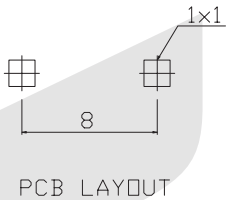

ORDER INFORMATION

KLS7-TS3603B -4.3-180 -B

Series No.
Hight: 4.3mm/5.0mm
Operating Force :180~250gf
Packing: B=Bulk T=Tape

Tact Switch Series

KLS7-TS3605 3x6 Tact Switch Series

ELECTRICAL

1.Rating: 50mA 12VDC
2.Contact Resistance : 50mΩ max(initial)
3.Insulation Resistance: 100MΩ(minDC 250V)
4.Dielectric Strength : AC250V(50/60Hz for 1minute)
5.Electrically Life: 100000cycles
6.Environment temperature:-30°C~+120°C
7.Operating Force: 180/250(±30gf)
8.Seal temperature:260°C~ 280°C



Dimension (unit: mm)

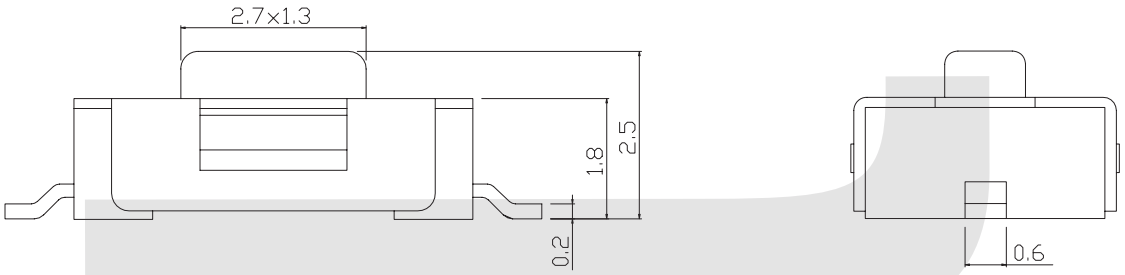

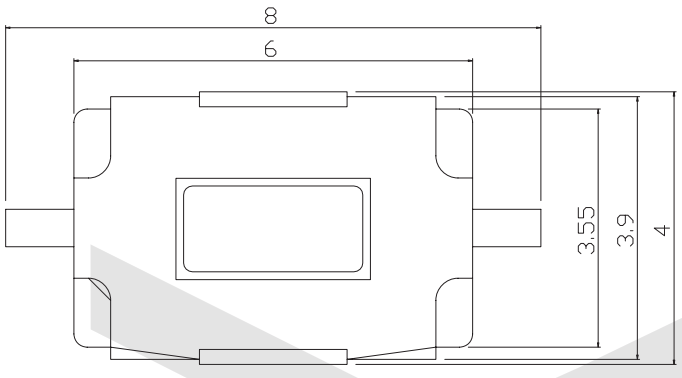



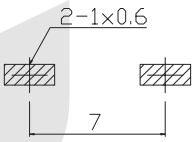

PCB LAYOUT

ORDER INFORMATION

KLS7-TS3605 -2.5- 180 -B

Series No.
Hight: 2.5mm
Operating Force :180~250gf
Packing: B=Bulk T=Tape

Tact Switch Series

KLS7-TS3606 3x6 Tact Switch Series

ELECTRICAL

1.Rating: 50mA 12VDC
2.Contact Resistance : 50mΩ max(initial)
3.Insulation Resistance: 100MΩ(minDC 250V)
4.Dielectric Strength : AC250V(50/60Hz for 1minute)
5.Electrically Life: 100000cycles
6.Environment temperature:-30°C~+120°C
7.Operating Force: 180/250(±30gf)
8.Seal temperature:260°C~ 280°C



Dimension (unit: mm)

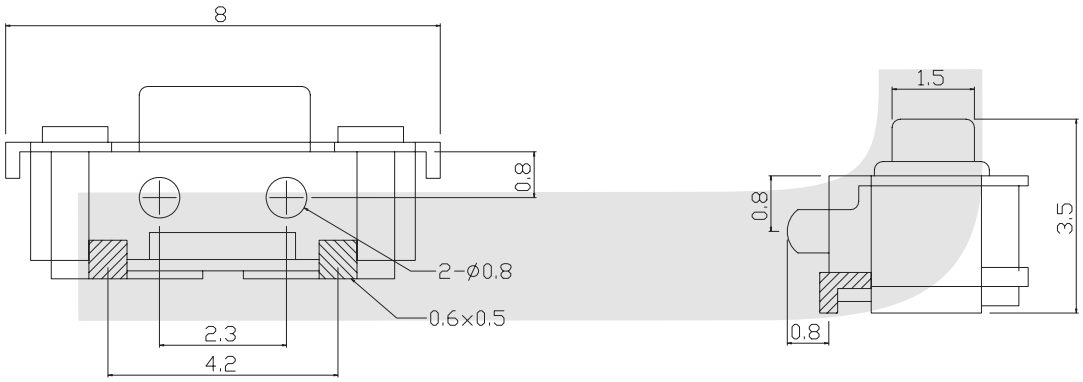

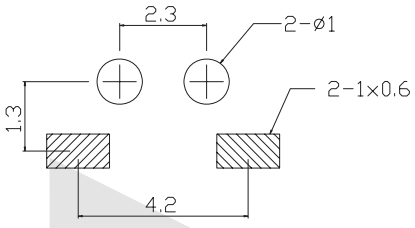

ORDER INFORMATION

KLS7-TS3606 - 3.5 - 180 -B

Series No.
Hight: 3.5mm
Operating Force :180~250gf
Packing: B=Bulk T=Tape

Tact Switch Series

KLS7-TS3606B 3x6 Tact Switch Series

ELECTRICAL

1.Rating: 50mA 12VDC
2.Contact Resistance : 50mΩ max(initial)
3.Insulation Resistance: 100MΩ(minDC 250V)
4.Dielectric Strength : AC250V(50/60Hz for 1minute)
5.Electrically Life: 50000cycles
6.Environment temperature:-25ºC~+70ºC
7.Operating Force: 180/250(±30gf)
8.Seal temperature:260ºC~ 280ºC

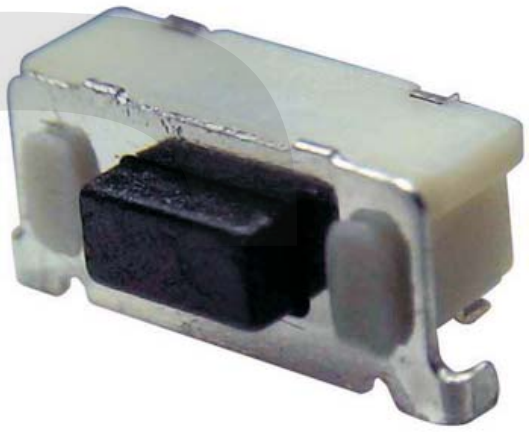

Dimension (unit: mm)

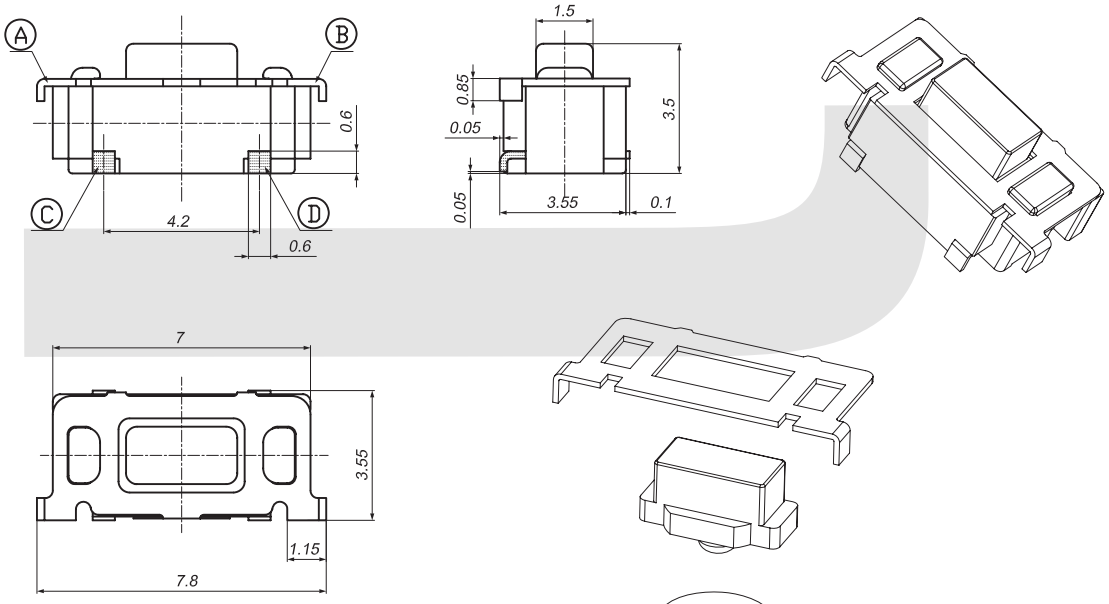

Recommended P.C.B layout

SCHEMATIC

ORDER INFORMATION

KLS7-TS3606B - 3.5 - 180 -B

- TS3606B: Series No.
- 3.5: Hight: 3.5mm
- 180: Operating Force :180~250gf
- B: Packing: B=Bulk T=Tape

Tact Switch Series

KLS7-TS3607 3x6 Tact Switch Series

ELECTRICAL

1.Rating: 50mA 12VDC
2.Contact Resistance : 50mΩ max(initial)
3.Insulation Resistance: 100MΩ(minDC 250V)
4.Dielectric Strength : AC250V(50/60Hz for 1minute)
5.Electrically Life: 100000cycles
6.Environment temperature:-30°C~+120°C
7.Operating Force: 180/250(±30gf)
8.Seal temperature:260°C~ 280°C



Dimension (unit: mm)

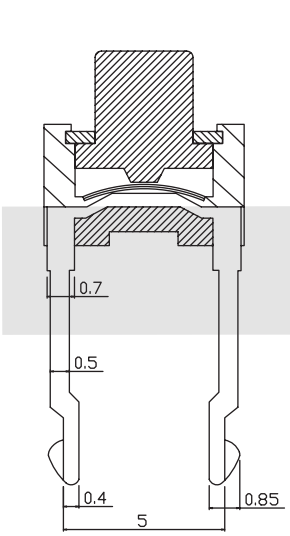

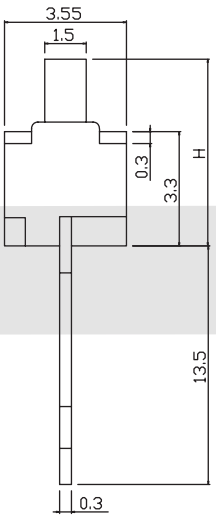

H
4.3
5.0

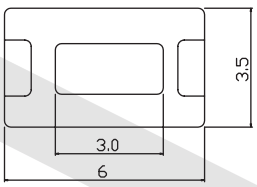

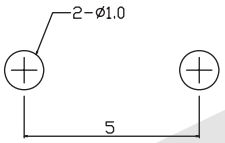

ORDER INFORMATION

KLS7-TS3607 - 4.3 - 180 -B

- Series No.
- Hight: 4.3mm/5.0mm
- Operating Force :180~250gf
- Packing: B=Bulk T=Tape

Tact Switch Series

KLS7-TS3608 3x6 Tact Switch Series

ELECTRICAL

1.Rating: 50mA 12VDC
2.Contact Resistance : 50mΩ max(initial)
3.Insulation Resistance: 100MΩ(minDC 250V)
4.Dielectric Strength : AC250V(50/60Hz for 1minute)
5.Electrically Life: 100000cycles
6.Environment temperature:-20°C~+70°C
7.Operating Force: 180/250(±30gf)
8.Seal temperature:260°C~ 280°C



Dimension (unit: mm)

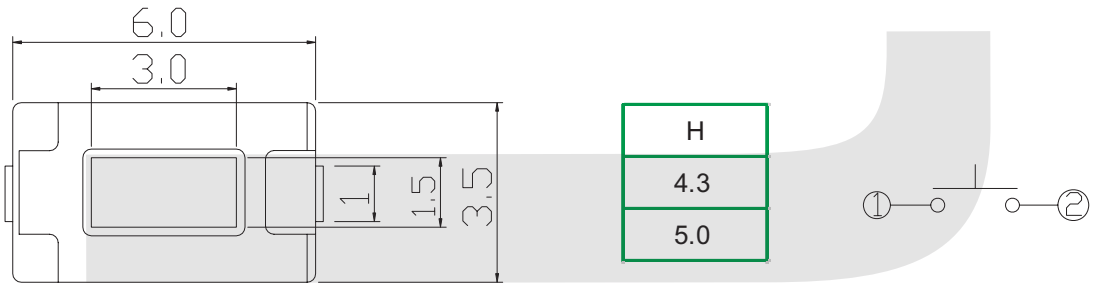

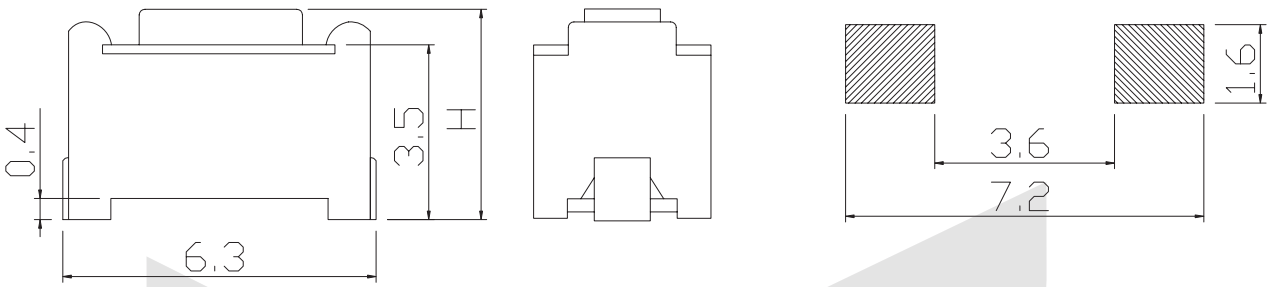

ORDER INFORMATION

KLS7-TS3608 - 4.3 - 180 -B

- Series No.
- Hight: 4.3mm/5.0mm
- Operating Force :180~250gf
- Packing: B=Bulk T=Tape

Tact Switch Series

KLS7-TS3609 3x6 Tact Switch Series

VII

ELECTRICAL

1.Rating: 50mA 12VDC
2.Contact Resistance : 50mΩ max(initial)
3.Insulation Resistance: 100MΩ(minDC 250V)
4.Dielectric Strength : AC250V(50/60Hz for 1minute)
5.Electrically Life: 100000cycles
6.Environment temperature:-20°C~+70°C
7.Operating Force: 160/220(±30gf)
8.Seal temperature:260°C~ 280°C

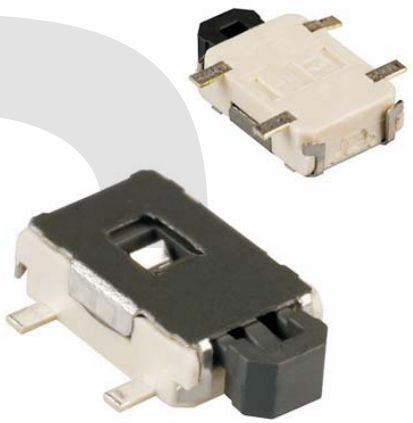

Dimension (unit: mm)

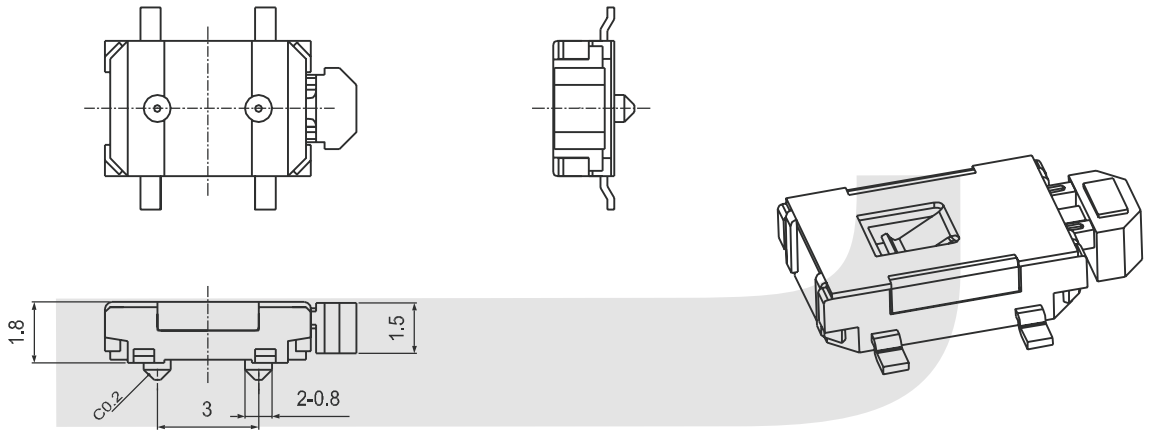

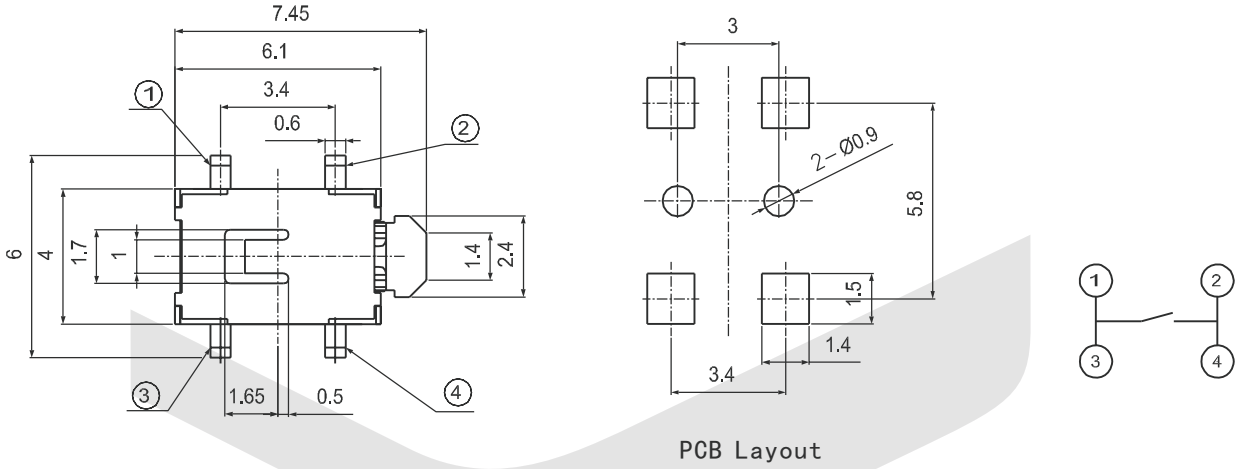

PCB Layout

ORDER INFORMATION

KLS7-TS3609 - 1.8 - 160 - B

Series No.
Hight: 1.8mm
Operating Force :160~220gf
Packing: B=Bulk T=Tape

Tact Switch Series

KLS7-TS3610 3x6 Tact Switch Series

ELECTRICAL

1.Rating: 50mA 12VDC
2.Contact Resistance : 50mΩ max(initial)
3.Insulation Resistance: 100MΩ(minDC 250V)
4.Dielectric Strength : AC250V(50/60Hz for 1minute)
5.Electrically Life: 100000cycles
6.Environment temperature:-20°C~+70°C
7.Operating Force: 180/250(±30gf)
8.Seal temperature:260°C~ 280°C

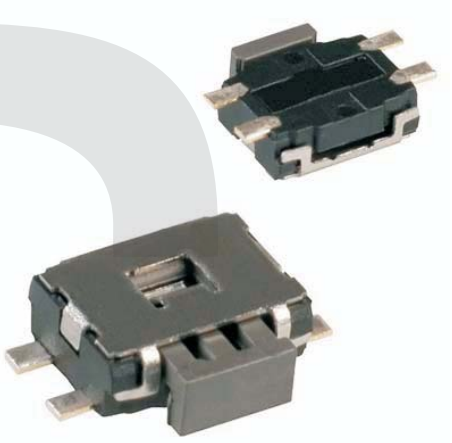

Dimension (unit: mm)

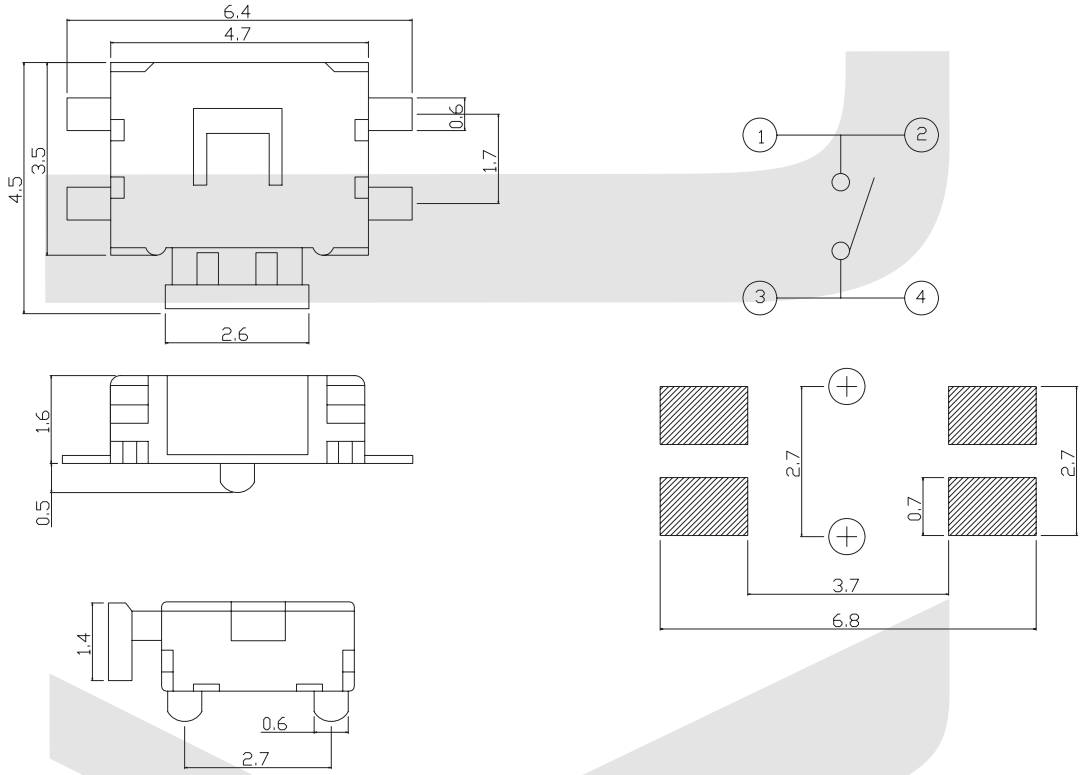

ORDER INFORMATION

KLS7-TS3610 - 1.6 - 180- B

Series No.
Hight: 1.6mm
Operating Force :180~250gf
Packing: B=Bulk T=Tape

Tact Switch Series

VII

KLS7-TS3611 3x6 SMT Tact Switch Series

ELECTRICAL

1.Rating: 50mA 12VDC
2.Contact Resistance : 50mΩ max(initial)
3.Insulation Resistance: 100MΩ(minDC 250V)
4.Dielectric Strength : AC250V(50/60Hz for 1minute)
5.Electrically Life: 100000cycles
6.Environment temperature:-20°C~+70°C
7.Operating Force: 180/250(±30gf)
8.Seal temperature:260°C~ 280°C



Dimension (unit: mm)

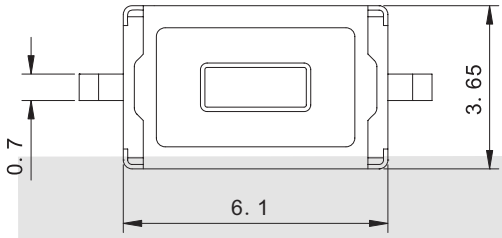

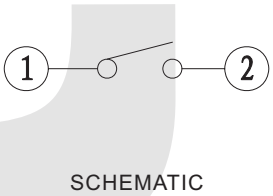

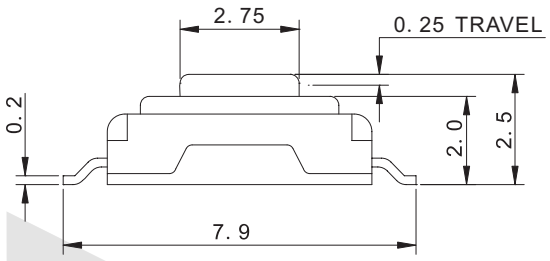

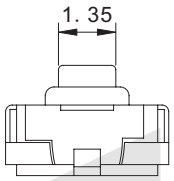

ORDER INFORMATION

KLS7-TS3611 - 2.5 - 180- B

Series No.
Hight: 2.5mm
Operating Force :180~250gf
Packing: B=Bulk T=Tape

Tact Switch Series

VII

KLS7-TS3612 3x6 Tact Switch Series

ELECTRICAL

1.Rating: 20mA 12VDC
2.Contact Resistance : 50mΩ Max.
3.Insulation Resistance: 100MΩ Min.
4.Dielectric Strength : AC250V(50/60Hz for 1minute)
5.Electrically Life: 100, 000cycles
6.Environment temperature:-25ºC~+70ºC
7.Operating Force: 160/250(±30gf)
8.Seal temperature:260ºC~ 280ºC

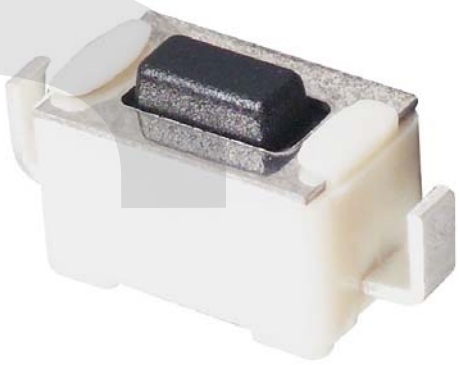

Dimension (unit: mm)

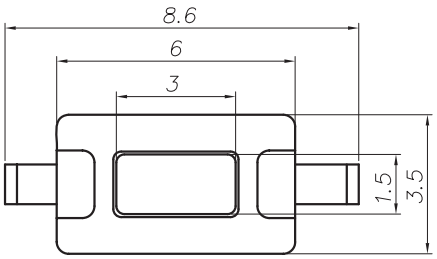

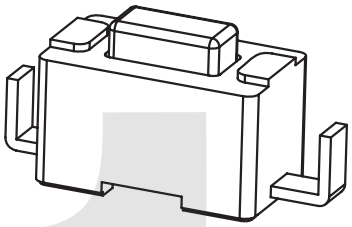

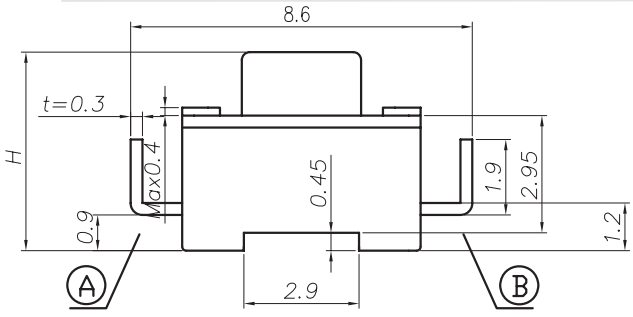

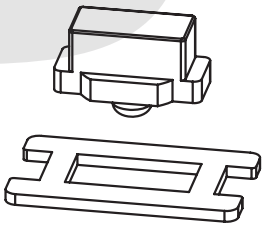

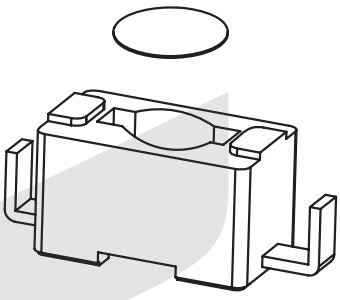

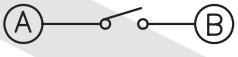

SCHEMATIC

H
4.3
5.0

ORDER INFORMATION

KLS7-TS3612 -4.3-160 -B

Series No.
Hight: 4.3mm/5.0mm
Packing: B-Bulk
Operating Force :160~250gf

Tact Switch Series

KLS7-TS3616 3x6 Tact Switch Series

ELECTRICAL

1.Rating: 20mA 12VDC
2.Contact Resistance : 50mΩ Max.
3.Insulation Resistance: 100MΩ Min.
4.Dielectric Strength : AC250V(50/60Hz for 1minute)
5.Electrically Life: 100, 000cycles
6.Environment temperature:-25ºC~+70ºC
7.Operating Force: 160/250(±30gf)
8.Seal temperature:260ºC~ 280ºC

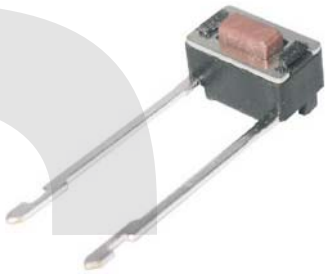

Dimension (unit: mm)

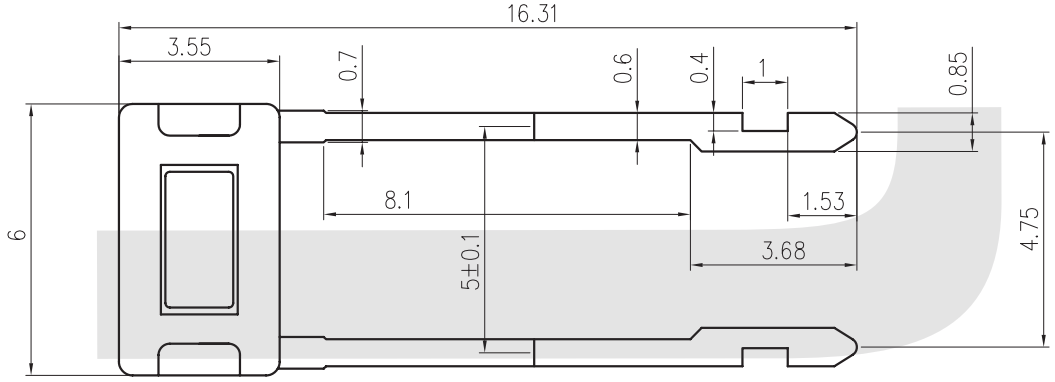

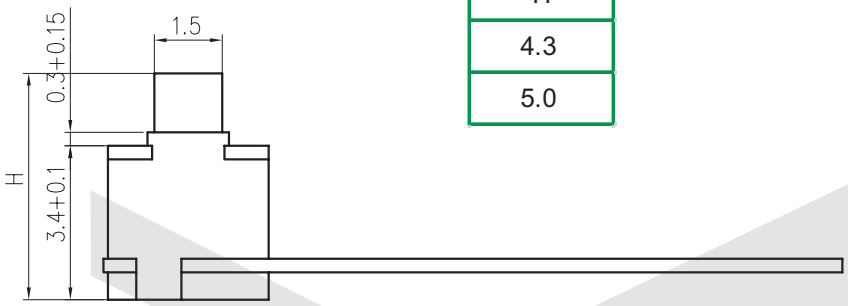

H
4.3
5.0

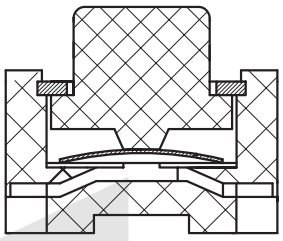

ORDER INFORMATION

KLS7-TS3616 -4.3-160 -B

Series No.
Hight: 4.3mm/5.0mm
Packing: B-Bulk
Operating Force :160~250gf

Tact Switch Series

KLS7-TS4401 4.80 x 4.80mm Tact Switch Series

ELECTRICAL

1.Rating: 20mA 12VDC
2.Contact Resistance : 50mΩ Max.
3.Insulation Resistance: 100MΩ Min.
4.Dielectric Strength : AC250V(50/60Hz for 1minute)
5.Electrically Life: 100, 000cycles
6.Environment temperature:-25ºC~+70ºC
7.Operating Force: 120/150±10gf
8.Seal temperature:260ºC~ 280ºC

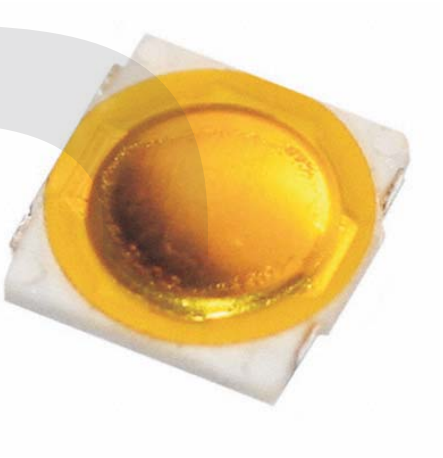

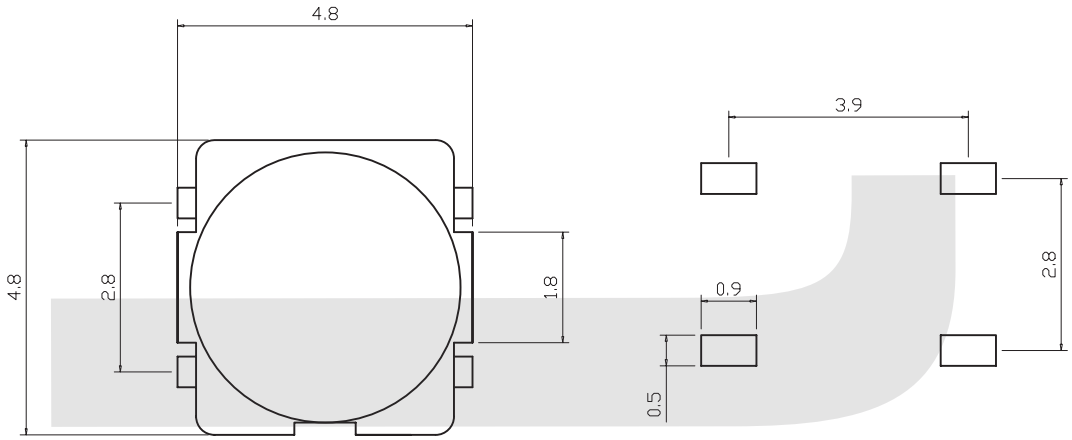

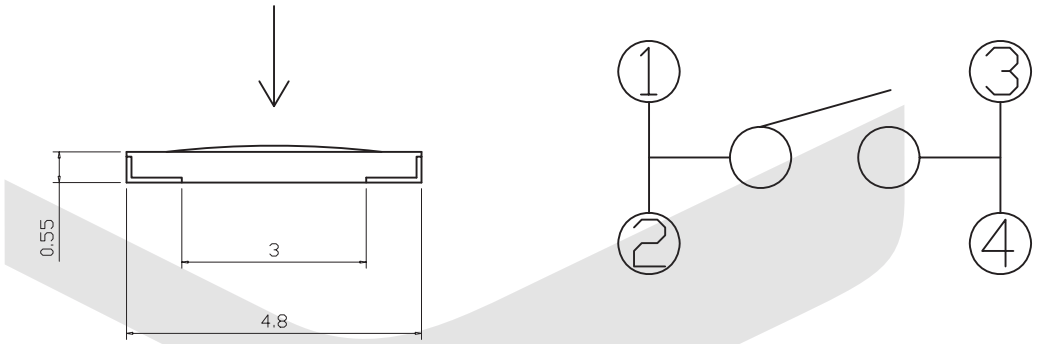

ORDER INFORMATION

KLS7-TS4401 - 120 -B

Part Number

Packing: B-Bulk T-Tape
Operating Force :120±10gf or 150±10gf

Tact Switch Series

VII

KLS7-TS4402 5.10 x 5.10mm Tact Switch Series

ELECTRICAL

1.Rating: 20mA 12VDC
2.Contact Resistance : 50mΩ Max.
3.Insulation Resistance: 100MΩ Min.
4.Dielectric Strength : AC250V(50/60Hz for 1minute)
5.Electrically Life: 100, 000cycles
6.Environment temperature:-25ºC~+70ºC
7.Operating Force: 180±30gf
8.Seal temperature:260ºC~ 280ºC

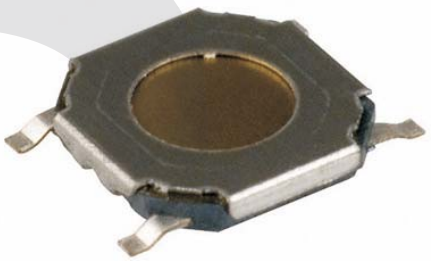

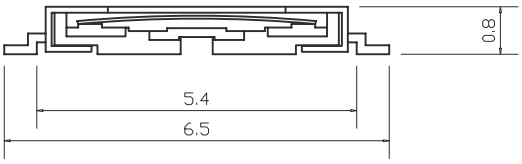

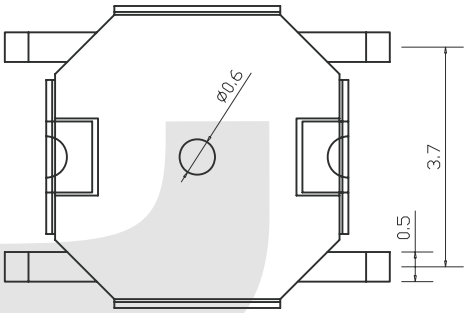

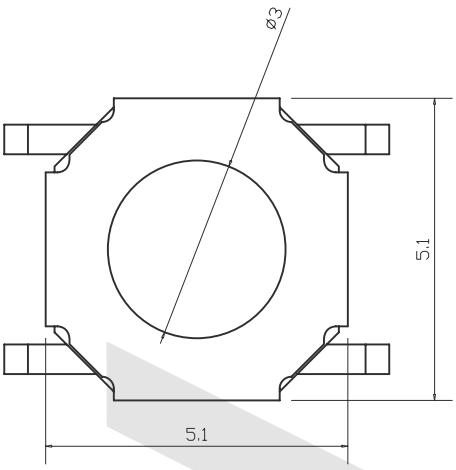

ORDER INFORMATION

KLS7-TS4402 - 180 -B

Series No.
Packing: B-Bulk T-Tape
Operating Force :180±30gf

Tact Switch Series

VII

KLS7-TS4404 4.80 x 4.80mm Tact Switch Series

ELECTRICAL

1.Rating: 20mA 12VDC
2.Contact Resistance : 50mΩ Max.
3.Insulation Resistance: 100MΩ Min.
4.Dielectric Strength : AC250V(50/60Hz for 1minute)
5.Electrically Life: 100, 000cycles
6.Environment temperature:-25°C~+70°C
7.Operating Force: 180~250±30gf
8.Seal temperature:260°C~ 280°C

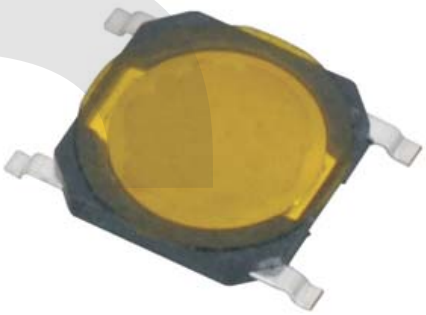

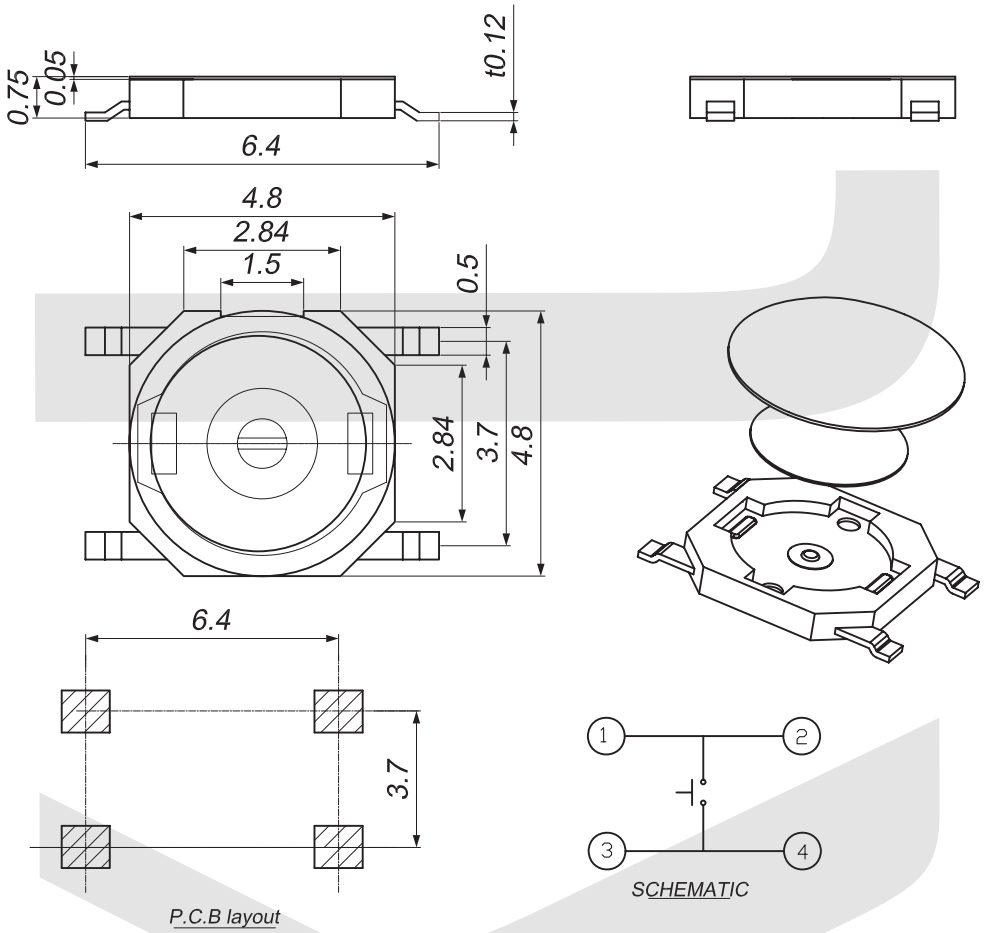

ORDER INFORMATION

KLS7-TS4404 - 180 -B

Series No.

Packing: B-Bulk T-Tape
Operating Force :180±30gf

DIP Switch Series

KLS7-TS4407

SPECIFICATIONS

SIZE: 4. 2*4. 5mm
Rating:50mA 12 VDC
Contact Resistance:50MΩ Max.
Insulation Resistance:100 MΩ Mim
Dielectric Strengh:AC 250V/(50/60Hz for 1minute) ,
Electrical life:50000cycles
Environment Temp: -20℃-70℃
Operation Force :180/250(30gf)
Seal temperature:260℃-280℃

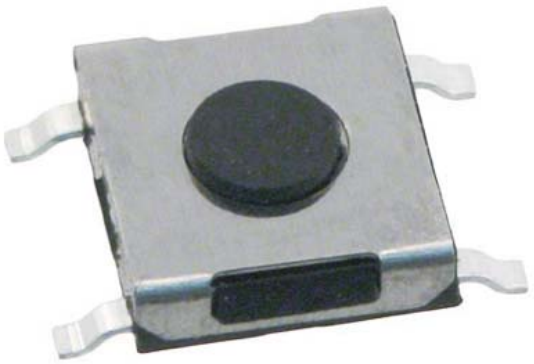

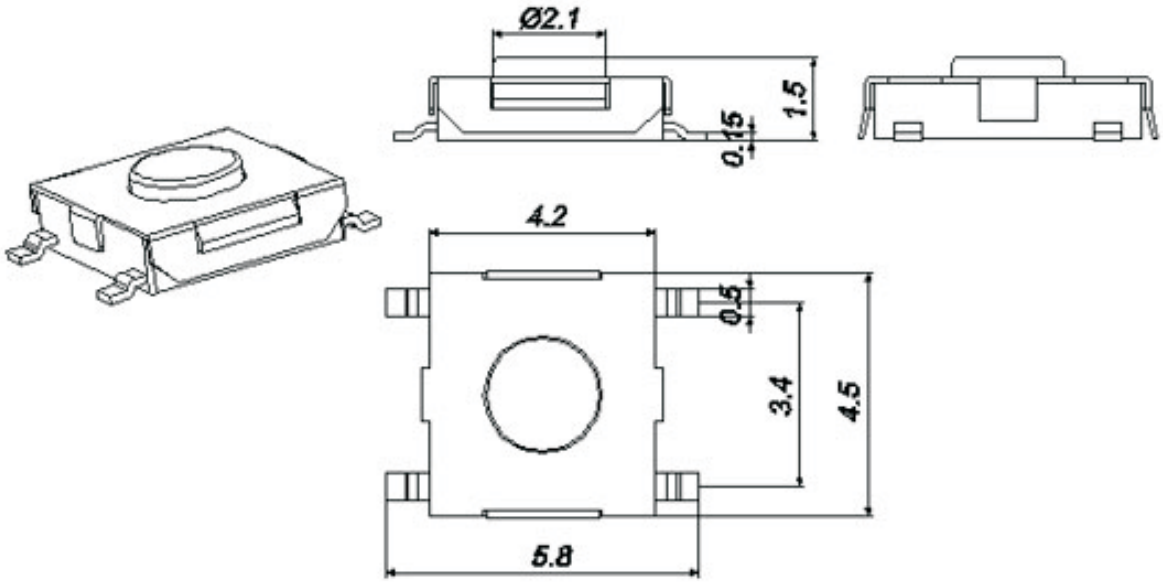

ORDER INFORMATION

KLS7-TS4470-180-B
(1) (2)

(1)-Operating Force :180~250g

(2)-Packing: B=Bulk T=Tape

Tact Switch Series

VII

KLS7-TS4501 4.5x4.5mm Tact Switch Series

ELECTRICAL

1.Rating: 50mA 12VDC
2.Contact Resistance : 50mΩ max(initial)
3.Insulation Resistance: 100MΩ(minDC 250V)
4.Dielectric Strength : AC250V(50/60Hz for 1minute)
5.Electrically Life: 100000cycles
6.Environment temperature:-20°C~+70°C
7.Operating Force: 180/250(±30gf)
8.Seal temperature:260°C~ 280°C



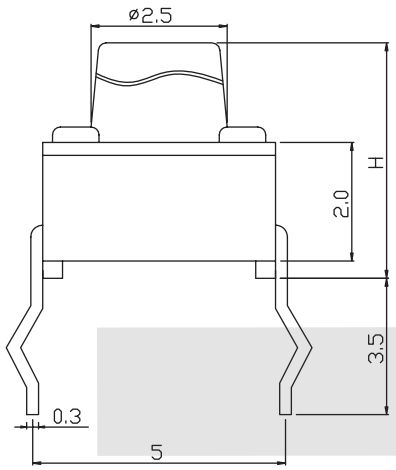

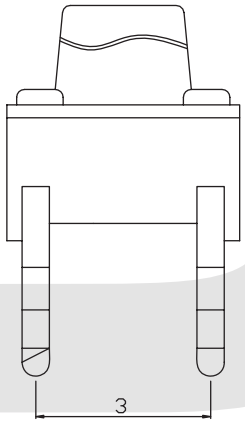

H
3.8
4.8
7.0
8.5

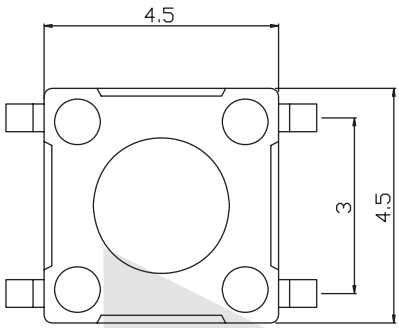

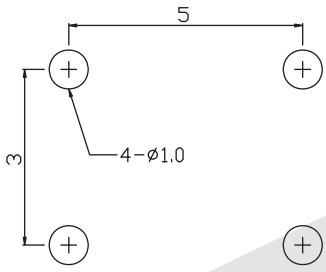

PCB LAYOUT

ORDER INFORMATION

KLS7-TS4501 - 4.3 - 180 - B

Series No.

Hight: 3.8mm/4.8mm/ 7.0mm/8.5mm

Packing: B=Bulk T=Tape

Operating Force :180~250gf

Tact Switch Series

KLS7-TS4503 4.50 x 4.50mm Tact Switch Series

ELECTRICAL

1.Rating: 20mA 12VDC
2.Contact Resistance : 50mΩ Max.
3.Insulation Resistance: 100MΩ Min.
4.Dielectric Strength : AC250V(50/60Hz for 1minute)
5.Electrically Life: 100, 000cycles
6.Environment temperature:-25°C~+70°C
7.Operating Force: 180~250±30gf
8.Seal temperature:260°C~ 280°C



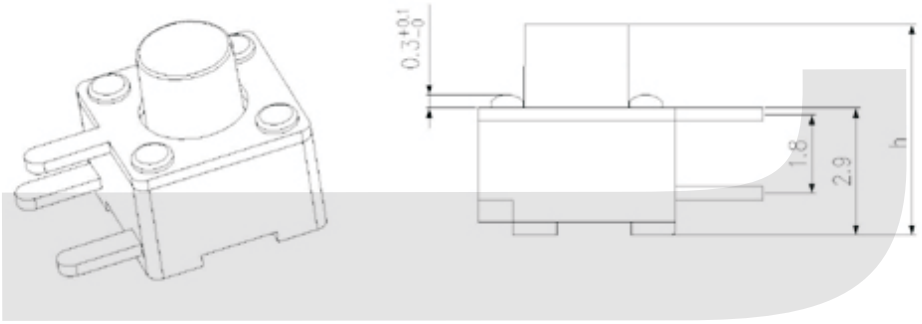

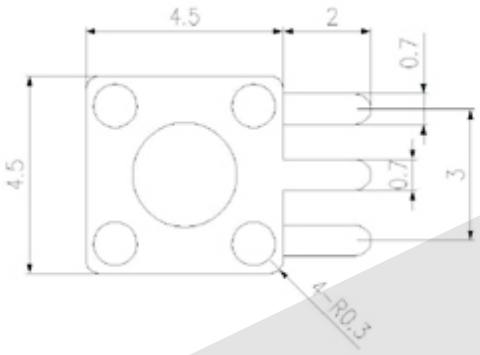

ORDER INFORMATION

KLS7-TS4503 - 3.8 -180

Series No.

Operating Force :180±30gf
Hight: 3.8mm/4.8mm/7.0mm/8.5mm

Tact Switch Series

VII

KLS7-TS4502 4.5x4.5 Tact Switch Series

ELECTRICAL

1.Rating: 50mA 12VDC
2.Contact Resistance : 50mΩ max(initial)
3.Insulation Resistance: 100MΩ(minDC 250V)
4.Dielectric Strength : AC250V(50/60Hz for 1minute)
5.Electrically Life: 100000cycles
6.Environment temperature:-20°C~+70°C
7.Operating Force: 180/250(±30gf)
8.Seal temperature:260°C~ 280°C



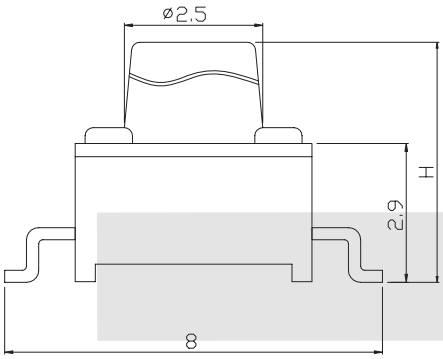

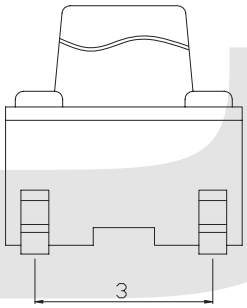

H
3.8
4.8
7.0
8.5

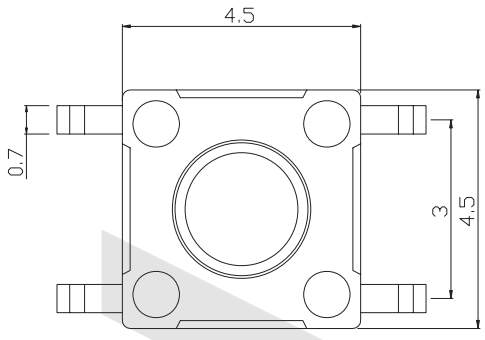

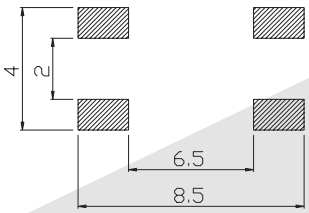

PCB LAYOUT

ORDER INFORMATION

KLS7-TS4502 - H1 - 180 -B

Series No.
Hight: 3.8mm/4.8mm/7.0mm/8.5mm

Packing: B=Bulk T=Tape
Operating Force :180~250gf

Tact Switch Series

KLS7-TS6601 6x6 Tact Switch Series

ELECTRICAL

1.Rating: 50mA 12VDC
2.Contact Resistance : 50mΩ max(initial)
3.Insulation Resistance: 100MΩ(minDC 250V)
4.Dielectric Strength : AC250V(50/60Hz for 1minute)
5.Electrically Life: 100000cycles
6.Environment temperature:-20°C~+70°C
7.Operating Force: 180/250(±30gf)
8.Seal temperature:260°C~ 280°C



Dimension (unit: mm)

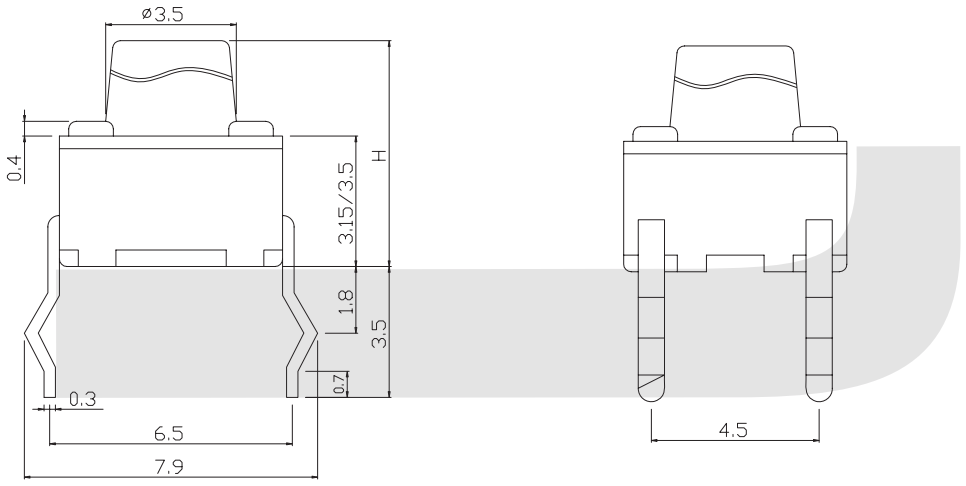

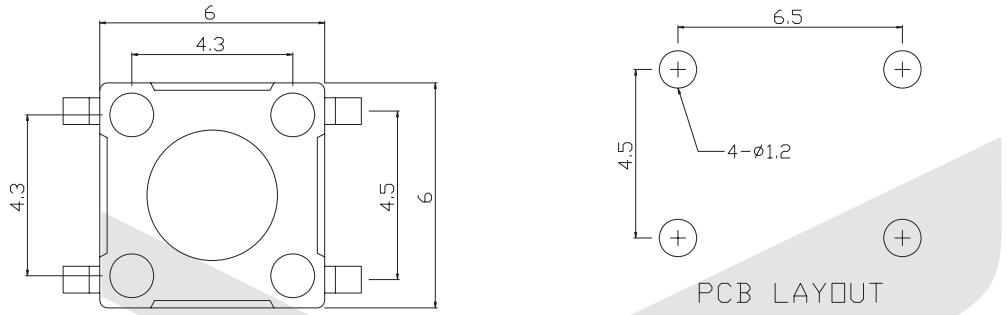

H
4.3
5.0
7.0
7.3
7.5
8.0
9.5
11.0
12.0
13.0
15.0
17.0
18.0
20.0
22.0
26.0

ORDER INFORMATION

KLS7-TS6601 - 4.3 -180

- Series No.
- Hight: 4.3mm/5.0mm/7.0mm/7.3mm/ 7.5mm/8.0mm/9.5mm/11.0mm/ 12.0mm/13.0mm/15.0mm/17.0mm/ 18.0mm/20mm/22mm/26mm
- Operating Force :180~250gf

Tact Switch Series

VII

KLS7-TS6602 6x6mm Tact Switch Series

ELECTRICAL

1.Rating: 50mA 12VDC
2.Contact Resistance : 50mΩ max(initial)
3.Insulation Resistance: 100MΩ(minDC 250V)
4.Dielectric Strength : AC250V(50/60Hz for 1minute)
5.Electrically Life: 100000cycles
6.Environment temperature:-20°C~+70°C
7.Operating Force: 180/250(±30gf)
8.Seal temperature:260°C~ 280°C



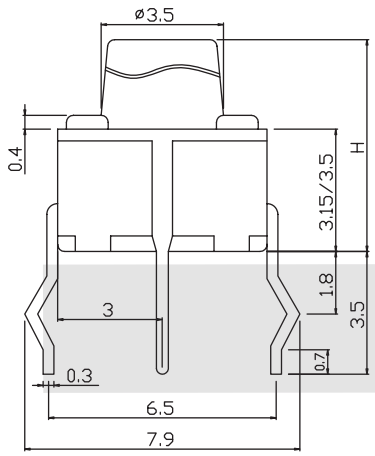

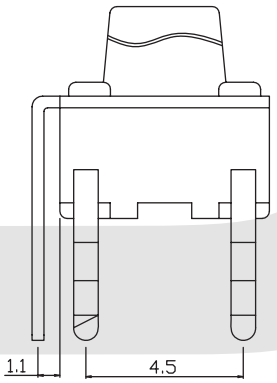

H
4.3
5.0
6.0
7.0
8.0

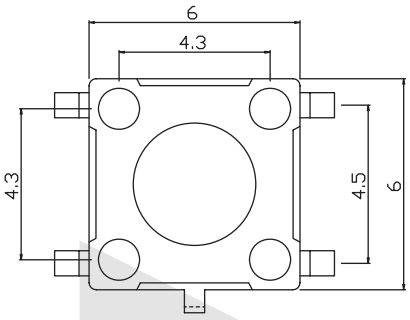

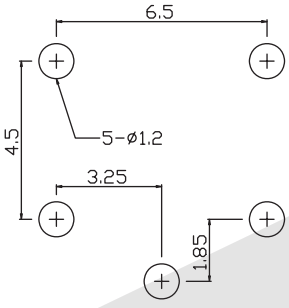

PCB LAYOUT

ORDER INFORMATION

KLS7-TS6602 - 4.3 - 180

Series No.

Hight: 4.3mm/5.0mm/6.0mm/7.0mm/8.0mm

Operating Force :180~250gf

Tact Switch Series

KLS7-TS6603 6x6 Tact Switch Series

ELECTRICAL

1.Rating: 50mA 12VDC
2.Contact Resistance : 50mΩ max(initial)
3.Insulation Resistance: 100MΩ(minDC 250V)
4.Dielectric Strength : AC250V(50/60Hz for 1minute)
5.Electrically Life: 100000cycles
6.Environment temperature:-20°C~+70°C
7.Operating Force: 180/250(±30gf)
8.Seal temperature:260°C~ 280°C



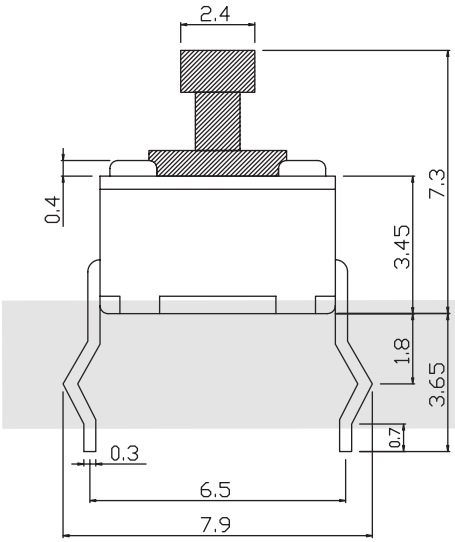

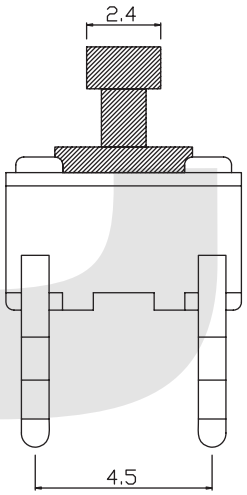

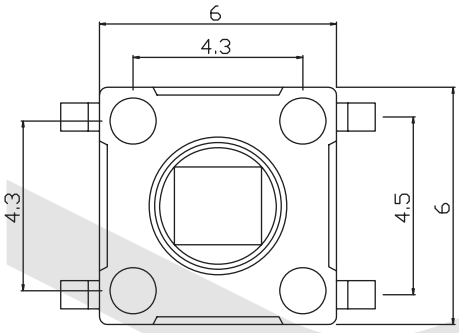

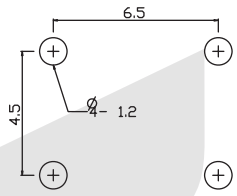

PCB LAYOUT

ORDER INFORMATION

KLS7-TS6603 - 180 - B

Series No.

Handle Color: B-Black Y-Yellow
Operating Force :180~250gf

Tact Switch Series

KLS7-TS6604 6x6 Tact Switch Series

ELECTRICAL

1.Rating: 50mA 12VDC
2.Contact Resistance : 50mΩ max(initial)
3.Insulation Resistance: 100MΩ(minDC 250V)
4.Dielectric Strength : AC250V(50/60Hz for 1minute)
5.Electrically Life: 100000cycles
6.Environment temperature:-20°C~+70°C
7.Operating Force: 180/250(±30gf)
8.Seal temperature:260°C~ 280°C



Dimension (unit: mm)

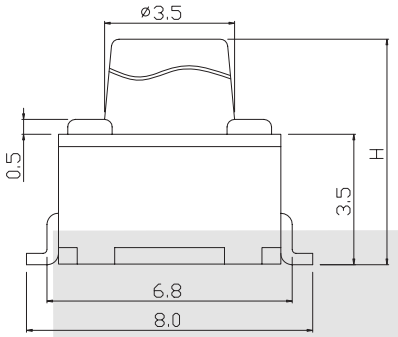

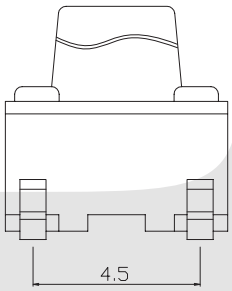

H
4.3
5.0
6.0
7.0
8.0

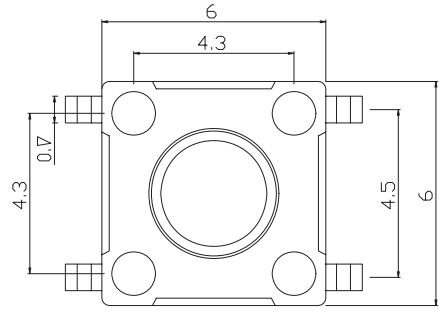

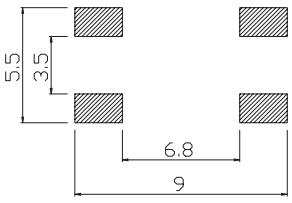

PCB LAYOUT

ORDER INFORMATION

KLS7-TS6604 -4.3- 180- T

Series No.
Hight: 4.3mm/5.0mm/6.0mm/ 7.0mm/8. 0mm
Operating Force :180~250gf
Packing: B=Bulk T=Tape

Tact Switch Series

VII

KLS7-TS6604B 6x6 Tact Switch Series

ELECTRICAL

1.Rating: 50mA 12VDC
2.Contact Resistance : 50mΩ max(initial)
3.Insulation Resistance: 100MΩ(minDC 250V)
4.Dielectric Strength : AC250V(50/60Hz for 1minute)
5.Electrically Life: 100000cycles
6.Environment temperature:-20°C~+70°C
7.Operating Force: 180/250(±30gf)
8.Seal temperature:260°C~ 280°C



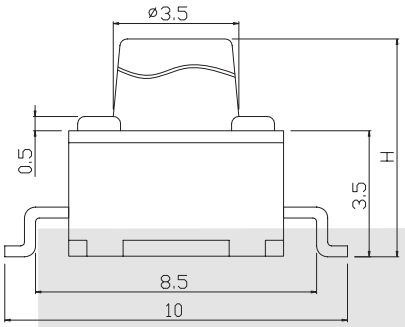

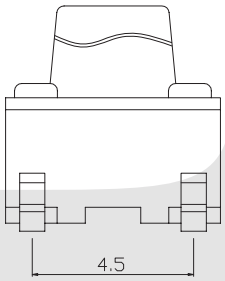

H
4.3
5.0
6.0
7.0
8.0

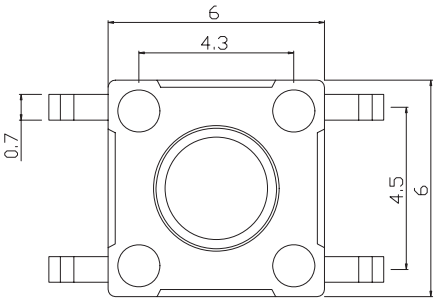

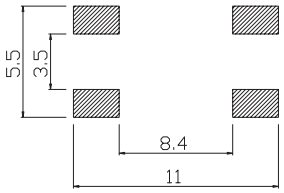

PCB LAYOUT

ORDER INFORMATION

KLS7-TS6604B -4.3- 180- T

- Series No.
- Hight: 4.3mm/5.0mm/6.0mm/ 7.0mm/8. 0mm
- Operating Force :180~250gf
- Packing: B=Bulk T=Tape

Tact Switch Series

KLS7-TS6605 6x6 Tact Switch Series

ELECTRICAL
1.Rating: 50mA 12VDC
2.Contact Resistance : 50mΩ max(initial)
3.Insulation Resistance: 100MΩ(minDC 250V)
4.Dielectric Strength : AC250V(50/60Hz for 1minute)
5.Electrically Life: 100000cycles
6.Environment temperature:-20°C~+70°C
7.Operating Force: 180/250(±30gf)
8.Seal temperature:260°C~ 280°C



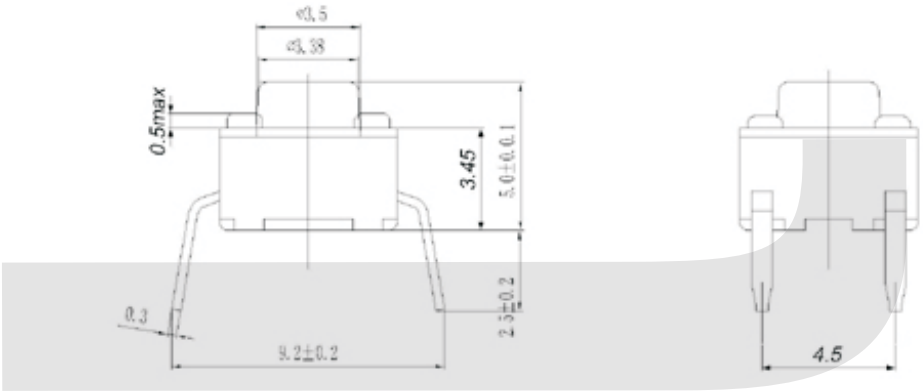

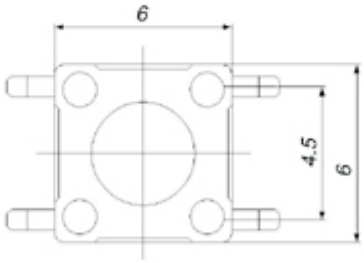

ORDER INFORMATION

KLS7-TS6605 - H1 - 180 -B

- Part Number
- Hight: H1=4.3mm H2=5.0mm H3=6.0mm H4=7.0mm H5=8.0mm H6=9.5mm
- Operating Force :180~250gf
- Packing: B-Bulk

Tact Switch Series

KLS7-TS6606 6x6 Tact Switch Series

ELECTRICAL

1.Rating: 50mA 12VDC
2.Contact Resistance : 50mΩ max(initial)
3.Insulation Resistance: 100MΩ(minDC 250V)
4.Dielectric Strength : AC250V(50/60Hz for 1minute)
5.Electrically Life: 100000cycles
6.Environment temperature:-20°C~+70°C
7.Operating Force: 180/250(±30gf)
8.Seal temperature:260°C~ 280°C



Dimension (unit: mm)

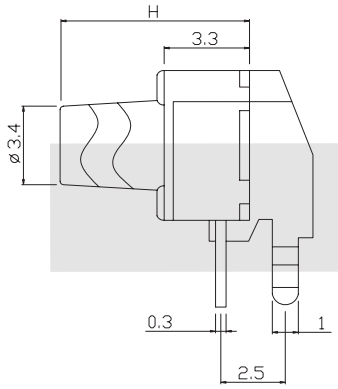

H
4.3
5.0
6.0
7.0
8.0
13.0

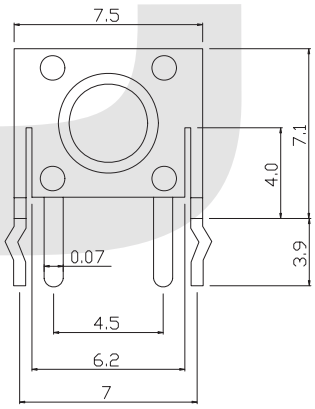

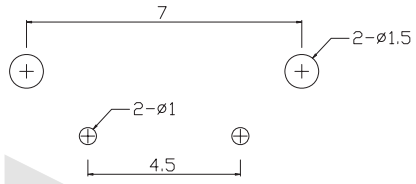

PCB LAYOUT

ORDER INFORMATION

KLS7-TS6606 -4.3-180

Series No.
Hight: 4.3mm/5.0mm/6.0mm/ 7.0mm/8.0mm/13.0mm
Operating Force :180~250gf

Tact Switch Series

KLS7-TS6606A-H2-160gf 6x6 Long life Tact switch Series

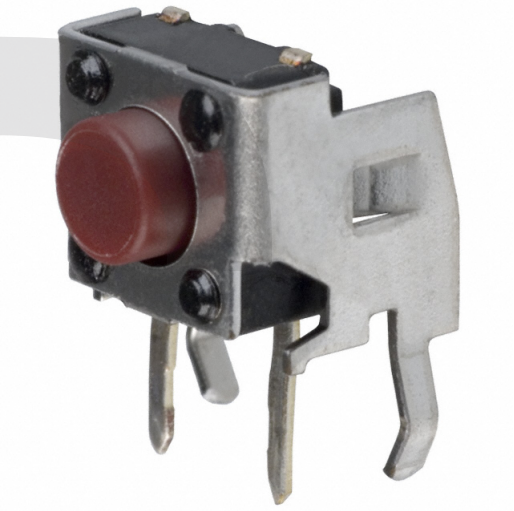

ELECTRICAL

1.Rating: 50mA 12VDC
2.Contact Resistance:100 mΩ max
3.Insulation Resistance:100MΩ min DC250V
4.Dielectric Strength : AC250V(50/60Hz for 1minute)
5.Electrically Life:1000000cycles
6.Environment temperature:-30°C~+80°C
7.Operating Force: 160(±30gf)
8.Seal temperature:260°C~ 280°C

Materials

Cover :Stainless steel or spcc
Base:UL94V-0 Nylon Thermoplastic (Black)
Stem:UL94V-0 Nylon Thermoplastic
Contact Disc :Phosphor bronze with silver cladding
Terminal:Brass with silver cladding

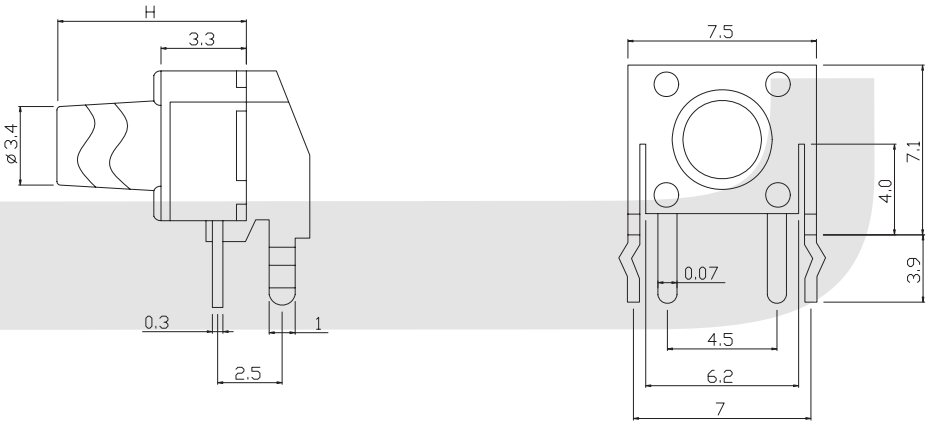

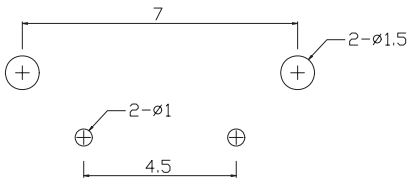

PCB LAYOUT

H1=4.3mm
H2=5.0mm
H3=7.0mm
H4=7.5mm
H5=9.5mm
H6=13mm

ORDER INFORMATION

KLS7-TS6606A - H2 - 160

Part Number

Hight: H1=4.3mm H2=5.0mm H3=7.0mm
H4=7.5mm H5=9.5mm H6=13mm

Operating Force :160~250gf

Tact Switch Series

KLS7-TS6607 6x6mm Tact Switch Series

ELECTRICAL

1.Rating: 50mA 12VDC
2.Contact Resistance : 50mΩ max(initial)
3.Insulation Resistance: 100MΩ(minDC 250V)
4.Dielectric Strength : AC250V(50/60Hz for 1minute)
5.Electrically Life: 100000cycles
6.Environment temperature:-20°C~+70°C
7.Operating Force: 180/250(±30gf)
8.Seal temperature:260°C~ 280°C



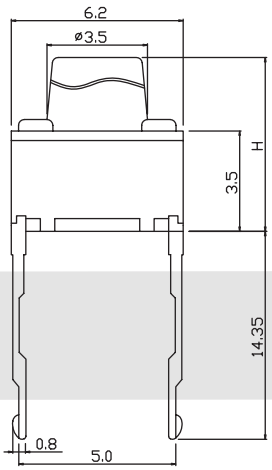

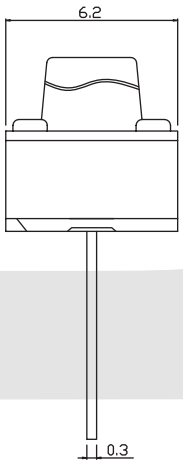

H
4.3
5.0
6.0
7.0
8.0

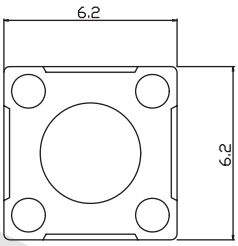

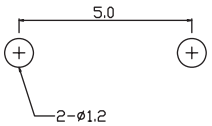

PCB LAYOUT

ORDER INFORMATION

KLS7-TS6607 - 4.3 - 180 - B

Series No.
Hight: 4.3mm/5.0mm/6.0mm/ 7.0mm/8.0mm
Packing: B=Bulk T=Tape
Operating Force :180~250gf

KLS electronic
www.cnkls.com

Tact Switch Series

KLS7-TS6608 6x6mm Tact Switch Series

ELECTRICAL

1.Rating: 50mA 12VDC
2.Contact Resistance : 50mΩ max(initial)
3.Insulation Resistance: 100MΩ(minDC 250V)
4.Dielectric Strength : AC250V(50/60Hz for 1minute)
5.Electrically Life: 100000cycles
6.Environment temperature:-20°C~+70°C
7.Operating Force: 180/250(±30gf)
8.Seal temperature:260°C~ 280°C

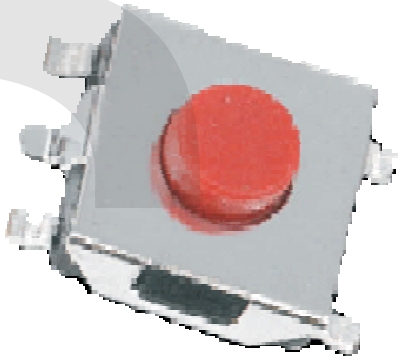

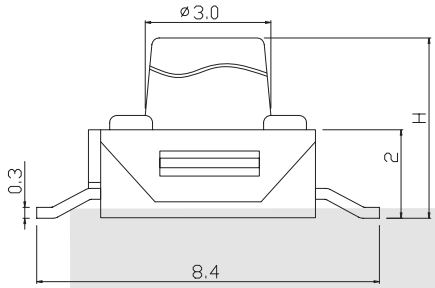

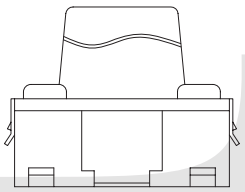

H
2.5
2.7
3.1
3.7
5.1

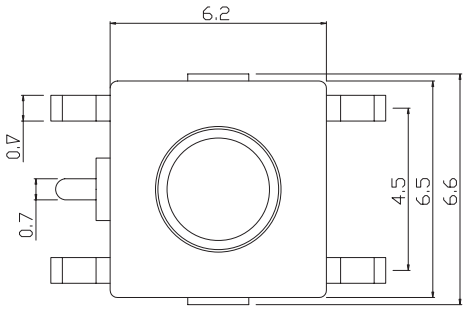

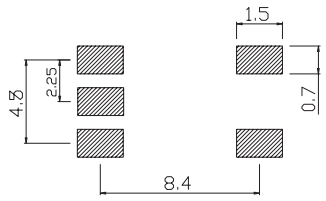

PCB LAYOUT

ORDER INFORMATION

KLS7-TS6608 - 2.5 - 180 - B

Series No.
Hight: 2.5mm/2.7mm/3.1mm/ 3.7mm/5.1mm
Operating Force :180~250gf
Packing: B=Bulk T=Tape

Tact Switch Series

VII

KLS7-TS6609 6x6mm Tact Switch Series

ELECTRICAL

1.Rating: 50mA 12VDC
2.Contact Resistance : 50mΩ max(initial)
3.Insulation Resistance: 100MΩ(minDC 250V)
4.Dielectric Strength : AC250V(50/60Hz for 1minute)
5.Electrically Life: 100000cycles
6.Environment temperature:-20°C~+70°C
7.Operating Force: 180/250(±30gf)
8.Seal temperature:260°C~ 280°C



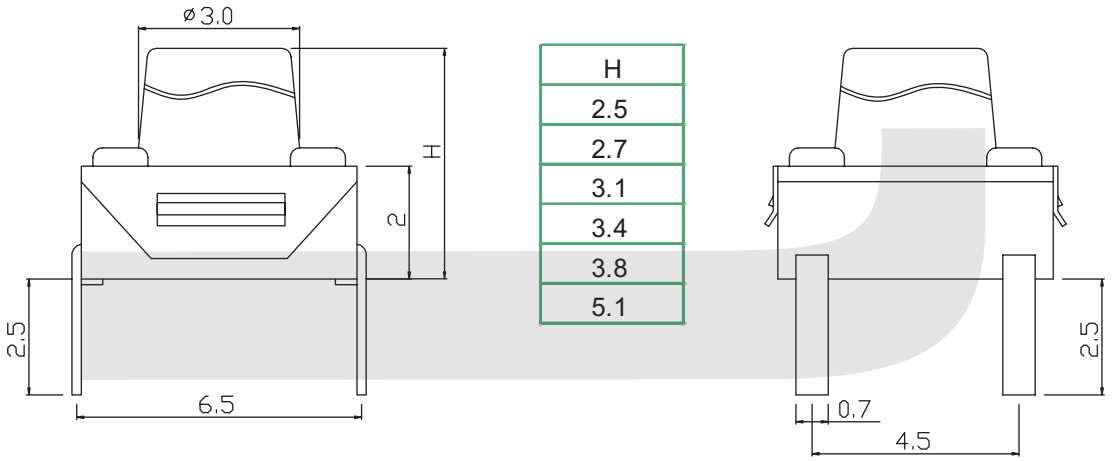

H
2.5
2.7
3.1
3.4
3.8
5.1

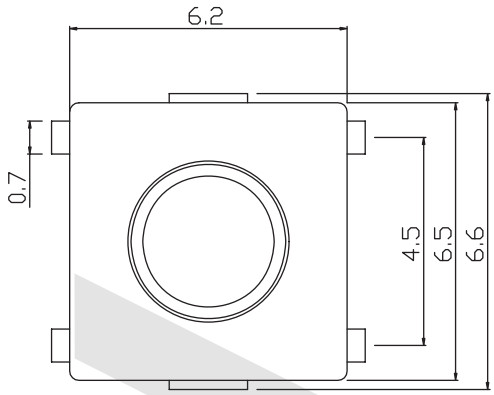

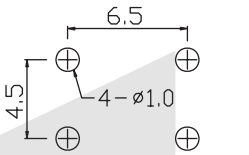

PCB LAYOUT

ORDER INFORMATION

KLS7-TS6609 - 2.5 - 180

Series No.
Hight: 2.5mm/2.7mm/3.1mm/ 3.4mm/3.8mm/5.1mm
Operating Force :180~250gf

Tact Switch Series

KLS7-TS6611 6x6 Tact Switch Series

ELECTRICAL

1.Rating: 50mA 12VDC
2.Contact Resistance : 50mΩ max(initial)
3.Insulation Resistance: 100MΩ(minDC 250V)
4.Dielectric Strength : AC250V(50/60Hz for 1minute)
5.Electrically Life: 100000cycles
6.Environment temperature:-20°C~+70°C
7.Operating Force: 180/250(±30gf)
8.Seal temperature:260°C~ 280°C



H
1.5
1.7
1.9

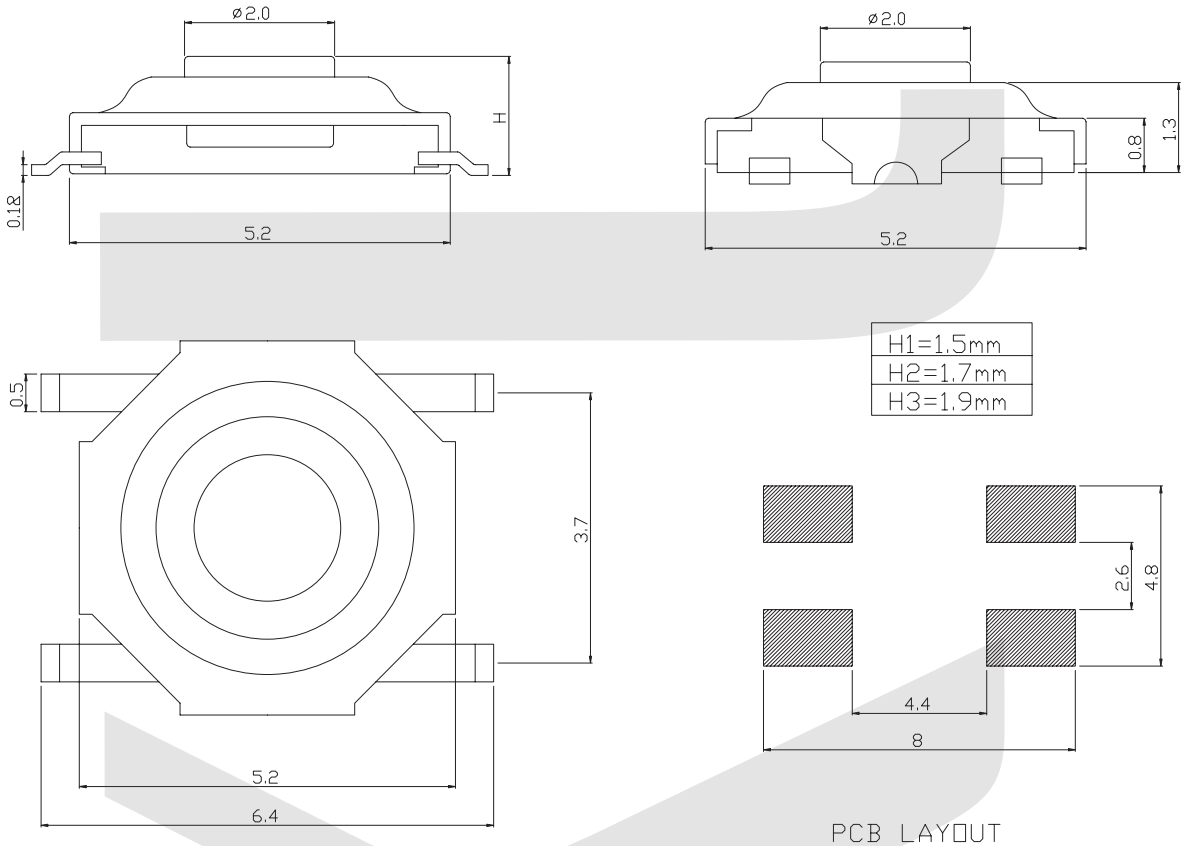

ORDER INFORMATION

KLS7-TS6611 - 1.5 - 180 -T

Series No.
Hight: 1.5mm/1.7mm/1.9mm

Packing: B-Bulk T-Tape
Operating Force :180~250gf

Tact Switch Series

KLS7-TS6611B 5.20 x 5.20mm Tact Switch Series

ELECTRICAL

1.Rating: 20mA 12VDC
2.Contact Resistance : 50mΩ Max.
3.Insulation Resistance: 100MΩ Min.
4.Dielectric Strength : AC250V(50/60Hz for 1minute)
5.Electrically Life: 100, 000cycles
6.Environment temperature:-25°C~+70°C
7.Operating Force: 180~250±30gf
8.Seal temperature:260°C~ 280°C



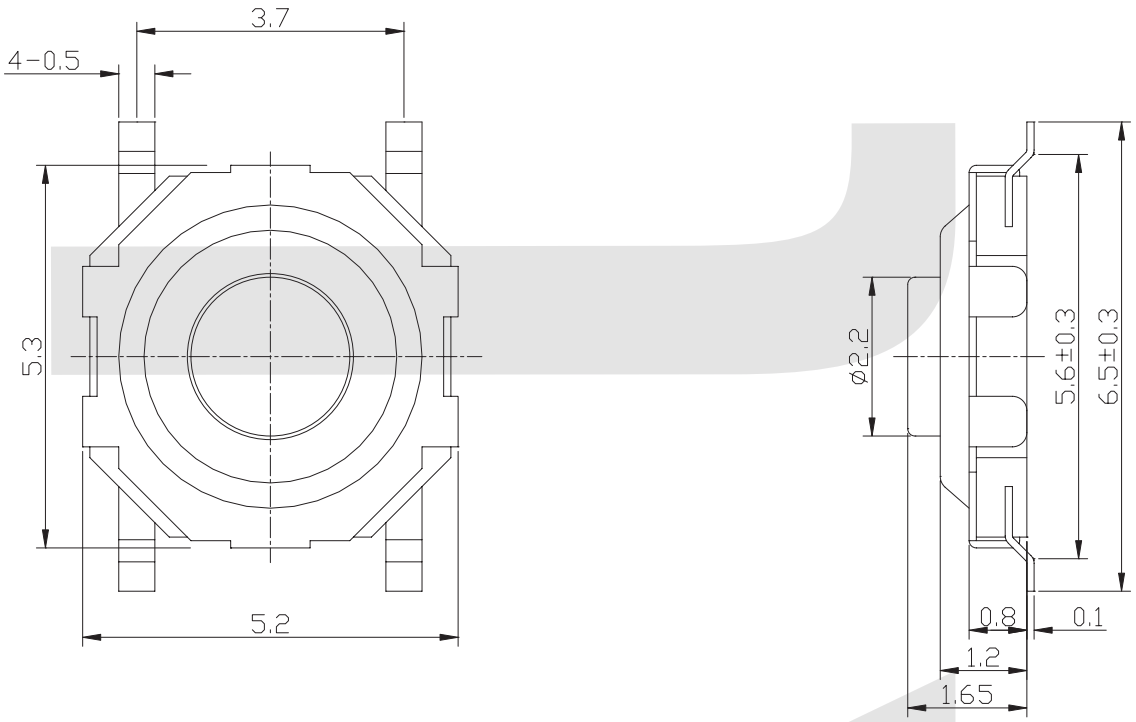

ORDER INFORMATION

KLS7-TS6611B - 180 -B

Series No.

Packing: B-Bulk T-Tape
Operating Force :180±30gf

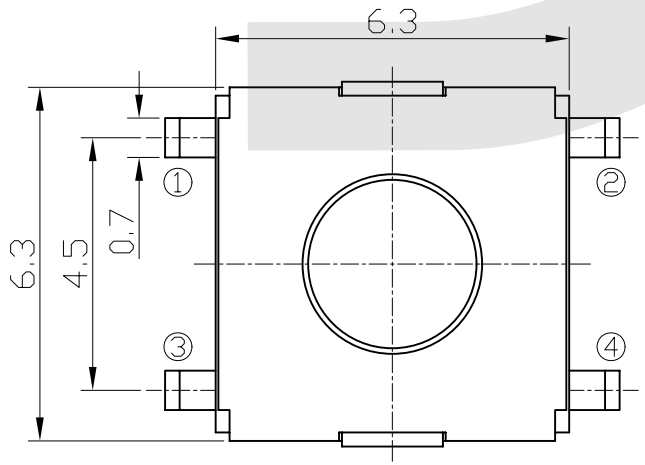

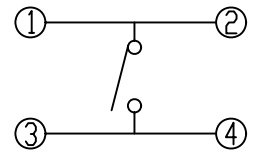

SCHEMATIC

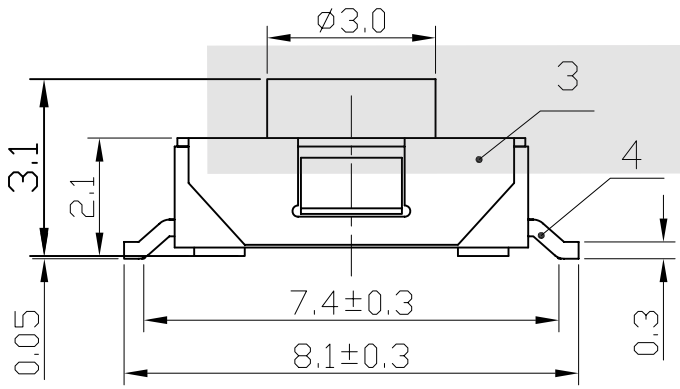

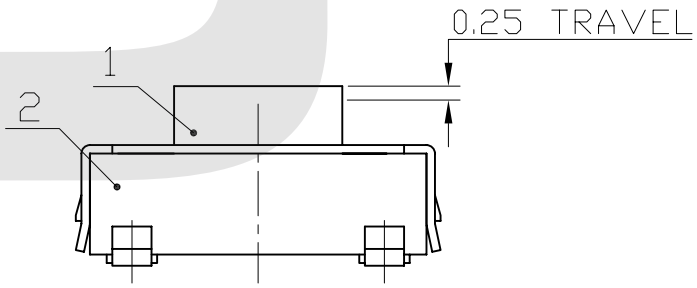

KLS ELECTRONIC CO.,LTD

KLS7-TS6612-H3.1

UNIT : MM	DWN.	陈 镇 铭	DATE	2010-04-10	TOLERANCE	ANGLE TOL	
SCALE : 6 : 1	CHK'D	侯 美 萍	DATE	2010-04-10	<=1.5mm ±0.1	±2°	
VERSION 01	APPD.	周 丽 琼	DATE	2010-04-10	> 1.5mm ±0.2		

NO.	PART NAME	MATERIAL	QTY.	FINISHING
5	CONTACT	PBS STRIP	1	Ag CLAD
4	TERMINAL	BRASS STRIP	4	Ag PLATED
3	COVER	SUS	1	Ag PLATED
2	CASE	NYLON	1	BLACK
1	KNOB	NYLON	1	BLACK

Tact Switch Series

KLS7-TS6613 6x6mm Tact Switch Series

ELECTRICAL

1.Rating: 50mA 12VDC
2.Contact Resistance : 50mΩ max(initial)
3.Insulation Resistance: 100MΩ(minDC 250V)
4.Dielectric Strength : AC250V(50/60Hz for 1minute)
5.Electrically Life: 100000cycles
6.Environment temperature:-20°C~+70°C
7.Operating Force: 180/250(±30gf)
8.Seal temperature:260°C~ 280°C



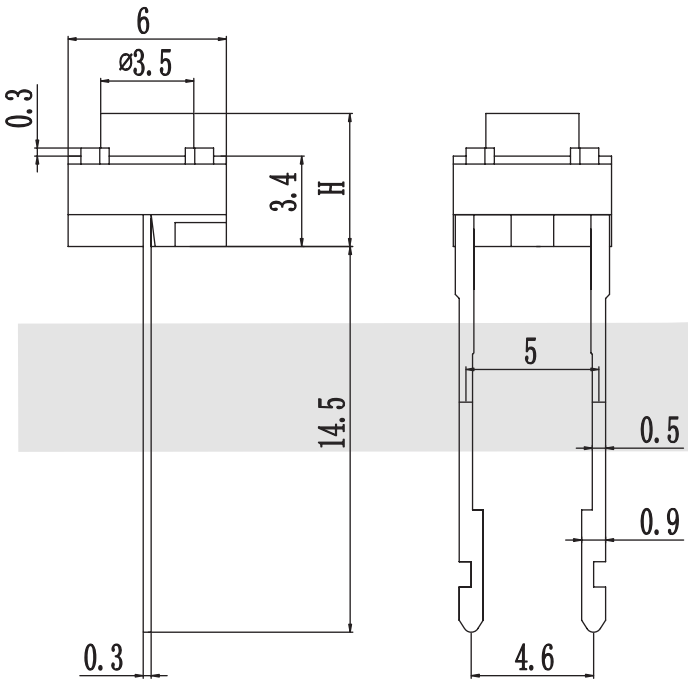

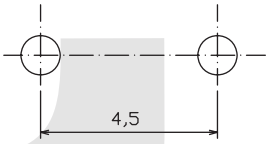

P.C.B layout

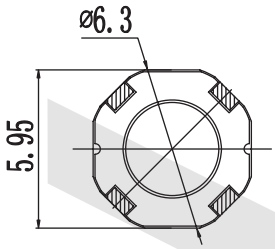

H
4.3
5.0

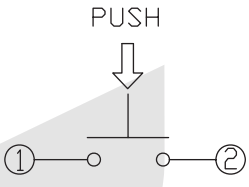

SCHEMATIC

ORDER INFORMATION

KLS7-TS6613 - 4.3 - 180 - B

Series No.
Hight: 4.3mm/5.0mm
Packing: B=Bulk T=Tape
Operating Force :180~250gf

Tact Switch Series

VII

KLS7-TS6615 6x6 Tact Switch Series

ELECTRICAL
1.Rating: 50mA 12VDC
2.Contact Resistance : 50mΩ max(initial)
3.Insulation Resistance: 100MΩ(minDC 250V)
4.Dielectric Strength : AC250V(50/60Hz for 1minute)
5.Electrically Life: 100000cycles
6.Environment temperature:-20°C~+70°C
7.Operating Force: 180/250(±30gf)
8.Seal temperature:260°C~ 280°C



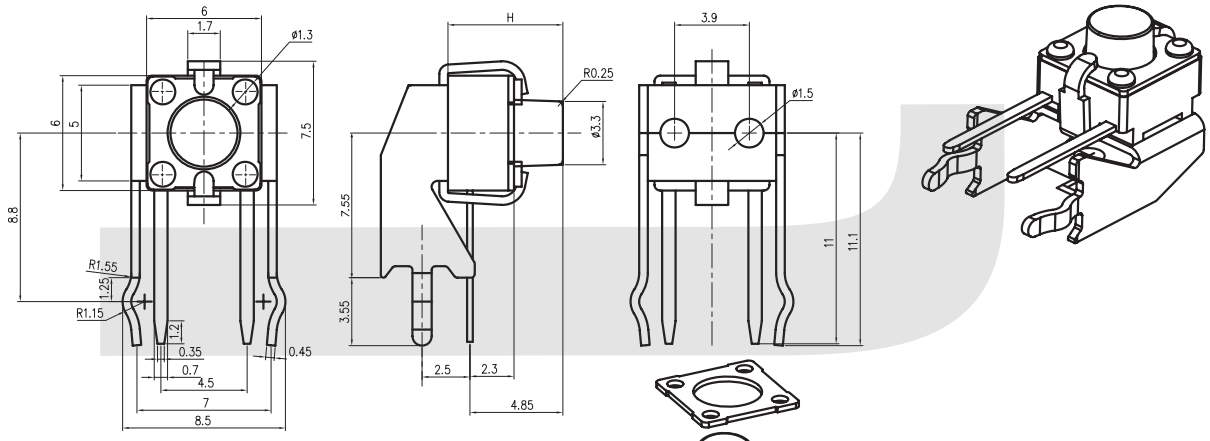

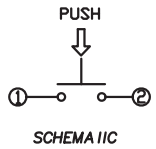

SCHEMA IIC

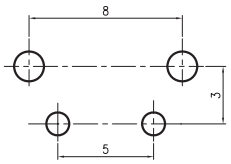

Recommended P.C.B layout

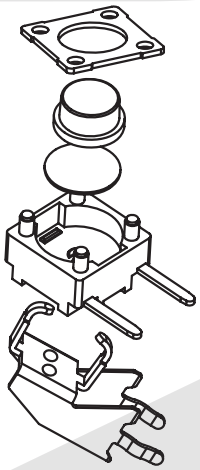

ORDER INFORMATION

KLS7-TS6615 - H1 - 180 -B

- Part Number
- Hight: H1=4.3mm H2=5.0mm H3=6.0mm H4=7.0mm
- Operating Force :180~250gf
- Packing: B-Bulk

Tact Switch Series

VII

KLS7-TS6616 6x6 Tact Switch Series

ELECTRICAL

1.Rating: 50mA 12VDC
2.Contact Resistance : 50mΩ max(initial)
3.Insulation Resistance: 100MΩ(minDC 250V)
4.Dielectric Strength : AC250V(50/60Hz for 1minute)
5.Electrically Life: 100000cycles
6.Environment temperature:-20°C~+70°C
7.Operating Force: 180/250(±30gf)
8.Seal temperature:260°C~ 280°C

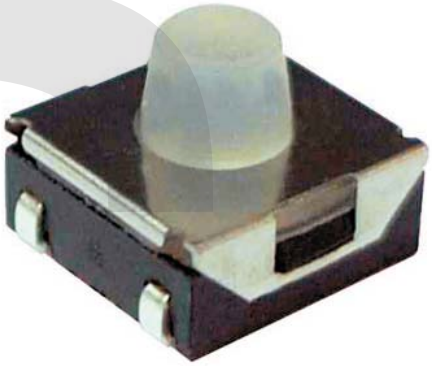

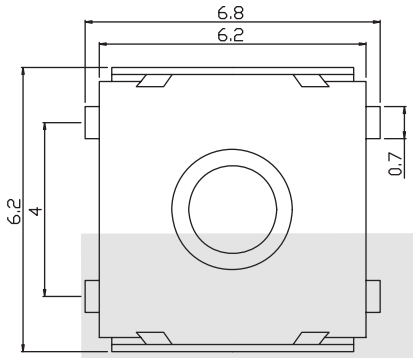

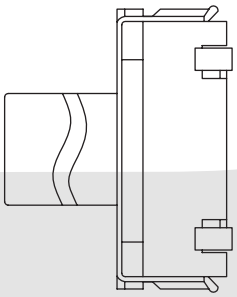

H	A
3.4	2.9
5.1	2.5

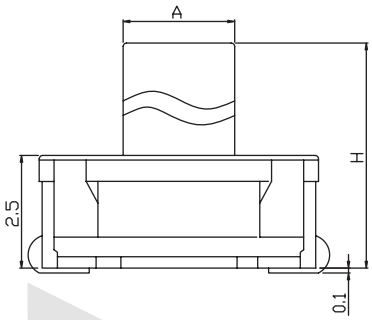

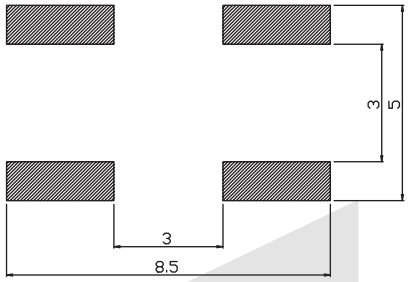

PCB LAYOUT

ORDER INFORMATION

KLS7-TS6612 - 3.4 - 180 - B

Series No.
Hight: 3.4mm/5.1mm
Packing: B=Bulk T=Tape
Operating Force :180~250gf

Tact Switch Series

KLS7-TS6650 6x6mm Tact Switch Series

ELECTRICAL

1.Rating: 20mA 12VDC
2.Contact Resistance : 100mΩ Max.
3.Insulation Resistance: 100MΩ Min.
4.Dielectric Strength : AC250V(50/60Hz for 1minute)
5.Electrically Life: 100, 000cycles
6.Environment temperature:-20°C~+70°C
7.Operating Force: 180/250(±30gf)
8.Seal temperature:260°C~ 280°C

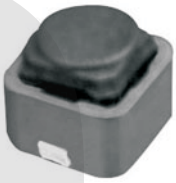

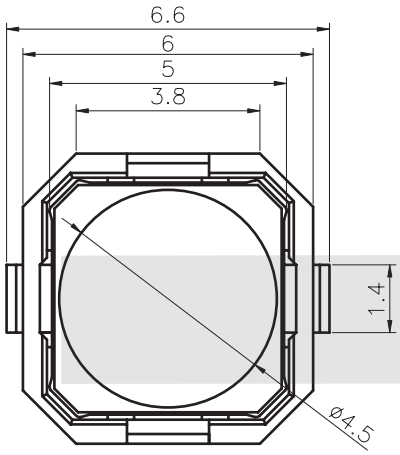

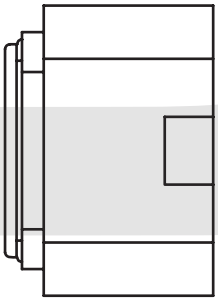

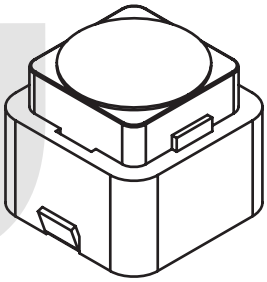

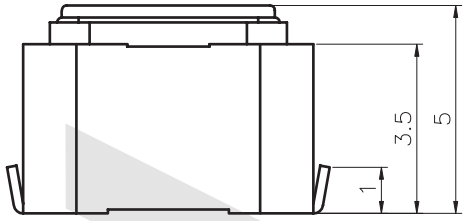

P.C.B Land Pattern

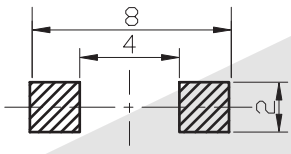

Circuit Diagram



ORDER INFORMATION

KLS7-TS6650 - 250 -T

Series No.
Packing: B-Bulk T-Tape
Operating Force :180~250gf

Tact Switch Series

KLS7-TS6651 6x6 Tact Switch Series

ELECTRICAL
1.Rating: 50mA 12VDC
2.Contact Resistance : 50mΩ max(initial)
3.Insulation Resistance: 100MΩ(minDC 250V)
4.Dielectric Strength : AC250V(50/60Hz for 1minute)
5.Electrically Life: 100000cycles
6.Environment temperature:-20°C~+70°C
7.Operating Force: 180/250(±30gf)
8.Seal temperature:260°C~ 280°C



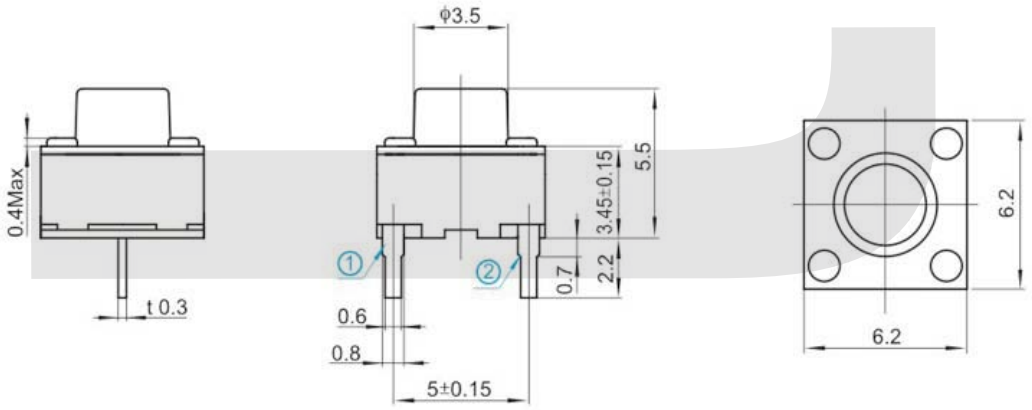

ORDER INFORMATION

KLS7-TS6651 - H1 - 180 -B

- KLS7-TS6651 — Part Number
- H1 — Hight: H1=4.3mm H2=5.0mm H3=6.0mm H4=7.0mm H5=7.5mm
- 180 — Operating Force :180~250gf
- B — Packing: B-Bulk

Tact Switch Series

KLS7-TS6652 6x6 Tact Switch Series

ELECTRICAL
1.Rating: 50mA 12VDC
2.Contact Resistance : 50mΩ max(initial)
3.Insulation Resistance: 100MΩ(minDC 250V)
4.Dielectric Strength : AC250V(50/60Hz for 1minute)
5.Electrically Life: 100000cycles
6.Environment temperature:-20°C~+70°C
7.Operating Force: 180/250(±30gf)
8.Seal temperature:260°C~ 280°C



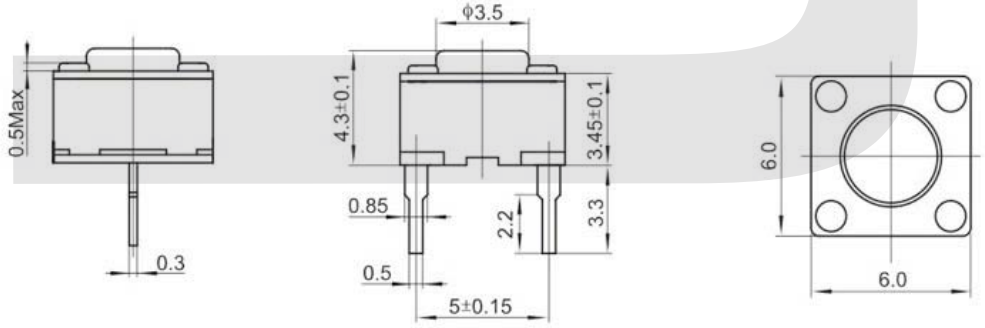

ORDER INFORMATION

KLS7-TS6652 - H1 - 180 -B

- Part Number
- Hight: H1=4.3mm H2=5.0mm H3=6.0mm H4=7.0mm H5=7.5mm
- Operating Force :180~250gf
- Packing: B-Bulk

Tact Switch Series

KLS7-TS6653 6x6 Tact Switch Series

ELECTRICAL
1.Rating: 50mA 12VDC
2.Contact Resistance : 50mΩ max(initial)
3.Insulation Resistance: 100MΩ(minDC 250V)
4.Dielectric Strength : AC250V(50/60Hz for 1minute)
5.Electrically Life: 100000cycles
6.Environment temperature:-20°C~+70°C
7.Operating Force: 180/250(±30gf)
8.Seal temperature:260°C~ 280°C



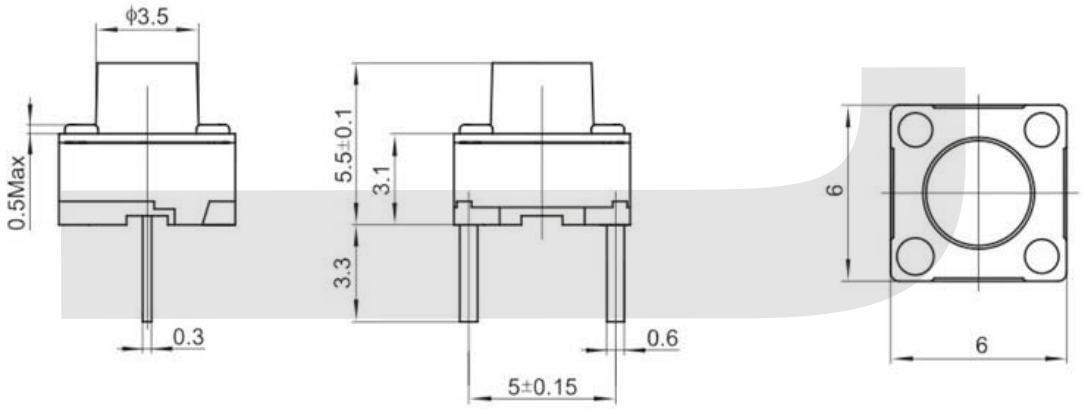

ORDER INFORMATION

KLS7-TS6653 - H1 - 180 -B

Part Number

Packing: B-Bulk

Operating Force :180~250gf

Hight: H1=4.3mm H2=5.0mm H3=6.0mm
H4=7.0mm H5=7.5mm

Tact Switch Series

KLS7-TS6654 6x6 Tact Switch Series

ELECTRICAL
1.Rating: 50mA 12VDC
2.Contact Resistance : 50mΩ max(initial)
3.Insulation Resistance: 100MΩ(minDC 250V)
4.Dielectric Strength : AC250V(50/60Hz for 1minute)
5.Electrically Life: 100000cycles
6.Environment temperature:-20°C~+70°C
7.Operating Force: 180/250(±30gf)
8.Seal temperature:260°C~ 280°C



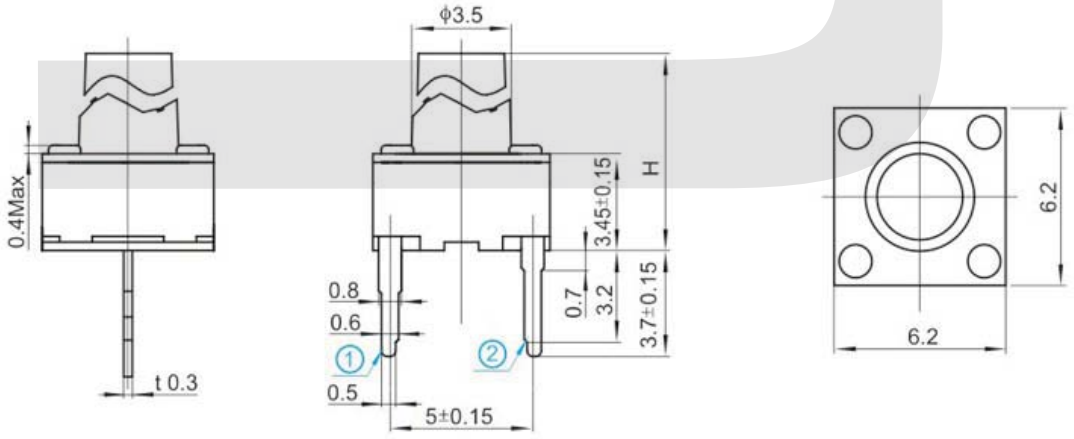

ORDER INFORMATION

KLS7-TS6654 - H1 - 180 -B

- Part Number
- Hight: H1=4.3mm H2=5.0mm H3=6.0mm H4=7.0mm H5=7.5mm
- Operating Force :180~250gf
- Packing: B-Bulk

Tact Switch Series

KLS7-TS6657 6x6 Tact Switch Series

ELECTRICAL
1.Rating: 50mA 12VDC
2.Contact Resistance : 50mΩ max(initial)
3.Insulation Resistance: 100MΩ(minDC 250V)
4.Dielectric Strength : AC250V(50/60Hz for 1minute)
5.Electrically Life: 100000cycles
6.Environment temperature:-20°C~+70°C
7.Operating Force: 180/250(±30gf)
8.Seal temperature:260°C~ 280°C

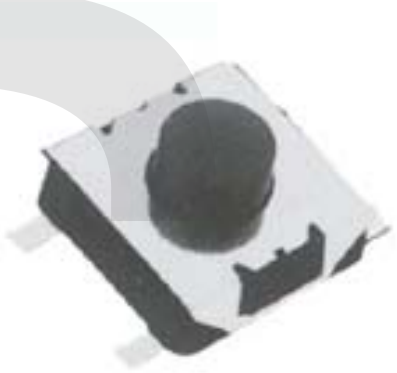

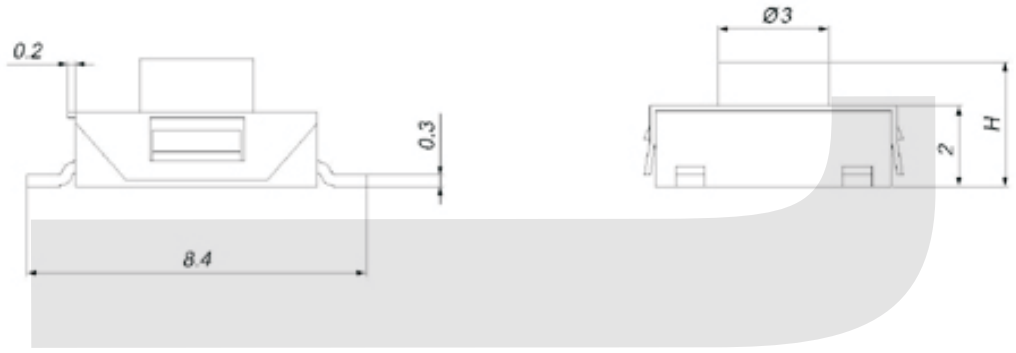

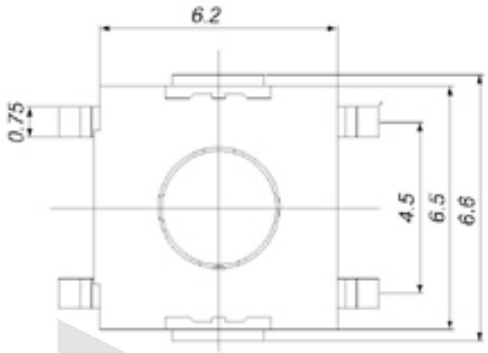

ORDER INFORMATION

KLS7-TS6657 - H1 - 180 -B

- Part Number
- Hight: H1=2.5mm H2=2.7mm H3=3.1mm H4=3.4mm H5=3.7mm H6=5.1mm H7=5.5mm
- Operating Force :180~250gf
- Packing: B-Bulk

Tact Switch Series

KLS7-TS6660 6x6 Tact Switch Series

ELECTRICAL
1.Rating: 50mA 12VDC
2.Contact Resistance : 50mΩ max(initial)
3.Insulation Resistance: 100MΩ(minDC 250V)
4.Dielectric Strength : AC250V(50/60Hz for 1minute)
5.Electrically Life: 100000cycles
6.Environment temperature:-20°C~+70°C
7.Operating Force: 180/250(±30gf)
8.Seal temperature:260°C~ 280°C

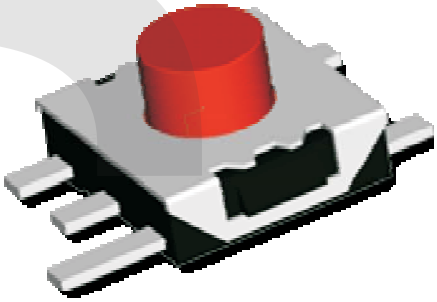

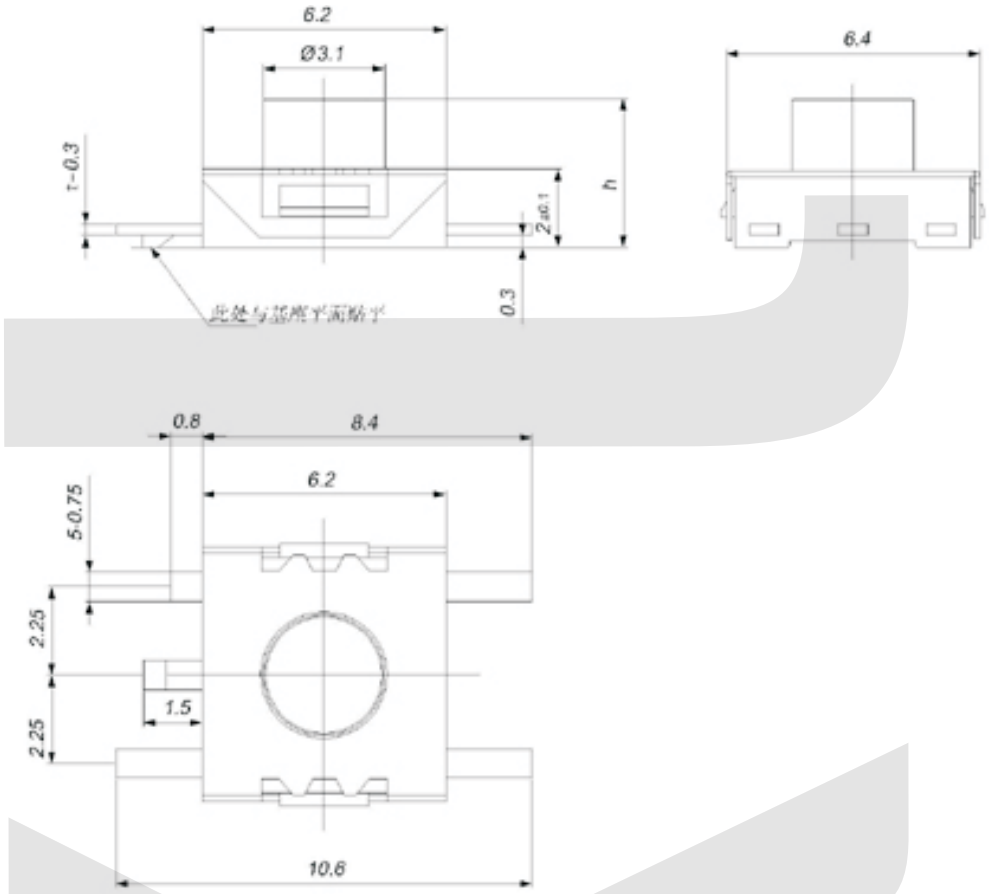

ORDER INFORMATION

KLS7-TS6660 - H1 - 180 -B

- Part Number
- Hight: H1=2.5mm H2=3.8mm H3=4.3mm
- Operating Force :180~250gf
- Packing: B-Bulk T-Tape

Tact Switch Series

KLS7-TS6661 6x6 Tact Switch Series

ELECTRICAL
1.Rating: 50mA 12VDC
2.Contact Resistance : 50mΩ max(initial)
3.Insulation Resistance: 100MΩ(minDC 250V)
4.Dielectric Strength : AC250V(50/60Hz for 1minute)
5.Electrically Life: 100000cycles
6.Environment temperature:-20°C~+70°C
7.Operating Force: 180/250(±30gf)
8.Seal temperature:260°C~ 280°C

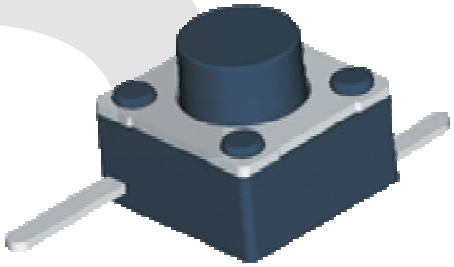

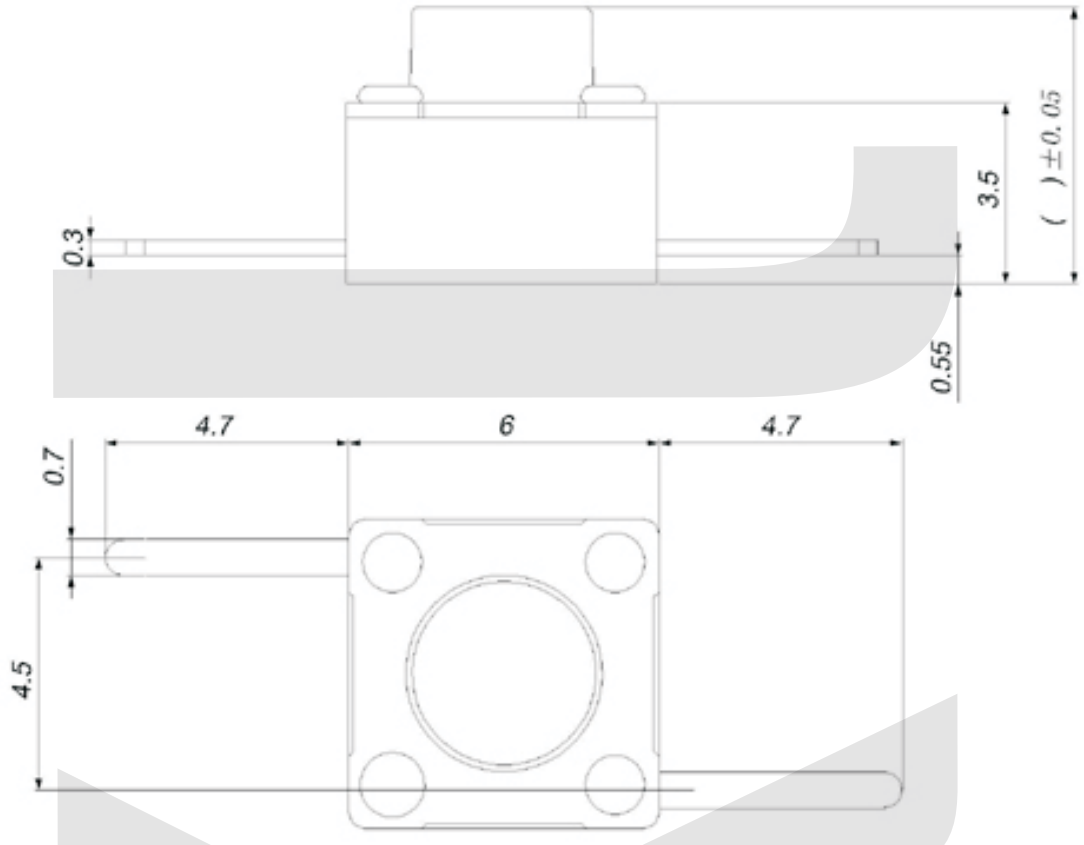

ORDER INFORMATION

KLS7-TS6661 - H1 - 180 -B

- Part Number
- Hight: H1=4.3mm H2=5.0mm H3=6.0mm H4=7.0mm
- Operating Force :180~250gf
- Packing: B-Bulk

Tact Switch Series

KLS7-TS3618 6.20 x 6.20mm Tact Switch Series

ELECTRICAL

1.Rating: 50mA 12VDC
2.Contact Resistance : 50mΩ Max.
3.Insulation Resistance: 100MΩ Min.
4.Dielectric Strength : AC250V(50/60Hz for 1minute)
5.Electrically Life: 100, 000cycles
6.Environment temperature:-25ºC~+70ºC
7.Operating Force: 180±30gf
8.Seal temperature:260ºC~ 280ºC



Dimension (unit: mm)

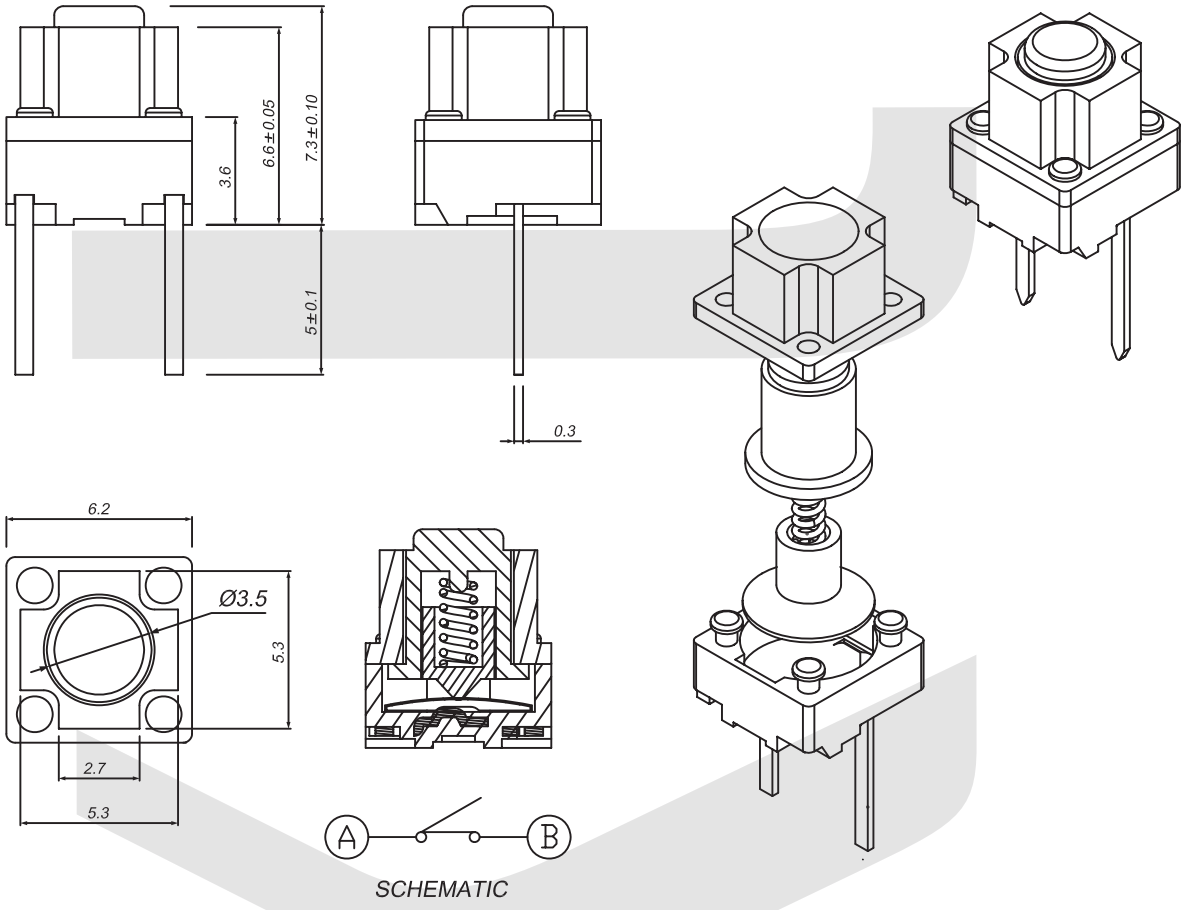

SCHEMATIC

ORDER INFORMATION

KLS7-TS3618 - 70 -B

Series No.
Packing: B-Bulk
Operating Force :70±30gf

Tact Switch Series

KLS7-TS7701 7x7 Water-proof Tact Switch Series

ELECTRICAL

1.Rating: 50mA 12VDC
2.Contact Resistance : 50mΩ max(initial)
3.Insulation Resistance: 100MΩ(minDC 250V)
4.Dielectric Strength : AC250V(50/60Hz for 1minute)
5.Electrically Life: 100000cycles
6.Environment temperature:-20°C~+70°C
7.Operating Force: 180/250(±30gf)
8.Seal temperature:260°C~ 280°C



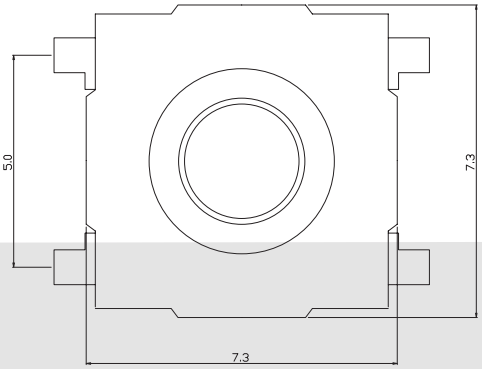

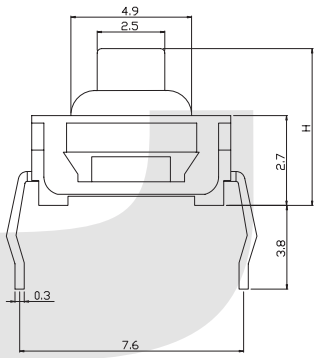

H1=4.3mm
H2=5.0mm

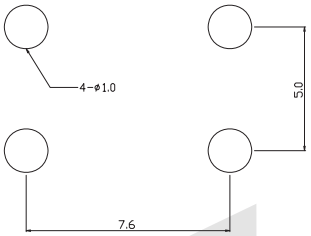

PCB LAYOUT

ORDER INFORMATION

KLS7-TS7701 - H1 - 180

Part Number

Hight: H1=4.3mm H2=5.0mm

Operating Force :180~250gf

Tact Switch Series

KLS7-TS7702 7x7 Water-proof Tact Switch Series

ELECTRICAL

1.Rating: 50mA 12VDC
2.Contact Resistance : 50mΩ max(initial)
3.Insulation Resistance: 100MΩ(minDC 250V)
4.Dielectric Strength : AC250V(50/60Hz for 1minute)
5.Electrically Life: 100000cycles
6.Environment temperature:-20°C~+70°C
7.Operating Force: 180/250(±30gf)
8.Seal temperature:260°C~ 280°C



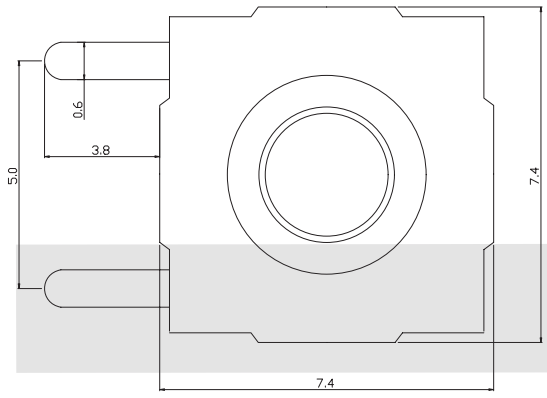

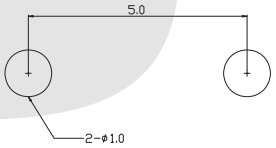

PCB LAYOUT

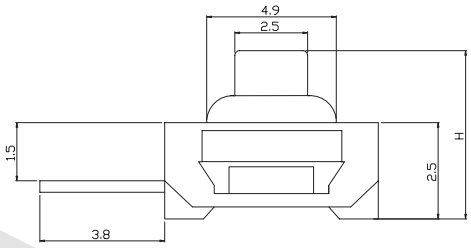

H1=4.3mm
H2=5.0mm

ORDER INFORMATION

KLS7-TS7702 - H1 - 180

Part Number
Hight: H1=4.3mm H2=5.0mm
Operating Force :180~250gf

Tact Switch Series

KLS7-TS7703 8x8 Water-proof Tact Switch Series

ELECTRICAL

1.Rating: 50mA 12VDC
2.Contact Resistance : 50mΩ max(initial)
3.Insulation Resistance: 100MΩ(minDC 250V)
4.Dielectric Strength : AC250V(50/60Hz for 1minute)
5.Electrically Life: 100000cycles
6.Environment temperature:-20°C~+70°C
7.Operating Force: 180/250(±30gf)
8.Seal temperature:260°C~ 280°C



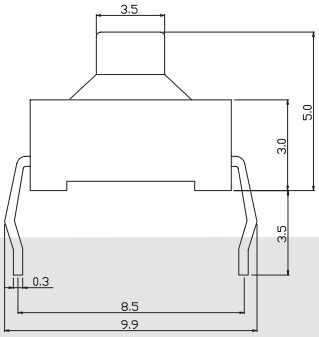

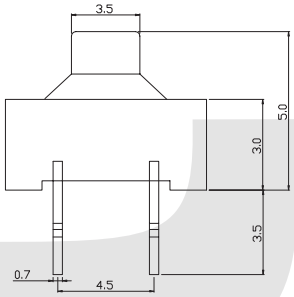

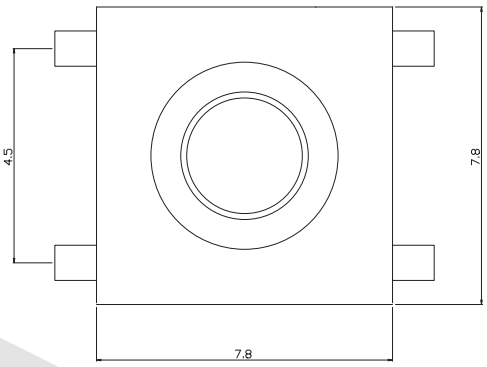

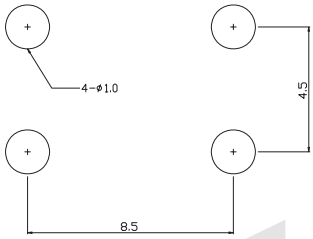

PCB LAYOUT

ORDER INFORMATION

KLS7-TS7703 - H1 - 180

Part Number
Hight: H1=5.0mm
Operating Force :180~250gf

Tact Switch Series

KLS7-TS7705 8x8 Tact Switch Series

ELECTRICAL

1.Rating: 50mA 12VDC
2.Contact Resistance : 100mΩ Max.
3.Insulation Resistance: 100MΩ Min.
4.Dielectric Strength : AC250V(50/60Hz for 1minute)
5.Electrically Life: 50, 000cycles
6.Environment temperature:-25°C~+70°C
7.Operating Force: 120±30gf
8.Seal temperature:260°C~ 280°C

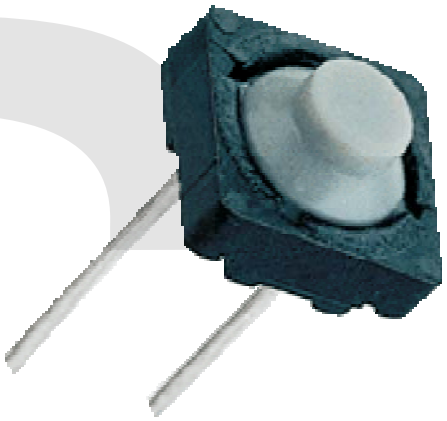

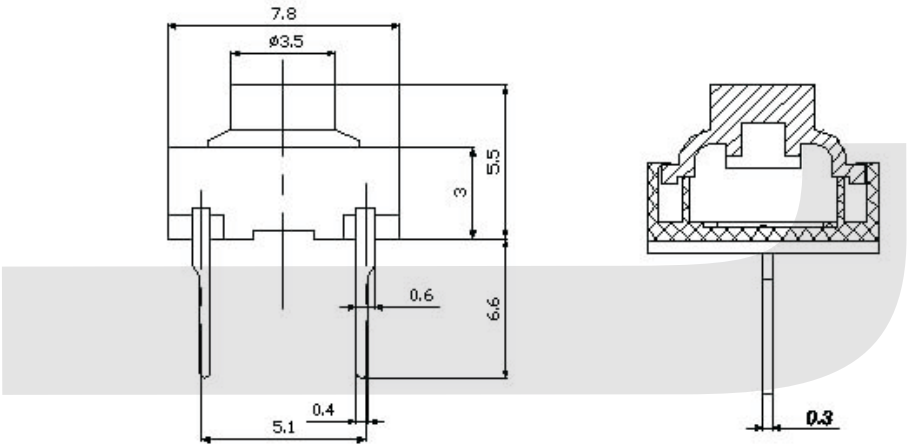

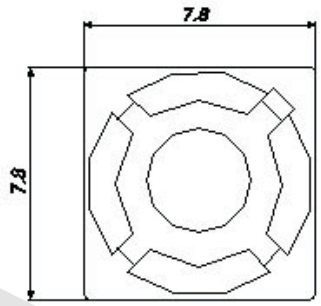

ORDER INFORMATION

KLS7-TS7705 - H1 - 120 -B

Part Number
High: H1=5.5mm
Operating Force :120gf
Packing: B-Bulk

Tact Switch Series

KLS7-TS7706 Tact Switch Series

ELECTRICAL
1.Rating: 50mA 12VDC
2.Contact Resistance : 50mΩ Max.
3.Insulation Resistance: 100MΩ Min.
4.Dielectric Strength : AC250V(50/60Hz for 1minute)
5.Electrically Life: 80, 000cycles
6.Environment temperature:-25°C~+70°C
7.Operating Force: 250±30gf
8.Seal temperature:260°C~ 280°C

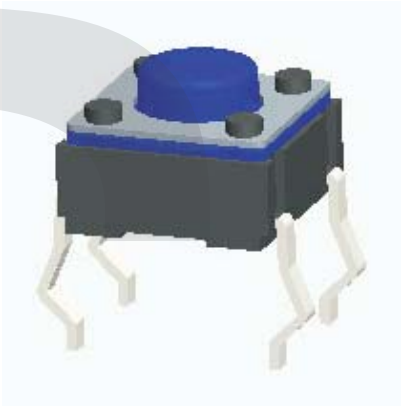

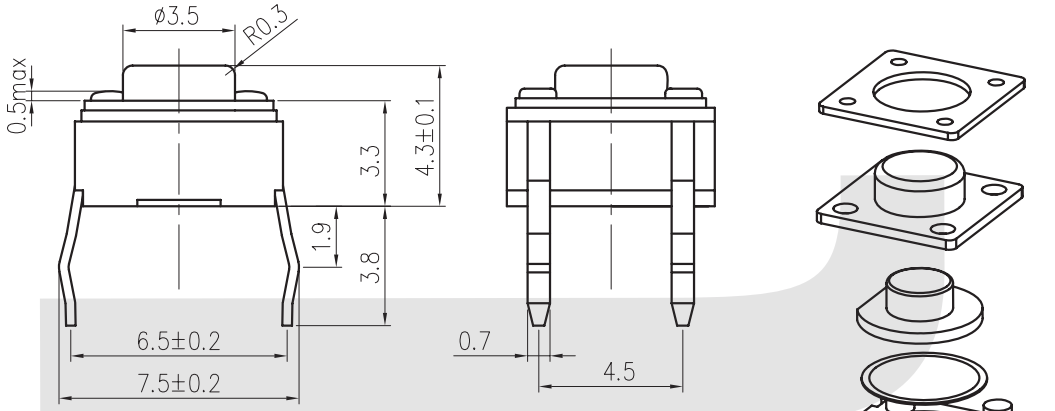

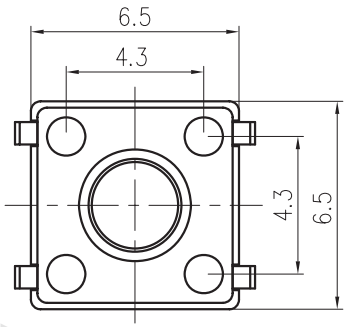

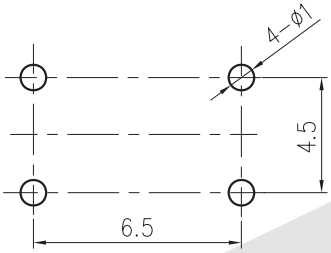

Recommended P.C.B layout

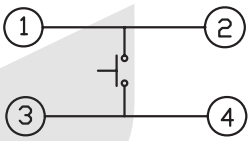

SCHEMATIC

ORDER INFORMATION

KLS7-TS7706 - H1-250 -B

Part Number

Packing: B-Bulk
Operating Force :250~280gf
Hight: H1=4.3mm

Tact Switch Series

KLS7-TS7707 Tact Switch Series

ELECTRICAL
1.Rating: 50mA 12VDC
2.Contact Resistance : 50mΩ Max.
3.Insulation Resistance: 100MΩ Min.
4.Dielectric Strength : AC250V(50/60Hz for 1minute)
5.Electrically Life: 80, 000cycles
6.Environment temperature:-25°C~+70°C
7.Operating Force: 250±30gf
8.Seal temperature:260°C~ 280°C



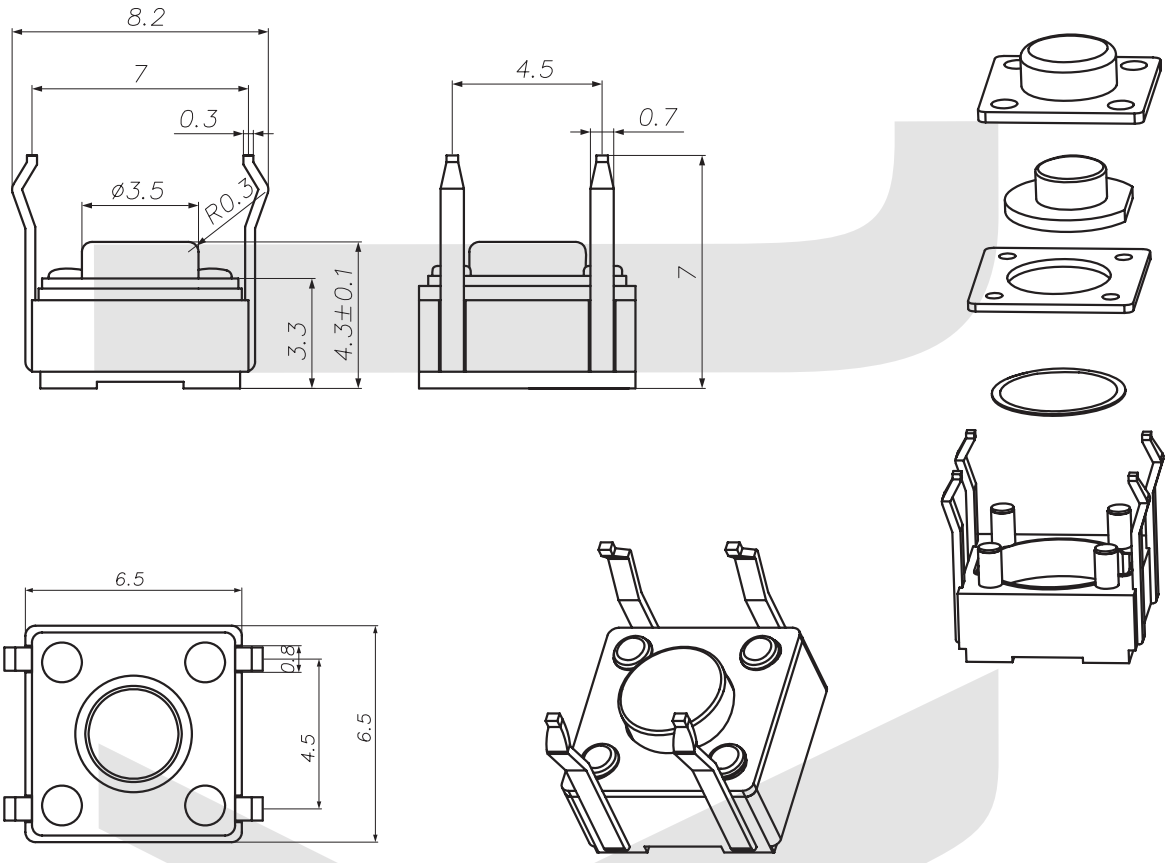

ORDER INFORMATION

KLS7-TS7707 - H1-250 -B

Part Number
Packing: B-Bulk
Operating Force :250~280gf
Hight: H1=4.3mm

Tact Switch Series

KLS7-TS7708 Tact Switch Series

ELECTRICAL
1.Rating: 50mA 12VDC
2.Contact Resistance : 50mΩ Max.
3.Insulation Resistance: 100MΩ Min.
4.Dielectric Strength : AC250V(50/60Hz for 1minute)
5.Electrically Life: 80, 000cycles
6.Environment temperature:-25°C~+70°C
7.Operating Force: 180~250±30gf
8.Seal temperature:260°C~ 280°C



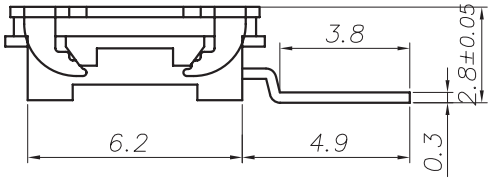

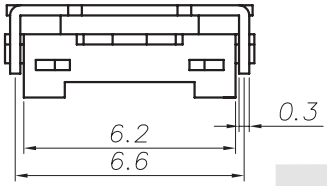

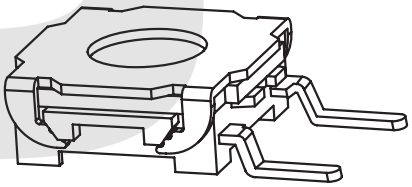

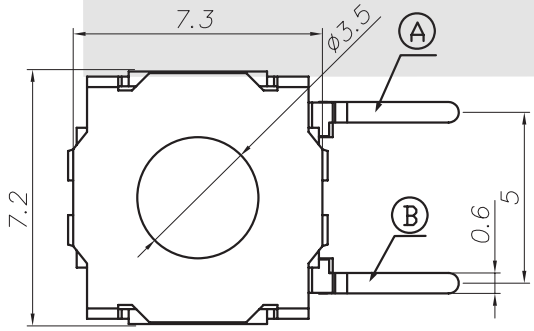

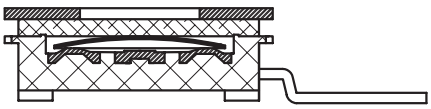

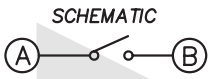

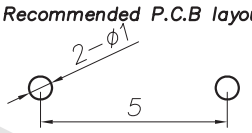

ORDER INFORMATION

KLS7-TS7708 - H1-250 -B

Part Number

Packing: B-Bulk
Operating Force :180~250gf
Hight: H1=2.8mm

Tact Switch Series

KLS7-TS7709 Tact Switch Series

ELECTRICAL
1.Rating: 50mA 12VDC
2.Contact Resistance : 50mΩ Max.
3.Insulation Resistance: 100MΩ Min.
4.Dielectric Strength : AC250V(50/60Hz for 1minute)
5.Electrically Life: 80, 000cycles
6.Environment temperature:-25°C~+70°C
7.Operating Force: 180~250±30gf
8.Seal temperature:260°C~ 280°C

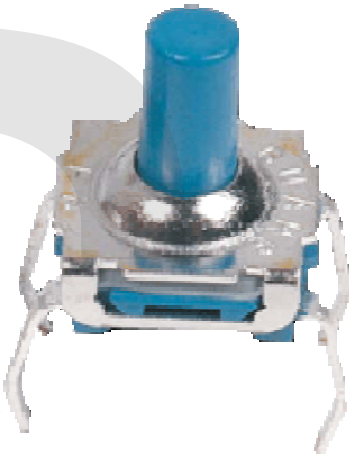

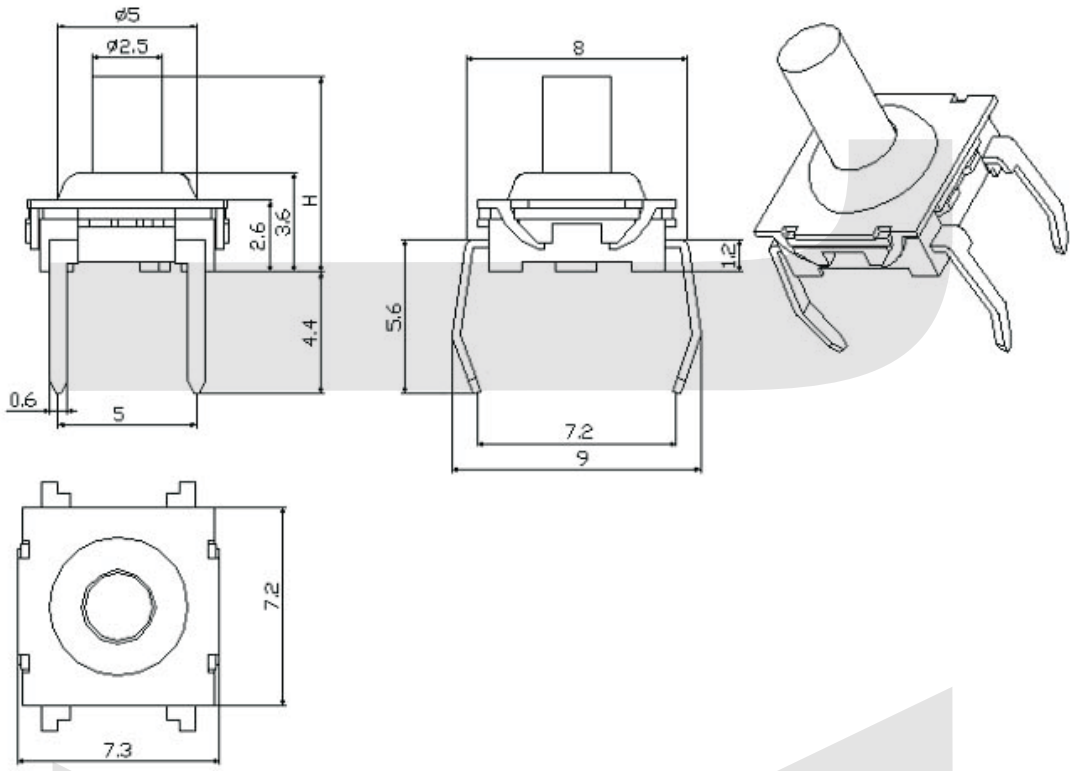

ORDER INFORMATION

KLS7-TS7709 - H1-250 -B

Part Number

Packing: B-Bulk
Operating Force :180~250gf
Hight: H1=5.0mm H2=9.9mm

Tact Switch Series

KLS7-TS7710 Tact Switch Series

ELECTRICAL
1.Rating: 50mA 12VDC
2.Contact Resistance : 50mΩ Max.
3.Insulation Resistance: 100MΩ Min.
4.Dielectric Strength : AC250V(50/60Hz for 1minute)
5.Electrically Life: 80, 000cycles
6.Environment temperature:-25°C~+70°C
7.Operating Force: 180~250±30gf
8.Seal temperature:260°C~ 280°C



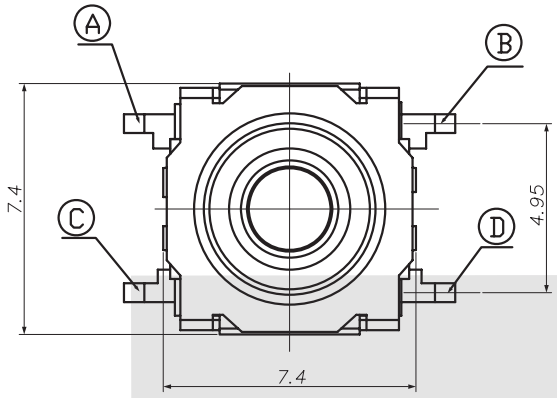

Recommended P.C.B layout

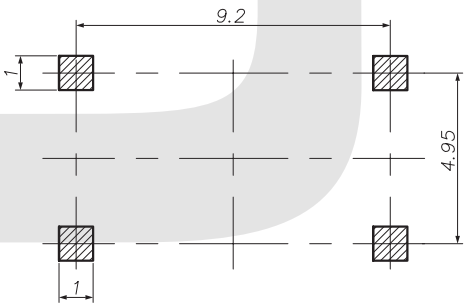

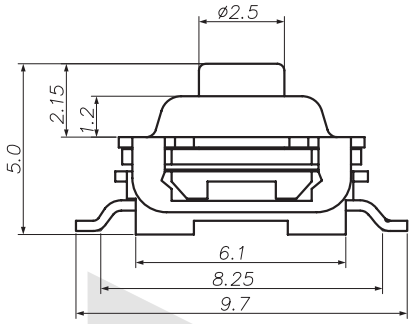

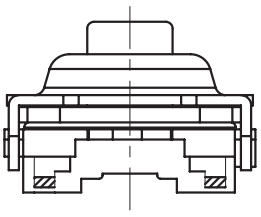

SCHEMATIC

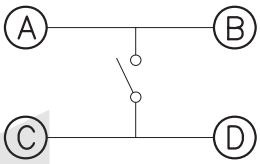

ORDER INFORMATION

KLS7-TS7710 - H1-250 -B

Part Number
Packing: B-Bulk T-Tape
Operating Force :180~250gf
Hight: H1=5.0mm

DIP Switch Series

KLS7-TSE2

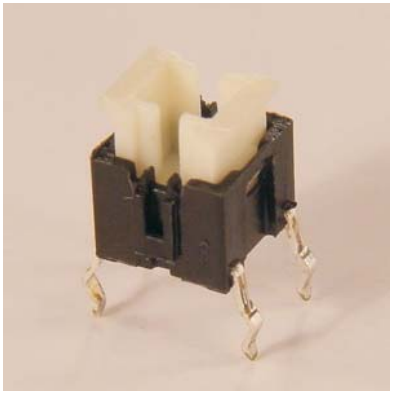

SPECIFICATIONS
Contact Rating:50mA@12 VDC
Electrical life:1,000,000cycles
Mechanical life:1,000,000 cycles min
Position Travel:0.25 0 .1
Insulation Resistance: > 100MΩ DC250V
Withstand Voltage:AC250V 1 minute
Contact Resistance: < 100mΩ
Ambient Temper : -25℃ to70℃
Operating Force : 80 2 0 gf ; 120 3 0 gf ; 180 5 0 gf
Soldering Process :
Hand soldering : Use a soldering iron of 30 watts,
controlled at 380℃ approximately 3seconds while applying solder.
Wave soldering: When applying wave soldering,
he peak temperature of the wave Oven should be set to 260℃max.
Condition for soldering (Wave & Non-washable Type) Temperature Profile: (Figure 1)
Reflow soldering: When applying reflow soldering,
the peak temperature of the reflow Oven should be set to 250℃max.
Condition for soldering (Reflow & Non-washable Type) Temperature Profile: (Figure 2)

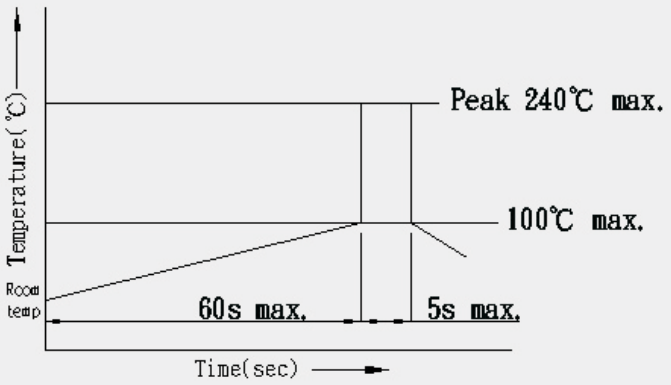

Items	Condition
Preheating temperature	Ambient temperature of the soldered surface of PC board.100℃ max.
Preheating time	60s max.
Soldering temperature	240℃ max.
Continuous dipping time	5s max.
Number of soldering	2 times max.

Wave soldering (Figure 1)

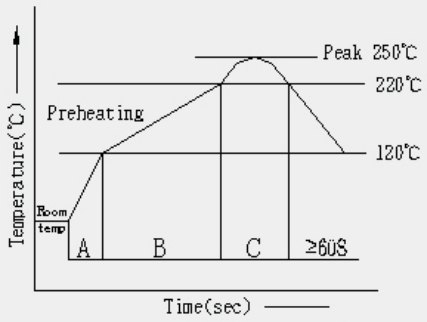

	Components size		Unit
A	Temp. rise gradient	40S	sec
B	Heating time	60-120S	sec
	Heating temperature	120-220℃	℃
C	Time over 220℃	60-90S	sec
	Peak temperature	250	℃
	Peak-temp. hold time	moment	sec
Soldering		1	times

Rellow soldering (Figure 2)

ORDER INFORMATION

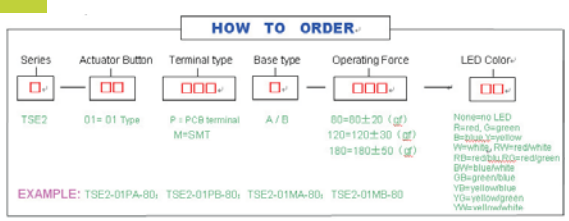

TERMINAL AND COVER OPTIONS

TSE2 Series TACT SWITCH

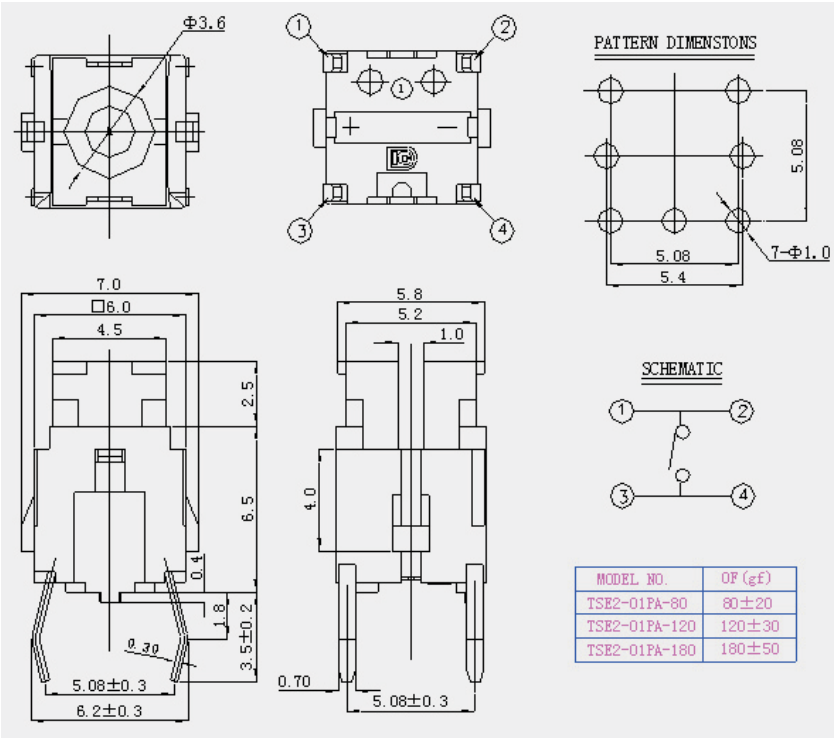

MODEL NO.	OF(gf)
TSE2-01PA-80	80±20
TSE2-01PA-120	120±30
TSE2-01PA-180	180±50



TSE2-01PA

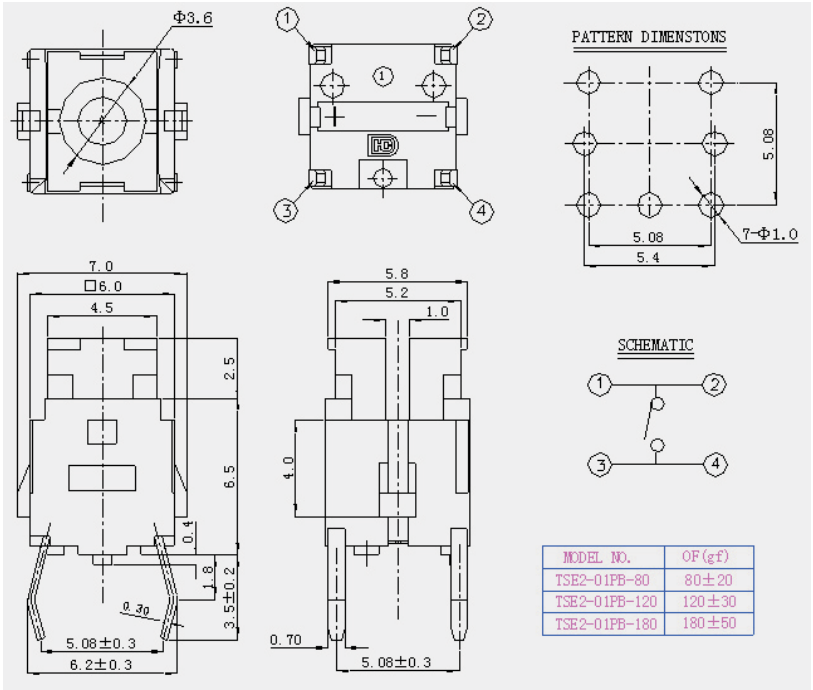

MODEL NO.	OF(gf)
TSE2-01PB-80	80±20
TSE2-01PB-120	120±30
TSE2-01PB-180	180±50



TSE2-01PB

TERMINAL AND COVER OPTIONS

TSE2 Series TACT SWITCH

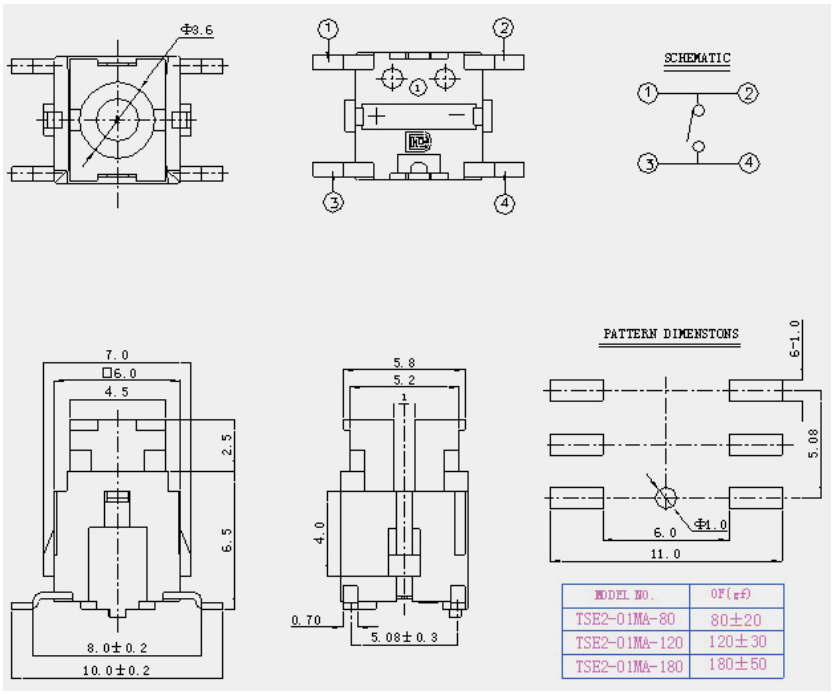

MODEL NO.	OF(gf)
TSE2-01MA-80	80±20
TSE2-01MA-120	120±30
TSE2-01MA-180	180±50



TSE2-01MA

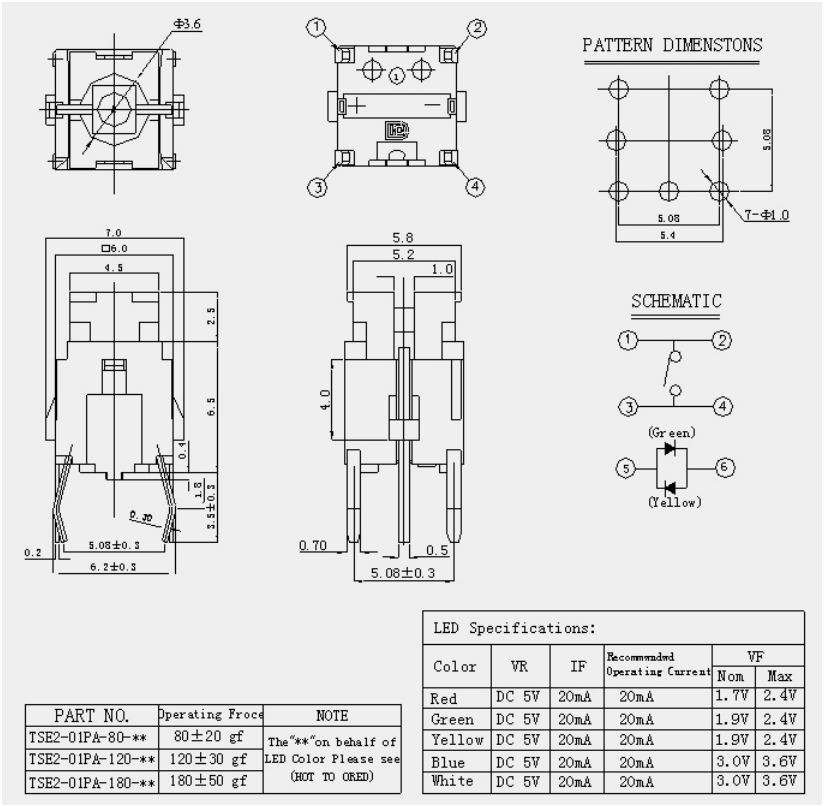

PART NO.	Operating Froce	NOTE
TSE2-01PA-80-**	80±20 gf	The"**"on behalf of LED Color Please see (NOT TO ORED)
TSE2-01PA-120-**	120±30 gf	
TSE2-01PA-180-**	180±50 gf	

LED Specifications:					
Color	VR	IF	Recommanded Operating Current	VF	
				Nom	Max
Red	DC 5V	20mA	20mA	1.7V	2.4V
Green	DC 5V	20mA	20mA	1.9V	2.4V
Yellow	DC 5V	20mA	20mA	1.9V	2.4V
Blue	DC 5V	20mA	20mA	3.0V	3.6V
White	DC 5V	20mA	20mA	3.0V	3.6V



TSE2-01 PA

Switch

KLS electronic
www.cnkls.com

TERMINAL AND COVER OPTIONS

TSE2 Series TACT SWITCH

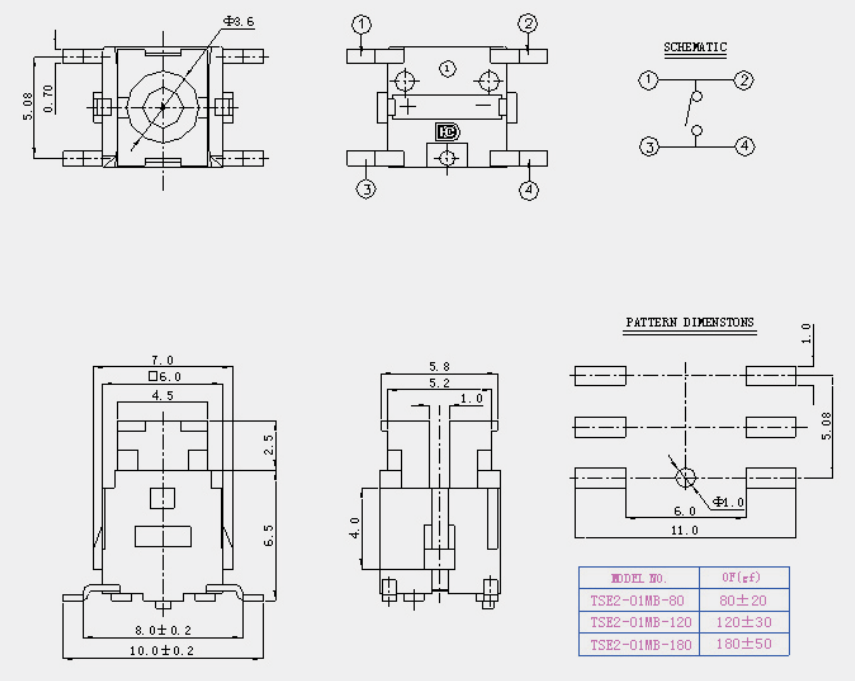



TSE2-01MB

PACKING EXPLANATION :

①60,000 PCS for one big box(1,000 PCS for one bag, 10bags for one small carton,6 small cartons for one big box.)
②Canal packaging : 80 switche shall be packed in a strip ;Ten(10) strips at maximum shall be packed in a bag.
Canal form and dimensions

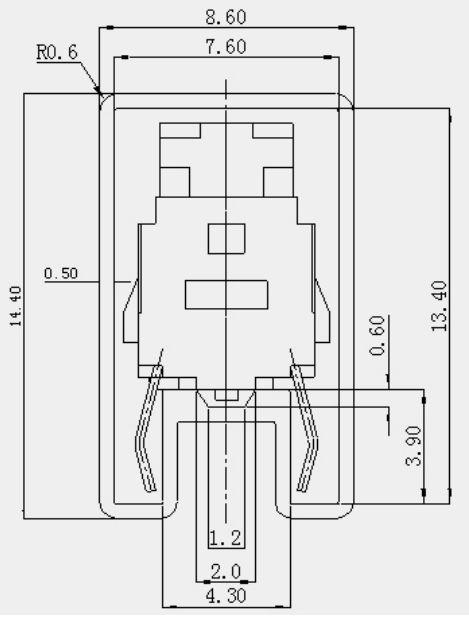

TSE2-P**

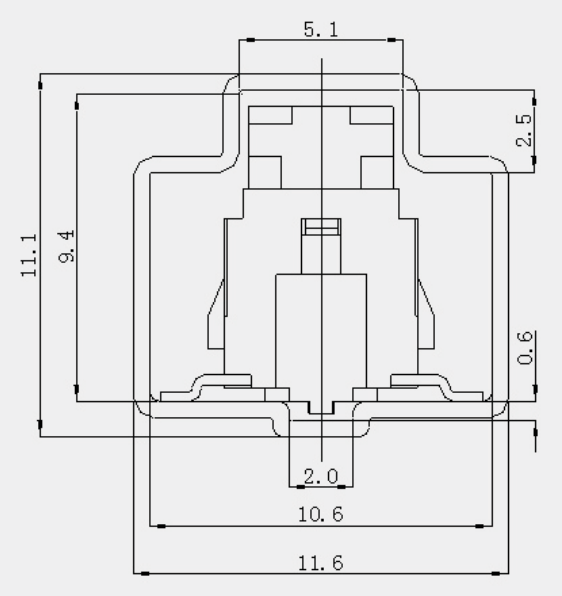

TSE2-M**

Tact Switch Series

VII

KLS7-TS7711 7x7mm Tact Switch Series

ELECTRICAL

1.Rating: 50mA 12VDC
2.Contact Resistance : 50mΩ Max.
3.Insulation Resistance: 100MΩ Min.
4.Dielectric Strength : AC250V(50/60Hz for 1minute)
5.Electrically Life: 50, 000cycles
6.Environment temperature:-25ºC~+70ºC
7.Operating Force: 250±30gf
8.Seal temperature:260ºC~ 280ºC



Dimension (unit: mm)

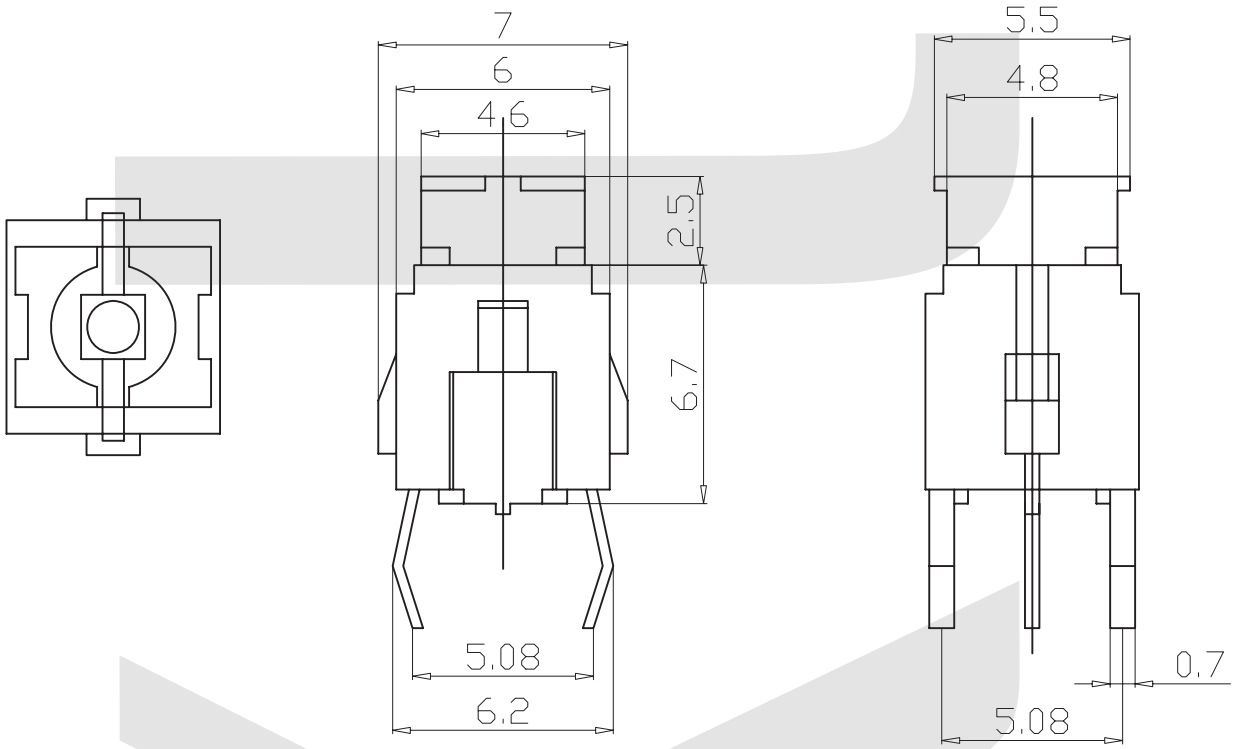

ORDER INFORMATION

KLS7-TS7711-9.2-260-R

Series No.
High: 9.2mm

Color:R=Red Y=Yellow
G=Green B=Blue
Operating Force :280gf

Tact Switch Series

KLS7-TS7712 7.5x7.5mm Tact Switch Series

ELECTRICAL

1.Rating: 50mA 12VDC
2.Contact Resistance : 50mΩ Max.
3.Insulation Resistance: 100MΩ Min.
4.Dielectric Strength : AC250V(50/60Hz for 1minute)
5.Electrically Life: 50, 000cycles
6.Environment temperature:-25ºC~+70ºC
7.Operating Force: 250±30gf
8.Seal temperature:260ºC~ 280ºC



Dimension (unit: mm)

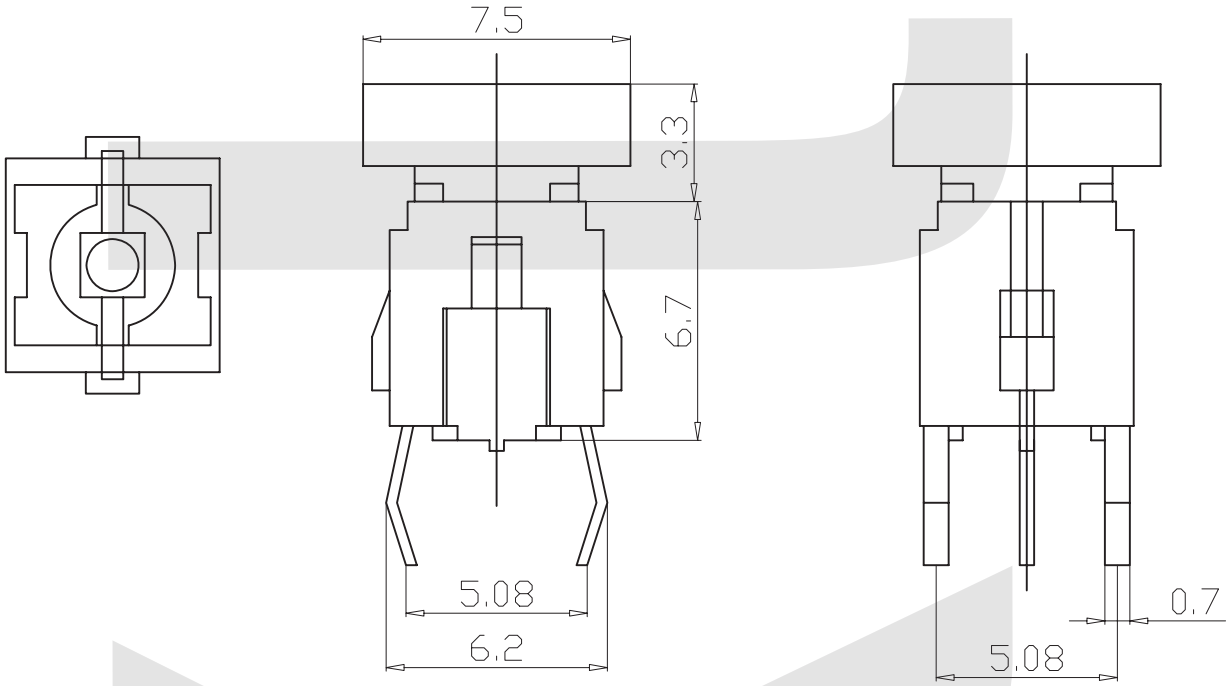

ORDER INFORMATION

KLS7-TS7712 -10.0-260-R

Series No.
High: 10.0mm

Color:R=Red Y=Yellow
G=Green B=Blue
Operating Force :280gf

Tact Switch Series

KLS7-TS7715 7x7 Tact Switch Series

ELECTRICAL

1.Rating: 50mA 12VDC
2.Contact Resistance : 50mΩ Max.
3.Insulation Resistance: 100MΩ Min.
4.Dielectric Strength : AC250V(50/60Hz for 1minute)
5.Electrically Life: 100, 000cycles
6.Environment temperature:-25°C~+70°C
7.Operating Force: 120±20gf
8.Seal temperature:260°C~ 280°C



Dimension（unit：mm）

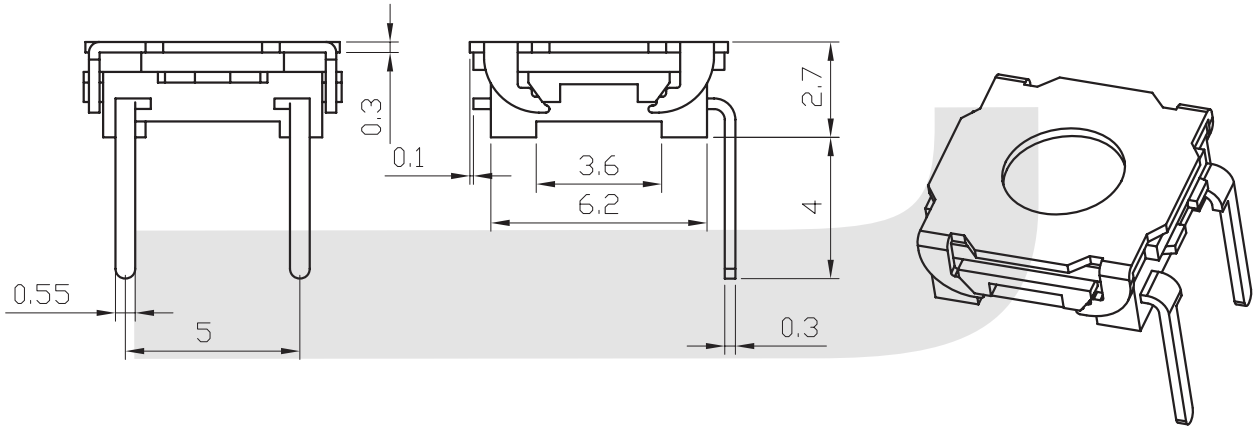

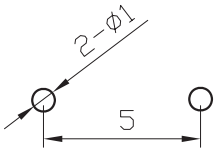

P.C.B layout



SCHEMATIC

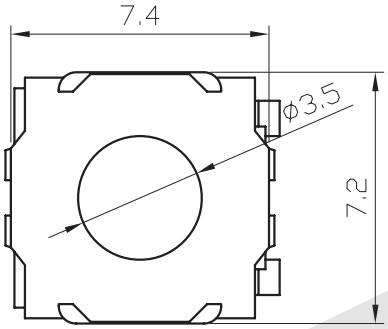

ORDER INFORMATION

KLS7-TS7715 -2.7 - 120

Series No.
High: 2.7mm

Operating Force :120gf

Tact Switch Series

VII

KLS7-TS7716 8x8 Tact Switch Series

ELECTRICAL

1.Rating: 50mA 12VDC
2.Contact Resistance : 100mΩ Max.
3.Insulation Resistance: 100MΩ Min.
4.Dielectric Strength : AC250V(50/60Hz for 1minute)
5.Electrically Life: 50, 000cycles
6.Environment temperature:-25ºC~+70ºC
7.Operating Force: 160~250±50gf
8.Seal temperature:260ºC~ 280ºC
9. Waterproof to IEC529 seven performance standards
10. In the high humidity environment or the possibility of condensation in the context of its use, in order to prevent leakage current between terminals, be sure the switch is installed to cover the terminal to be coated



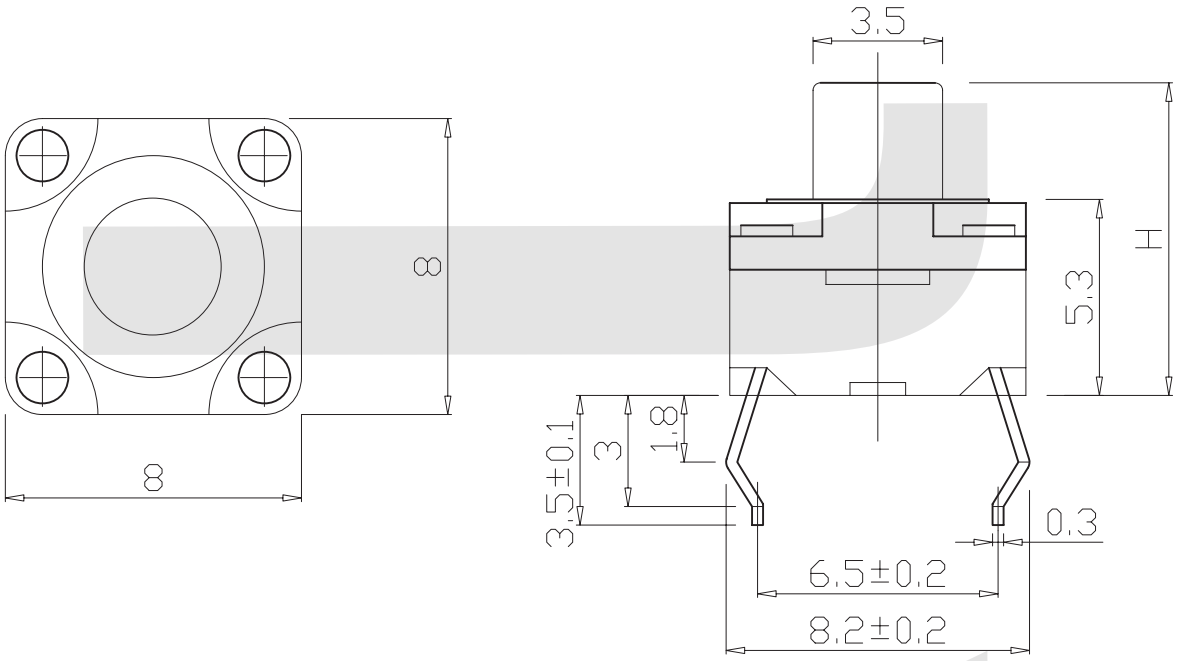

ORDER INFORMATION

KLS7-TS7716 - H1 - 160 -B

Part Number

Packing: B-Bulk
Operating Force :160~250gf
High: H1=7.5mm H2=12.0mm

Tact Switch Series

VII

KLS7-TS7717 7×7 Tach Switch Series



ELECTRICAL

1.Rating: 50mA 12VDC
2.Contact Resistance : 100M ΩMax
3.Insulation Resistance: 100M ΩMin
4.Dielectric Strength : AC250V(50/60Hz for 1 mminute
5.Electrically Life: 100000cycles
6.Environment temperature:-20 C~+70 C
7.Operating Force: 160/250(±50gf)
8.Seal temperature:260 C~ 280 C

Dimension (unit: mm)

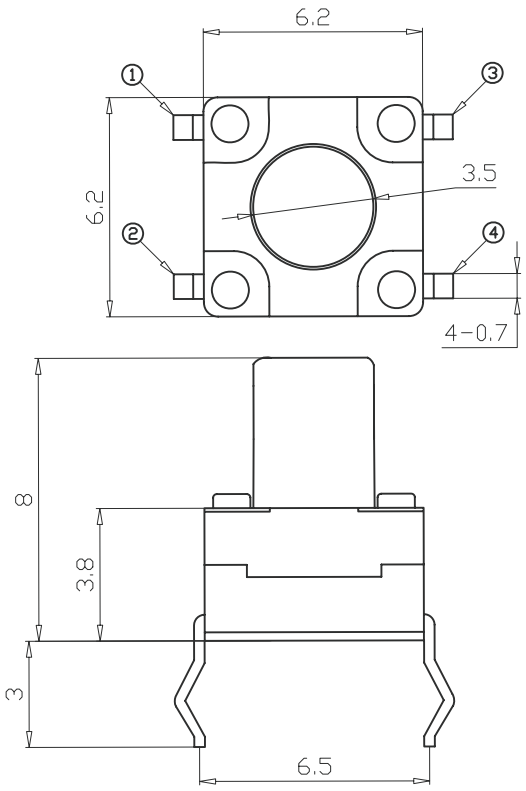

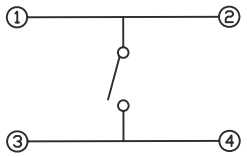

Circuit diagram

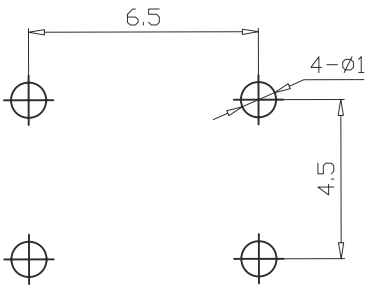

PCBLayout

H
4.3
5.0
6.0
7.0
7.5
8.5
9.0
9.5
11.0

ORDER INFORMATION

KLS7-TS- 7717 - 4.3 -180

Series No.

Operating Force:160/250 gf

Hight: 4.3mm/5.0mm/6.0mm/7.0mm
7.5mm/8.0mm/8.5mm/9.0mm
9.5mm/11.0mm

Tact Switch Series

VII

KLS7-TS1001 10x10mm Water-proof Tact Switch Series

ELECTRICAL

1.Rating: 50mA 12VDC
2.Contact Resistance : 100mΩ Max.
3.Insulation Resistance: 100MΩ Min.
4.Dielectric Strength : AC250V(50/60Hz for 1minute)
5.Electrically Life: 100, 000cycles
6.Environment temperature:-25ºC~+70ºC
7.Operating Force: 260±50gf
8.Seal temperature:260ºC~ 280ºC

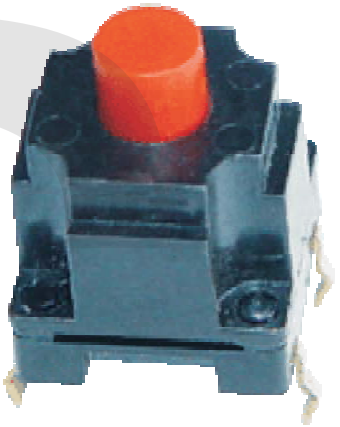

Dimension (unit: mm)

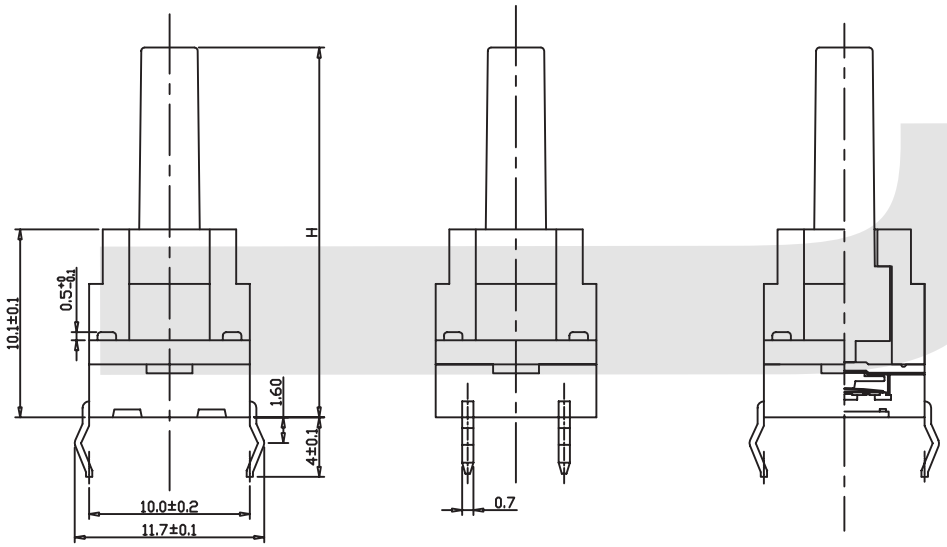

H
13.0
23.2

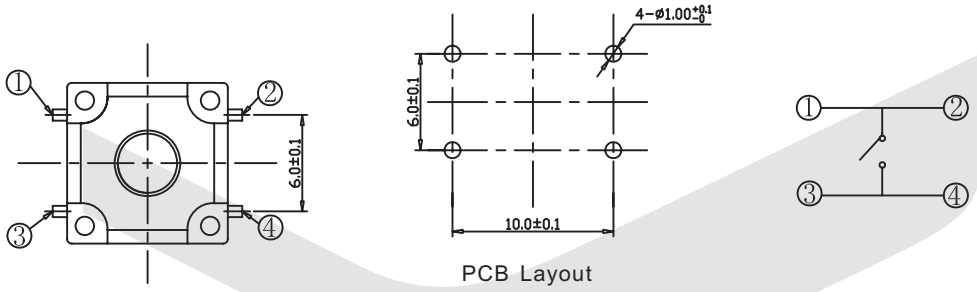

PCB Layout

ORDER INFORMATION

KLS7-TS1001 -13.0-260

Series No.
High: 13.0mm/23.2mm

Operating Force :260gf

Tact Switch Series

VII

KLS7-TS1002 9mm Water-proof Tact Switch Series

ELECTRICAL

1.Rating: 50mA 12VDC
2.Contact Resistance : 500mΩ Max.
3.Insulation Resistance: 100MΩ Min.
4.Dielectric Strength : AC250V(50/60Hz for 1minute)
5.Electrically Life: 100, 000cycles
6.Environment temperature:-20°C~+70°C
7.Operating Force: 260±50gf
8.Seal temperature:260°C~ 280°C

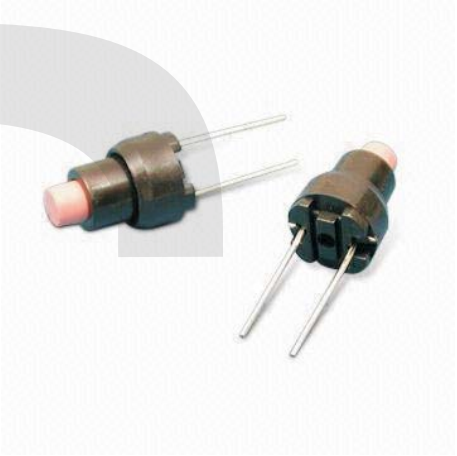

Dimension (unit: mm)

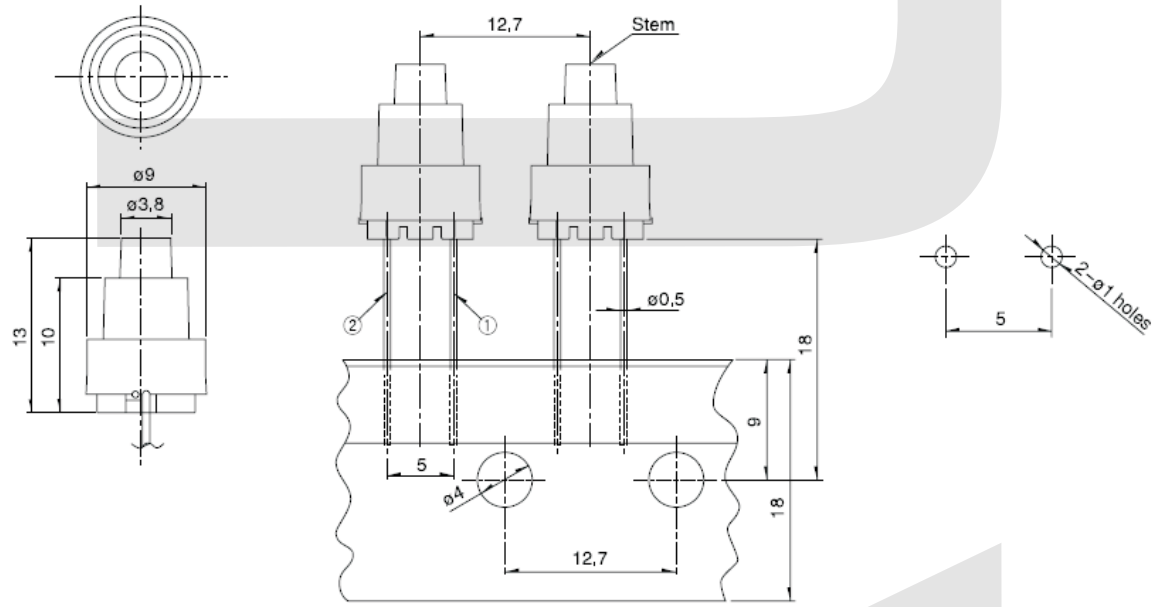

ORDER INFORMATION

KLS7-TS1002 -13.0-260-B

Series No.
High: 13.0mm/23.2mm

Packing: B=Bulk T=Tape
Operating Force :260gf

Tact Switch Series

VII

KLS7-TS1201 12x12 Tact Switch Series

ELECTRICAL

1.Rating: 50mA 12VDC
2.Contact Resistance : 50mΩ max(initial)
3.Insulation Resistance: 100MΩ(minDC 250V)
4.Dielectric Strength : AC250V(50/60Hz for 1minute)
5.Electrically Life: 100000cycles
6.Environment temperature:-20°C~+70°C
7.Operating Force: 180/250(±30gf)
8.Seal temperature:260°C~ 280°C



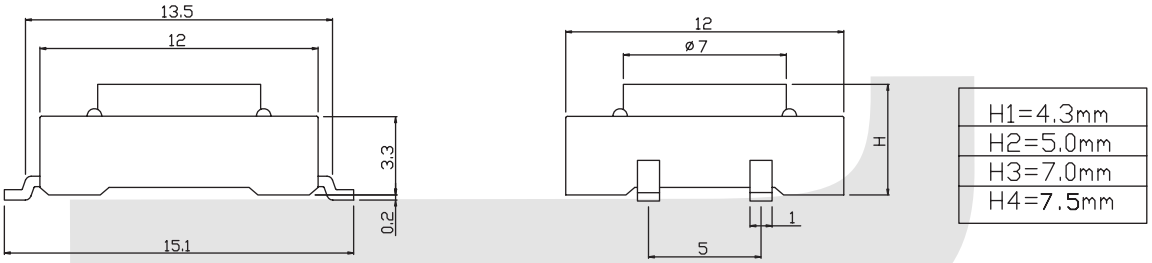

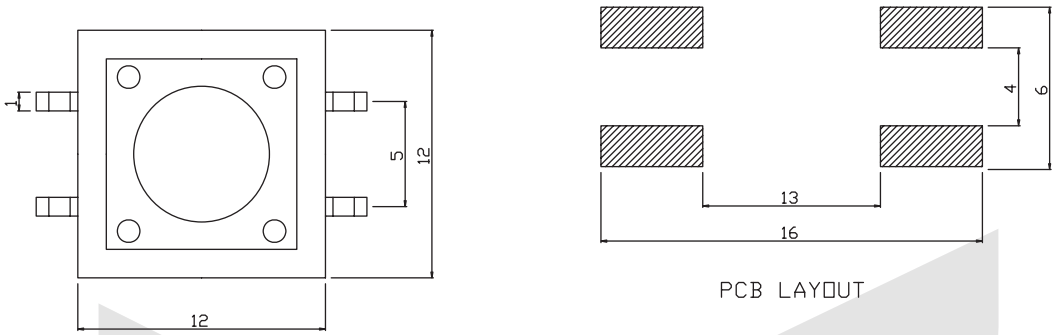

ORDER INFORMATION

KLS7-TS1201 - H1 - 180 -B

Part Number
Hight: H1=4.3mm H2=5.0mm H3=7.0mm H4=7.5mm
Operating Force :180~250gf
Packing: B=Bulk T=Tape

Tact Switch Series

VII

KLS7-TS1202 12x12 Tact Switch Series

ELECTRICAL

1.Rating: 50mA 12VDC
2.Contact Resistance : 50mΩ max(initial)
3.Insulation Resistance: 100MΩ(minDC 250V)
4.Dielectric Strength : AC250V(50/60Hz for 1minute)
5.Electrically Life: 100000cycles
6.Environment temperature:-20°C~+70°C
7.Operating Force: 180/250(±30gf)
8.Seal temperature:260°C~ 280°C



Dimension (unit: mm)

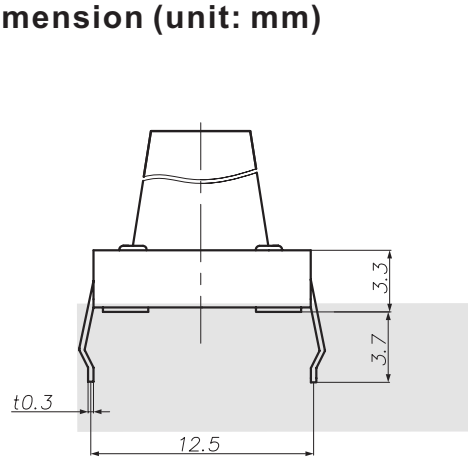

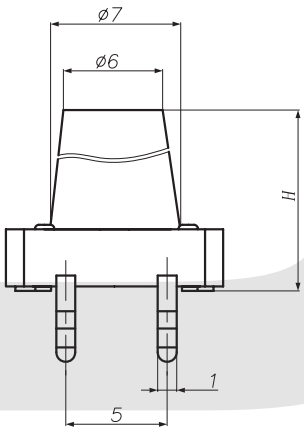

H
4.3
4.5
5.0
7.0
7.5
8.0
8.5
9.0
10.0
11.0
12.0
13.0
15.0
18.0

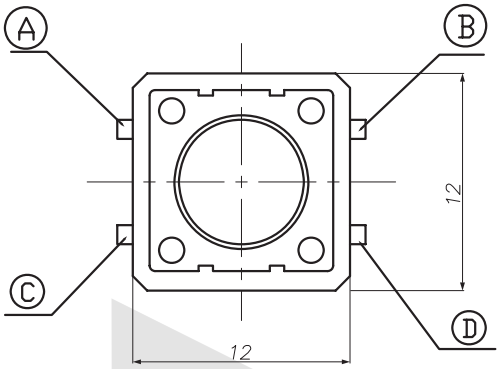

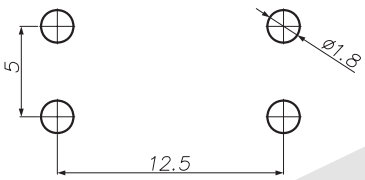

P.C.B layout

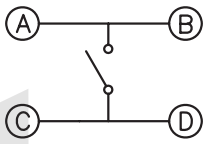

SCHEMATIC

ORDER INFORMATION

KLS7-TS1202 - 4.3 - 180

Series No.

Hight: 4.3mm/4.5mm/5.0mm/7.0mm/
7.5mm/8.0mm/8.5mm/9.0mm/
10.0mm/11.0mm/12.0mm/
13.0mm/15.0mm/18.0mm

Operating Force :180~250gf

Tact Switch Series

KLS7-TS1203 12x12 Tact Switch Series

ELECTRICAL

1.Rating: 50mA 12VDC
2.Contact Resistance : 50mΩ max(initial)
3.Insulation Resistance: 100MΩ(minDC 250V)
4.Dielectric Strength : AC250V(50/60Hz for 1minute)
5.Electrically Life: 100000cycles
6.Environment temperature:-20°C~+70°C
7.Operating Force: 180/250(±30gf)
8.Seal temperature:260°C~ 280°C



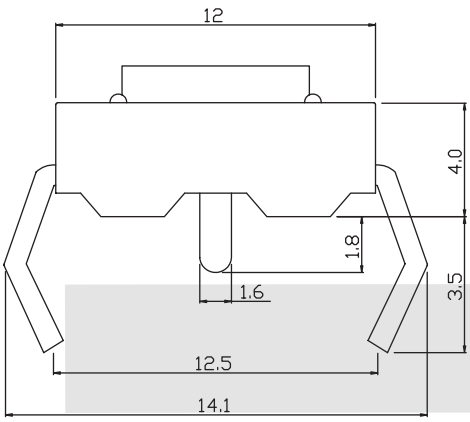

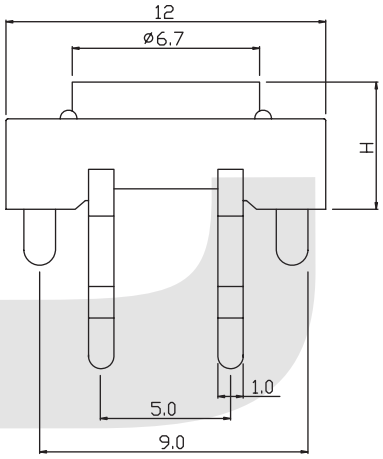

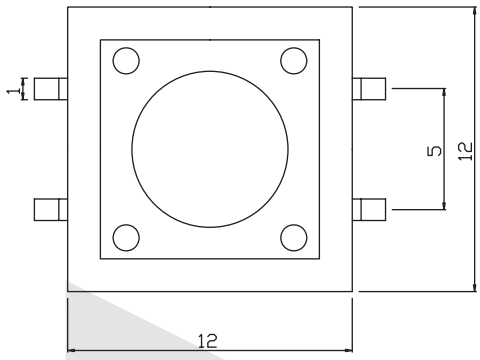

H1=4.3mm
H2=5.0mm
H3=7.0mm
H4=7.5mm

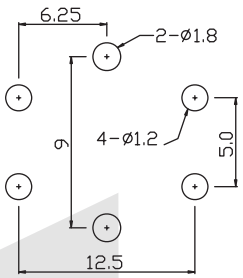

PCB LAYOUT

ORDER INFORMATION

KLS7-TS1203 - H1 - 180

Part Number

Operating Force :180~250gf

Hight: H1=4.3mm H2=5.0mm
H3=7.0mm H4=7.5mm

Tact Switch Series

KLS7-TS1204 12x12 Tact Switch Series

ELECTRICAL

1.Rating: 50mA 12VDC
2.Contact Resistance : 50mΩ max(initial)
3.Insulation Resistance: 100MΩ(minDC 250V)
4.Dielectric Strength : AC250V(50/60Hz for 1minute)
5.Electrically Life: 100000cycles
6.Environment temperature:-20°C~+70°C
7.Operating Force: 180/250(±30gf)
8.Seal temperature:260°C~ 280°C



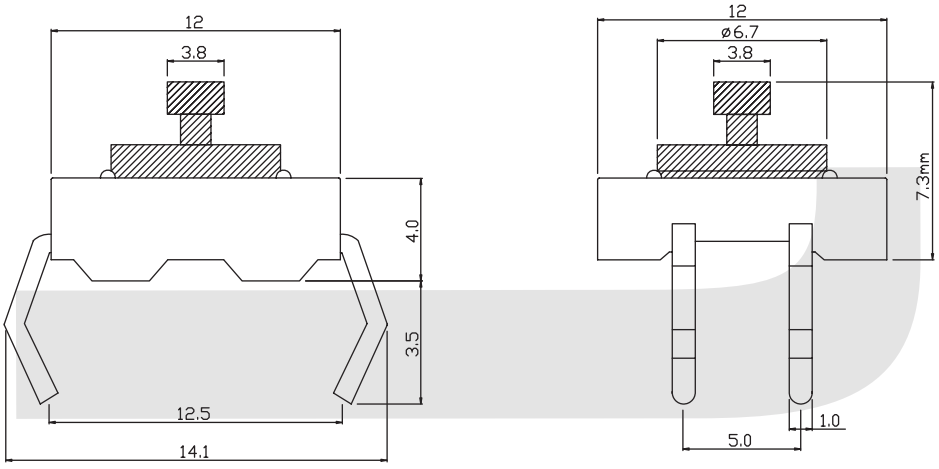

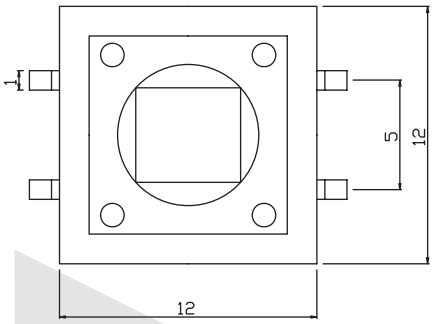

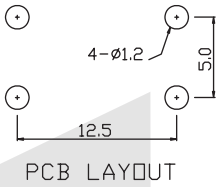

ORDER INFORMATION

KLS7-TS1204 - H1 - 180

Part Number
Hight: H1=7.3mm
Operating Force :180~250gf

Tact Switch Series

KLS7-TS1205 12x12 Tact Switch Series

ELECTRICAL

1.Rating: 50mA 12VDC
2.Contact Resistance : 50mΩ max(initial)
3.Insulation Resistance: 100MΩ(minDC 250V)
4.Dielectric Strength : AC250V(50/60Hz for 1minute)
5.Electrically Life: 100000cycles
6.Environment temperature:-20°C~+70°C
7.Operating Force: 180/250(±30gf)
8.Seal temperature:260°C~ 280°C



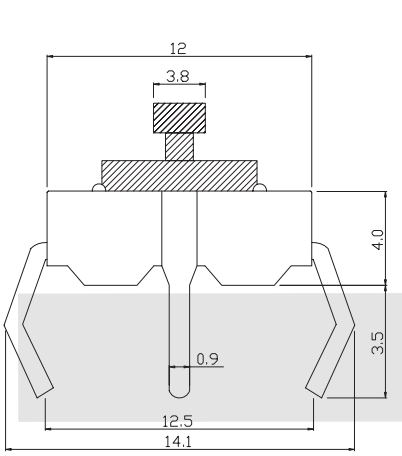

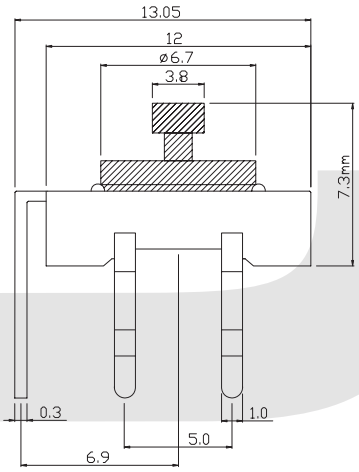

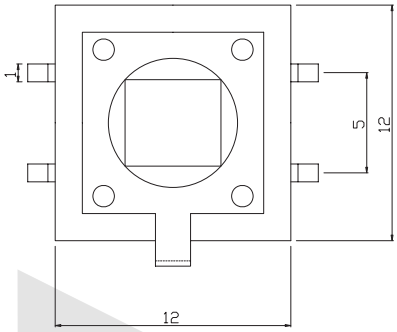

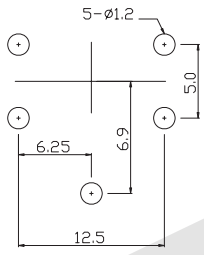

PCB LAYOUT

ORDER INFORMATION

KLS7-TS1205 - H1 - 180

Part Number
Hight: H1=7.3mm
Operating Force :180~250gf

Tact Switch Series

VII

KLS7-TS1206 12x12 Tact Switch Series

ELECTRICAL

1.Rating: 50mA 12VDC
2.Contact Resistance : 50mΩ max(initial)
3.Insulation Resistance: 100MΩ(minDC 250V)
4.Dielectric Strength : AC250V(50/60Hz for 1minute)
5.Electrically Life: 100000cycles
6.Environment temperature:-20°C~+70°C
7.Operating Force: 180/250(±30gf)
8.Seal temperature:260°C~ 280°C



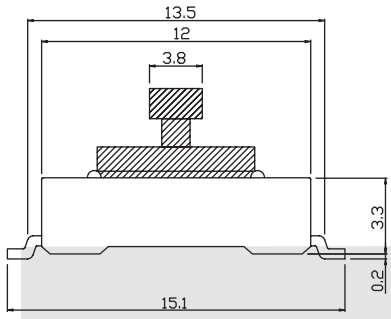

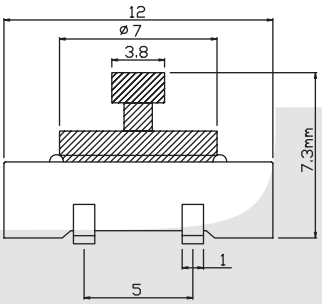

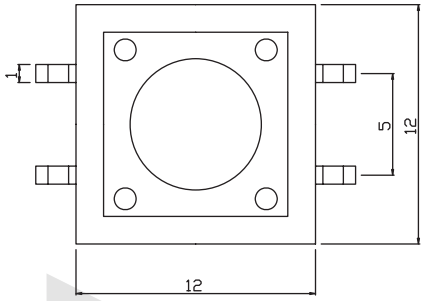

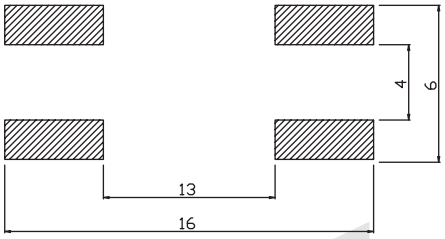

PCB LAYOUT

ORDER INFORMATION

KLS7-TS1206 - H1 - 180

Part Number
Hight: H1=7.3mm
Operating Force :180~250gf

Tact Switch Series

KLS7-TS1207 12x12 Tact Switch Series

ELECTRICAL

1.Rating: 50mA 12VDC
2.Contact Resistance : 50mΩ max(initial)
3.Insulation Resistance: 100MΩ(minDC 250V)
4.Dielectric Strength : AC250V(50/60Hz for 1minute)
5.Electrically Life: 100000cycles
6.Environment temperature:-20°C~+70°C
7.Operating Force: 180/250(±30gf)
8.Seal temperature:260°C~ 280°C



Dimension (unit: mm)

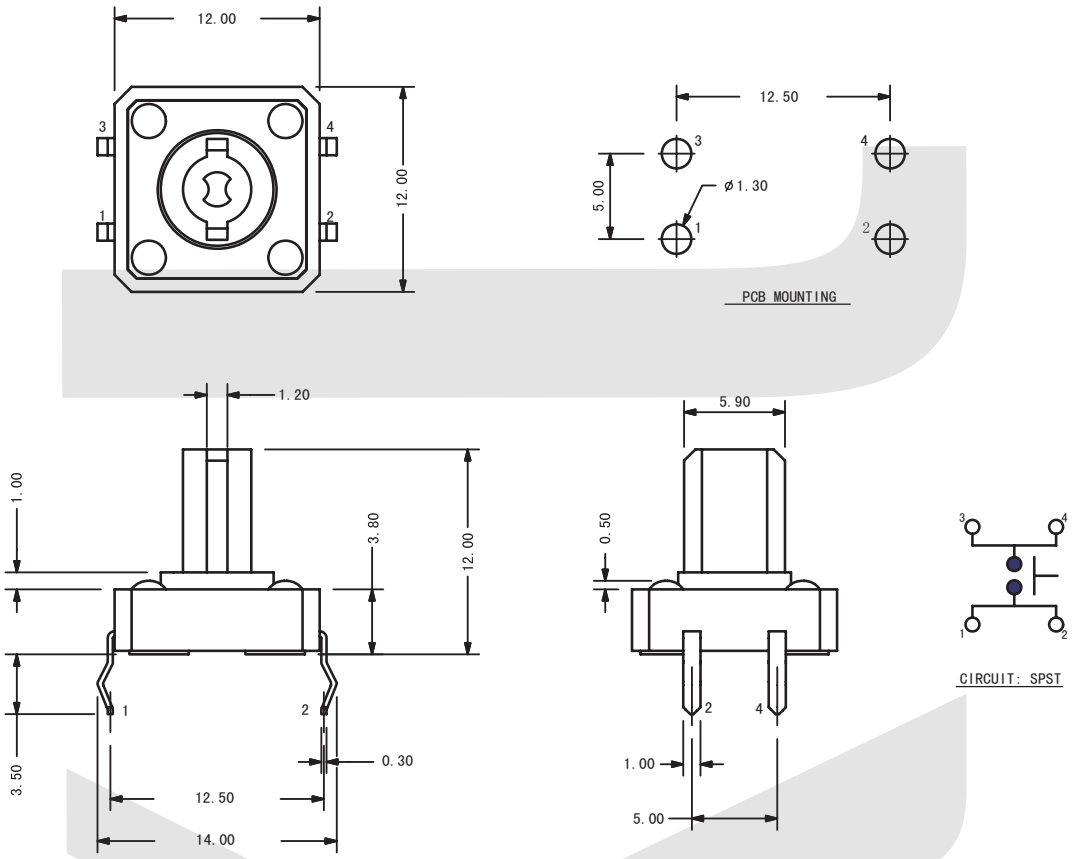

ORDER INFORMATION

KLS7-TS1207 -12.0 - 180

Series No.
Hight: 12.0mm
Operating Force :180~250gf

Tact Switch Series

KLS7-TS1208 12x12 Tact Switch Series

ELECTRICAL
1.Rating: 50mA 12VDC
2.Contact Resistance : 50mΩ Max.
3.Insulation Resistance: 100MΩ Min.
4.Dielectric Strength : AC250V(50/60Hz for 1minute)
5.Electrically Life: 80, 000cycles
6.Environment temperature:-25°C~+70°C
7.Operating Force: 250/280(±30gf)
8.Seal temperature:260°C~ 280°C

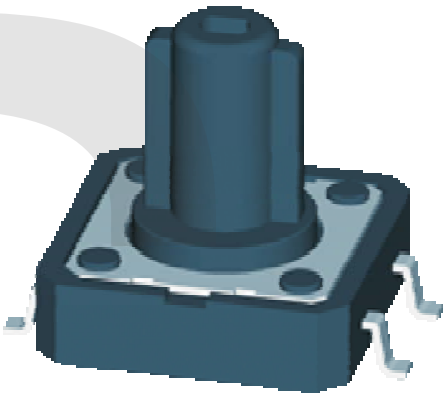

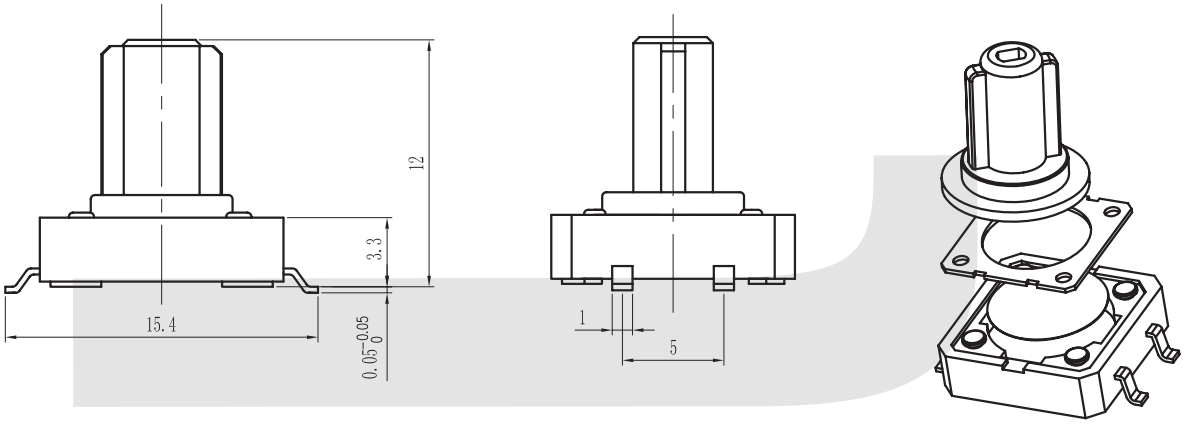

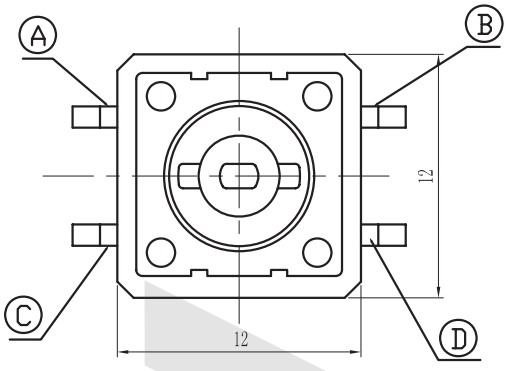

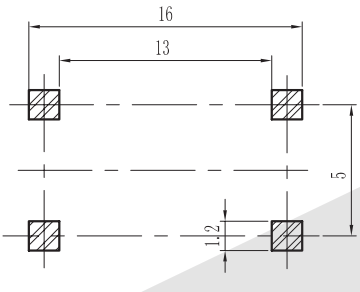

Recommended P.C.B layout

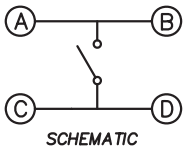

SCHEMATIC

ORDER INFORMATION

KLS7-TS1208 - H1-250 -B

- Part Number
- Hight: H1 = 12mm
- Operating Force :250~280gf
- Packing: B-Bulk

Tact Switch Series

KLS7-TS1213 12x12 Tact Switch Series

ELECTRICAL
1.Rating: 50mA 12VDC
2.Contact Resistance : 50mΩ Max.
3.Insulation Resistance: 100MΩ Min.
4.Dielectric Strength : AC250V(50/60Hz for 1minute)
5.Electrically Life: 80, 000cycles
6.Environment temperature:-25ºC~+70ºC
7.Operating Force: 250/280(±30gf)
8.Seal temperature:260ºC~ 280ºC

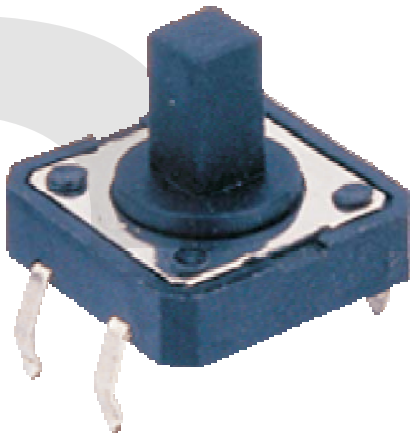

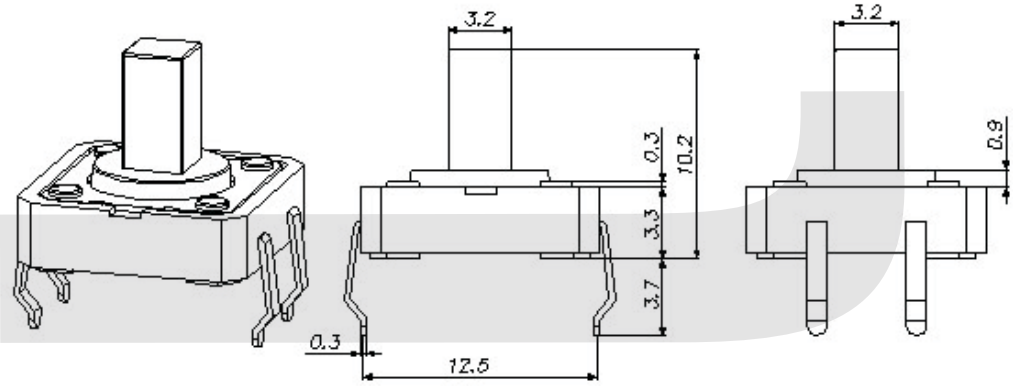

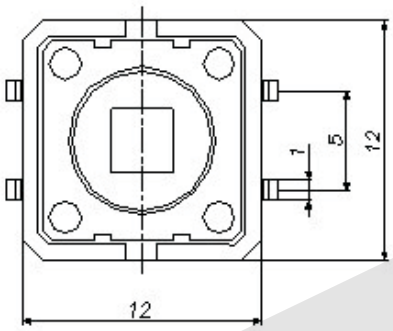

ORDER INFORMATION

KLS7-TS1213 - H1-250 -B

Part Number
Packing: B-Bulk
Operating Force :250~280gf
Hight: H1 = 10.2mm

Tact Switch Series

VII

KLS7-TS1214 12x12mm Tact Switch Series

ELECTRICAL

1.Rating: 50mA 12VDC
2.Contact Resistance : 50mΩ Max.
3.Insulation Resistance: 100MΩ Min.
4.Dielectric Strength : AC250V(50/60Hz for 1minute)
5.Electrically Life: 80, 000cycles
6.Environment temperature:-25ºC~+70ºC
7.Operating Force: 280±30gf
8.Seal temperature:260ºC~ 280ºC

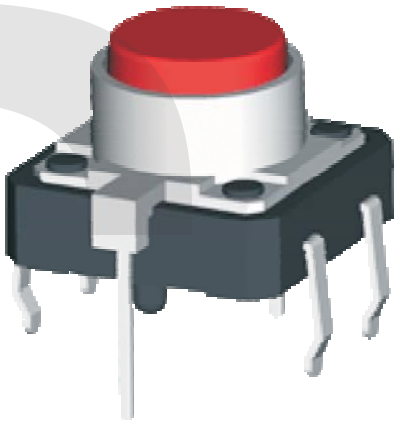

Dimension (unit: mm)

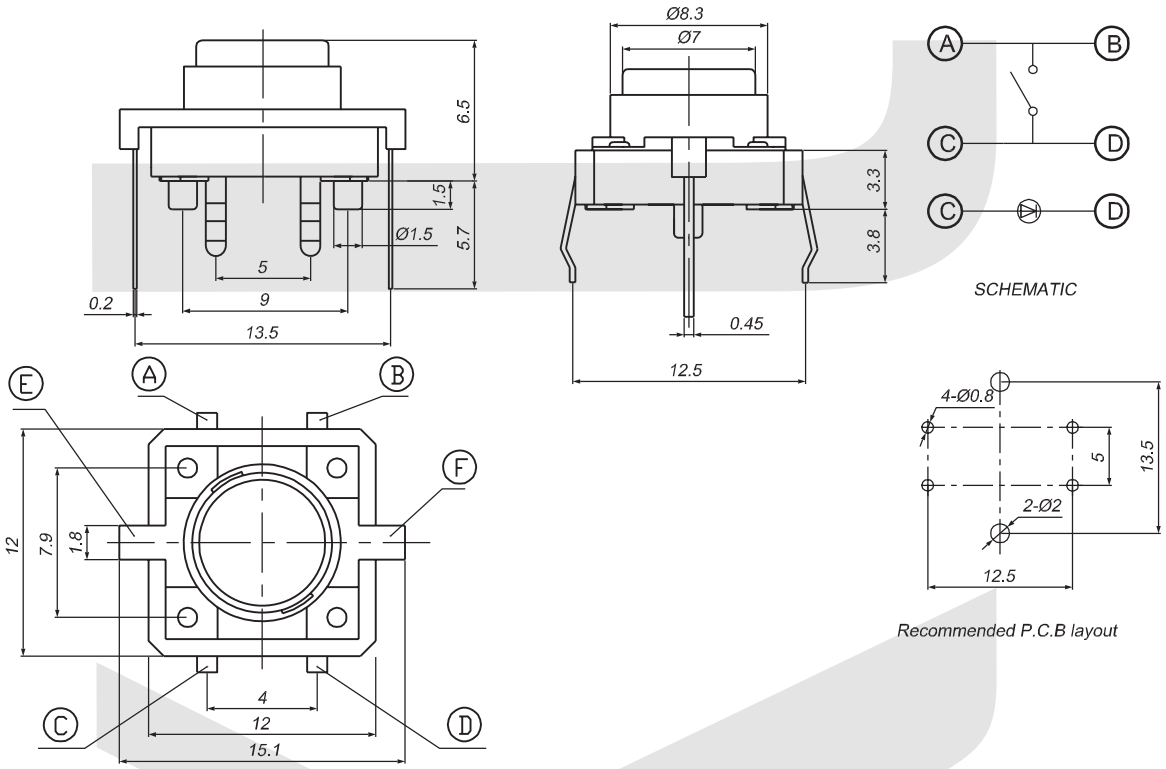

ORDER INFORMATION

KLS7-TS1214 -6.5-280-R

Series No.
High: 6.5mm

Color:R=Red Y=Yellow
G=Green B=Blue
Operating Force :280gf

DIP Switch Series

KLS7-TS1201

SPECIFICATIONS
Rating: 1A 125V AC
DIA: 8mm
Operating force: 100gf
Dielectric strength: AC 250 V 1 minute
Insulation resistance: 100 MΩ DC 250 V
Contact resistance: 30 MΩ Min.
Electrical life: 100,000 cycles
Operating temperature: -20oC ~ +60oC



FUNCTION:
OFF-(ON)
R: 11.4x10.3 mm
R1: 11.4x12.8 mm
B-Black G-Gray L- Blue R-Red

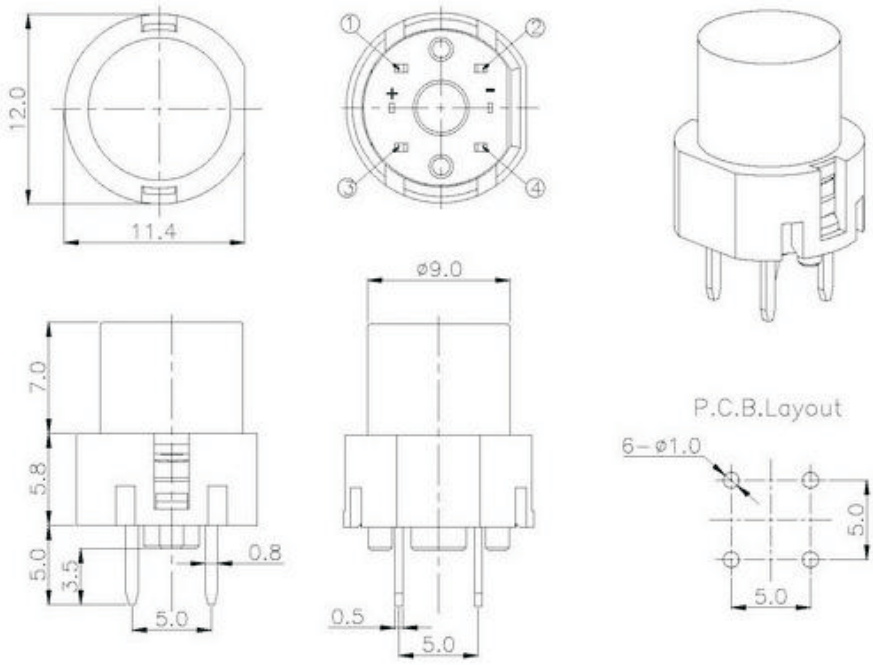

ORDER INFORMATION

DIP Switch Series

KLS7-TS1202

SPECIFICATIONS

Rating: 1A 125V AC
DIA: 8mm
Operating force: 100gf
Dielectric strength: AC 250 V 1 minute
Insulation resistance: 100 MΩ DC 250 V
Contact resistance: 30 MΩ Min.
Electrical life: 100,000 cycles
Operating temperature: -20oC ~ +60oC

FUNCTION:

OFF-(ON)
S: 11.4x10.3 mm
S1: 11.4x9.8 mm
B-Black G-Gray L- Blue R-Red

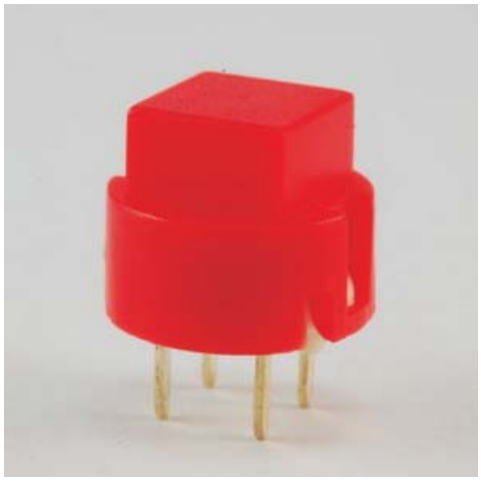

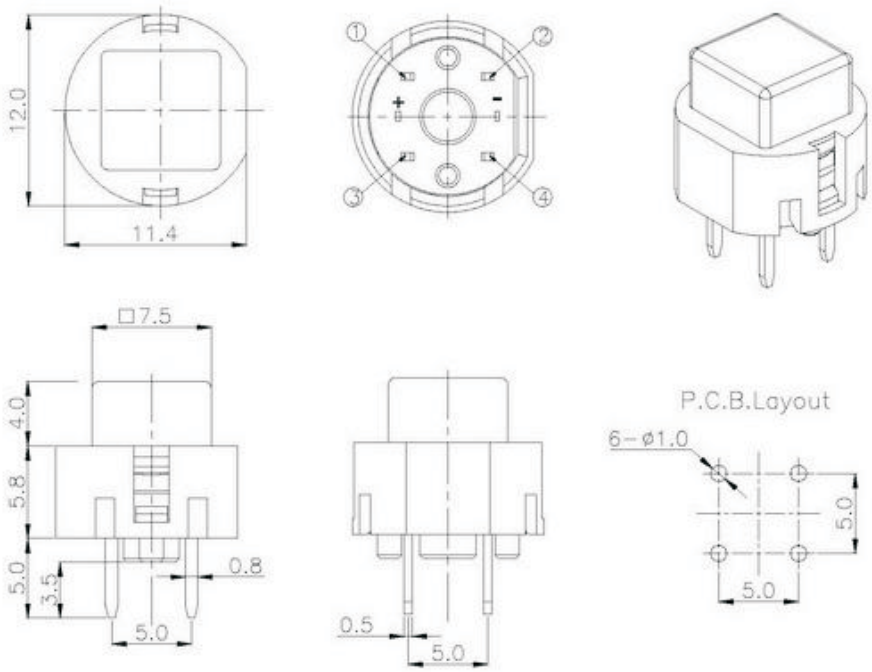

ORDER INFORMATION

DIP Switch Series

KLS7-TS6612(Water-proof)

SPECIFICATIONS

SIZE: 6*6mm
Rating:50mA 12 VDC
Contact Resistance:50MΩ Max(initial)
Insulation Resistance:100 MΩ (minDC 250V)
Dielectric Strengh:AC 250V/(50/60Hz for 1minute) ,
Electrical life:100000cycles
Environment Temp: -20℃-70℃
Operation Force :180/250(30gf)
Seal temperature:260℃-280℃



Height: H1=2.1mm H2=2.5mm H3=2.7mm H4=3.1mm H5=3.5mm H6=5.1mm

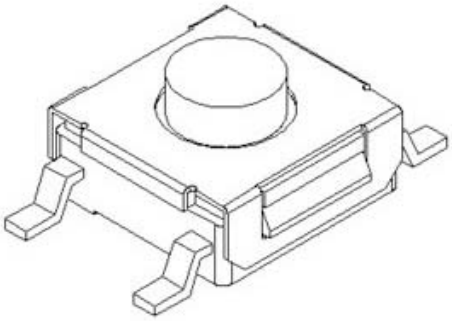

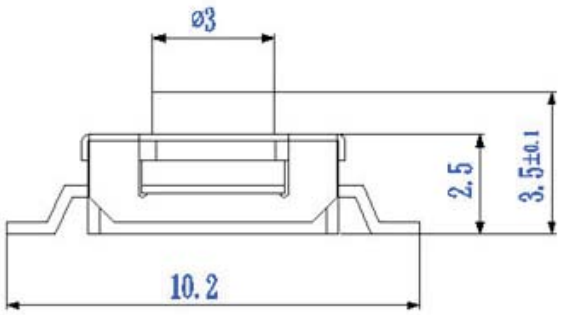

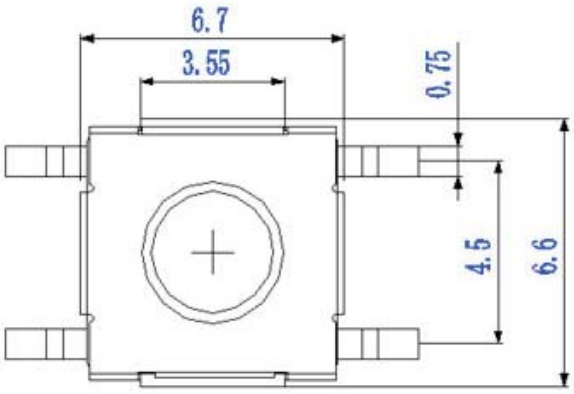

ORDER INFORMATION

DIP Switch Series

VII

KLS7-TS7701(Water-proof)

SPECIFICATIONS

SIZE: 7*7mm
Rating:50mA 12 VDC
Contact Resistance:50MΩ Max(initial)
Insulation Resistance:100 MΩ (minDC 250V)
Dielectric Strengh:AC 250V/(50/60Hz for 1minute) ,
Electrical life:100000cycles
Environment Temp: -25℃-70℃
Operation Force :180/250(30gf)
Seal temperature:260℃-280℃

Height: H1=5.0mm H2=9.9mm



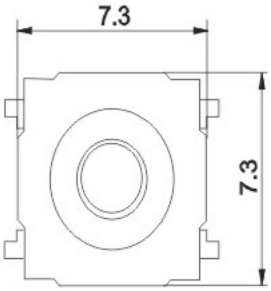

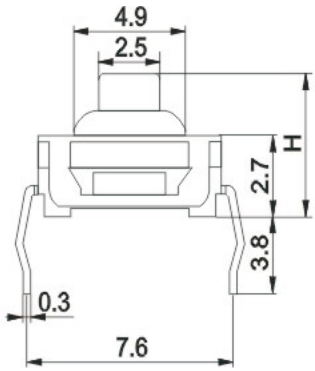

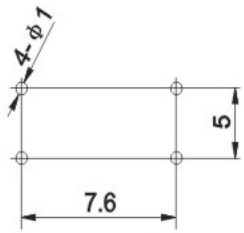

ORDER INFORMATION

DIP Switch Series

KLS7-TS7701C (Water-proof)

SPECIFICATIONS

SIZE: 7*7mm
Rating:50mA 12 VDC
Contact Resistance:50MΩ Max(initial)
Insulation Resistance:100 MΩ (minDC 250V)
Dielectric Strengh:AC 250V/(50/60Hz for 1minute) ,
Electrical life:100000cycles
Environment Temp: -20℃-70℃
Operation Force :180/250(30gf)
Seal temperature:260℃-280℃

Height: H1=5.0mm H2=9.9mm



ORDER INFORMATION

DIP Switch Series

KLS7-TS7703(Water-proof)

SPECIFICATIONS

SIZE: 7*7mm
Rating:50mA 12 VDC
Contact Resistance:50MΩ Max(initial)
Insulation Resistance:100 MΩ (minDC 250V)
Dielectric Strengh:AC 250V/(50/60Hz for 1minute) ,
Electrical life:100000cycles
Environment Temp: -25℃-70℃
Operation Force :180/250(30gf)
Seal temperature:260℃-280℃

Height: H1=5.0mm



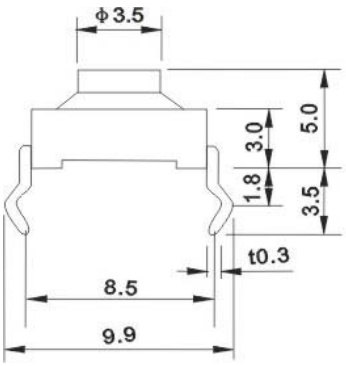

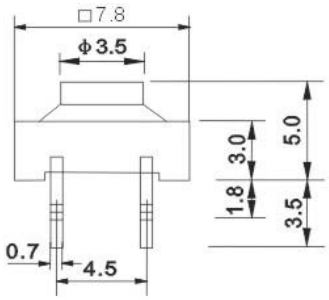

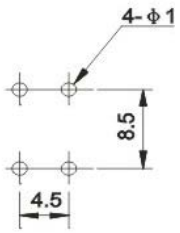

ORDER INFORMATION

DIP Switch Series

KLS7-TS7704(Water-proof)

SPECIFICATIONS

SIZE: 7*7mm
Rating:50mA 12 VDC
Contact Resistance:50MΩ Max(initial)
Insulation Resistance:100 MΩ (minDC 250V)
Dielectric Strengh:AC 250V/(50/60Hz for 1minute) ,
Electrical life:100000cycles
Environment Temp: -20℃-70℃
Operation Force :180/250(30gf)
Seal temperature:260℃-280℃

Height: H1=5.0mm H2=9.9mm



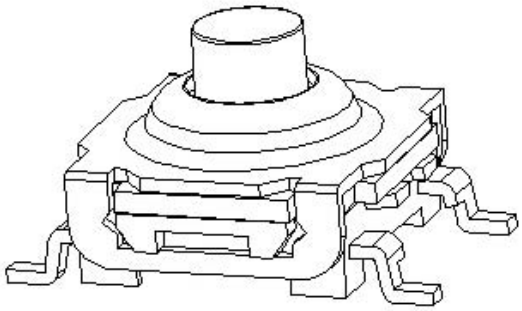

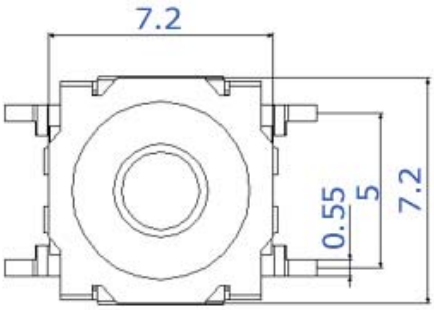

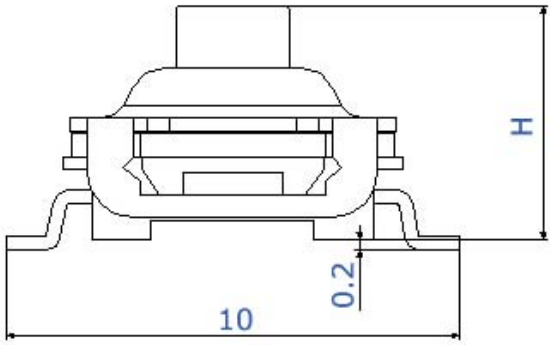

ORDER INFORMATION

KLS

3-Buttons,Switches-Компоненты коммутации: выключатели, переключатели, кнопки

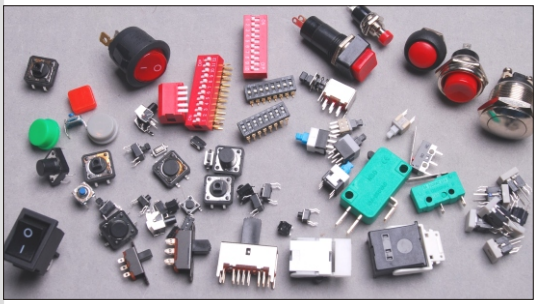

3-1	DIP switch
3-2	Tactile switch
3-3	**Hook switch**
3-4	Magnetic reed switches
3-5	Snap Action switches/Micro switches
3-6	Navigation joystick switches
3-7	Pushbutton switches
3-8	Rocker switches
3-9	Rotary switches
3-10	Slide switches

More . . .

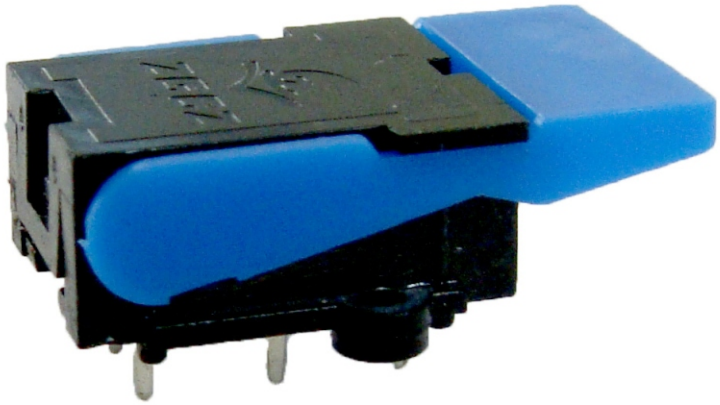

KLS ELECTRONIC CO; LTD. WWW.CNKLS.COM Email:sales@cnkls.com
Tel:0086 574 86824882 Fax:0086 574 86824882

DIP Switch Series

KLS7-HS12L01/1P2T

Specification:

TITLE HOOK SWITCH
KLS P/N: KLS7-HS12L01
Rating :0.2A 50V DC
Function:1P2T
Timing: NON-SHORTING

ContactResistance (mohms) :200mΩ max
Insulation Resistanc (Mohms):100mΩ min at 500V DC
Dielectric Strength(V): AC 500V for 1 min
LifeTest:100,000 Cycles



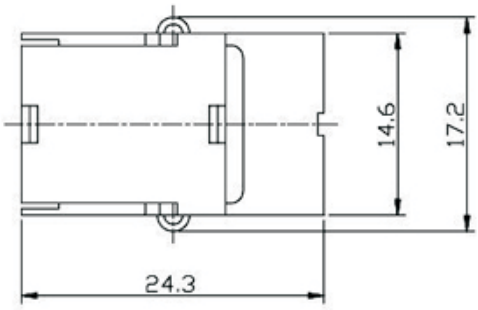

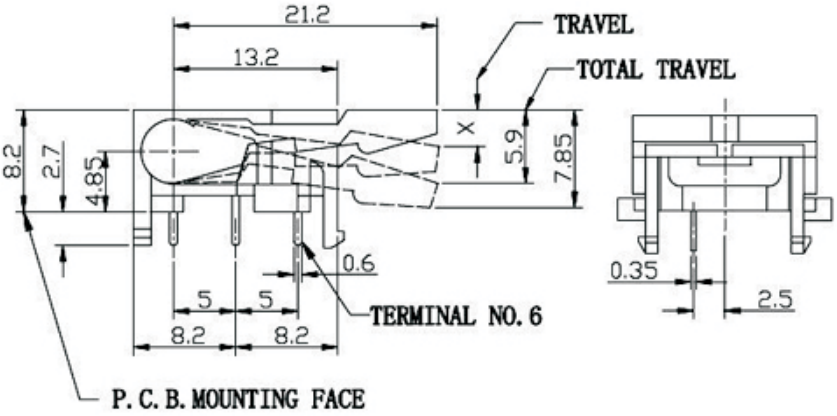

ORDER INFORMATION

Hook switches series

KLS7-HS12L02/1P2T

Specification:

TITLE HOOK SWITCH
KLS P/N: KLS7-HS12L02
Rating :0.2A 50V DC
Function:1P2T
Timing: NON-SHORTING

ContactResistance (mohms) :200mΩ max
Insulation Resistanc (Mohms):100mΩ min at 500V DC
Dielectric Strength(V): AC 500V for 1 min
LifeTest:100,000 Cycles

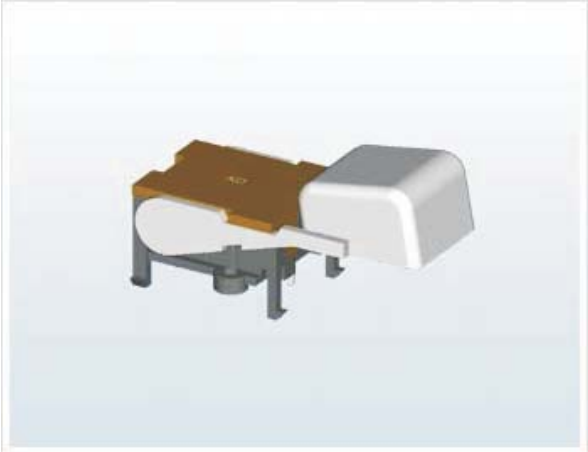

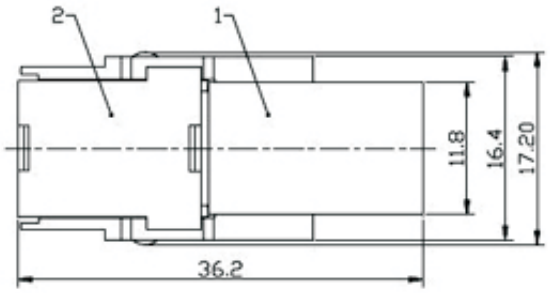

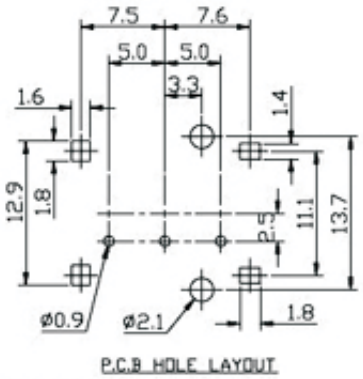

P.C.B HOLE LAYOUT

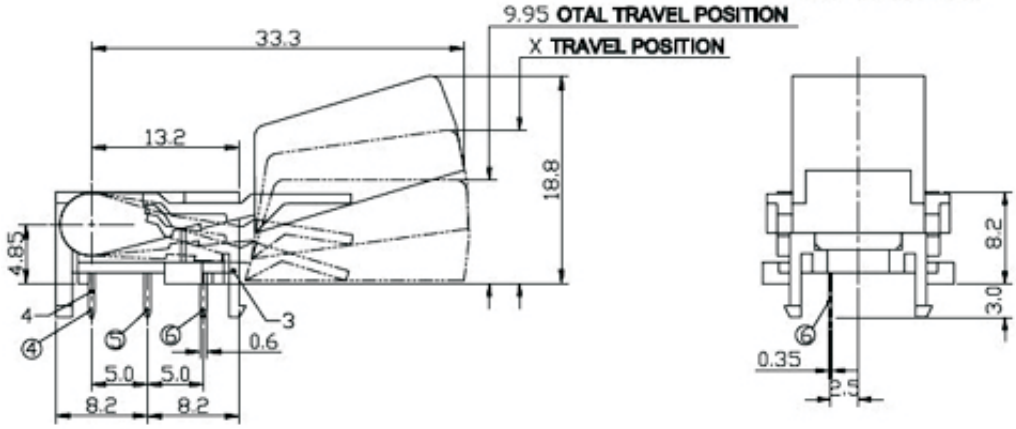

ORDER INFORMATION

Hook switches series

KLS7-HS12L03/1P2T

Specification:

TITLE HOOK SWITCH
KLS P/N: KLS7-HS12L03
Rating :0.2A 50V DC
Function:1P2T
Timing: NON-SHORTING

ContactResistance (mohms) :200mΩ max
Insulation Resistanc (Mohms):100mΩ min at 500V DC
Dielectric Strength(V): AC 500V for 1 min
LifeTest:100,000 Cycles

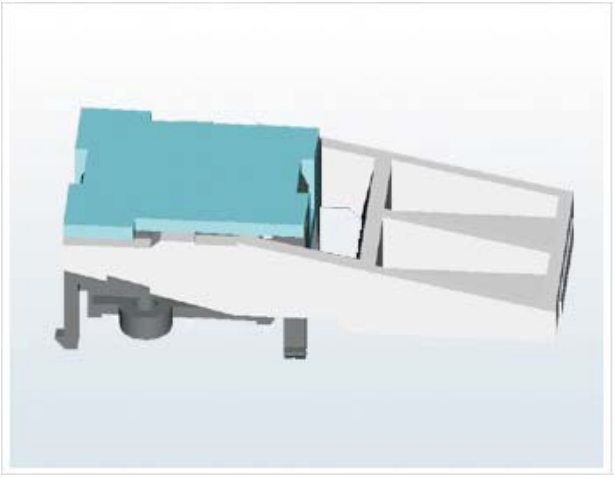

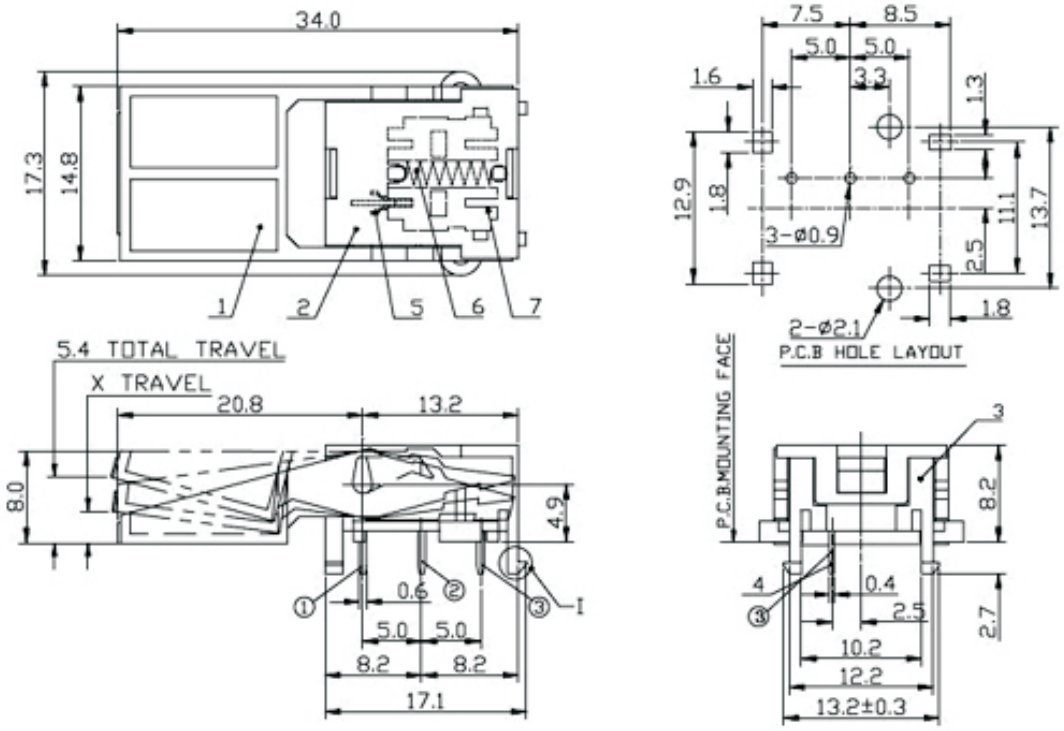

ORDER INFORMATION

Hook switches series

KLS7-HS22L01/2P2T

Specification:

TITLE HOOK SWITCH
KLS P/N: KLS7-HS22L01
Rating :0.2A 50V DC
Function:2P2T
Timing: NON-SHORTING

ContactResistance (mohms) :200mΩ max
Insulation Resistanc (Mohms):100mΩ min at 500V DC
Dielectric Strength(V): AC 500V for 1 min
LifeTest:100,000 Cycles

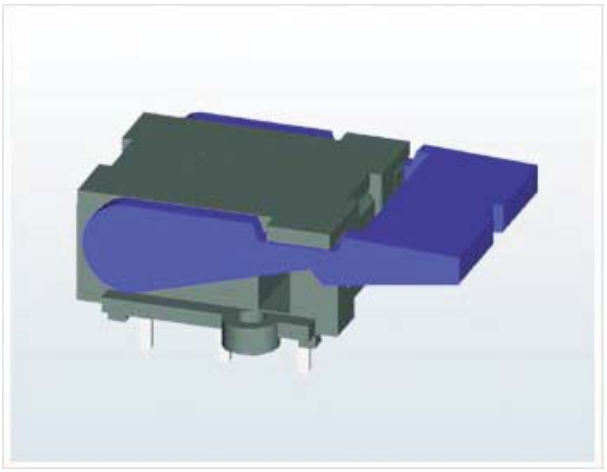

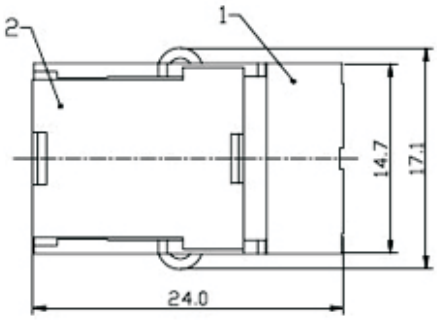

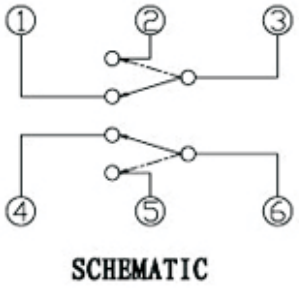

SCHEMATIC

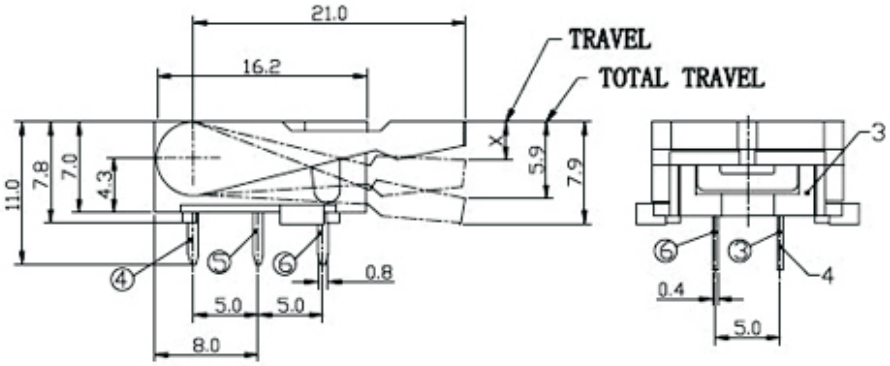

ORDER INFORMATION

Hook switches series

KLS7-HS22L02/2P2T

Specification:

TITLE HOOK SWITCH
KLS P/N: KLS7-HS22L02
Rating :0.2A 50V DC
Function:2P2T
Timing: NON-SHORTING

ContactResistance (mohms) :200mΩ max
Insulation Resistanc (Mohms):100mΩ min at 500V DC
Dielectric Strength(V): AC 500V for 1 min
LifeTest:100,000 Cycles

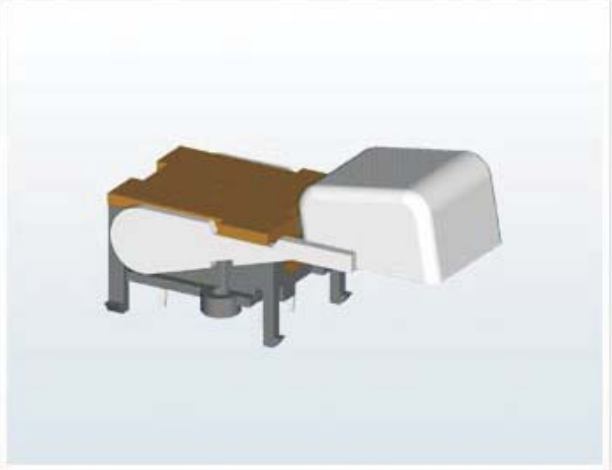

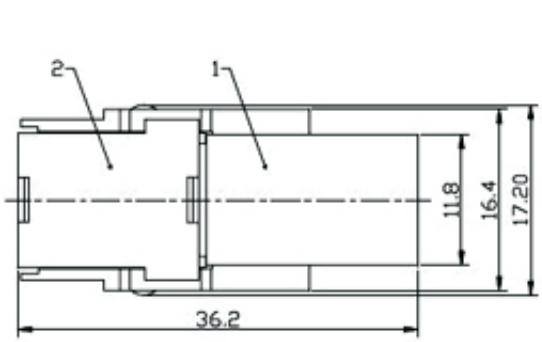

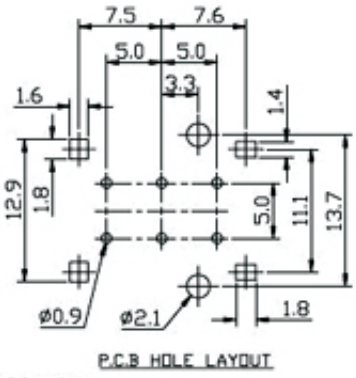

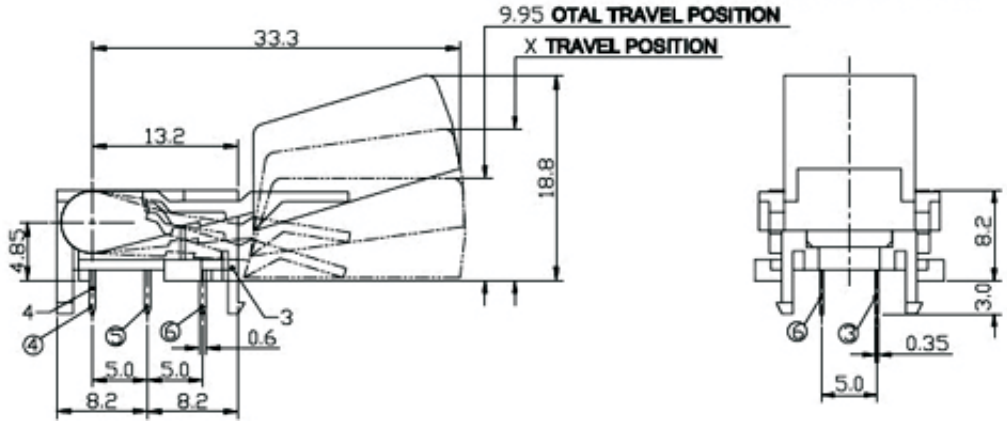

ORDER INFORMATION

Hook switches series

KLS7-HS22L03/2P2T

Specification:

TITLE HOOK SWITCH
KLS P/N: KLS7-HS22L03
Rating :0.2A 50V DC
Function:2P2T
Timing: NON-SHORTING

ContactResistance (mohms) :200mΩ max
Insulation Resistanc (Mohms):100mΩ min at 500V DC
Dielectric Strength(V): AC 500V for 1 min
LifeTest:100,000 Cycles

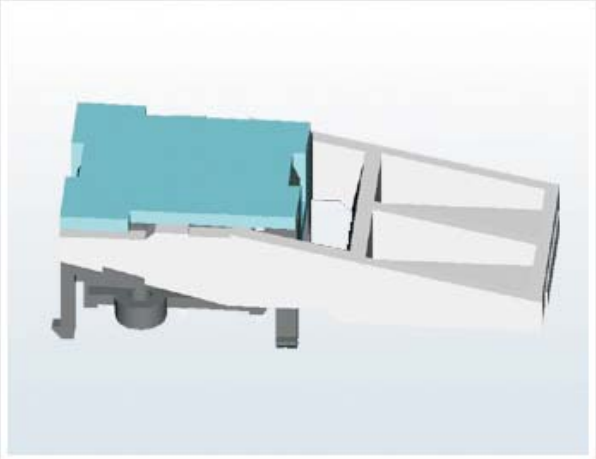

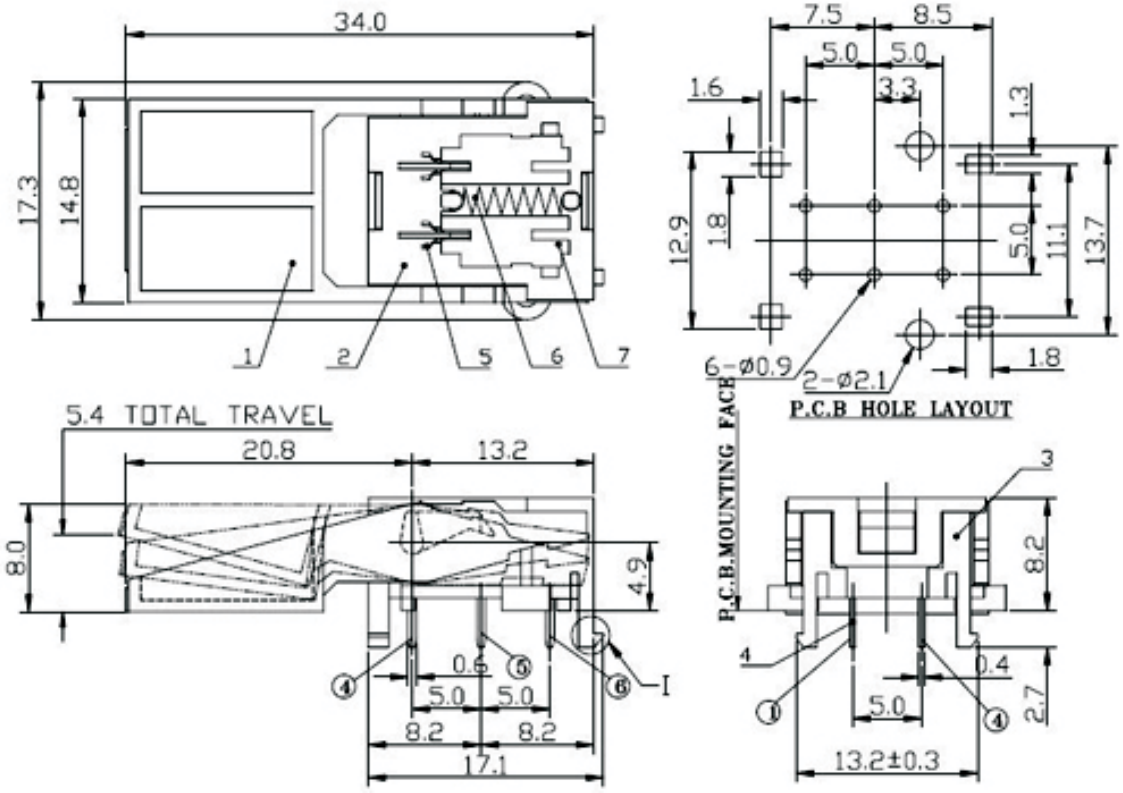

ORDER INFORMATION

Hook switches series

KLS7-HS22L04/2P2T

Specification:

TITLE HOOK SWITCH
KLS P/N: KLS7-HS22L04
Rating :0.2A 50V DC
Function:2P2T
Timing: NON-SHORTING
ContactResistance (mohms) :200mΩ max
Insulation Resistanc (Mohms):100mΩ min at 500V DC
Dielectric Strength(V): AC 500V for 1 min
LifeTest:100,000 Cycles

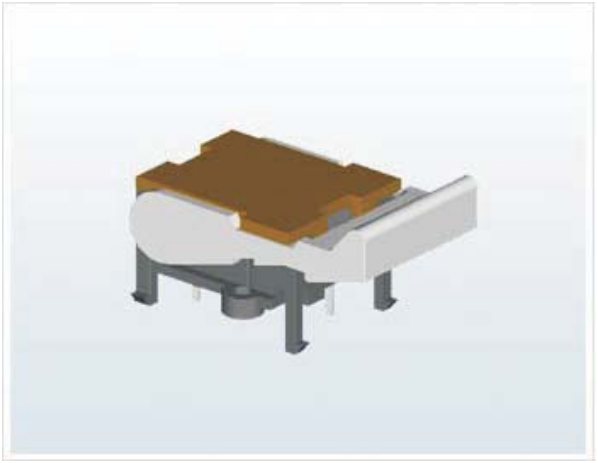

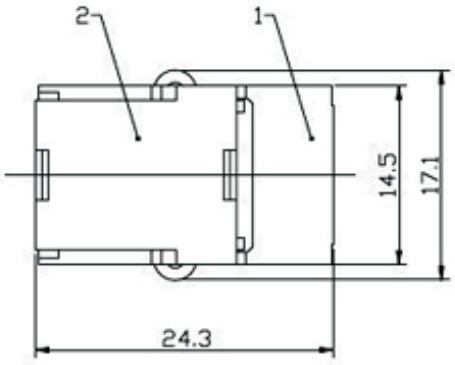

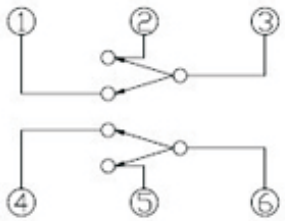

SCHEMATIC

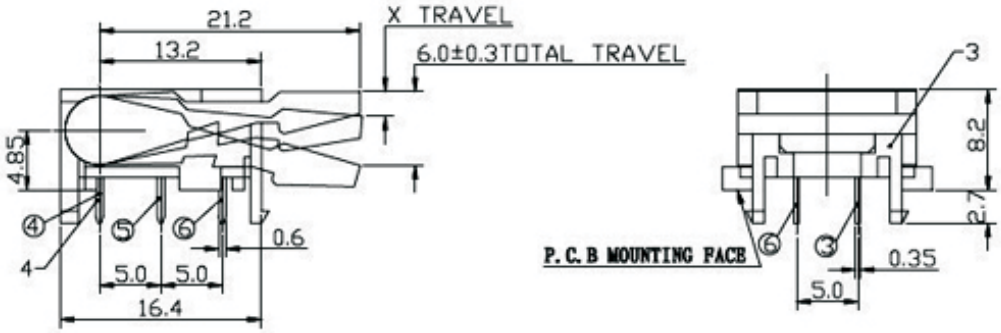

ORDER INFORMATION

Hook switches series

VII

KLS7-HS22L05/2P2T

Specification:

TITLE HOOK SWITCH
KLS P/N: KLS7-HS22L05
Rating :0.2A 50V DC
Function:2P2T
Timing: NON-SHORTING
ContactResistance (mohms) :200mΩ max
Insulation Resistanc (Mohms):100mΩ min at 500V DC
Dielectric Strength(V): AC 500V for 1 min
LifeTest:100,000 Cycles

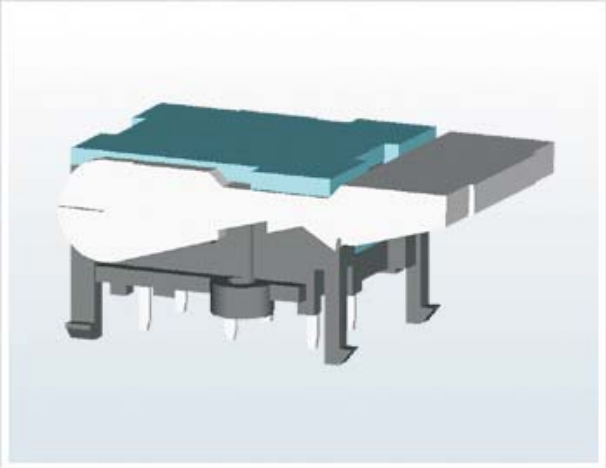

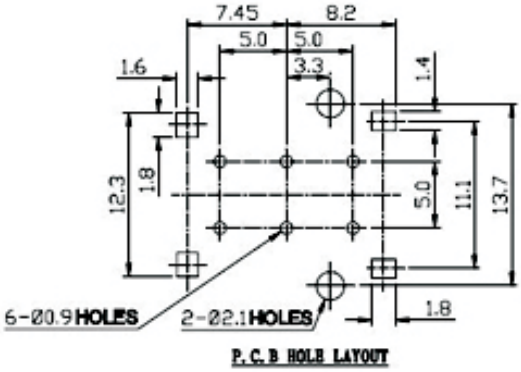

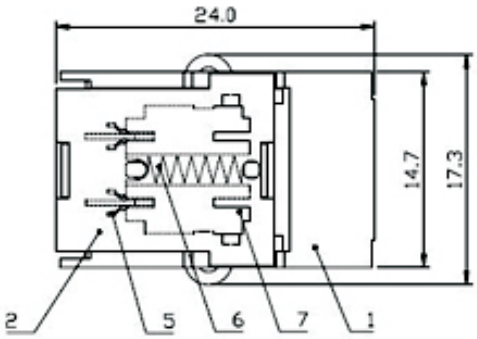

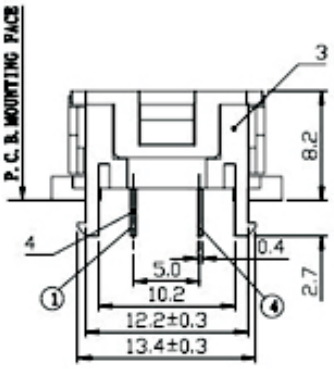

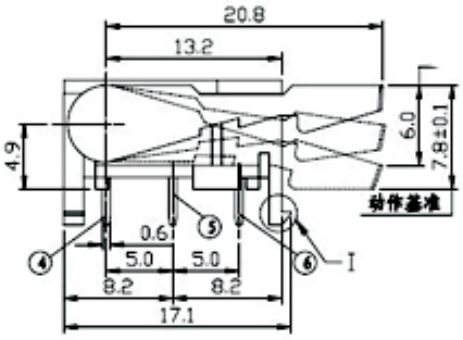

ORDER INFORMATION

Hook switches series

KLS7-HS22L06/2P2T

Specification:

TITLE HOOK SWITCH
KLS P/N: KLS7-HS22L06
Rating :0.2A 50V DC
Function:2P2T
Timing: NON-SHORTING
ContactResistance (mohms) :200mΩ max
Insulation Resistanc (Mohms):100mΩ min at 500V DC
Dielectric Strength(V): AC 500V for 1 min
LifeTest:100,000 Cycles



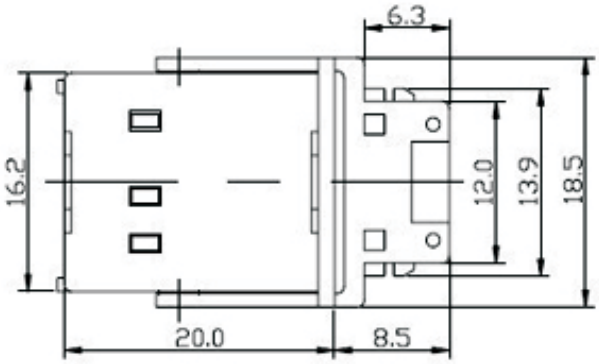

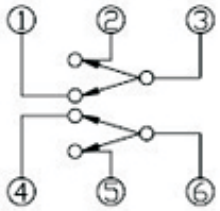

SCHEMATIC

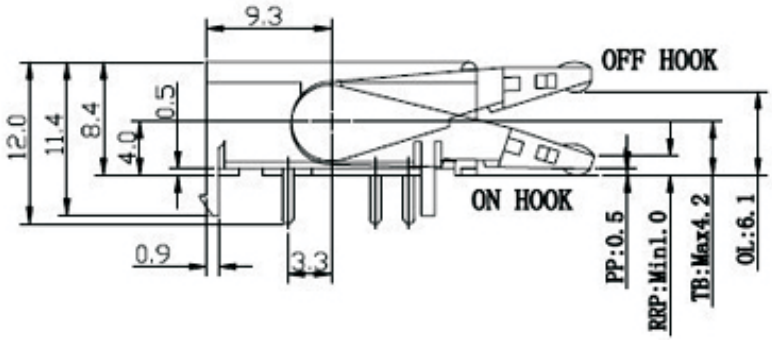

ORDER INFORMATION

Micro Switch Series

KLS7-KW10 Micro Switch Series

Action sensitive subminiature switch

Mini–type, big current. Characteristic: small contact gap, quick action, high sensitivity and small operating travel

Long life

A variety of contact terminals

A variety of levers

Widely used in home appliance, audio video device, computer, office automation equipment, communication equipment, etc.

Withstand Voltage: AC250V(50Hz) Min.

Temperature: -40°C~+70°C

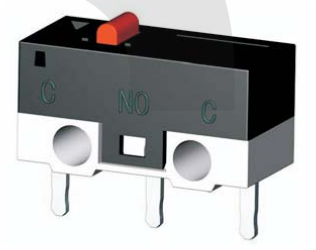

Specifications

Item		Value
Operating speed		1mm ~ 500mm/s (Related with actuator forms)
Operating frequency		Mechanical 60 cycles/min; Electrical 25cycles/min
Insulation resistance		≥100MΩ (500VDC)
Contact resistance		OF>0.75N: ≤30mΩ(see note) OF≤0.75N: ≤50mΩ(see note) KW10–D、E、F型: ≤100mΩ(見注)
Test voltage	Between terminals of the same polarity	AC600V,50/60Hz, 1min
	Between current–carrying metal parts and ground(case), and between each terminal and non–current–carrying metal parts.	AC1000V,50/60Hz, 1min
Vibration resistance		10 ~ 55Hz, 1.5mm Double amplitude
Shock resistance		Malfunction:300m/s²(approx.30G)max
Life expectancy		Mechanical ≥1,000,000 cycles Electrical ≥10,000cycles
Weight		Approx. 0.6g(No lever)
Safety approvals		UL、CUL、TUV、CE、EK、CQC

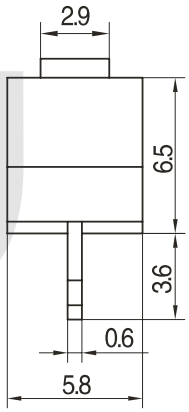

Internal configuration drawing

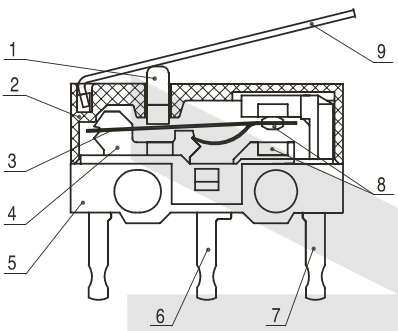

1: Plunger
2: Cover
3: Moving piece
4: Support
5: Case
6: NO terminal
7: NC terminal
8: Contact
9: Moving arm

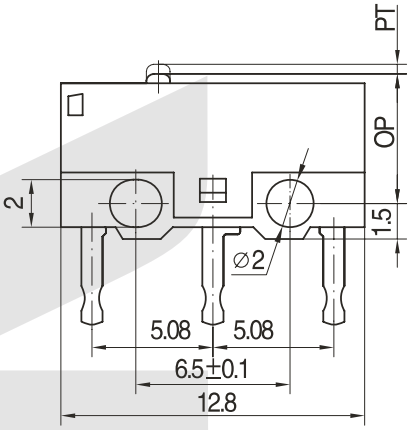

Micro Switch Series

KLS7-KW10 Micro Switch Series

ORDER INFORMATION

KLS7-KW10 - X X X X X - (X)

Part Number
Micro Switch Type

Rating:
No mark: 3(0.5) A250V / 3A125VAC
C : 1(0.5) A250V / 1A125VAC
D : 0.5(0.2) A250V / 0.5A125VAC
E : 0.3(0.1) A250V / 0.3A125VAC
F : 0.1(0.05) A250V / 0.1A125VAC

	Circuit
Z: SPDT	C NO NC — C NC NO
T: SPST-NO	C NO NC — C NO
D: SPST-NC	C NO NC — C NC

Additional spec numbers apply to:
when used not standard parts such as not standard terminal
when customer has particular operating value or other require ments.

Operating frce
045: 0.45N
075: 0.75N
150: 1.5N
250: 2.5N
Note: if it is not standard operating force, indicate with the upper limit

Terminal Types
F: Solder terminal
G: Long solder terminal
P: PCB terminal
L: Left side PCB terminal
R: Right side PCB terminal
S: Self-clinching PCB terminal
Y: Not standard terminal

Actuator forms
0: No lever
1: Short lever
2: Long lever
3: Middle lever
5: Roller
6: Long arc lever
8: Short arc lever
□: Not standard lever

◆ Terminal dimensions

PCB terminal

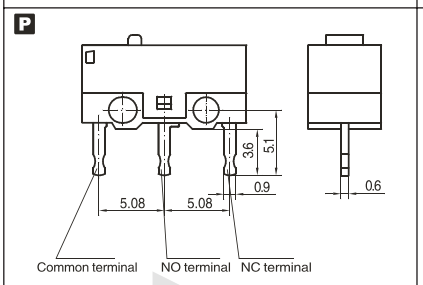

Long solder terminal

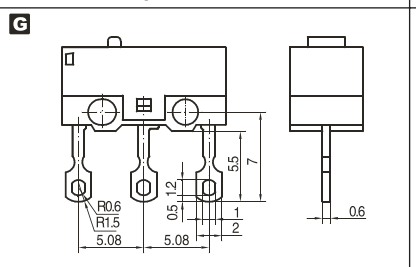

Self-clinching PCB terminal

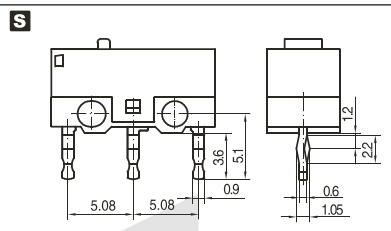

Left side PCB terminal

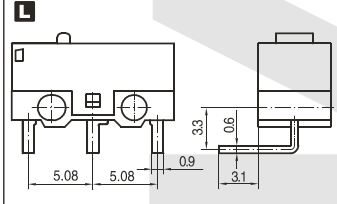

Right side PCB terminal

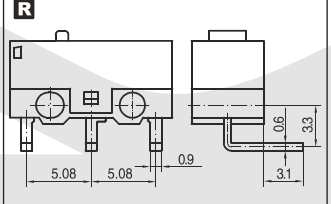

Solder terminal

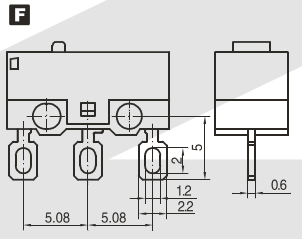

Minitype solder terminal

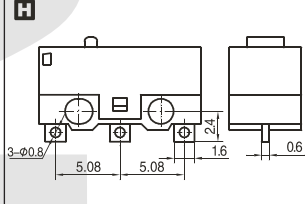

Micro Switch Series

KLS7-KW10 Micro Switch Series

◆ Mounting hole dimensions

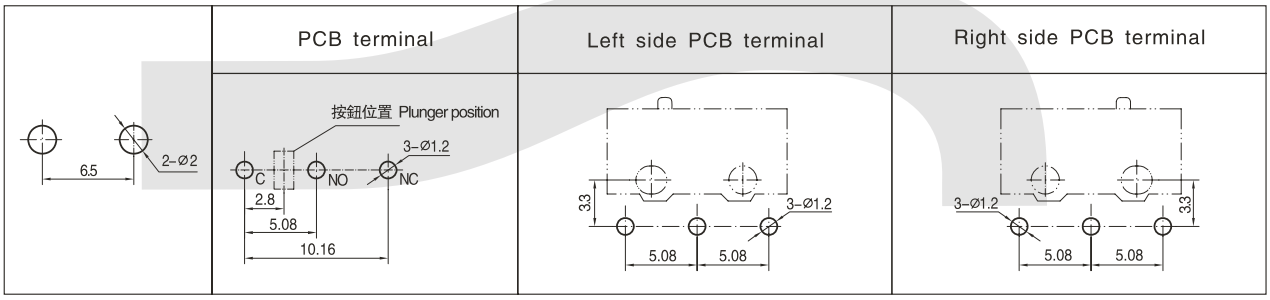

◆ Dimensions and operating characteristics

KW10-Z0P075
KW10-Z0P150
KW10-Z0P250



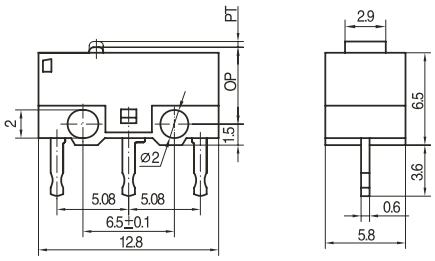

型號 Model	KW10-Z0P075	KW10-Z0P150	KW10-Z0P250
OF Max(N)	0.75	1.50	2.50
RF Min(N)	0.05	0.08	0.40
PT Max(mm)	0.5		
OT Min(mm)	0.2		
MD Max(mm)	0.2		
OP(mm)	5.5±0.3		

KW10-Z1P075
KW10-Z1P150
KW10-Z1P250



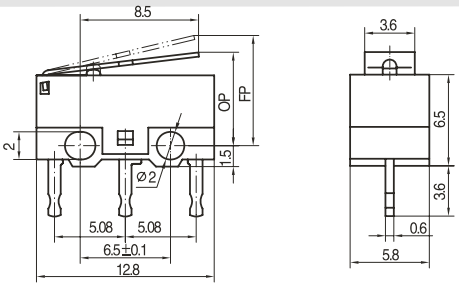

型號 Model	KW10-Z1P075	KW10-Z1P150	KW10-Z1P250
OF Max(N)	0.26	0.53	0.90
RF Min(N)	0.04	0.08	0.15
OT Min(mm)	0.6		
MD Max(mm)	0.6		
FP Max(mm)	9.0		
OP(mm)	6.7±1		

KW10-Z2P075
KW10-Z2P150
KW10-Z2P250



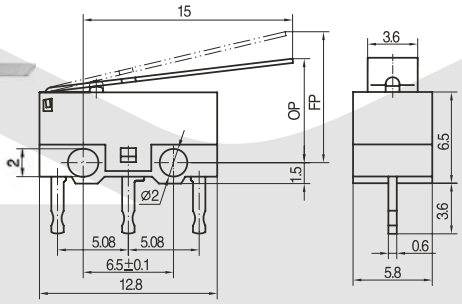

型號 Model	KW10-Z2P075	KW10-Z2P150	KW10-Z2P250
OF Max(N)	0.17	0.33	0.55
RF Min(N)	0.02	0.04	0.08
OT Min(mm)	1.0		
MD Max(mm)	1.0		
FP Max(mm)	10.0		
OP(mm)	7.6±1.5		

Micro Switch Series

KLS7-KW10 Micro Switch Series

KW10-Z3P075
KW10-Z3P150
KW10-Z3P250



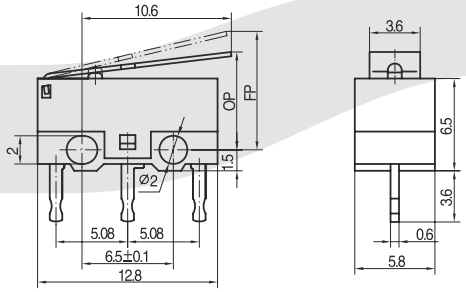

型號 Model	KW10-Z3P075	KW10-Z3P150	KW10-Z3P250
OF Max(N)	0.23	0.45	0.75
RF Min(N)	0.03	0.06	0.12
OT Min(mm)	0.7		
MD Max(mm)	0.7		
FP Max(mm)	9.5		
OP(mm)	7±1.2		

KW10-Z5P075
KW10-Z5P150
KW10-Z5P250



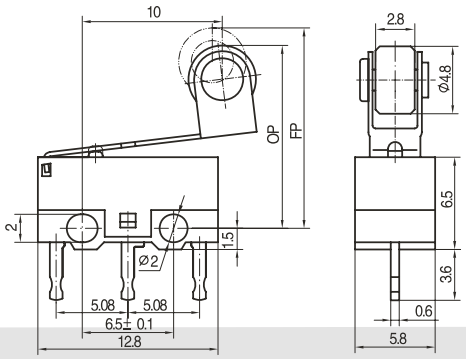

型號 Model	KW10-Z5P075	KW10-Z5P150	KW10-Z5P250
OF Max(N)	0.23	0.46	0.77
RF Min(N)	0.02	0.05	0.10
OT Min(mm)	0.7		
MD Max(mm)	0.7		
FP Max(mm)	16.5		
OP(mm)	13±1.5		

KW10-Z6P075
KW10-Z6P150
KW10-Z6P250



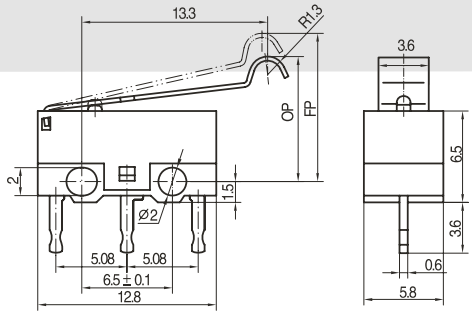

型號 Model	KW10-Z6P075	KW10-Z6P150	KW10-Z6P250
OF Max(N)	0.18	0.36	0.60
RF Min(N)	0.02	0.05	0.10
OT Min(mm)	0.9		
MD Max(mm)	0.9		
FP Max(mm)	11.5		
OP(mm)	8.6±1		

KW10-Z8P075
KW10-Z8P150
KW10-Z8P250



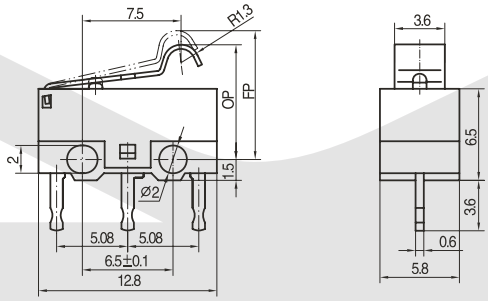

型號 Model	KW10-Z8P075	KW10-Z8P150	KW10-Z8P250
OF Max(N)	0.30	0.60	1.00
RF Min(N)	0.03	0.06	0.12
OT Min(mm)	0.6		
MD Max(mm)	0.6		
FP Max(mm)	10.5		
OP(mm)	8.6±1		

Micro Switch Series

KLS7-KW10 Micro Switch Series

KW10-ZEP075
KW10-ZEP150
KW10-ZEP250



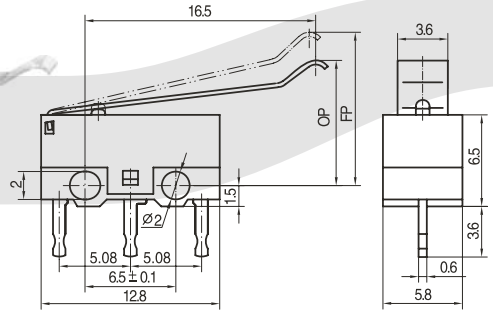

型號 Model	KW10-ZEP075	KW10-ZEP150	KW10-ZEP250
OF Max(N)	0.15	0.30	0.50
RF Min(N)	0.02	0.05	0.10
OT Min(mm)	1.1		
MD Max(mm)	1.0		
FP Max(mm)	11.5		
OP(mm)	8.5±1.5		

KW10-ZBP075
KW10-ZBP150
KW10-ZBP250



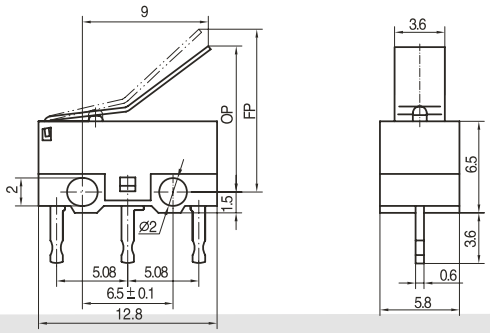

型號 Model	KW10-ZBP075	KW10-ZBP150	KW10-ZBP250
OF Max(N)	0.25	0.50	0.80
RF Min(N)	0.02	0.05	0.10
OT Min(mm)	0.6		
MD Max(mm)	0.6		
FP Max(mm)	12.5		
OP(mm)	10.5±1.5		

Micro Switch Series

KLS7-KW3-OZ Micro Switch Series

Features

Small contact clearance, high sensitivity
Snap action, high precision and high repeat accuracy
Flexible operating travel, wide range of operating force
Wide variety of terminal types
Wide variety of actuator forms
Adopt flame-retarded and fiber enhanced thermoplastics
Long life cycles, high reliability
Various approvals

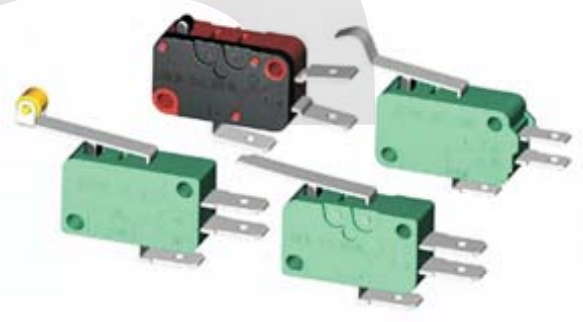

Application

Widely applied in home appliances, medical devices, office facility, instrument and apparatus, electric motion tools, packing machinery, auto electronics etc.

Examples: vending machines, gaming machines, coffee machines, dishwashers, dryers, washing machines, microwave ovens, Central water heating, vacuum cleaners, water pump, projecting apparatus, industrial automations etc.

Specifications

Items		Value
Operating speed		0.1mm~1m/S
Operating Frequency		Mechanical 60cycles/min;
		Electrical 25cycles/min
Insulation resistance		≥100MΩ (DC500V)
Contact resistance		≤30mΩ (Initial value)
Test voltage	Between terminals of same polarity	AC1500V 50/60HZ
	Between current-carrying metal parts and ground (case)	AC3750V 50/60HZ
Vibration resistance		10～55 HZ 1.5mm Double amplitude
Shock resistance		Destruction: OF＞0.5N: 1000m/S2 (approx.100G) Max OF≤0.5N: 400m/S2 (approx.40G) Max
		Malfunction: OF＞0.5N: 200m/S2 (approx.20G) Max OF≤0.5N: 100m/S2 (approx.10G) Max
Life expectancy		Mechanical≥2000000cycles
		Electrical≥50000cycles
Degree of protection against electric		Class Ⅰ/Class Ⅱ
PTI		175
Approvals		UL CUL VDE TUV CE DEMKO CQC

Micro Switch Series

KLS7-KW3-OZ Micro Switch Series

ORDER INFORMATION

KLS7-KW3-OZ- X X X X X X X - X

Part Number

Micro Switch Type

Outline characteristic
- A:NO.1 Form
- B:NO.2 Form
- C:NO.3 Form
- D:Combined Micro switch

Circuit
- 1:SPDT SP change-over
- 2:SPDT-NO
- 3:SPDT-NC

Termination
- 1: 250 Quick connect Terminal 6.3x0.8mm
- 2: 187 Quick connect Terminal 4.8x0.8mm
- 3: 187 Quick connect Terminal 4.8x0.5mm
- 4: Solder Terminal
- 5: PCB terminal
- 0: Non-standard terminal

Plunger catagory
- 1:2 mm
- 2:2.5 mm
- 3:3 mm
- 4:3.2 mm
- 5: Round Plunger
- 0: Special Plunger

Actuator forms (Levers)
- Refer to lever list
- L1
- L2
- L3
- ... ...

Degree of temperature
- 1: T55
- 2: T85
- 3: T120

Electrical ratings
- 1:16 A 125/250VAC
- 2:6 A 125/250VAC
- 3:16 (6) A 125/250VAC
- 4:10 (3) A 250VAC
- 5:6 (3) A 250VAC

Base colour
- 0: Green
- 1: Black
- 2: Brown
- 3: Red

Outline Characteristic

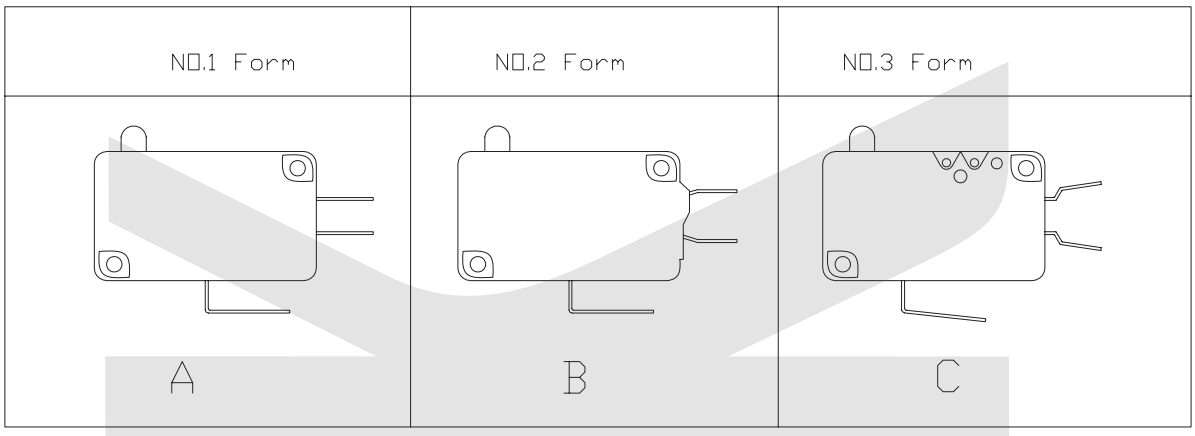

Micro Switch Series

KLS7-KW3-OZ Micro Switch Series

Circuit Illustration

	SPDT 1	SPST-NO 2	SPST-NC 3
Bottom common terminal	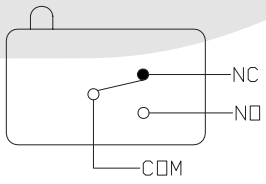	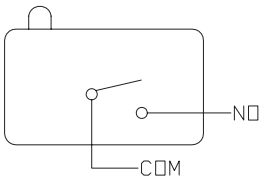	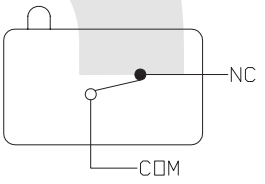
Side common terminal	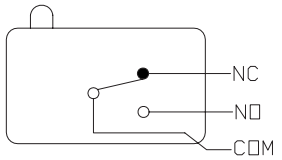	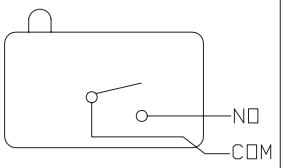	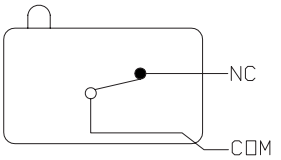

Termination

250 standard terminal 6.3×0.8	250 standard terminal 4.8×0.8	250 standard terminal 4.8×0.5
1 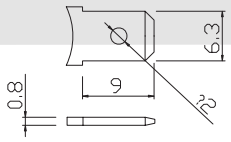	2 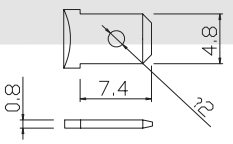	3 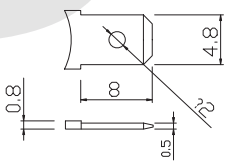

Actuator Forms(Levers)

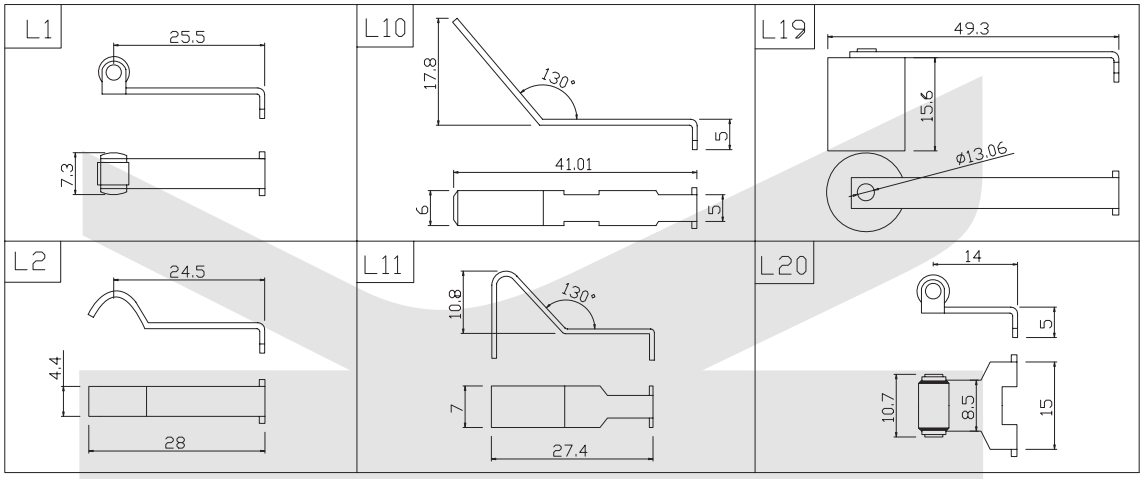

Micro Switch Series

KLS7-KW3-OZ Micro Switch Series

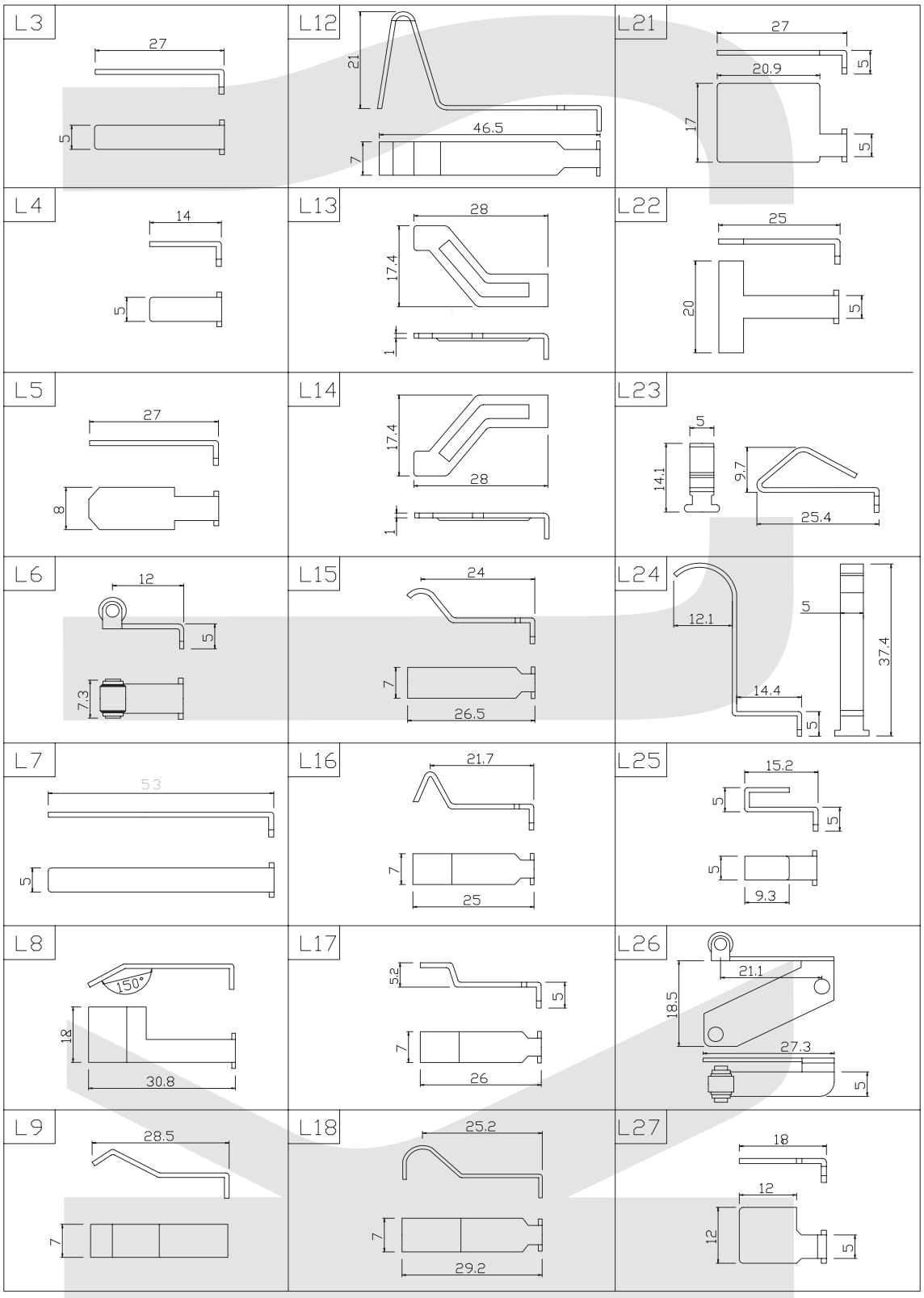

Micro Switch Series

KLS7-KW3-OZ Micro Switch Series



KLS7-KW3-□Z-A133013L

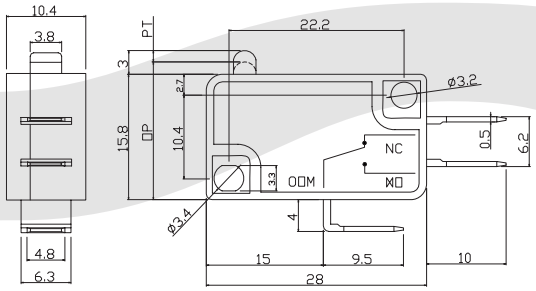

Model	KLS7-KW3-□Z-A133013L
□F (N)	0.3~4.5
MD Max(mm)	0.2
PT Max(mm)	2.3
□P Min(mm)	16.5



KLS7-KW3-□Z-A123013L

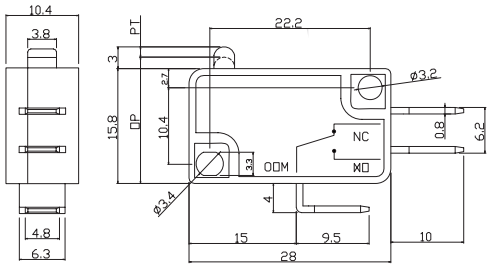

Model	KLS7-KW3-□Z-A123013L
□F (N)	0.3~4.5
MD Max(mm)	0.2
PT Max(mm)	2.3
□P Min(mm)	16.5

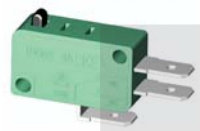

KLS7-KW3-□Z-A113013L

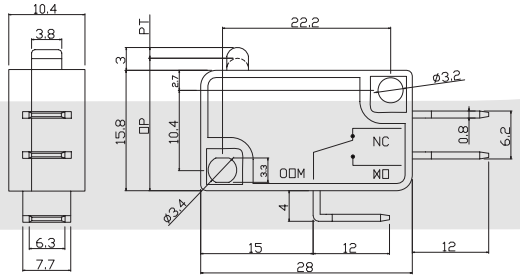

Model	KLS7-KW3-□Z-A113013L
□F (N)	0.3~4.5
MD Max(mm)	0.2
PT Max(mm)	2.3
□P Min(mm)	16.5



KLS7-KW3-□Z-A113013

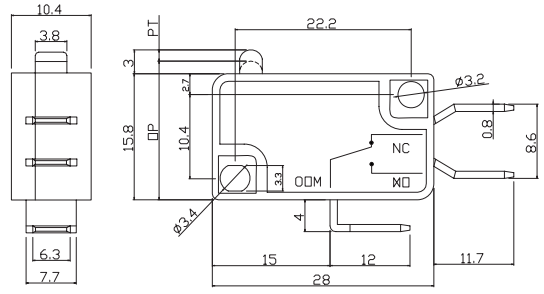

Model	KLS7-KW3-□Z-A113013
□F (N)	0.3~4.5
MD Max(mm)	0.2
PT Max(mm)	2.3
□P Min(mm)	16.5



KLS7-KW3-□Z-A223013L

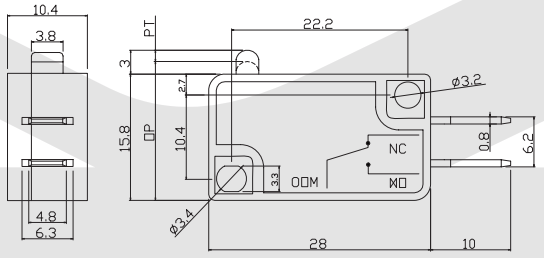

Model	KLS7-KW3-□Z-A223013L
□F (N)	0.3~4.5
MD Max(mm)	0.2
PT Max(mm)	2.3
□P Min(mm)	16.5

Micro Switch Series

KLS7-KW3-OZ Micro Switch Series



KLS7-KW3-□Z-A143013L

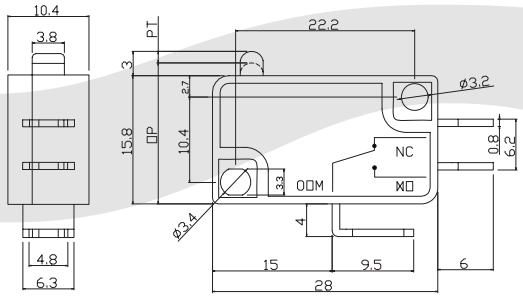

Model	KLS7-KW3-□Z-A143013L
OF (N)	0.3~4.5
MD Max(mm)	0.2
PT Max(mm)	2.3
OP Min(mm)	16.5



KLS7-KW3-□Z-A103013L

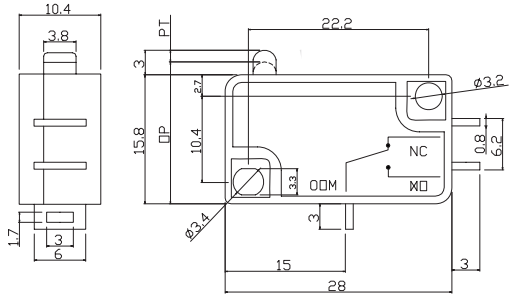

Model	KLS7-KW3-□Z-A103013L
OF (N)	0.3~4.5
MD Max(mm)	0.2
PT Max(mm)	2.3
OP Min(mm)	16.5



KLS7-KW3-□Z-A103013L9

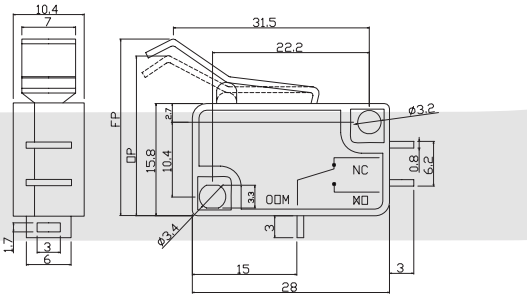

Model	KLS7-KW3-□Z-A103013L9
OF (N)	0.3~4.5
MD Max(mm)	0.4
PT Max(mm)	25.3
OP Min(mm)	21.0

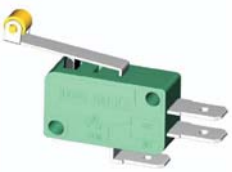

KLS7-KW3-□Z-A113013L1

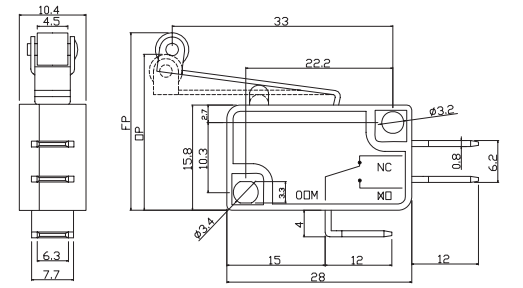

Model	KLS7-KW3-□Z-A113013L1
OF (N)	0.3~4.5
MD Max(mm)	0.5
PT Max(mm)	26.0
OP Min(mm)	21.0

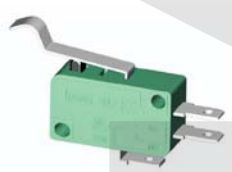

KLS7-KW3-□Z-A123013L2

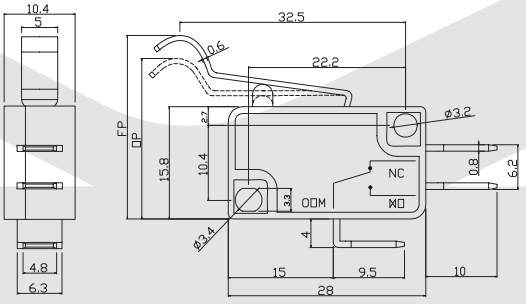

Model	KLS7-KW3-□Z-A123013L2
OF (N)	0.3~4.5
MD Max(mm)	0.5
PT Max(mm)	25.3
OP Min(mm)	21.0

Micro Switch Series

KLS7-KW3-OZ Micro Switch Series

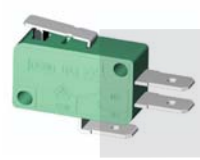

KLS7-KW3-□Z-A113013L4

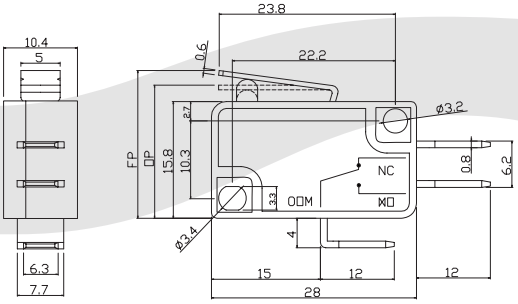

Model	KLS7-KW3-□Z-A113013L4
□F (N)	0.3~4.5
MD Max(mm)	0.3
PT Max(mm)	19.8
□P Min(mm)	17.0

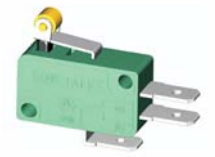

KLS7-KW3-□Z-A113033L6

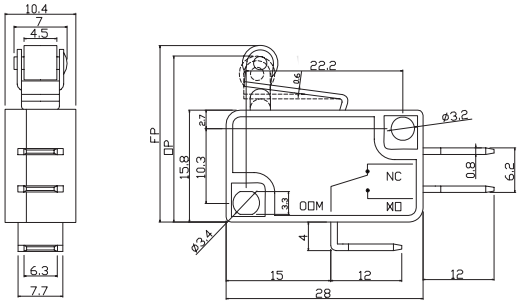

Model	KLS7-KW3-□Z-A113033L6
□F (N)	0.3~4.5
MD Max(mm)	0.3
PT Max(mm)	25.0
□P Min(mm)	22.8

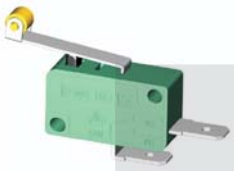

KLS7-KW3-□Z-A213013L1

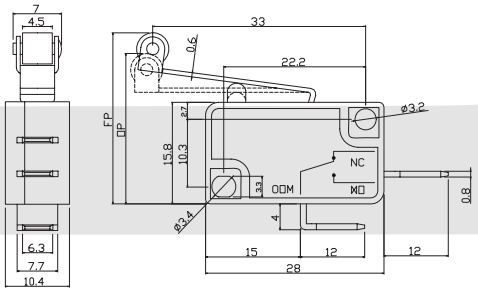

Model	KLS7-KW3-□Z-A213013L1
□F (N)	0.3~4.5
MD Max(mm)	0.5
PT Max(mm)	26.0
□P Min(mm)	21.0



KLS7-KW3-□Z-A113013L3

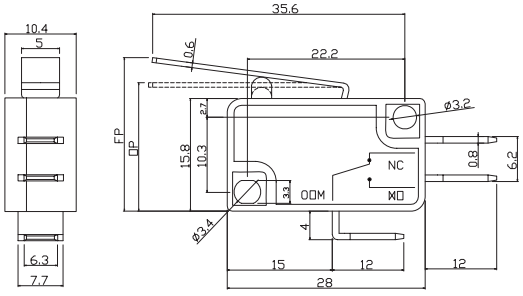

Model	KLS7-KW3-□Z-A113013L3
□F (N)	0.3~4.5
MD Max(mm)	0.5
PT Max(mm)	22.5
□P Min(mm)	16.5



KLS7-KW3-□Z-A113013L5

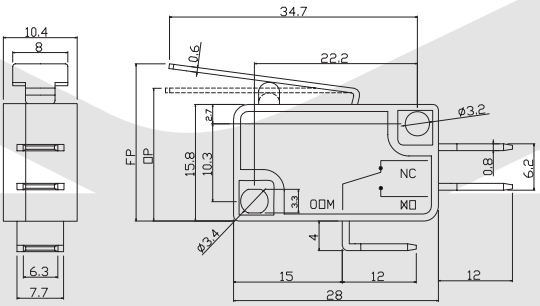

Model	KLS7-KW3-□Z-A113013L5
□F (N)	0.3~4.5
MD Max(mm)	0.5
PT Max(mm)	21.0
□P Min(mm)	16.5

Micro Switch Series

KLS7-KW3-OZ Micro Switch Series



KLS7-KW3-□Z-A143013L26

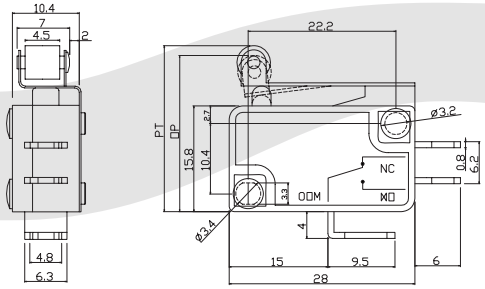

Model	KLS7-KW3-□Z-A143013L26
□F (N)	0.3~4.5
MD Max(mm)	0.3
PT Max(mm)	25.0
□P Min(mm)	22.0



KLS7-KW3-□Z-A103013L10

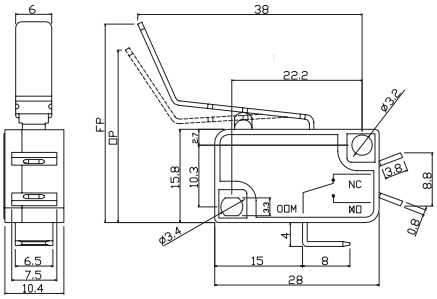

Model	KLS7-KW3-□Z-A103013L10
□F (N)	0.3~4.5
MD Max(mm)	0.8
PT Max(mm)	38.0
□P Min(mm)	22.8



KLS7-KW3-□Z-A150013L

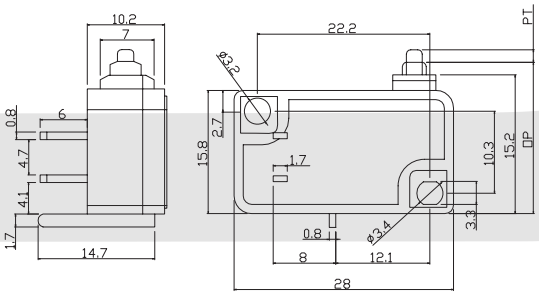

Model	KLS7-KW3-□Z-A150013L
□F (N)	0.3~4.5
MD Max(mm)	0.2
PT Max(mm)	1.8
□P Min(mm)	19.5



KLS7-KW3-□Z-A113013L7

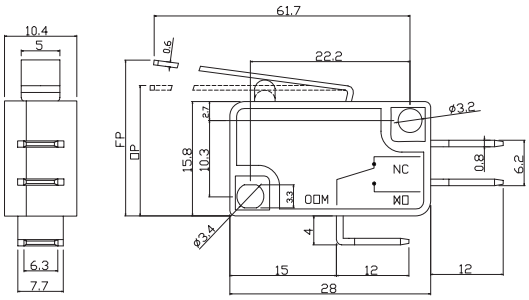

Model	KLS7-KW3-□Z-A113013L7
□F (N)	0.3~4.5
MD Max(mm)	1.2
PT Max(mm)	25
□P Min(mm)	14.3



KLS7-KW3-□Z-A213013L12

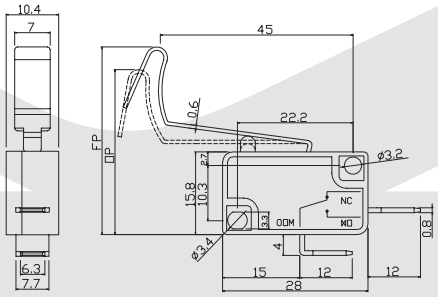

Model	KLS7-KW3-□Z-A213013L12
□F (N)	0.3~4.5
MD Max(mm)	1.0
PT Max(mm)	44.6
□P Min(mm)	38.0

Micro Switch Series

KLS7-KW3-OZ Micro Switch Series



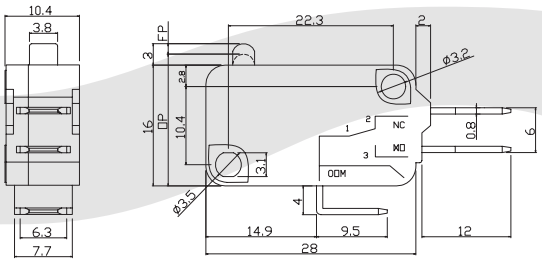

KLS7-KW3-□Z-B133013L

Model	KLS7-KW3-□Z-B133013L
□F (N)	0.3~4.5
MD Max(mm)	0.2
PT Max(mm)	2.0
□P Min(mm)	17.0



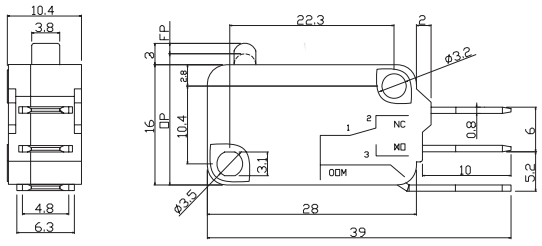

KLS7-KW3-□Z-B123013L

Model	KLS7-KW3-□Z-B123013L
□F (N)	0.3~4.5
MD Max(mm)	0.2
PT Max(mm)	2.0
□P Min(mm)	17.0

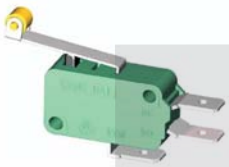

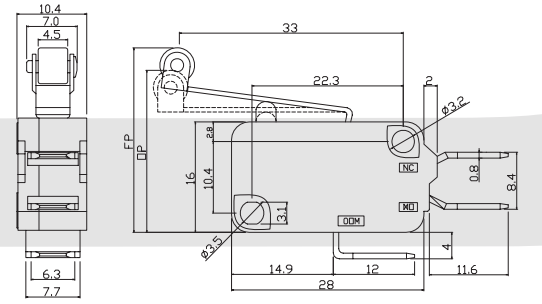

KLS7-KW3-□Z-B113013L1

Model	KLS7-KW3-□Z-B113013L1
□F (N)	0.3~4.5
MD Max(mm)	0.3
PT Max(mm)	26.0
□P Min(mm)	21.0



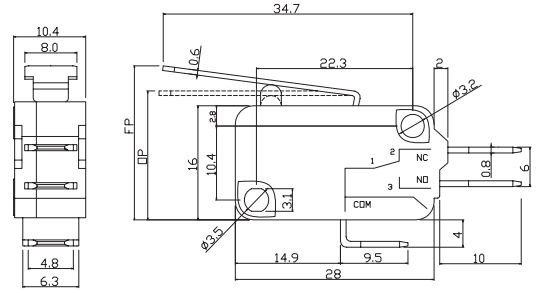

KLS7-KW3-□Z-B123013L5

Model	KLS7-KW3-□Z-B123013L5
□F (N)	0.3~4.5
MD Max(mm)	0.3
PT Max(mm)	21.0
□P Min(mm)	16.5



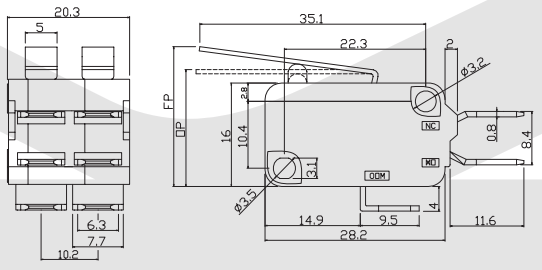

KLS7-KW3-□Z-D113013L3

Model	KLS7-KW3-□Z-D113013L3
□F (N)	0.3~4.5
MD Max(mm)	0.8
PT Max(mm)	24.5
□P Min(mm)	21.0

Micro Switch Series

KLS7-KW3-OZ Micro Switch Series



KLS7-KW3-□Z-D203013L2

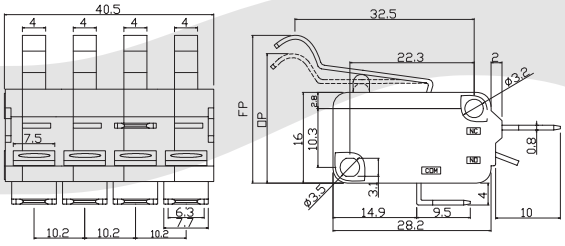

Model	KLS7-KW3-□Z-D203013L2
□F (N)	0.3~4.5
MD Max(mm)	0.8
PT Max(mm)	24.5
□P Min(mm)	21.0



KLS7-KW3-□Z-C113233L

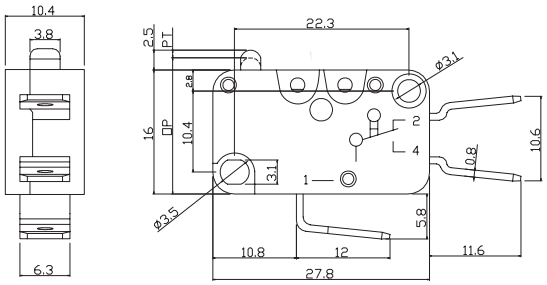

Model	KLS7-KW3-□Z-C113233L
□F (N)	0.3~4.5
MD Max(mm)	0.3
PT Max(mm)	2.0
□P Min(mm)	16.5



KLS7-KW3-□Z-C123233L2

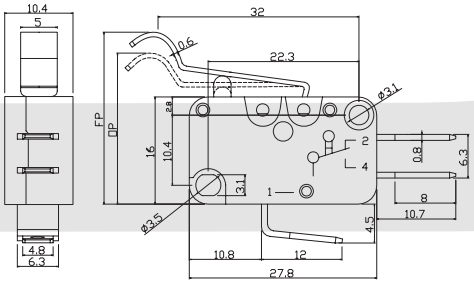

Model	KLS7-KW3-□Z-C123233L2
□F (N)	0.3~4.5
MD Max(mm)	0.8
PT Max(mm)	24.2
□P Min(mm)	20.0



KLS7-KW3-□Z-C123233L3

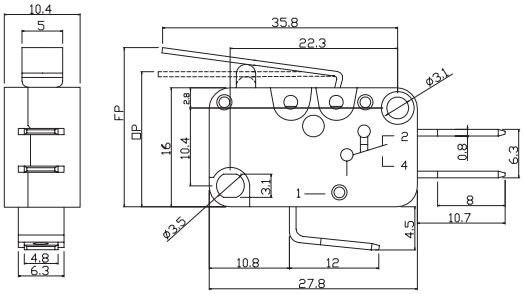

Model	KLS7-KW3-□Z-C123233L3
□F (N)	0.3~4.5
MD Max(mm)	0.5
PT Max(mm)	20.0
□P Min(mm)	16.0



KLS7-KW3-□Z-C113233L6

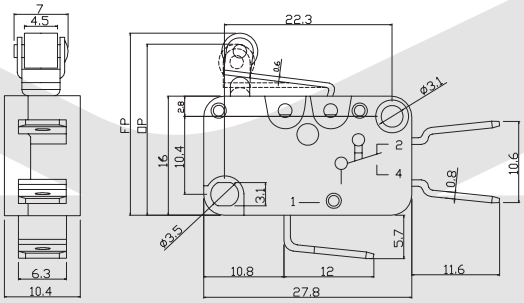

Model	KLS7-KW3-□Z-C113233L6
□F (N)	0.3~4.5
MD Max(mm)	0.4
PT Max(mm)	24.5
□P Min(mm)	22.5

Micro Switch Series

VII

KLS7-KW3-OZ Micro Switch Series

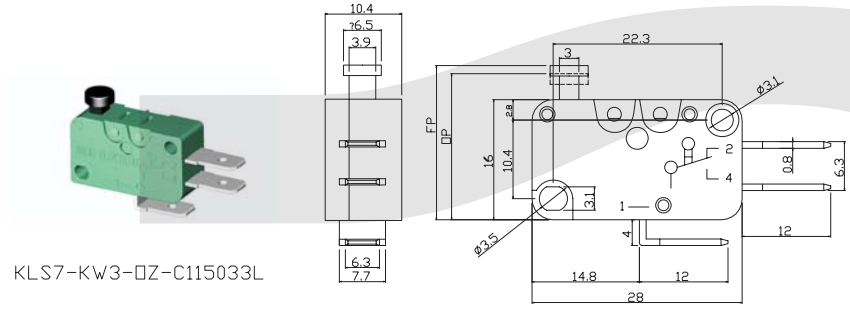

KLS7-KW3-□Z-C115033L

Model	KLS7-KW3-□Z-C115033L
□F (N)	0.3~4.5
MD Max(mm)	0.3
PT Max(mm)	20.2
□P Min(mm)	18.5

Micro Switch Series

KLS7-KW4-3Z Micro Switch Series

Features

Small contact clearance, high sensitivity
Snap action, high precision and high repeat accuracy
Flexible operating travel, wide range of operating force
Wide variety of terminal types
Wide variety of actuator forms
Adopt flame-retarded and fiber enhanced thermoplastics
Long life cycles, high reliability
Various approvals



Application

Widely applied in home appliances, medical devices, office facility, instrument and apparatus, electric motion tools, packing machinery, auto electronics etc.
Examples: vending machines, gaming machines, coffee machines, dishwashers, dryers, washing machines, microwave ovens, Central water heating, vacuum cleaners, water pump, projecting apparatus, industrial automations etc.

Specifications

Items		Value
Operating speed		0.1mm~1m/S
Operating Frequency		Mechanical 60cycles/min;
		Electrical 25cycles/min
Insulation resistance		≥100MΩ (DC500V)
Contact resistance		≤30mΩ (Initial value)
Test voltage	Between terminals of same polarity	AC1500V 50/60HZ
	Between current-carrying metal parts and ground (case)	AC3750V 50/60HZ
Vibration resistance		10～55 HZ 1.5mm Double amplitude
Shock resistance		Destruction: OF＞0.5N: 1000m/S2 (approx.100G) Max OF≤0.5N: 400m/S2 (approx.40G) Max
		Malfunction: OF＞0.5N: 200m/S2 (approx.20G) Max OF≤0.5N: 100m/S2 (approx.10G) Max
Life expectancy		Mechanical≥2000000cycles
		Electrical≥50000cycles
Degree of protection against electric		Class Ⅰ/Class Ⅱ
PTI		175
Approvals		UL CUL VDE TUV CE DEMKO CQC

Micro Switch Series

KLS7-KW4-3Z Micro Switch Series

ORDER INFORMATION

KLS7-KW4-3Z- X X X X X X X - X

Part Number

Micro Switch Type

Outline characteristic
A: Hook up Style
B: Basic Style

Circuit
1:SPDT SP
2:SPDT-NO
3:SPDT-NC

Termination
1: Quick connect x0.5mm
2: Solder Terminal
3: PCB terminal
4: Right side PCB terminal
5: Left side PCB terminal
0: Non-standard terminal

Plunger catagory
1:1.3 mm
2:1.4 mm
3:1.5 mm
4:2.0 mm

Actuator forms (Levers)
Refer to lever list
L1
L2
L3
... ...

Degree of temperature
-55°C~+120°C

Electrical ratings
1:5 A 125/250VAC
2:5 (2) A 250VAC
3:5 A 250VAC

Base colour
0: Green
1: Black

Outline Characteristic

Hook up Style	Basic Style
A 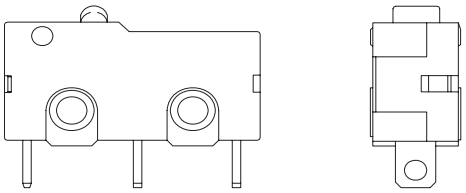	B 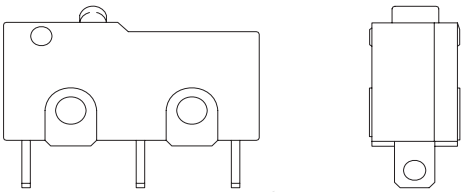

Circuit Illustration

SPDT 1	SPST-NO 2	SPST-NC 3
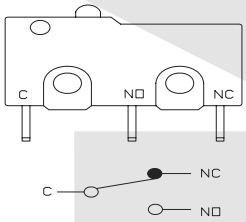	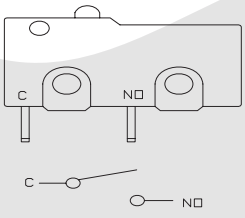	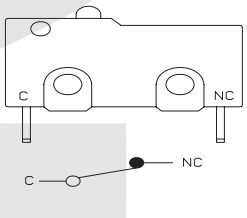

Micro Switch Series

KLS7-KW4-3Z Micro Switch Series

Mounting Hole Dimensions

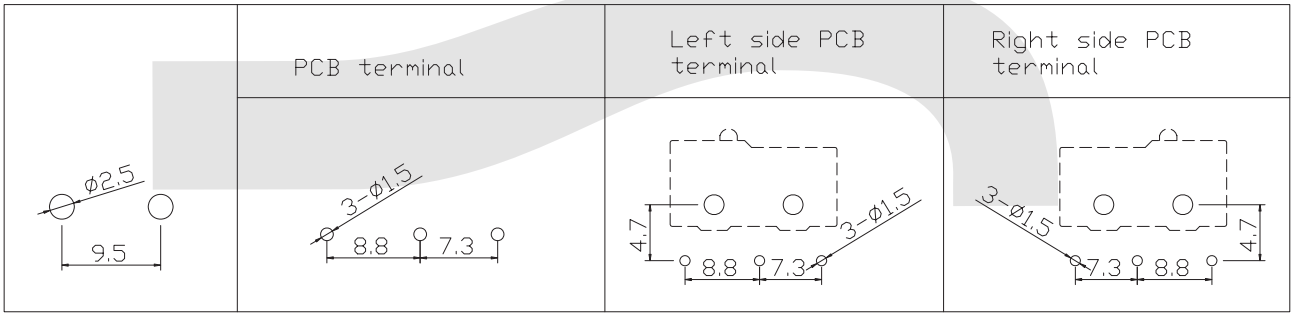

Terminal dimensions

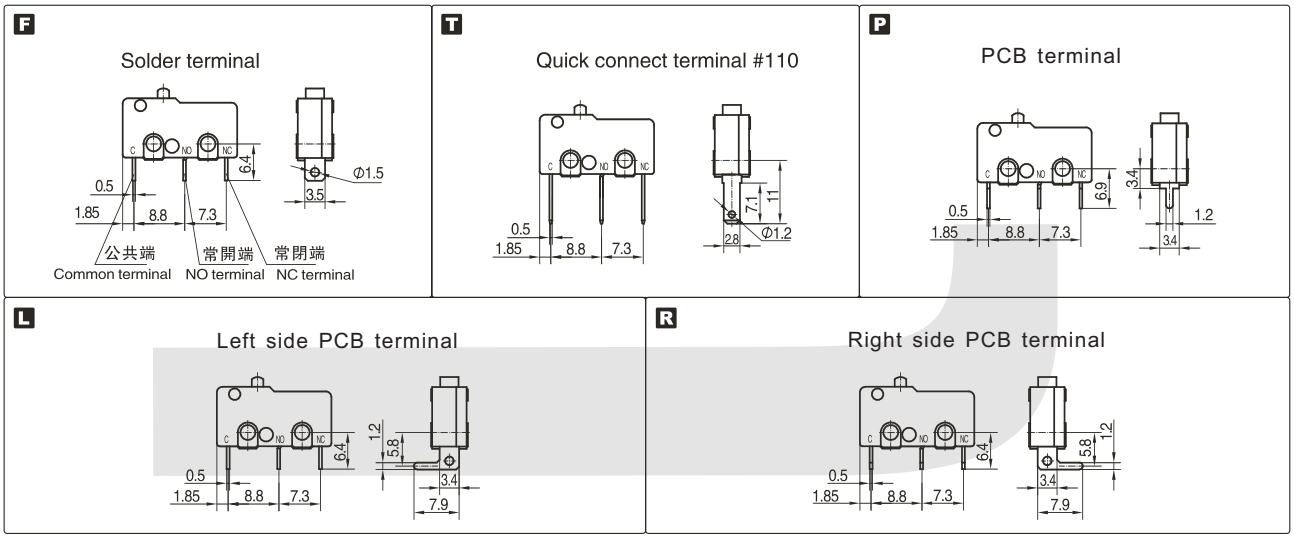

Internal configuration drawing

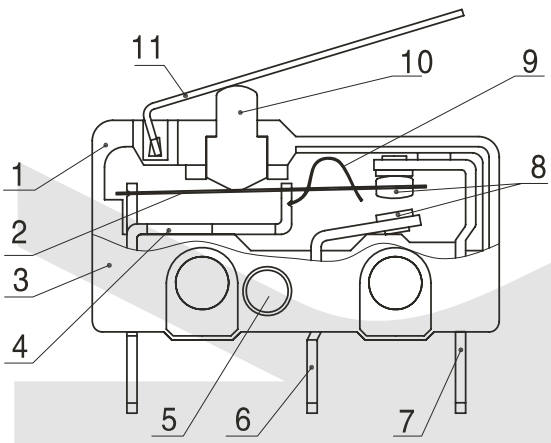

1	Case
2	Moving piece
3	Cover
4	Support
5	Rivet
6	NO terminal
7	NC terminal
8	Contact
9	Spring
10	Plunger
11	Moving arm(Lever)

Micro Switch Series

KLS7-KW4-3Z Micro Switch Series



KLS7-KW4-3Z-A122013L

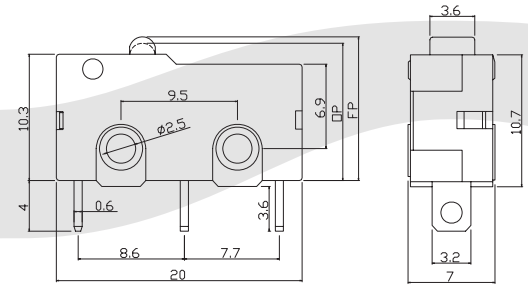

Model	KLS7-KW4-3Z-A122013L
OF (N)	0.2~3.0
MD Max(mm)	0.2
PT Max(mm)	12.2
OP Min(mm)	11.0



KLS7-KW4-3Z-B122013L

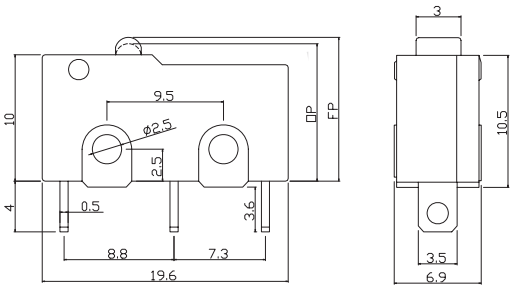

Model	KLS7-KW4-3Z-B122013L
OF (N)	0.2~3.0
MD Max(mm)	0.2
PT Max(mm)	12.2
OP Min(mm)	11.0



KLS7-KW4-3Z-B222013L

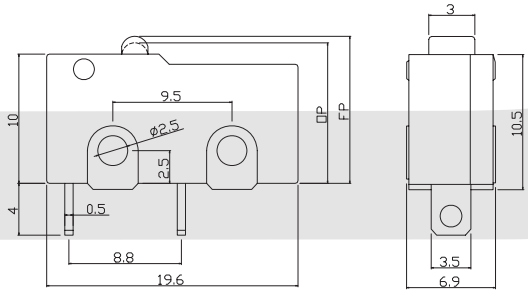

Model	KLS7-KW4-3Z-B222013L
OF (N)	0.2~3.0
MD Max(mm)	0.2
PT Max(mm)	12.2
OP Min(mm)	11.0



KLS7-KW4-3Z-B122013L1

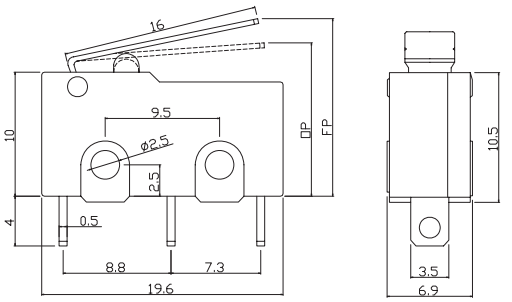

Model	KLS7-KW4-3Z-B122013L1
OF (N)	0.2~3.0
MD Max(mm)	1.2
PT Max(mm)	14.5
OP Min(mm)	10.5



KLS7-KW4-3Z-B222013L1

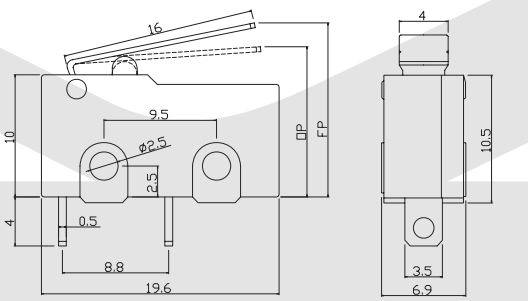

Model	KLS7-KW4-3Z-B222013L1
OF (N)	0.2~3.0
MD Max(mm)	1.2
PT Max(mm)	14.5
OP Min(mm)	10.5

Micro Switch Series

KLS7-KW4-3Z Micro Switch Series



KLS7-KW4-3Z-B122013L2

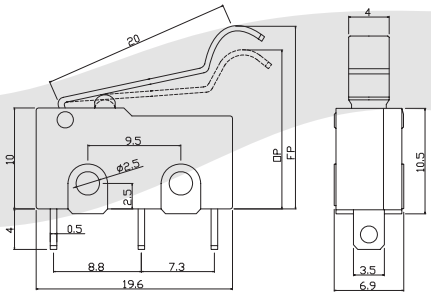

Model	KLS7-KW4-3Z-B122013L2
OF (N)	0.2~3.0
MD Max(mm)	1.2
PT Max(mm)	17.0
OP Min(mm)	13.0



KLS7-KW4-3Z-B222013L2

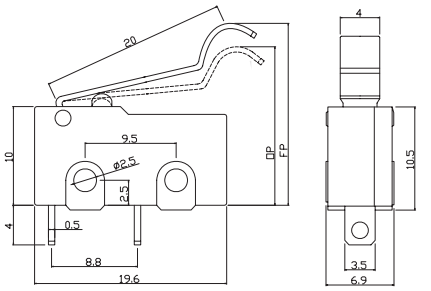

Model	KLS7-KW4-3Z-B222013L2
OF (N)	0.2~3.0
MD Max(mm)	1.2
PT Max(mm)	17.0
OP Min(mm)	13.0



KLS7-KW4-3Z-B132013L

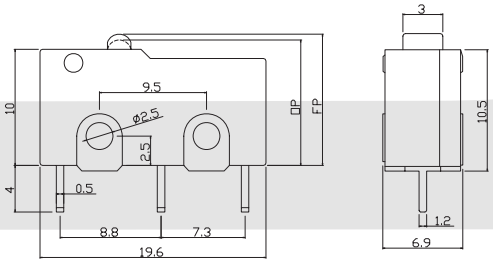

Model	KLS7-KW4-3Z-B132013L
OF (N)	0.2~3.0
MD Max(mm)	0.2
PT Max(mm)	12.0
OP Min(mm)	11.0



KLS7-KW4-3Z-B232013L

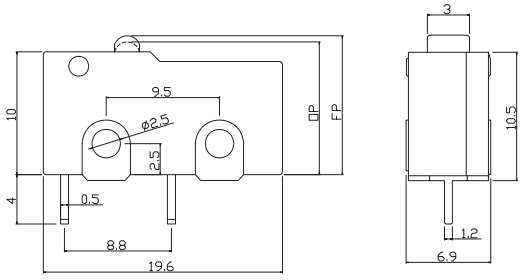

Model	KLS7-KW4-3Z-B232013L
OF (N)	0.2~3.0
MD Max(mm)	0.2
PT Max(mm)	12.0
OP Min(mm)	11.0



KLS7-KW4-3Z-B122013L3

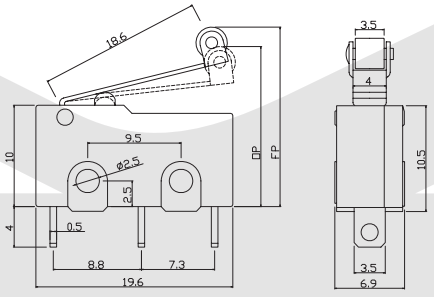

Model	KLS7-KW4-3Z-B122013L3
OF (N)	0.2~3.0
MD Max(mm)	1.2
PT Max(mm)	19.5
OP Min(mm)	16.0

Micro Switch Series

KLS7-KW4-3Z Micro Switch Series



KLS7-KW4-3Z-B322013L3

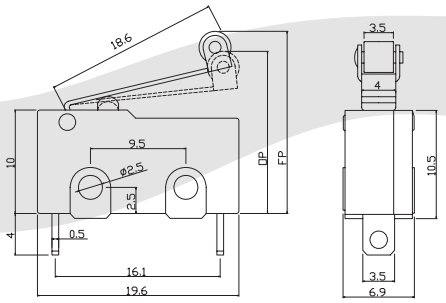

Model	KLS7-KW4-3Z-B322013L3
OF (N)	0.2~3.0
MD Max(mm)	1.2
PT Max(mm)	19.5
OP Min(mm)	16.0



KLS7-KW4-3Z-B122013L4

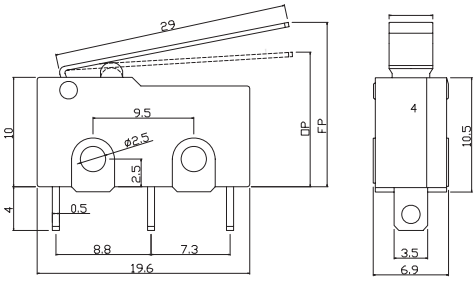

Model	KLS7-KW4-3Z-B122013L4
OF (N)	0.2~3.0
MD Max(mm)	1.5
PT Max(mm)	18.0
OP Min(mm)	14.5



KLS7-KW4-3Z-B322013L4

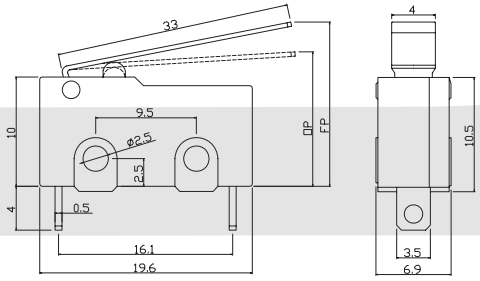

Model	KLS7-KW4-3Z-B322013L4
OF (N)	0.2~3.0
MD Max(mm)	1.5
PT Max(mm)	18.0
OP Min(mm)	14.5



KLS7-KW4-3Z-B152013L4

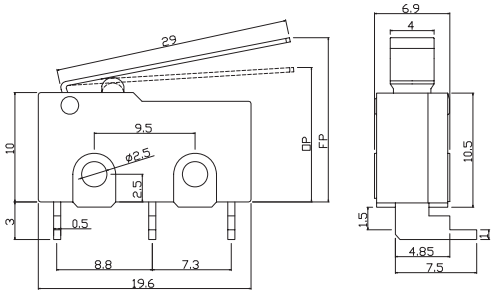

Model	KLS7-KW4-3Z-B152013L4
OF (N)	0.2~3.0
MD Max(mm)	1.5
PT Max(mm)	18.0
OP Min(mm)	14.5



KLS7-KW4-3Z-B142013L5

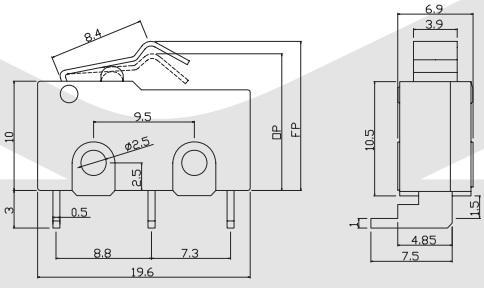

Model	KLS7-KW4-3Z-B142013L5
OF (N)	0.2~3.0
MD Max(mm)	0.5
PT Max(mm)	15.5
OP Min(mm)	14.1

Micro Switch Series

KLS7-KW4-3Z Micro Switch Series



KLS7-KW4-3Z-B122013L8

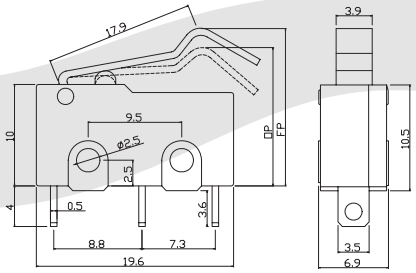

Model	KLS7-KW4-3Z-B122013L8
□F (N)	0.2~3.0
MD Max(mm)	1.0
PT Max(mm)	18.0
□P Min(mm)	13.5



KLS7-KW4-3Z-B112013L17

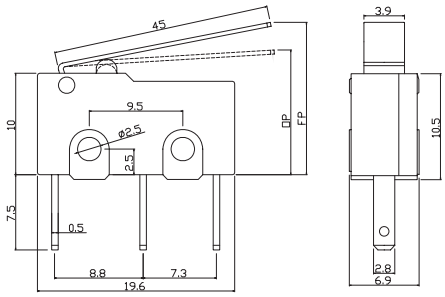

Model	KLS7-KW4-3Z-B112013L17
□F (N)	0.2~3.0
MD Max(mm)	2.0
PT Max(mm)	20.0
□P Min(mm)	14.0

DIP Switch Series

KLS7-DS030



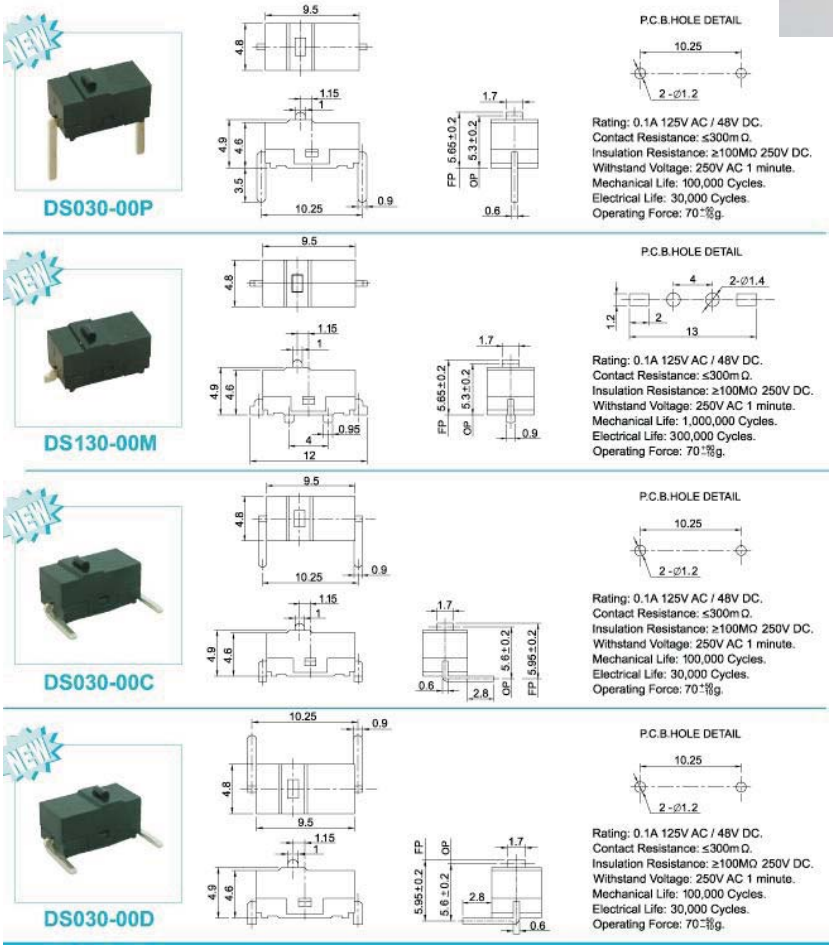

ORDER INFORMATION

DIP Switch Series

KLS7-DS030-00A

SPECIFICATIONS

Rating: 0.1A 125V AC / 0.1A 48V DC
SIZE: 10.3 x 5.2 x 4.9 mm
Pitch: 10.25 mm
Lever: 13.6 mm
Operating Force: 30g
Withatand Voltage: AC 250 V 1 Minute
Insulation resistance: 100 MΩ 250 V DC
Contact resistance: 300 MΩ Min.
Operating temperature: -10oC ~ +60oC
Mechanical Life: 1,00,000 Cycles
Electrical Life: 30,000 Cycles



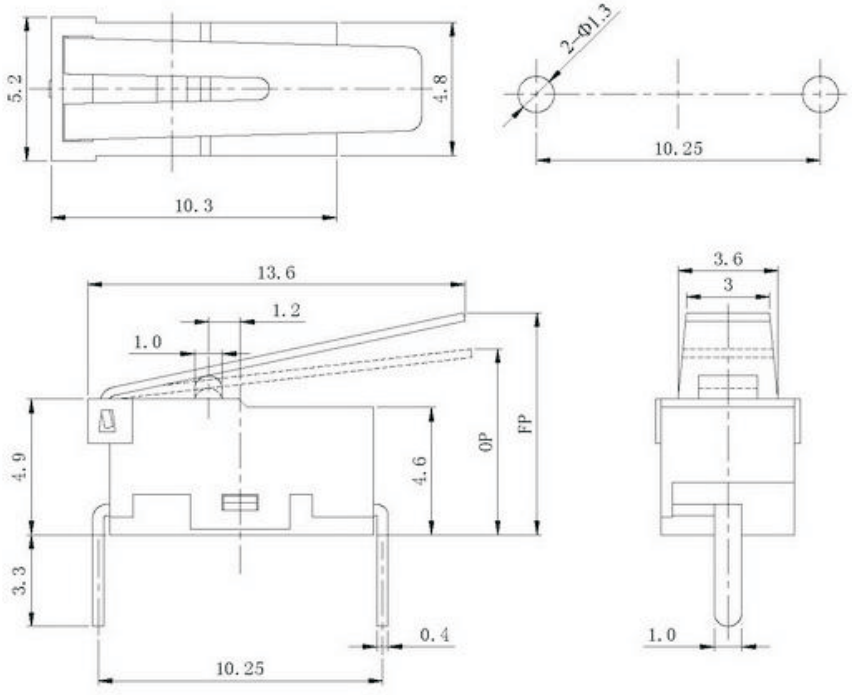

ORDER INFORMATION

DIP Switch Series

KLS7-DS031

SPECIFICATIONS

Rating: 0.1A 125V AC / 0.1A 48V DC
SIZE: 8.6 x 4.8 x 3.5 mm
Pitch: 5.0 mm
Operating Force: 70g
Withatand Voltage: AC 250 V 1 Minute
Insulation resistance: 100 MΩ 250 V DC
Contact resistance: 300 MΩ
Operating temperature:-25oC ~ +80oC
Mechanical Life: 100,000 Cycles
Electrical Life: 100,000 Cycles

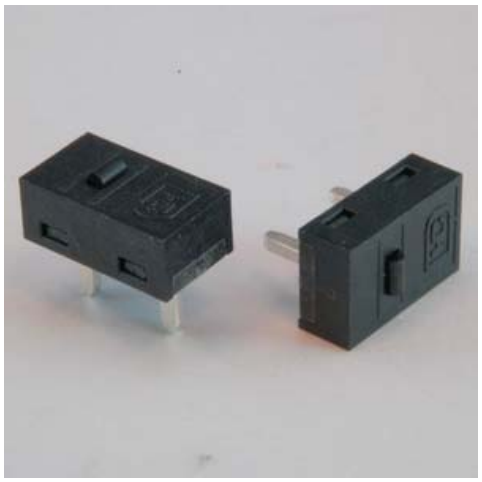

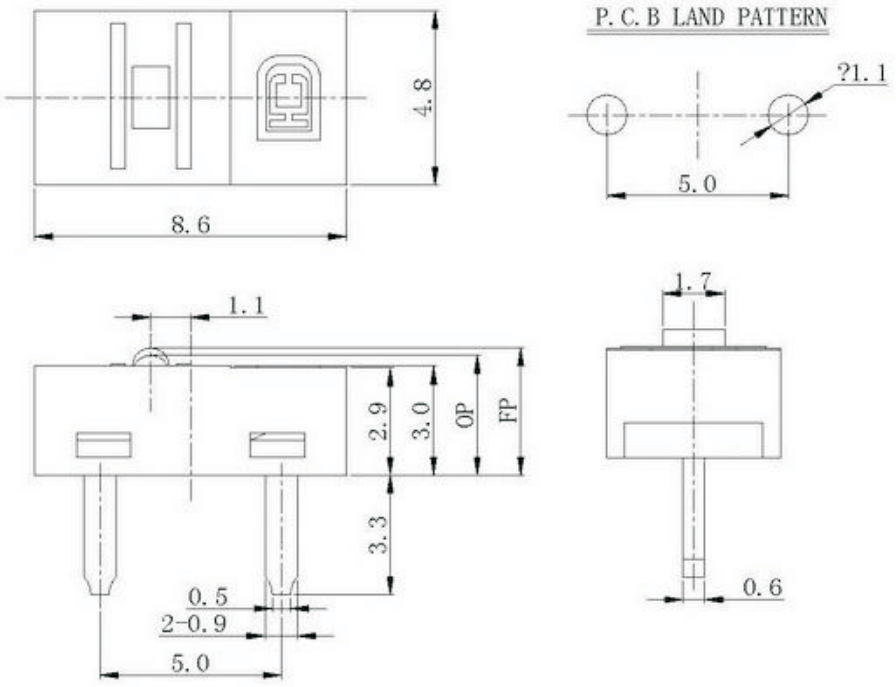

ORDER INFORMATION

DIP Switch Series

KLS7-DS031

SPECIFICATIONS

Rating: 0.1A 125V AC / 0.1A 48V DC
SIZE: 8.6 x 4.8 x 3.5 mm
Operating Force: 70g
Withatand Voltage: AC 250 V 1 Minute
Insulation resistance: 100 MΩ 250 V DC
Contact resistance: 300 MΩ
Operating temperature:-25oC ~ +80oC
Mechanical Life: 1000,000 Cycles
Electrical Life: 1000,000 Cycles



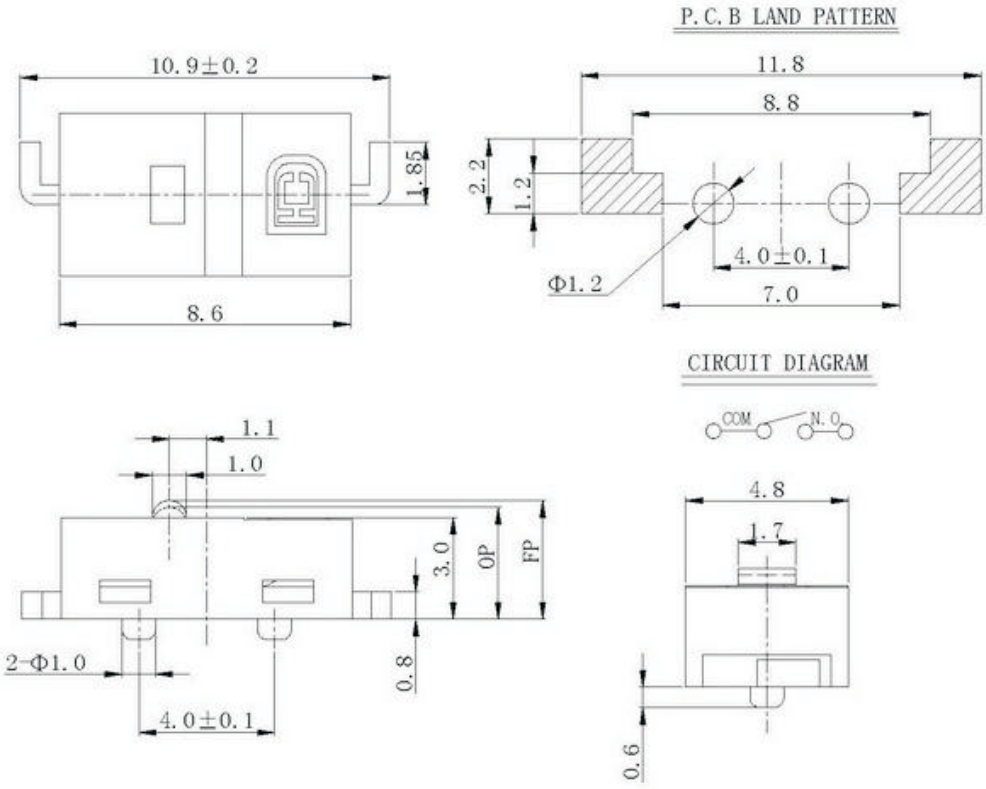

ORDER INFORMATION

DIP Switch Series

KLS7-DS033

SPECIFICATIONS

Rating: 0.3A 6V DC
SIZE: 8.2 x 2.7 x 3.65 mm
Pitch: 2.5 mm
Operating Force: 40g
Withatand Voltage: AC 250 V 1 Minute
Insulation resistance: 100 MΩ Mim. 250V DC
Contact resistance: 300 MΩ
Operating temperature: -25oC ~ +80oC
Mechanical Life: 1000,000 Cycles
Electrical Life: 1000,000 Cycles

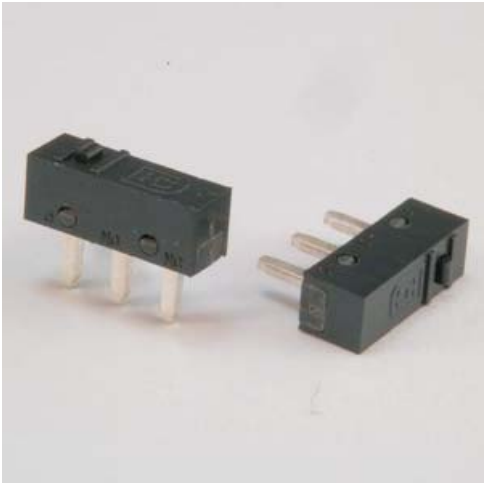

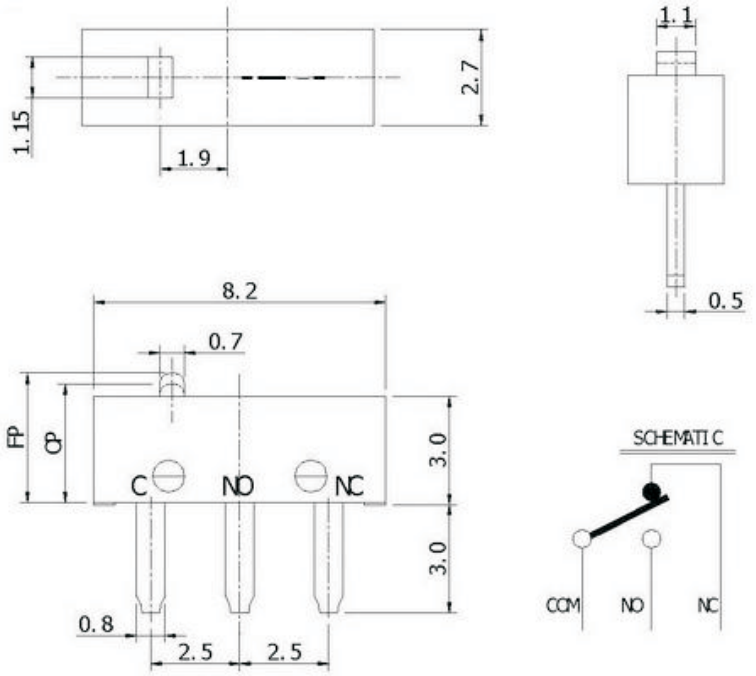

ORDER INFORMATION

DIP Switch Series

KLS7-SSM-001



Rating	:500mA 30V DC.	Contact Resistance	:100mΩ Max. (initial)
Operating Position	001 Series : 6.7mm±0.5mm. 002 Series : 5.5mm±0.1mm. 003 Series : 6mm±0.5mm. 004 Series : 5.7mm±0.4mm.	Operating Force	:50g Max.
Life	:300,000 Cycles Min.	Operating Temperature	:-25C ~ +70C.
Insulation Resistance	:100MΩ Min. (at 500V DC)	Ambient Humidity	:35% ~ 85%RH.
Dielectric Withstanding Voltage	:250V AC 1 minute.	Maifunction Durability	:10 ~ 55Hz 1.5mm. double amplitude during 2 hours.



SSM-001

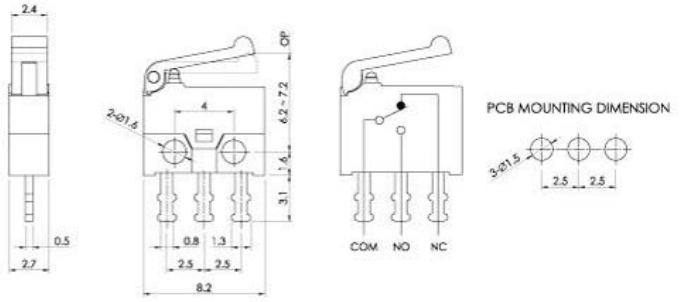



SSM-001L

L1 = 1.5
L2 = 3.1

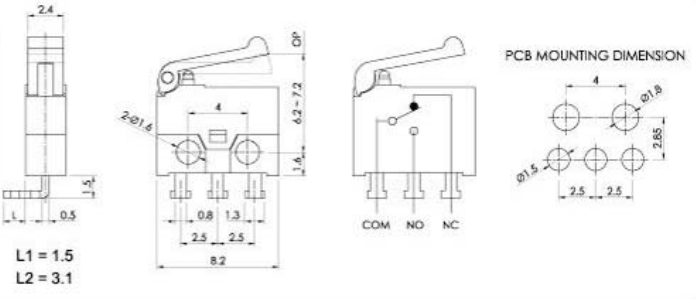



SSM-001R

L1 = 1.5

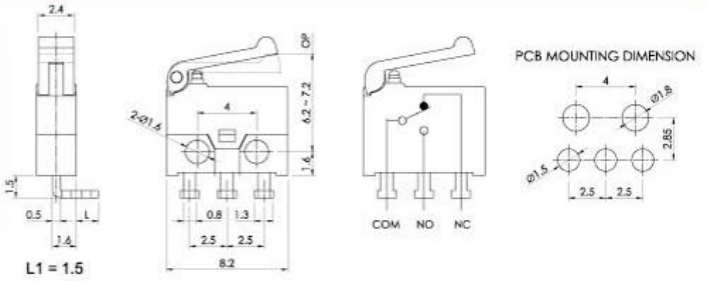

Switch

KLS electronic
www.cnkls.com

DIP Switch Series

KLS7-SSM-001



SSM-003

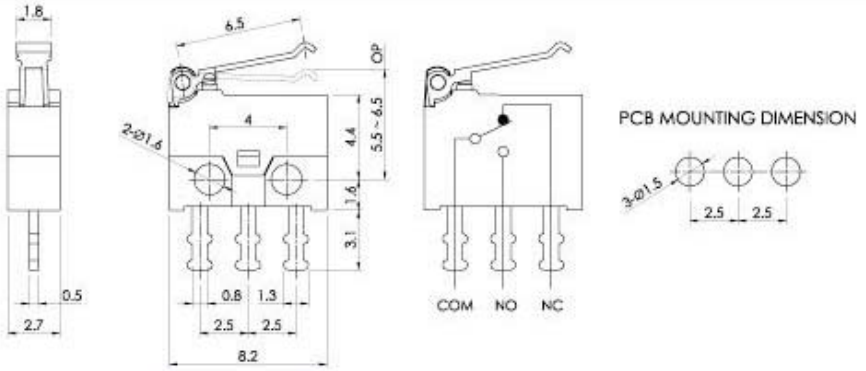



SSM-004

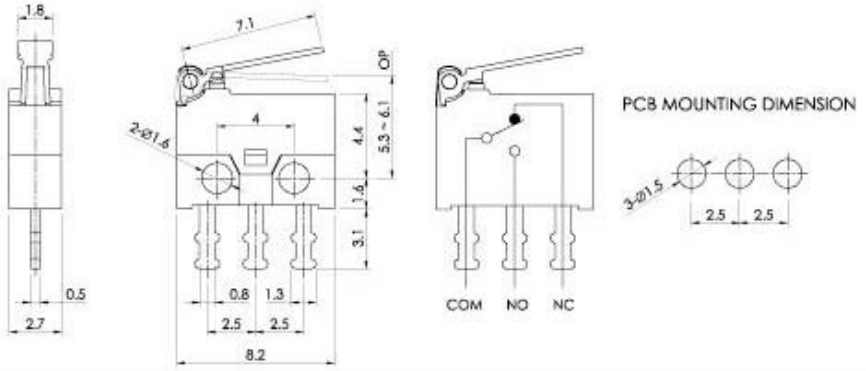



SSM-003L

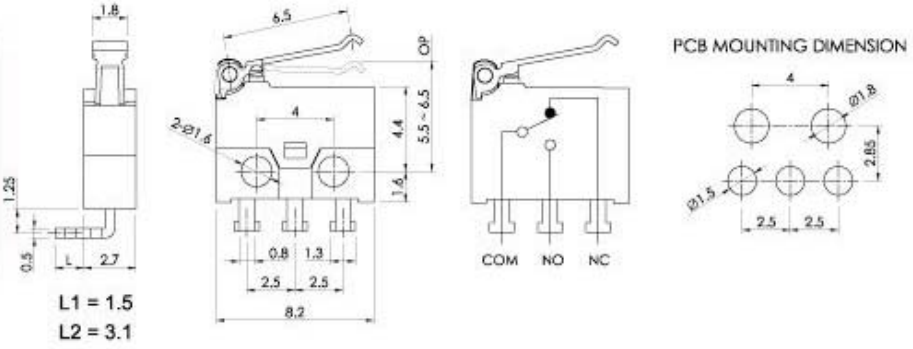

ORDER INFORMATION

DIP Switch Series

KLS7-MT-01/7.0MM SMD

SPECIFICATIONS

Rating: 100mA / 12V DC
Size 7.0MM SMD / 4 directions + center push
Insulation resistance: 100MΩ min. 100V DC
Contact resistance: 500MΩ max.
Withatand Voltage: AC 250V (50Hz) / Min
Ambient Temper.Used : -10°C to +60°C
Mechanical Life: 100,000 Cycles
Operating force:4 direction 160±50 gf / center push 280±100 gf
Travel: 4 direction 0.20±0.1mm / center push 0.15±0.1 gf

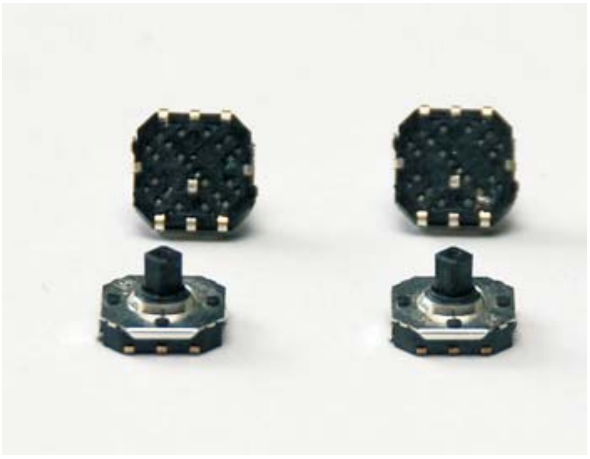

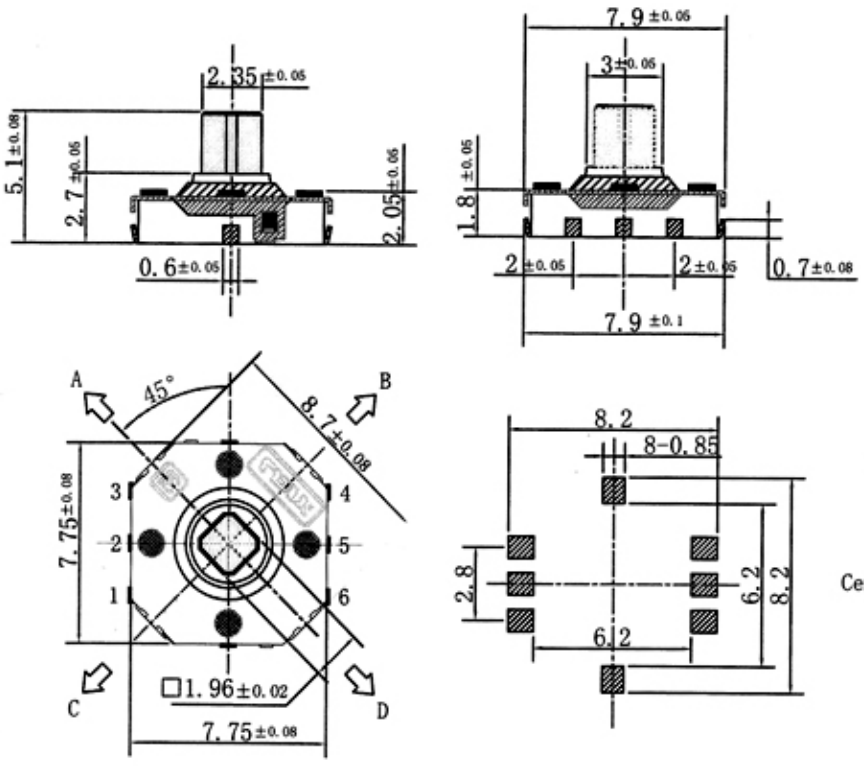

ORDER INFORMATION

DIP Switch Series

KLS7-MT-03/10MM DIP

SPECIFICATIONS

Rating: 50mA / 12V DC
Size 10MM DIP / 4 directions + center push/ Height 10.0mm
Insulation resistance: 500MΩ min. 100V DC
Contact resistance: 500MΩ max.
Withatand Voltage: AC 250V (50Hz) / Min
Ambient Temper.Used : -10°C to +60°C
Mechanical Life: 100,000 times
Operating force:4 direction 160±50 gf / center push320±100 gf
Travel: 4 direction 0.25±0.1mm / center push 0.15±0.1 gf

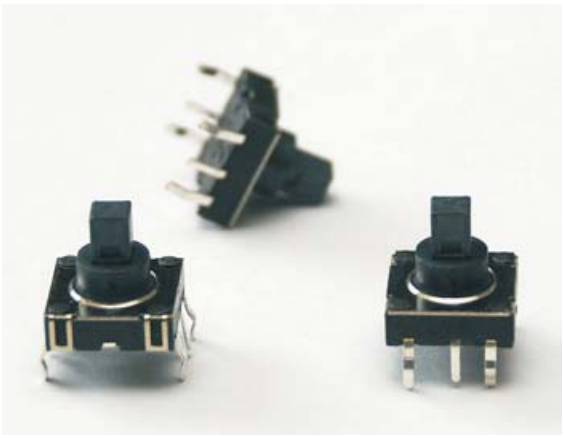

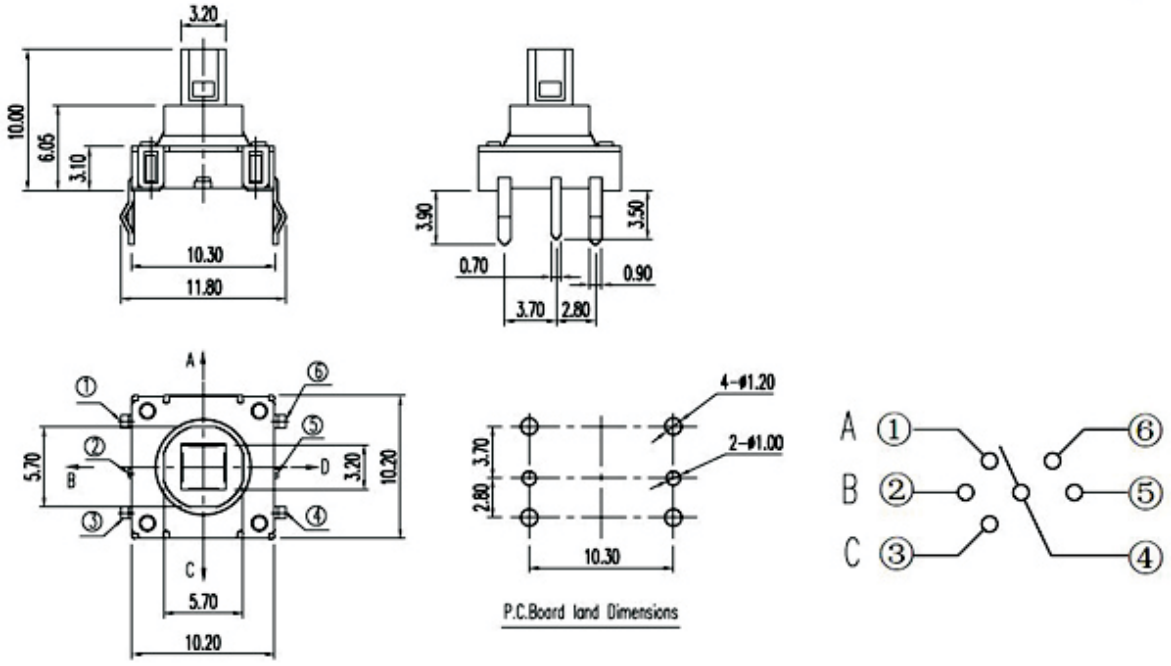

ORDER INFORMATION

DIP Switch Series

KLS7-MT-06/10MM SMD

SPECIFICATIONS

KLS7-MT-06-10.0:Size 10mm SMD / 4 directions + center push / Height 10.0mm

Rating:50mA / 12V DC
Insulation resistance: 500MΩ min. 100V DC
Contact resistance: 500MΩ max.
Withatand Voltage: AC 250V (50Hz) / Min
Ambient Temper.Used : -10°C to +60°C
Mechanical Life: 100,000 times
Operating force:4 direction 160 50 gf / center push 350 100 gf
Travel :4 direction 0.25±0.1mm / center push 0.15±0.1 gf

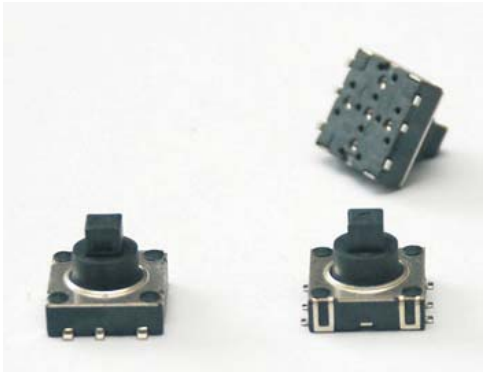

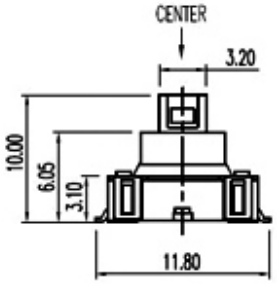

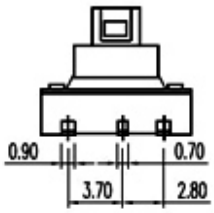

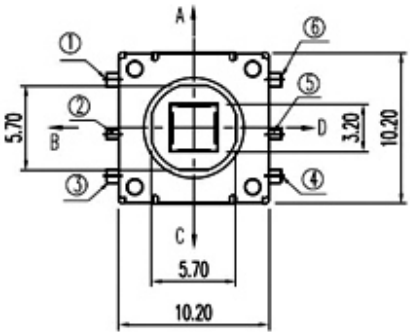

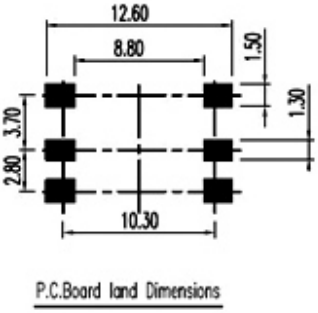

P.C.Board land Dimensions

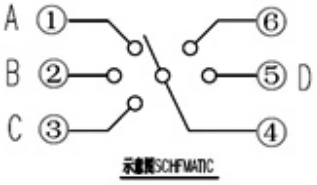

SCHEMATIC

ORDER INFORMATION

DIP Switch Series

KLS7-MT-05/10MM SMD

SPECIFICATIONS

KLS7-MT-05-5.0: Size 10mm SMD / 4 directions + center push / Height 5.0mm
KLS7-MT-05-9.0:Size 10mm SMD / 4 directions + center push / Height 9.0mm

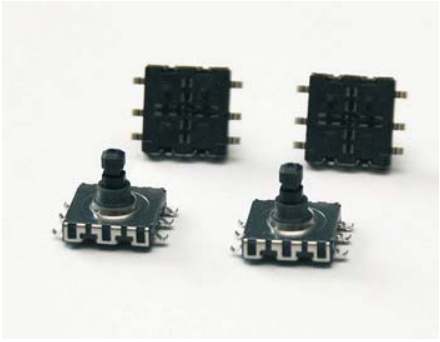

Rating: 100mA / 12V DC
Insulation resistance: 500MΩ min. 100V DC
Contact resistance: 500MΩ max.
Withatand Voltage: AC 250V (50Hz) / Min
Ambient Temper.Used : -10°C to +60°C
Mechanical Life: 100,000 times
Operating force:4 direction 160 50 gf / center push 250 100 gf
Travel :4 direction 0.25±0.1mm / center push 0.15±0.1 gf

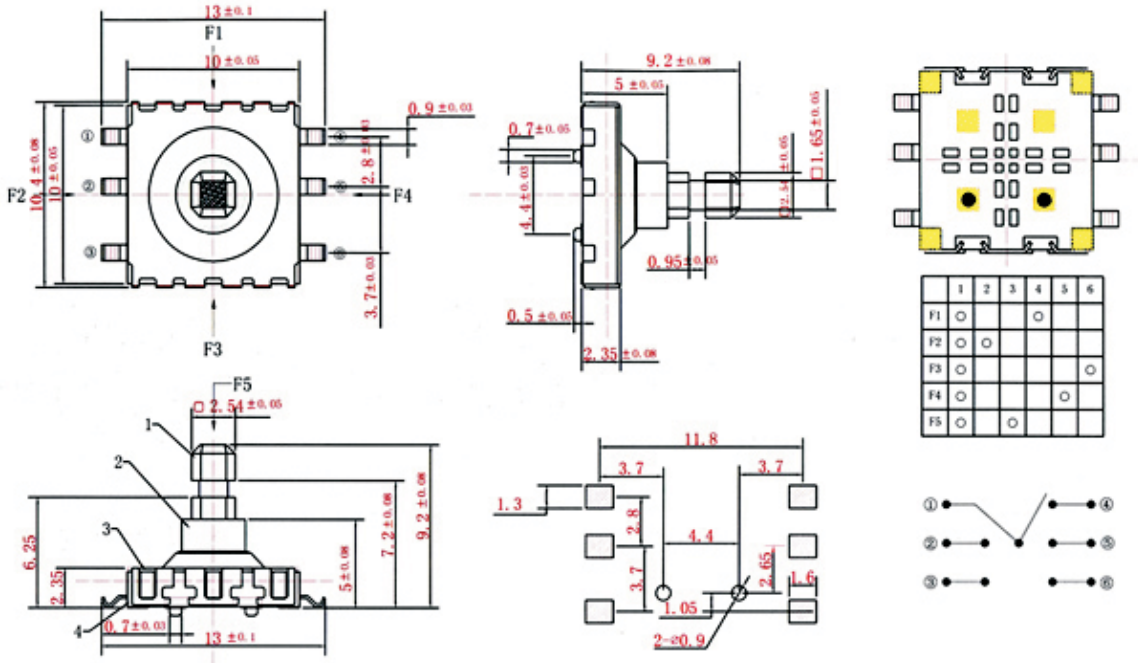

ORDER INFORMATION

DIP Switch Series

KLS7-MT-07/10MM SMD 10 contacts

SPECIFICATIONS

KLS7-MT-07-5.0: Size 10mm SMD / 4 directions + center push / Height 5.0mm
KLS7-MT-07-9.0:Size 10mm SMD / 4 directions + center push / Height 9.0mm
Rating:100mA / 12V DC
Insulation resistance: 500MΩ min. 100V DC
Contact resistance: 500MΩ max.
Withatand Voltage: AC 250V (50Hz) / Min
Ambient Temper.Used : -10°C to +60°C
Mechanical Life: 100,000 times
Operating force:4 direction 160 50 gf / center push250 100 gf
Travel :4 direction 0.25±0.1mm / center push 0.15±0.1 gf

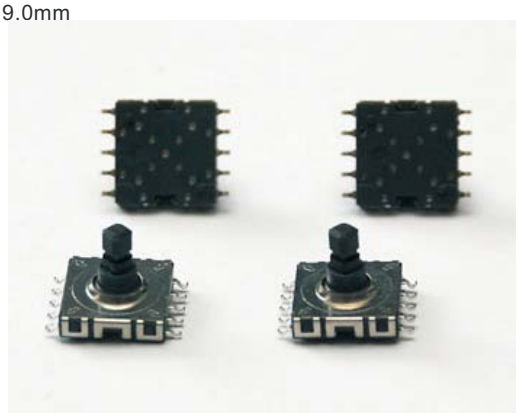

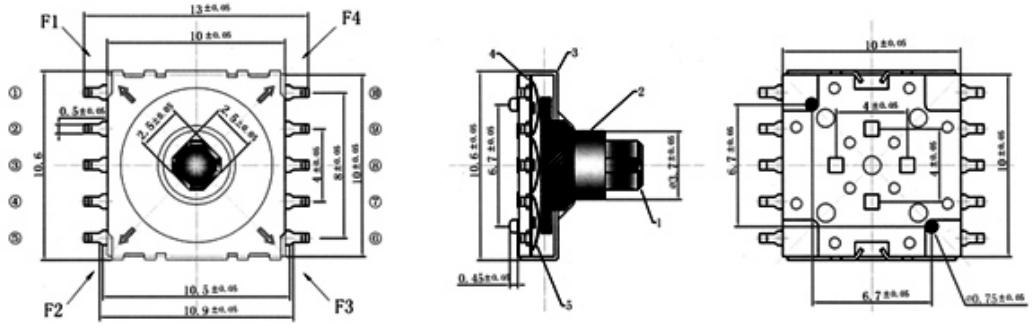

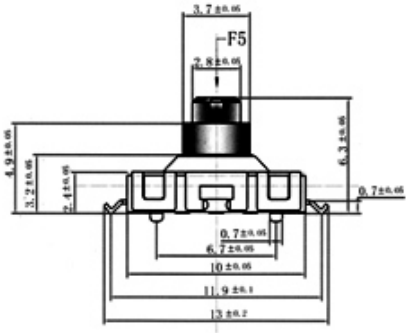

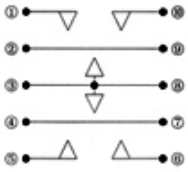

	1	2	3	4	5	6	7	8	9	10
F1	○	○							○	
F2				○	○		○			
F3				○		○	○			
F4		○							○	○
F5		○	○	○		○	○	○		

ORDER INFORMATION

DIP Switch Series

KLS7-MT-08/10MM SMD Flat knob

SPECIFICATIONS

KLS7-MT-08: Size 10mm SMD Flat knob / 4 directions + center push
Rating:100mA / 12V DC
Insulation resistance: 500MΩ min. 100V DC
Contact resistance: 500MΩ max.
Withatand Voltage: AC 250V (50Hz) / Min
Ambient Temper.Used : -10°C to +60°C
Mechanical Life: 100,000 times
Operating force:4 direction 160 50 gf / center push250 100 gf
Travel :4 direction 0.25±0.1mm / center push 0.15±0.1 gf

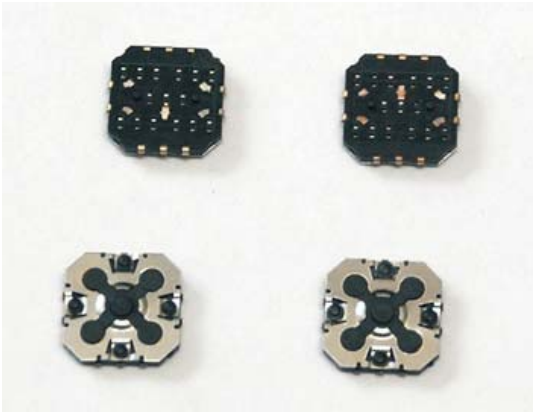

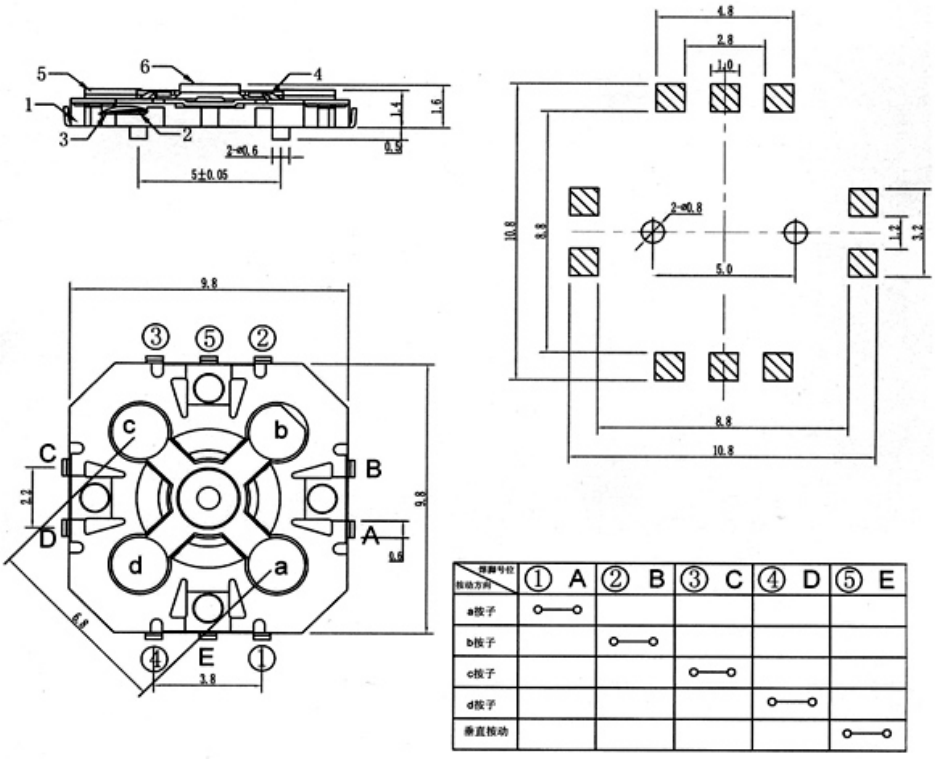

按动方向 \ 焊脚号位	① A	② B	③ C	④ D	⑤ E
a按子	○—○				
b按子		○—○			
c按子			○—○		
d按子				○—○	
垂直按动					○—○

ORDER INFORMATION

Push Button Switch Series

KLS7-PBS-001 Push Button Switch Series

ELECTRICAL
Rating: 4A 125V AC ,2A 250V AC
Contact resistance: 20mΩ Max
Insulation resistance: 100MΩ/500VDC Min
Withstanding Voltage: AC1000V/1Min
Operating Temperature: -25°C~+85°C
Electrical life: 50000 Cycles



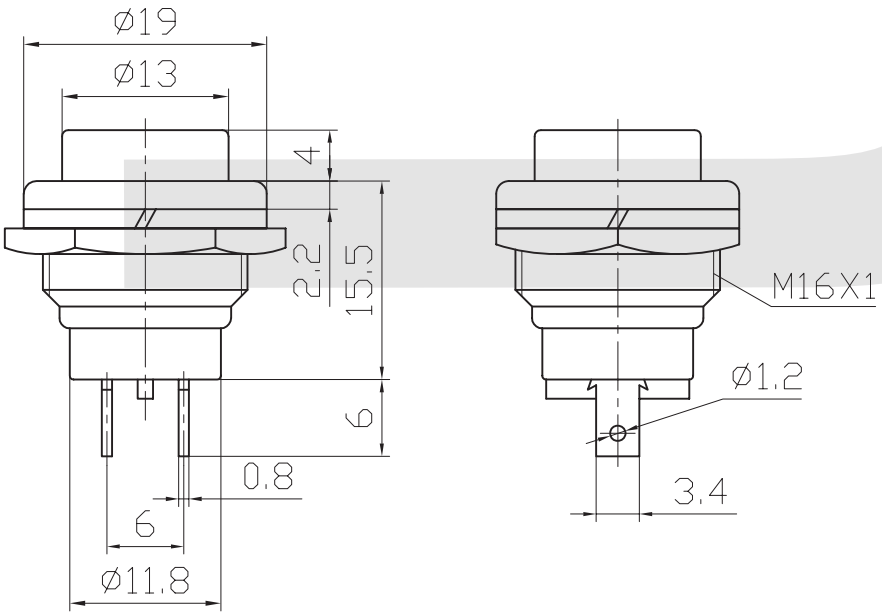

Circuitry

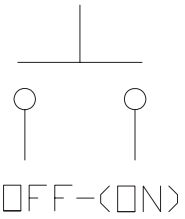

Mounting

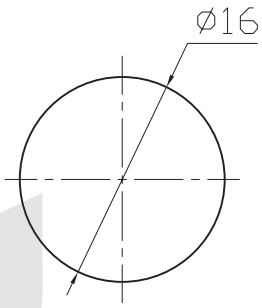

ORDER INFORMATION

KLS7-PBS-001 X

Part Number

PBS-001: Push Button Switch Series

Function: C=ON-(OFF)
D=OFF-(ON)

Push Button Switch Series

KLS7-PBS-002 Push Button Switch Series

ELECTRICAL
Rating: 3A 125V AC ,1A 250V AC
Contact resistance: 20mΩ Max
Insulation resistance: 100MΩ/500VDC Min
Withstanding Voltage: AC1000V/1Min
Operating Temperature: -25°C~+85°C
Electrical life: 50000 Cycles



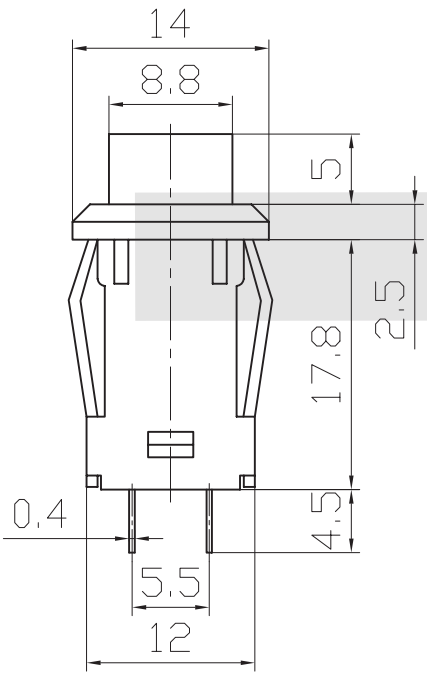

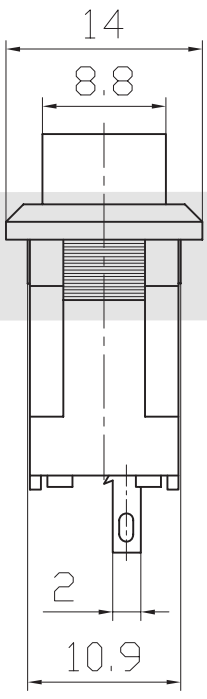

Circuitry

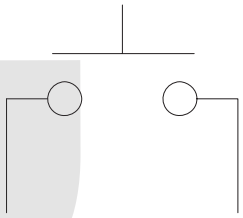

ON-OFF

Mounting

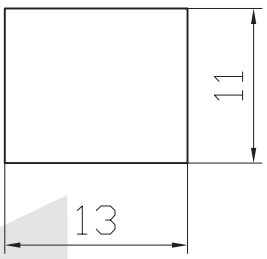

ORDER INFORMATION

KLS7-PBS-002 X X

Part Number — PBS-002: Push Button Switch Series

Function: B=ON-OFF

Button color: R=Red G=Green B=Black

Push Button Switch Series

KLS7-PBS-003 Push Button Switch Series

ELECTRICAL
Rating: 3A 125V AC ,1A 250V AC
Contact resistance: 20mΩ Max
Insulation resistance: 100MΩ/500VDC Min
Withstanding Voltage: AC1000V/1Min
Operating Temperature: -25°C~+85°C
Electrical life: 50000 Cycles

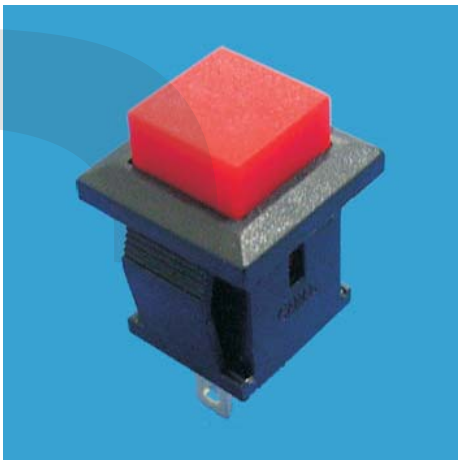

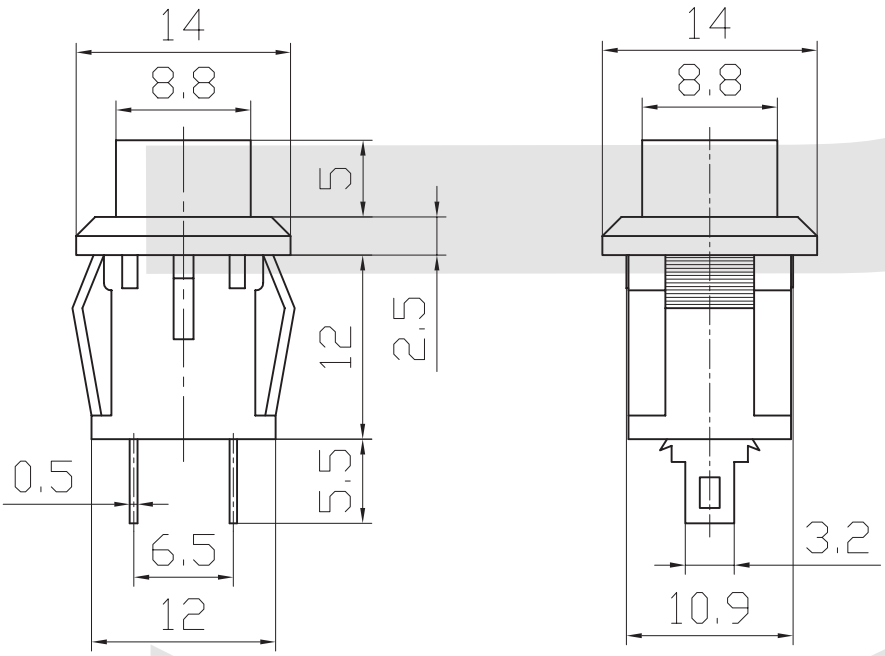

Circuitry

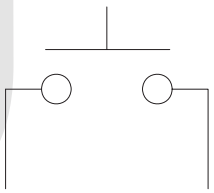

Mounting

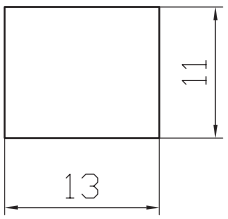

ORDER INFORMATION

KLS7-PBS-003 X X

Part Number — PBS-003: Push Button Switch Series

Function: C=ON-(OFF) D=OFF-(ON)

Button color: R=Red G=Green B=Black

Push Button Switch Series

KLS7-PBS-004 Push Button Switch Series

ELECTRICAL
Rating: 3A 125V AC ,1A 250V AC
Contact resistance: 20mΩ Max
Insulation resistance: 100MΩ/500VDC Min
Withstanding Voltage: AC1000V/1Min
Operating Temperature: -25°C~+85°C
Electrical life: 50000 Cycles



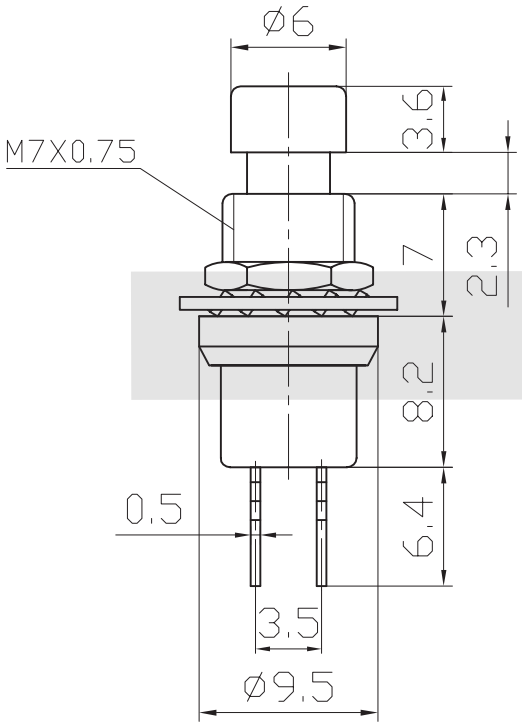

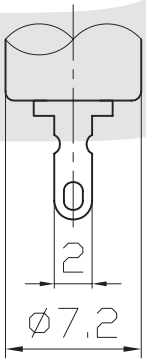

Circuitry

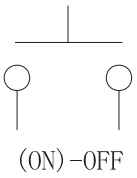

Mounting

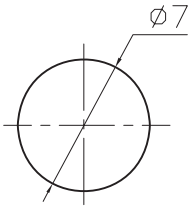

ORDER INFORMATION

KLS7-PBS-004 X X

- Part Number
- PBS-004: Push Button Switch Series
- Function: C=ON-(OFF) D=OFF-(ON)
- Button color: R=Red G=Green B=Black

Push Button Switch Series

KLS7-PBS-005 Push Button Switch Series

ELECTRICAL

Rating: 3A 125V AC ,1A 250V AC
Contact resistance: 20mΩ Max
Insulation resistance: 100MΩ/500VDC Min
Withstanding Voltage: AC1000V/1Min
Operating Temperature: -25°C~+85°C
Electrical life: 50000 Cycles



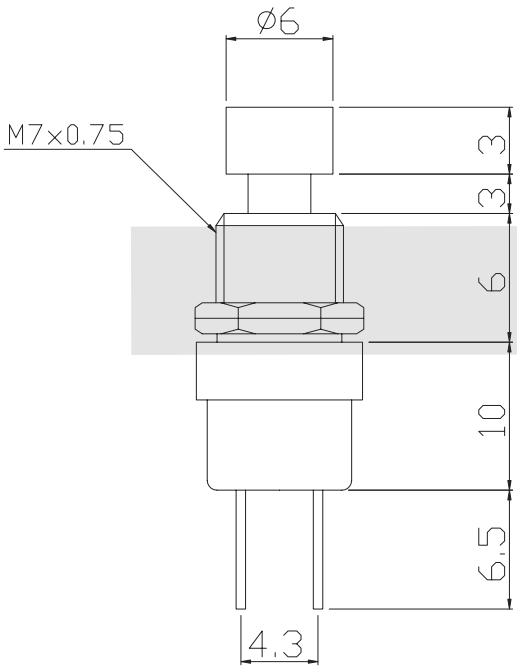

Circuitry

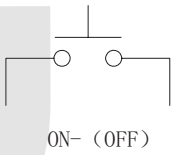

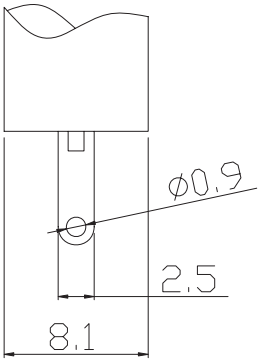

Mounting

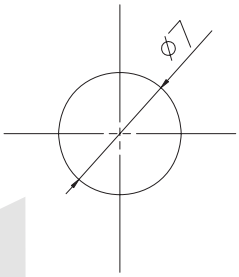

ORDER INFORMATION

KLS7-PBS-005 X X

- Part Number
- PBS-005: Push Button Switch Series
- Function: C=ON-(OFF) D=OFF-(ON)
- Button color: R=Red G=Green B=Black

Push Button Switch Series

KLS7-PBS-006 Push Button Switch Series

ELECTRICAL
Rating: 3A 125V AC ,1A 250V AC
Contact resistance: 20mΩ Max
Insulation resistance: 100MΩ/500VDC Min
Withstanding Voltage: AC1000V/1Min
Operating Temperature: -25°C~+85°C
Electrical life: 50000 Cycles



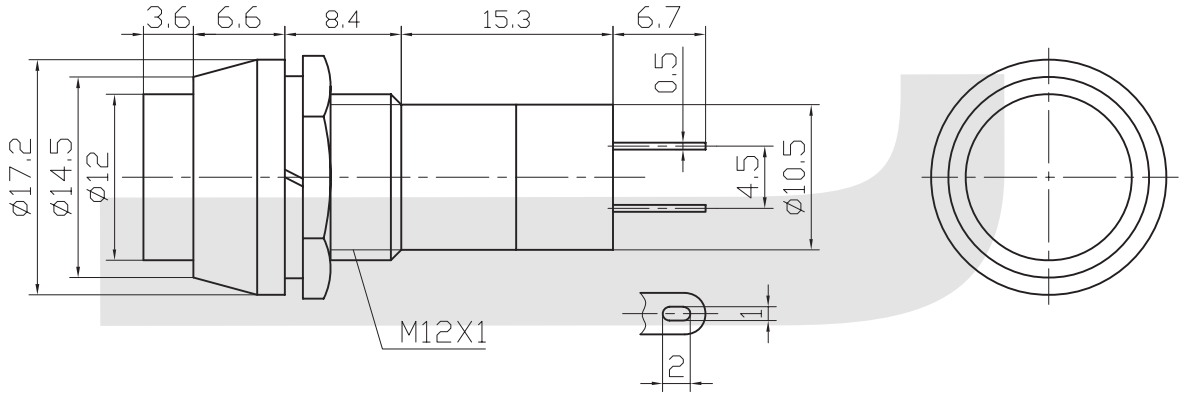

Mounting

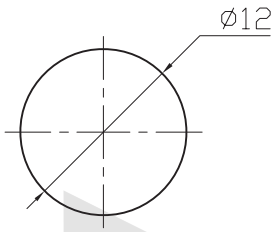

Circuitry

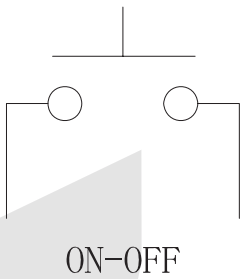

ORDER INFORMATION

KLS7-PBS-006 X X

- Part Number — PBS-006: Push Button Switch Series
- Function: B=ON-OFF; C=ON-(OFF); D=OFF-(ON)
- Button color: R=Red G=Green B=Black

Push Button Switch Series

KLS7-PBS-007 Push Button Switch Series

ELECTRICAL

Rating: 3A 125V AC ,1A 250V AC
Contact resistance: 20mΩ Max
Insulation resistance: 100MΩ/500VDC Min
Withstanding Voltage: AC1000V/1Min
Operating Temperature: -25°C~+85°C
Electrical life: 50000 Cycles



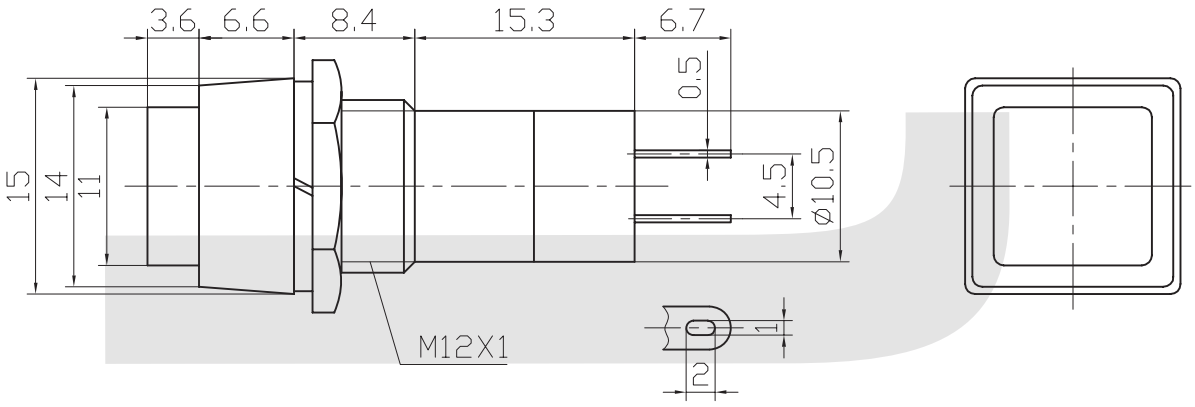

Mounting

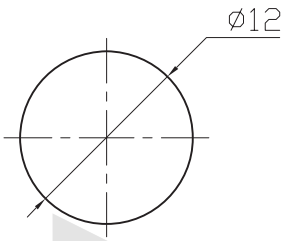

Circuitry

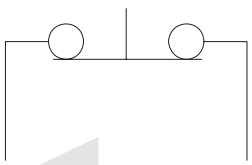

ON-(OFF)

ORDER INFORMATION

KLS7-PBS-007 X X

- Part Number
- PBS-007: Push Button Switch Series
- Function: B=ON-OFF C=ON-(OFF) D=OFF-(ON)
- Button color: R=Red G=Green B=Black

Push Button Switch Series

KLS7-PBS-008 Push Button Switch Series

ELECTRICAL

Rating: 3A 125V AC ,1A 250V AC
Contact resistance: 20mΩ Max
Insulation resistance: 100MΩ/500VDC Min
Withstanding Voltage: AC1000V/1Min
Operating Temperature: -25°C~+85°C
Electrical life: 50000 Cycles



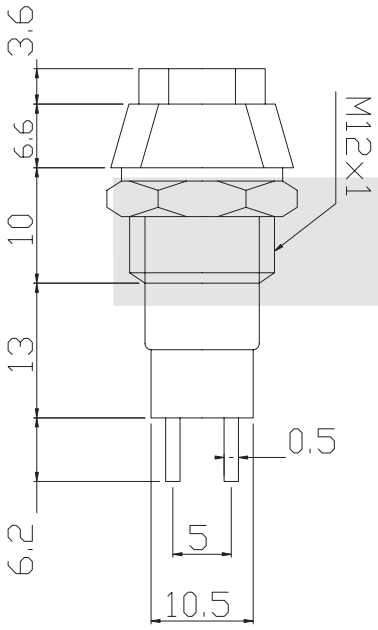

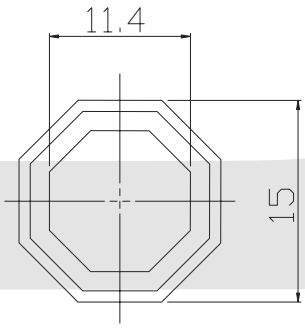

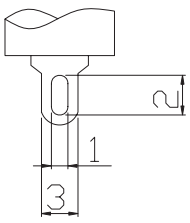

Circuitry

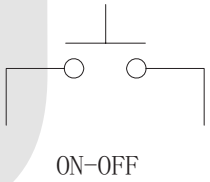

Mounting

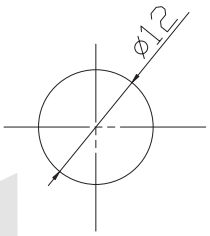

ORDER INFORMATION

KLS7-PBS-008 X X

- Part Number — PBS-008: Push Button Switch Series
- Function: B=ON-OFF; C=ON-(OFF); D=OFF-(ON)
- Button color: R=Red G=Green B=Black

Push Button Switch Series

KLS7-PBS-009 Push Button Switch Series

ELECTRICAL
Rating: 3A 125V AC ,1A 250V AC
Contact resistance: 20mΩ Max
Insulation resistance: 100MΩ/500VDC Min
Withstanding Voltage: AC1000V/1Min
Operating Temperature: -25°C~+85°C
Electrical life: 50000 Cycles



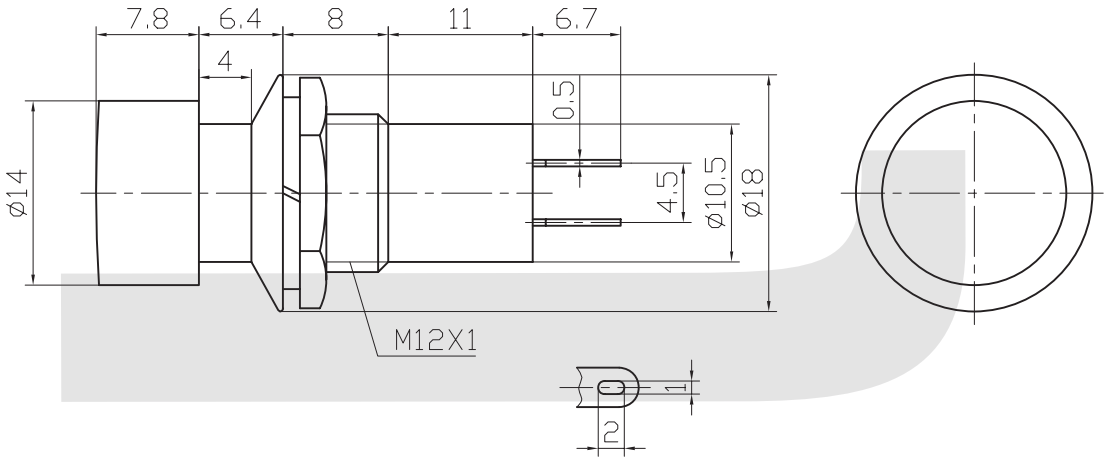

Mounting

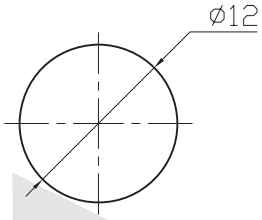

Circuitry

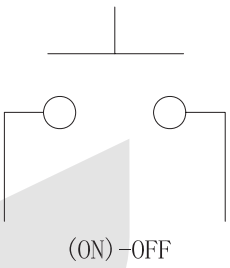

ORDER INFORMATION

KLS7-PBS-009 X X

Part Number — PBS-009: Push Button Switch Series

Function: B=ON-OFF
C=ON-(OFF)
D=OFF-(ON)

Button color: R=Red G=Green B=Black

Push Button Switch Series

KLS7-PBS-010 Push Button Switch Series

ELECTRICAL
Rating: 3A 125V AC ,1A 250V AC
Contact resistance: 20mΩ Max
Insulation resistance: 100MΩ/500VDC Min
Withstanding Voltage: AC1000V/1Min
Operating Temperature: -25°C~+85°C
Electrical life: 50000 Cycles



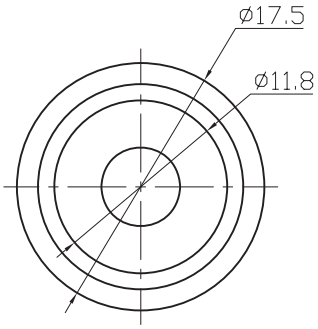

Circuitry

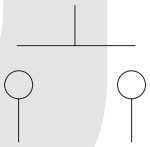

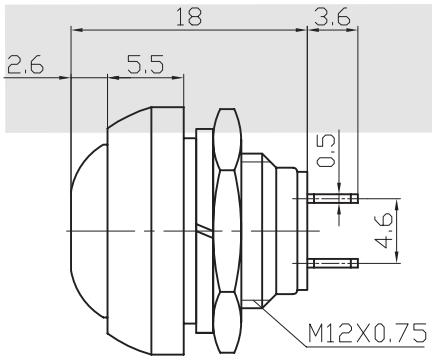

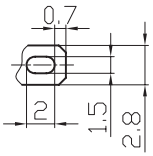

Mounting

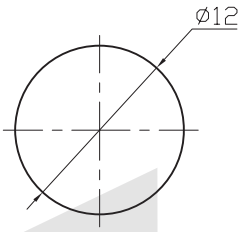

ORDER INFORMATION

KLS7-PBS-010 X X

- Part Number
- PBS-010: Push Button Switch Series
- Function: B=ON-OFF C=ON-(OFF) D=OFF-(ON)
- Button color: R=Red G=Green B=Black

Push Button Switch Series

KLS7-PBS-011 Push Button Switch Series

ELECTRICAL

Rating: 3A 125V AC ,1A 250V AC
Contact resistance: 20mΩ Max
Insulation resistance: 100MΩ/500VDC Min
Withstanding Voltage: AC1000V/1Min
Operating Temperature: -25°C~+85°C
Electrical life: 50000 Cycles



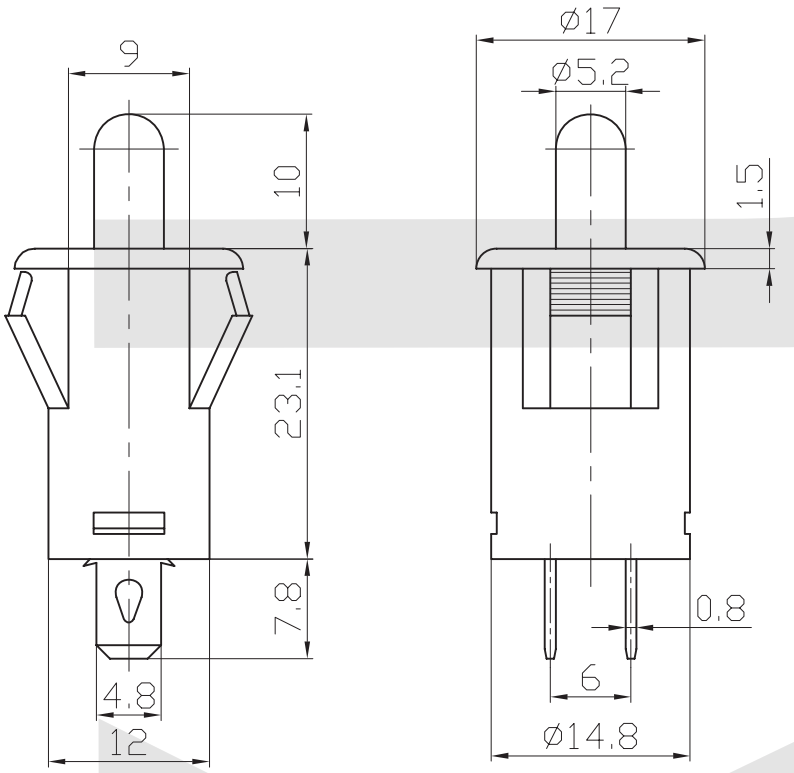

Circuitry

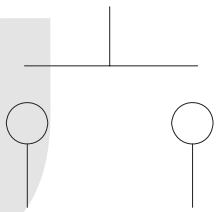

Mounting

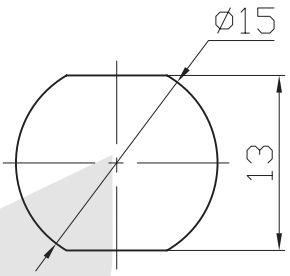

ORDER INFORMATION

KLS7-PBS-011 X X

- Part Number
- PBS-011: Push Button Switch Series
- Function: B=ON-OFF C=ON-(OFF) D=OFF-(ON)
- Button color: R=Red G=Green B=Black

Push Button Switch Series

KLS7-PBS-012 Push Button Switch Series

ELECTRICAL
Rating: 3A 125V AC ,1A 250V AC
Contact resistance: 20mΩ Max
Insulation resistance: 100MΩ/500VDC Min
Withstanding Voltage: AC1000V/1Min
Operating Temperature: -25°C~+85°C
Electrical life: 50000 Cycles



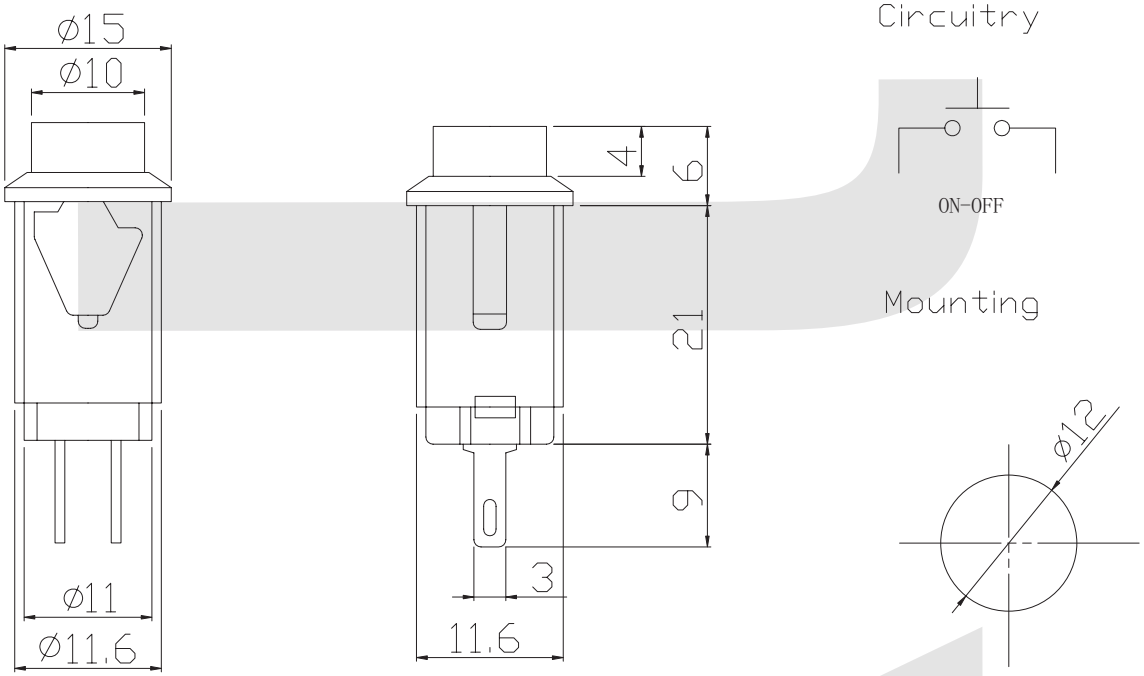

ORDER INFORMATION

KLS7-PBS-012 X X

Part Number — PBS-012: Push Button Switch Series

Function: B=ON-OFF
C=ON-(OFF)
D=OFF-(ON)

Button color: R=Red G=Green B=Black

Push Button Switch Series

KLS7-PBS-018 Push Button Switch Series

ELECTRICAL

Rating: 8A 125V AC ,4A 250V AC
Contact resistance: 20mΩ Max
Insulation resistance: 100MΩ/500VDC Min
Withstanding Voltage: AC1000V/1Min
Operating Temperature: -25°C~+85°C
Electrical life: 50000 Cycles



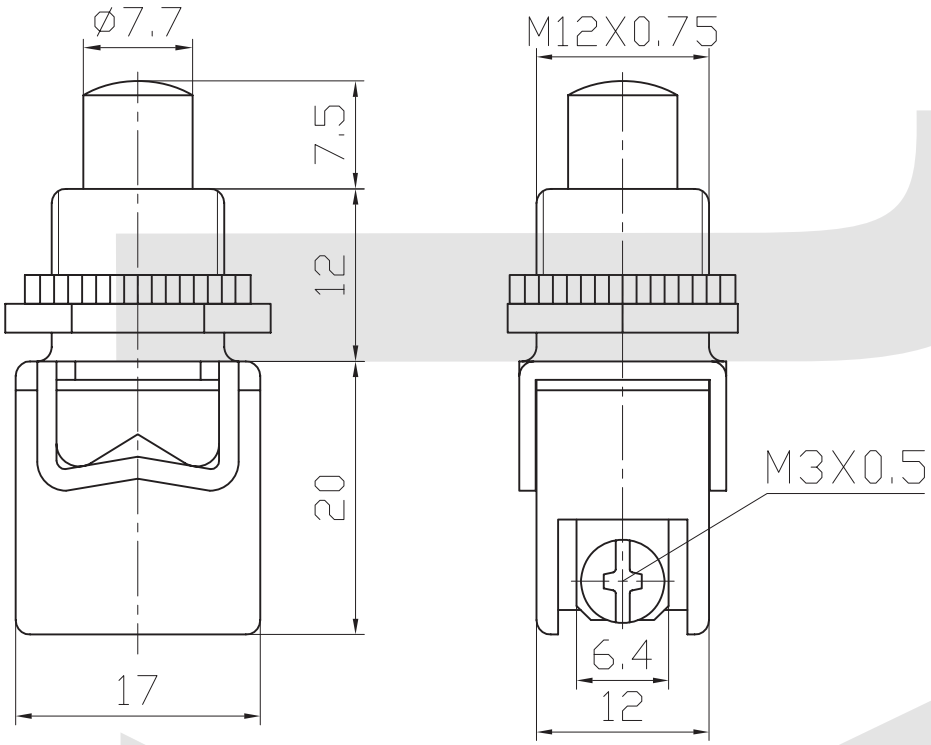

Circuitry

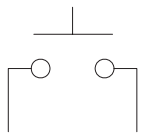

(ON)-OFF

Mounting

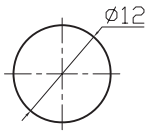

ORDER INFORMATION

KLS7-PBS-018 X

Part Number

PBS-018: Push Button Switch Series

Function: B=ON-OFF
C=ON-(OFF)
D=OFF-(ON)

Push Button Switch Series

KLS7-PBS-020 Push Button Switch Series

ELECTRICAL

Rating: 5A 125V AC ,2.5A 250V AC
Contact resistance: 20mΩ Max
Insulation resistance: 100MΩ/500VDC Min
Withstanding Voltage: AC1000V/1Min
Operating Temperature: -25°C~+85°C
Electrical life: 50000 Cycles



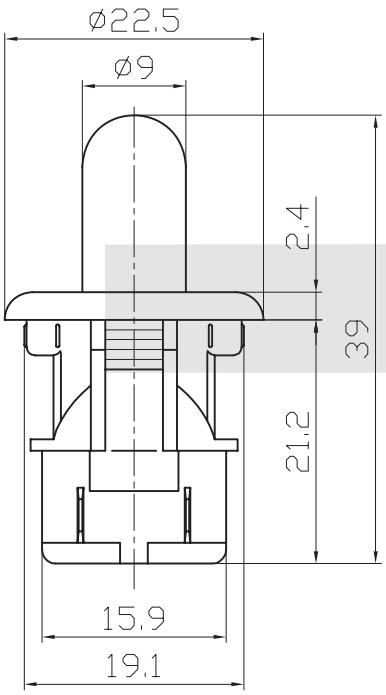

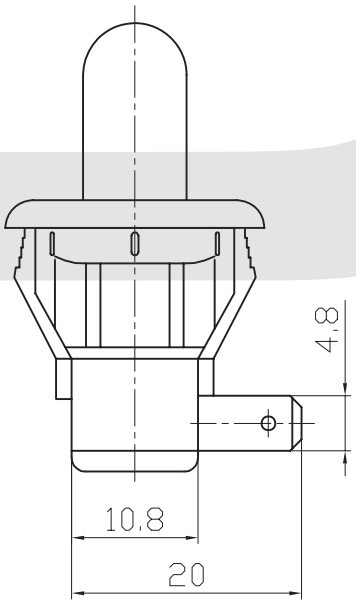

Circuitry

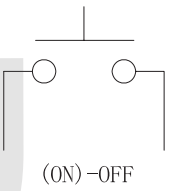

Mounting

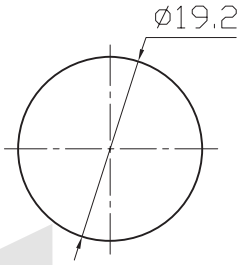

ORDER INFORMATION

KLS7-PBS-020 X

Part Number

PBS-020: Push Button Switch Series

Function: B=ON-OFF
C=ON-(OFF)
D=OFF-(ON)

Push Button Switch Series

KLS7-PBS-020 Push Button Switch Series

ELECTRICAL
Rating: 5A 125V AC ,2.5A 250V AC
Contact resistance: 20mΩ Max
Insulation resistance: 100MΩ/500VDC Min
Withstanding Voltage: AC1000V/1Min
Operating Temperature: -25°C~+85°C
Electrical life: 50000 Cycles



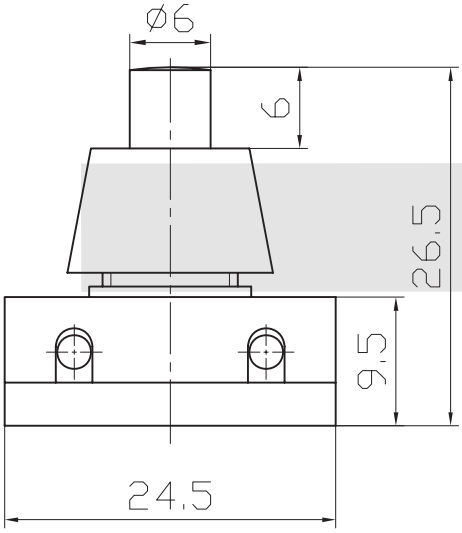

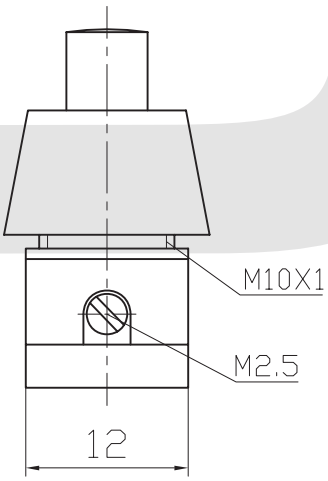

Circuitry

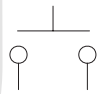

Mounting

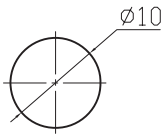

ORDER INFORMATION

KLS7-PBS-021 X

Part Number

PBS-021: Push Button Switch Series

Function: B=ON-OFF
C=ON-(OFF)
D=OFF-(ON)

Push Button Switch Series

KLS7-PBS-003 Push Button Switch Series

ELECTRICAL
Rating: 3A 125V AC ,1A 250V AC
Contact resistance: 20mΩ Max
Insulation resistance: 100MΩ/500VDC Min
Withstanding Voltage: AC1000V/1Min
Operating Temperature: -25°C~+85°C
Electrical life: 50000 Cycles

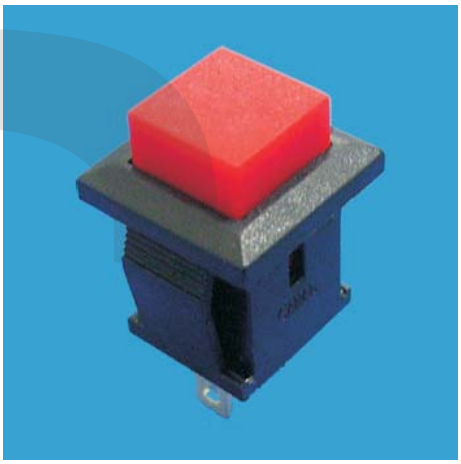

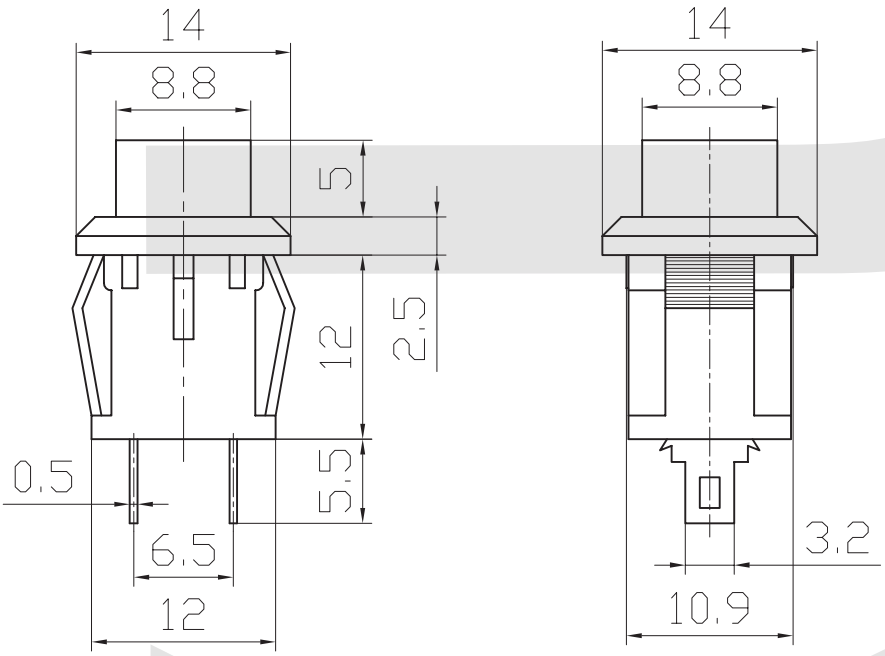

Circuitry

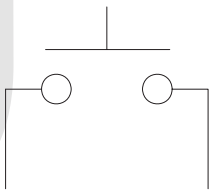

Mounting

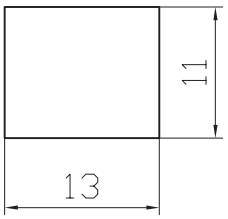

ORDER INFORMATION

KLS7-PBS-003 X X

Part Number — PBS-003: Push Button Switch Series

Function: C=ON-(OFF) D=OFF-(ON)

Button color: R=Red G=Green B=Black

Standard Vertical Push Switch Series

KLS7-P5.8X5.8 Standard Vertical Push Switch Series

ELECTRICAL

Rating :DC30V 0.1A
Insulation Resistance :>100MΩ DC125V
Withstand Voltage :AC 125V 1 minute
Contact Resistance :<100mΩ
Soldering Temper :250°C max.3sec
Mechanical Life :100,000 cycles
Electrical Life :10,000 cycles
Ambient Temper.Used :-25°C to +65°C
Ambient Humidity Used :<85% RH
Operating force :150±80 gf



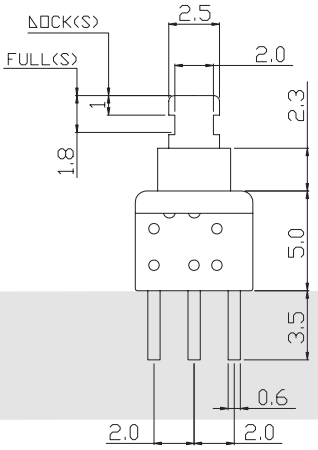

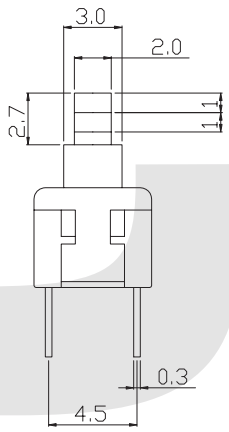

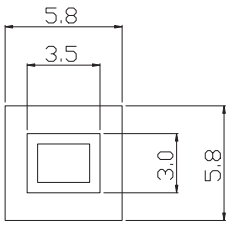

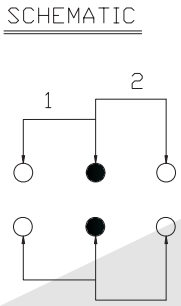

ORDER INFORMATION

KLS7-P5.8x5.8 X

Part Number

Standard Vertical Push Switch Series

0=Non Lock 1=lock

Standard Vertical Push Switch Series

KLS7-P7.0X7.0 Standard Vertical Push Switch Series

ELECTRICAL

Rating :DC30V 0.1A
Insulation Resistance :>100MΩ DC125V
Withstand Voltage :AC 125V 1 minute
Contact Resistance :<100mΩ
Soldering Temper :250°C max.3sec
Mechanical Life :100,000 cycles
Electrical Life :10,000 cycles
Ambient Temper.Used :-25°C to +65°C
Ambient Humidity Used :<85% RH
Operating force :150±80 gf

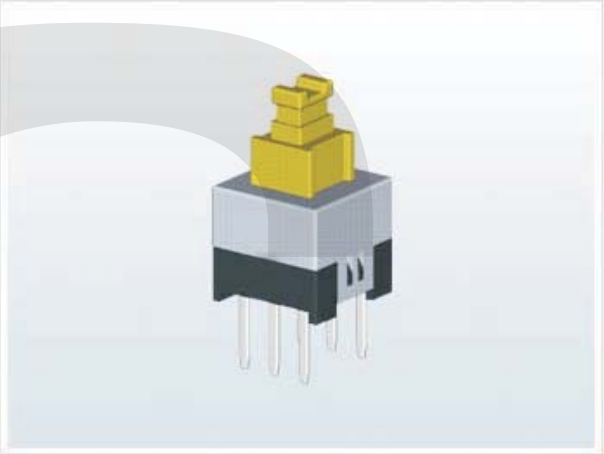

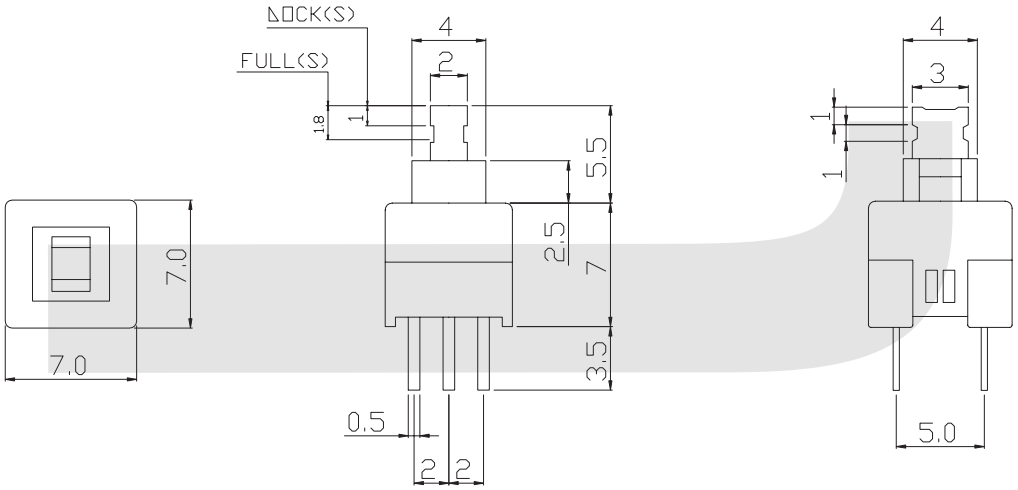

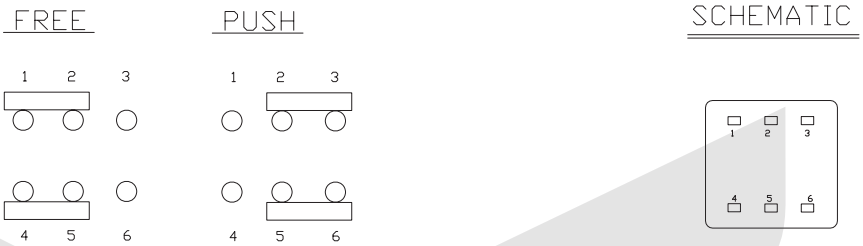

ORDER INFORMATION

KLS7-P7.0x7.0 X

Part Number

Standard Vertical Push Switch Series

0=Non Lock 1=lock

Standard Vertical Push Switch Series

KLS7-P8.0X8.0A Standard Vertical Push Switch Series

ELECTRICAL

Rating :DC30V 0.1A
Insulation Resistance :>100MΩ DC250V
Withstand Voltage :AC 250V 1 minute
Contact Resistance :<50mΩ
Soldering Temper :250°C max.3sec
Mechanical Life :100,000 cycles
Electrical Life :10,000 cycles
Ambient Temper.Used :-25°C to +65°C
Ambient Humidity Used :<85% RH
Operating force :160±80 gf

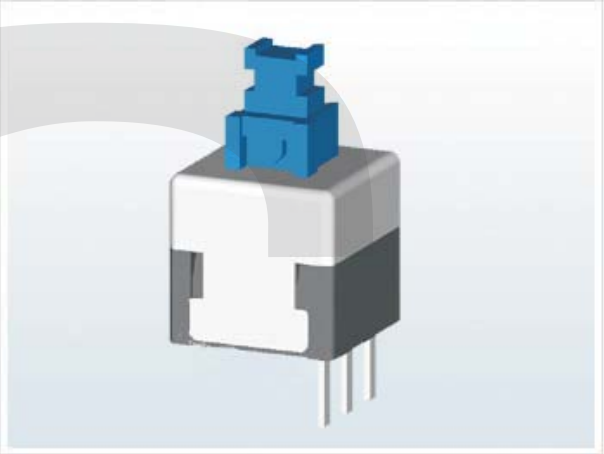

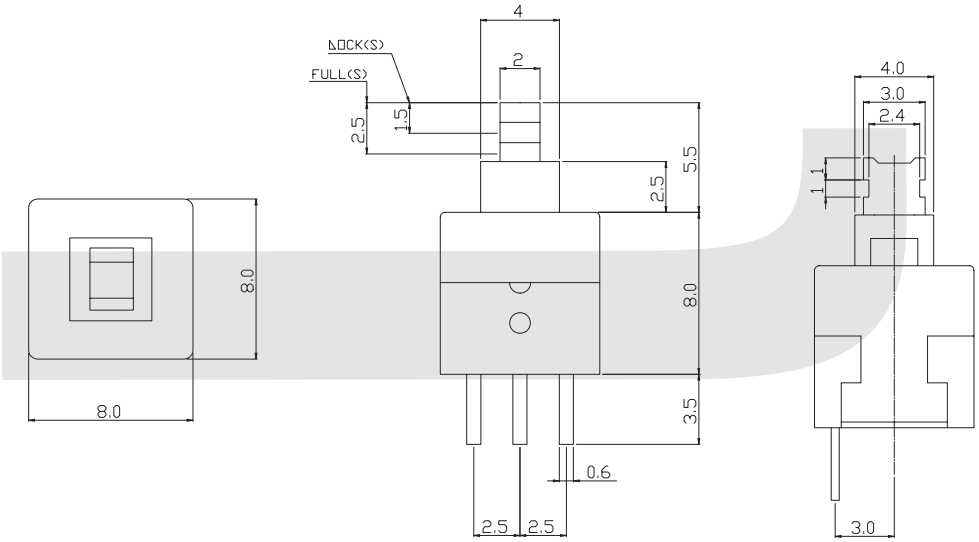

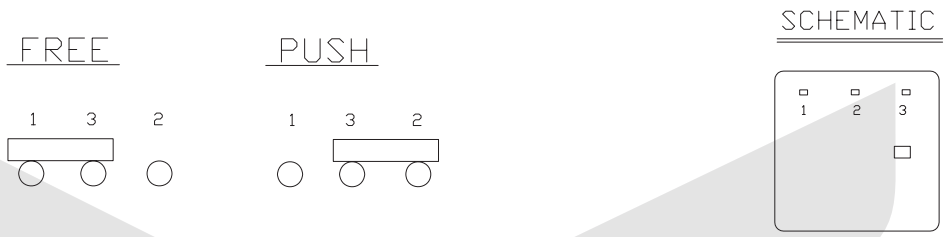

ORDER INFORMATION

KLS7-P8.0x8.0A X

Part Number

Standard Vertical Push Switch Series

0=Non Lock 1=Lock

Standard Vertical Push Switch Series

KLS7-P8.0X8.0B Standard Vertical Push Switch Series



ELECTRICAL

Rating :DC30V 0.1A
Insulation Resistance :>100MΩ DC250V
Withstand Voltage :AC 250V 1 minute
Contact Resistance :<50mΩ
Soldering Temper :250°C max.3sec
Mechanical Life :100,000 cycles
Electrical Life :10,000 cycles
Ambient Temper.Used :-25°C to +65°C
Ambient Humidity Used :<85% RH
Operating force :160±80 gf

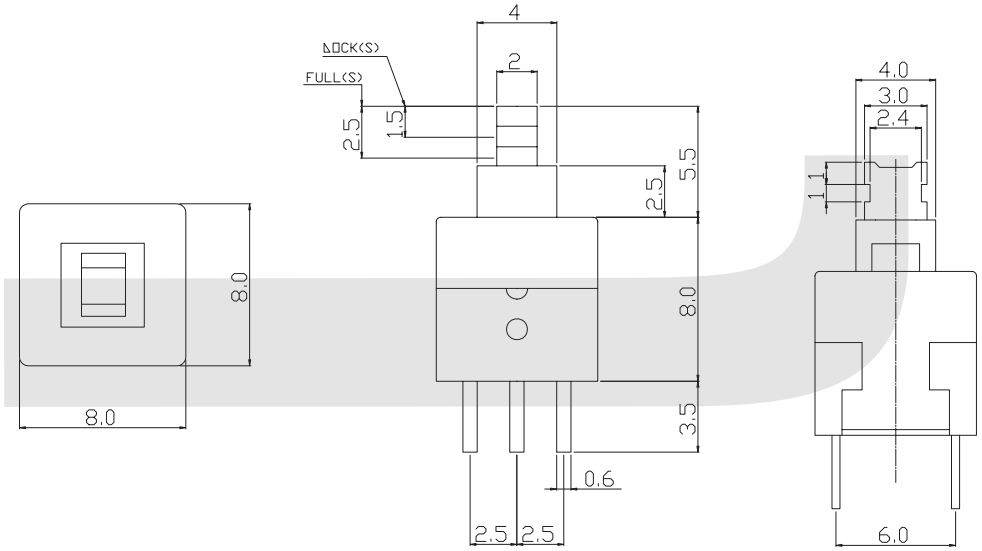

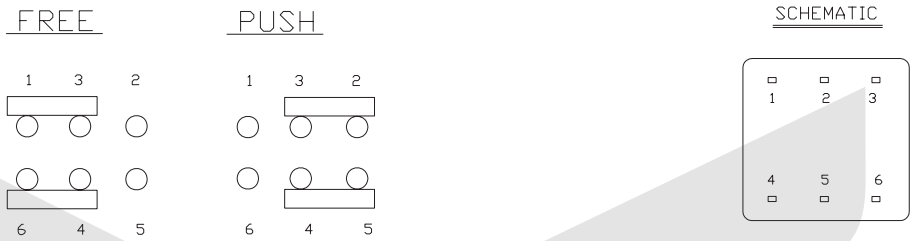

ORDER INFORMATION

KLS7-P8.0x8.0B X

Part Number

Standard Vertical Push Switch Series

0=Non Lock 1=Lock

Standard Vertical Push Switch Series

VII

KLS7-P8.0X8.0C Standard Vertical Push Switch Series

ELECTRICAL

Rating :DC30V 0.1A
Insulation Resistance :>100MΩ DC250V
Withstand Voltage :AC 250V 1 minute
Contact Resistance :<50mΩ
Soldering Temper :250°C max.3sec
Mechanical Life :100,000 cycles
Electrical Life :10,000 cycles
Ambient Temper.Used :-25°C to +65°C
Ambient Humidity Used :<85% RH
Operating force :160±80 gf



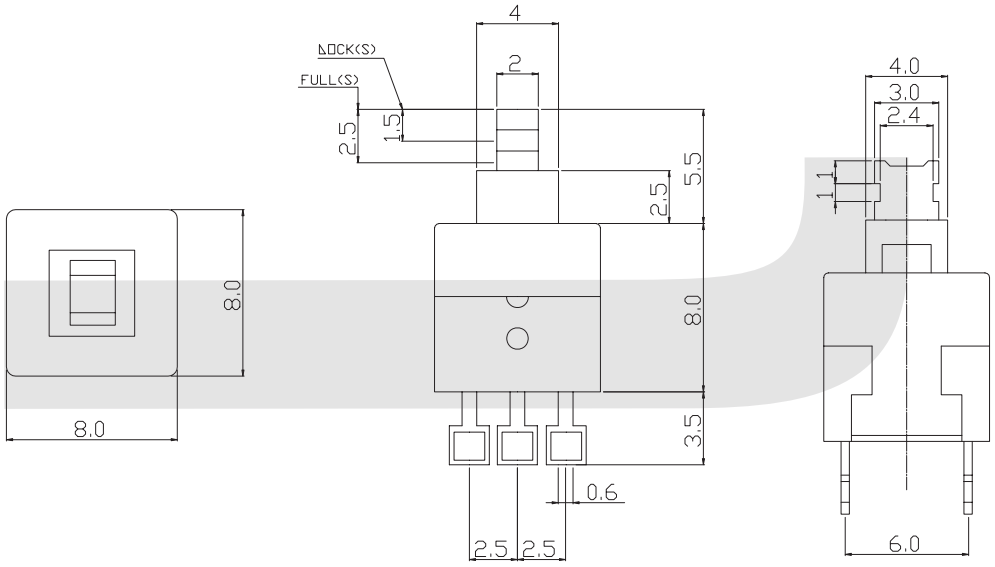

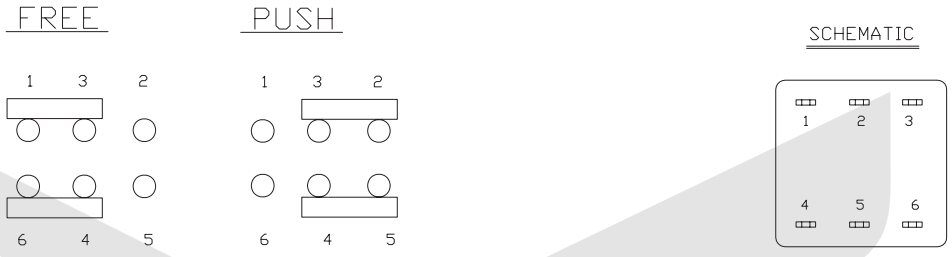

ORDER INFORMATION

KLS7-P8.0x8.0C X

Part Number

Standard Vertical Push Switch Series

0=Non Lock 1=Lock

Standard Vertical Push Switch Series

KLS7-P8.5X8.5A Standard Vertical Push Switch Series



ELECTRICAL

Rating :DC30V 0.3A , DC1.6V 0.5A
Insulation Resistance :>100MΩ DC250V
Withstand Voltage :AC 250V 1 minute
Contact Resistance :<50mΩ
Soldering Temper :250°C max.3sec
Mechanical Life :100,000 cycles
Electrical Life :10,000 cycles
Ambient Temper.Used :-25°C to +65°C
Ambient Humidity Used :<85% RH
Operating force :200±80 gf

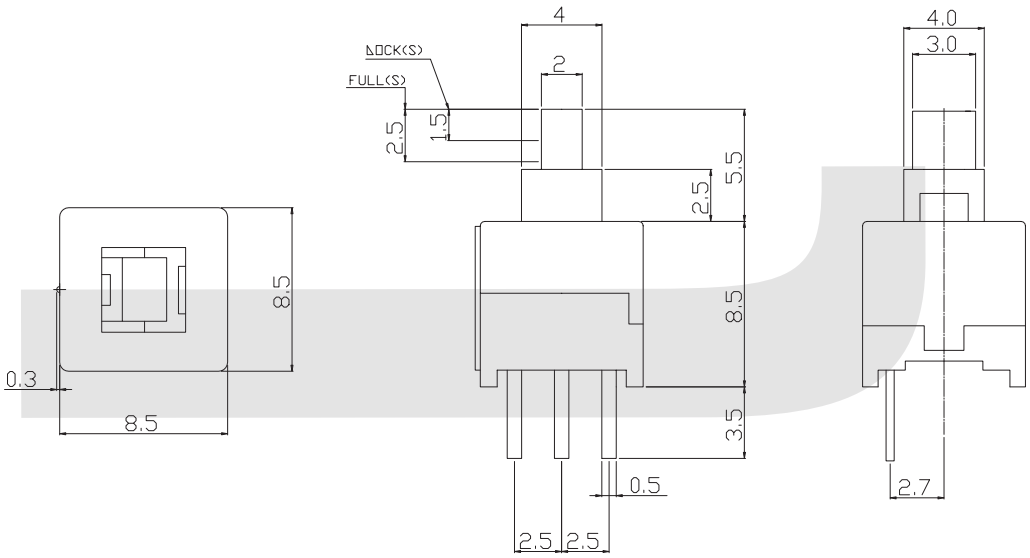

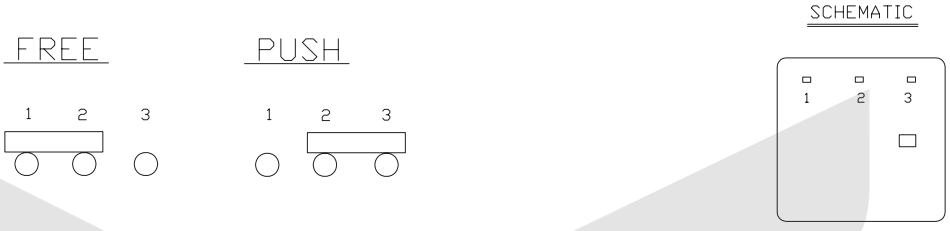

ORDER INFORMATION

KLS7-P8.5x8.5A X

Part Number

Standard Vertical Push Switch Series

0=Non Lock 1=Lock

Standard Vertical Push Switch Series

KLS7-P8.5X8.5B Standard Vertical Push Switch Series



ELECTRICAL

Rating :DC30V 0.3A , DC1.6V 0.5A
Insulation Resistance :>100MΩ DC250V
Withstand Voltage :AC 250V 1 minute
Contact Resistance :<50mΩ
Soldering Temper :250ºC max.3sec
Mechanical Life :100,000 cycles
Electrical Life :10,000 cycles
Ambient Temper.Used :-25ºC to +65ºC
Ambient Humidity Used :<85% RH
Operating force :200±80 gf

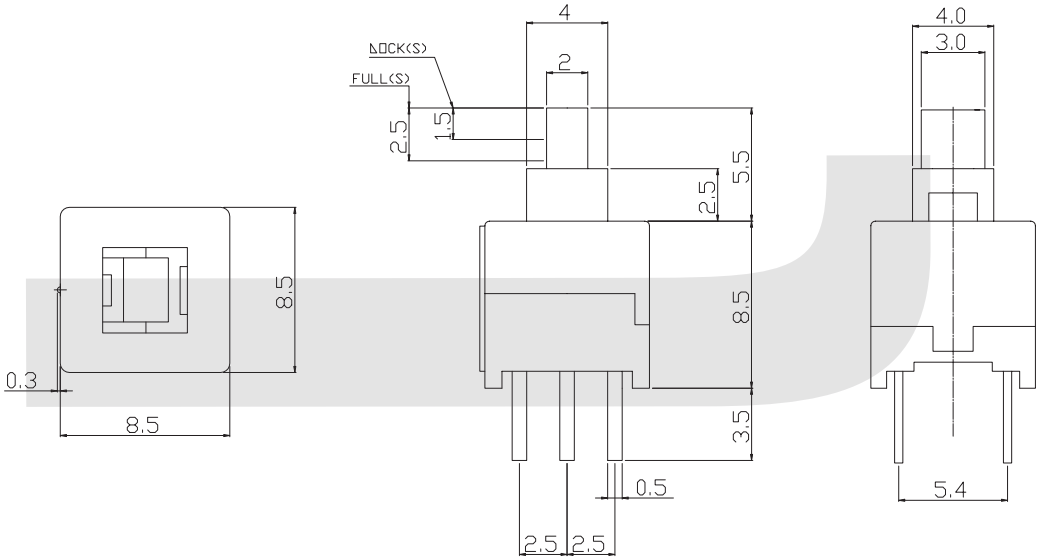



ORDER INFORMATION

KLS7-P8.5x8.5B X

Part Number

Standard Vertical Push Switch Series

0=Non Lock 1=Lock

Push Button Switch Series

KLS7-PBS-016 Push Button Switch Series

ELECTRICAL
Rating: 4A 125V AC ,2A 250V AC
Contact resistance: 20mΩ Max
Insulation resistance: 100MΩ/500VDC Min
Withstanding Voltage: AC1000V/1Min
Operating Temperature: -25°C~+85°C
Electrical life: 50000 Cycles



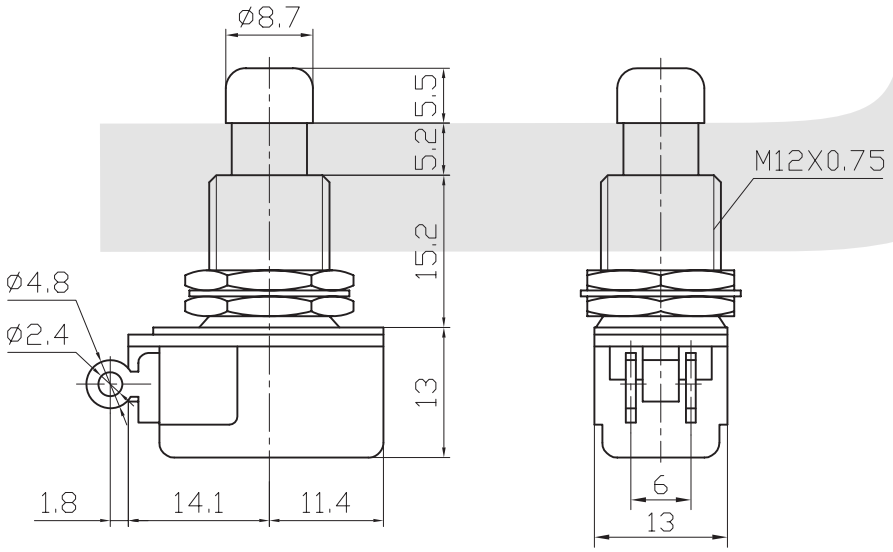

Circuitry

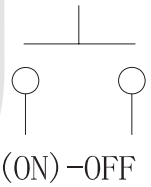

Mounting

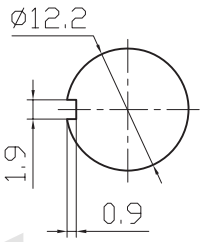

ORDER INFORMATION

KLS7-PBS-016 X

Part Number

PBS-016: Push Button Switch Series

Function: B=ON-OFF
C=ON-(OFF)
D=OFF-(ON)

Push Button Switch Series

VII

KLS7-PBS-017 Push Button Switch Series

ELECTRICAL
Rating: 4A 125V AC ,2A 250V AC
Contact resistance: 20mΩ Max
Insulation resistance: 100MΩ/500VDC Min
Withstanding Voltage: AC1000V/1Min
Operating Temperature: -25°C~+85°C
Electrical life: 50000 Cycles



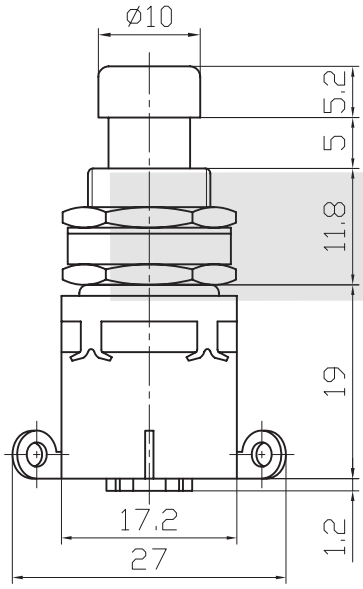

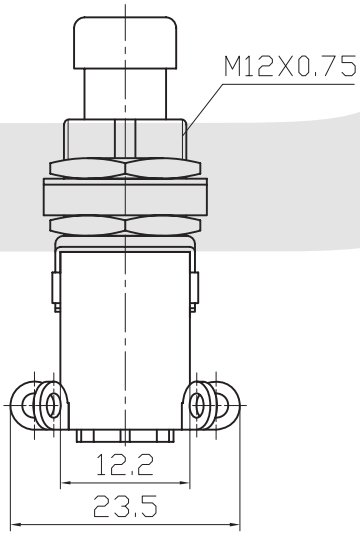

Circuitry

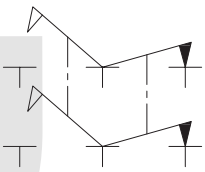

□N-□N

Mounting

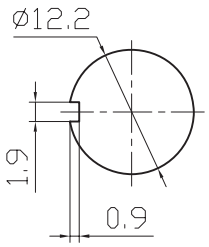

ORDER INFORMATION

KLS7-PBS-017 X 1 X

- Part Number
- PBS-017: Push Button Switch Series
- Sleeve length L = 14.2; 11.8; 9.8
- 1=Single pole 2=Double pole
- Function: B=ON-OFF
  C=ON-(OFF)
  D=OFF-(ON)

Push Button Switches Series

KLS7-PBS-M12-01

SPECIFICATIONS

Rating: 2A 36V DC
Mounting Hole: Ø12 mm
Insulation resistance: 1,000MΩ Mim
Contact resistance: 50MΩ max.
Dielectric Strength: AC 2,000V 1 Minute
Operating Temperature: -20oC ~ +55oC
Mechanical Life: 1,000,000 times
Electrical Life: 20,000 cycles

FUNCTION:

* 1No 1Nc
* Non Lock Type

Approvals : RoHS,IP65



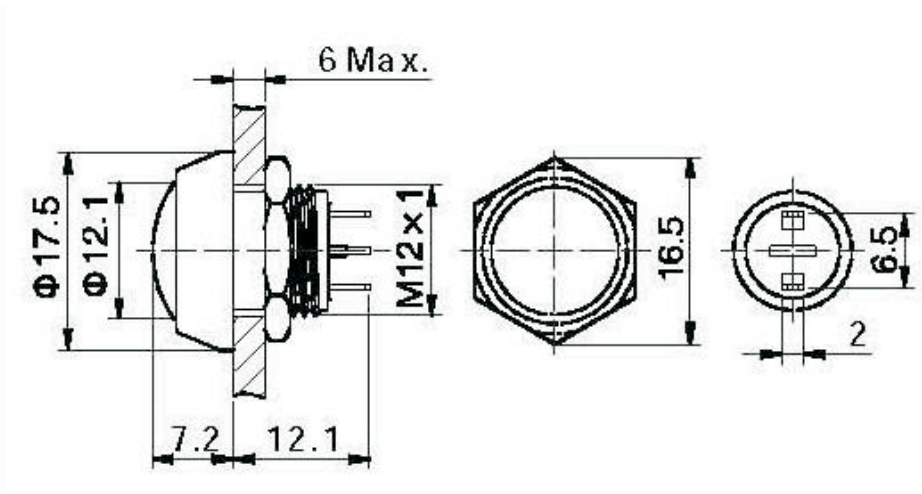

ORDER INFORMATION

Push Button Switches Series

KLS7-PBS-M16-01

SPECIFICATIONS

Rating: 2A 36V DC
Mounting Hole: Ø16 mm
Insulation resistance: 1,000MΩ Mim
Contact resistance: 50MΩ max.
Dielectric Strength: AC 2,000V 1 Minute
Operating Temperature: -20 C ~ +55°C
Mechanical Life: 1,000,000 times
Electrical Life: 20,000 cycles

FUNCTION:

* 1No 1Nc
* Non Lock Type

Approvals : RoHS,IP65



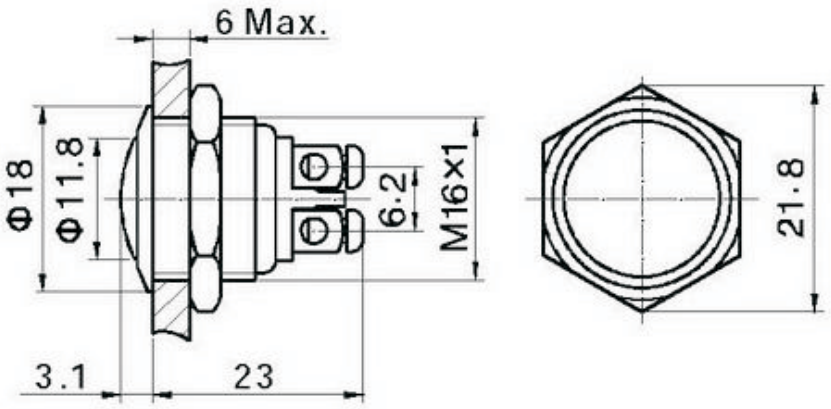

ORDER INFORMATION

Push Button Switches Series

KLS7-PBS-M16-02

SPECIFICATIONS

Rating: 2A 36V DC
Mounting Hole: Ø16 mm
Insulation resistance: 1,000MΩ Mim
Contact resistance: 50MΩ max.
Dielectric Strength: AC 2,000V 1 Minute
Operating Temperature: -20 C ~ +55°C
Mechanical Life: 1,000,000 times
Electrical Life: 20,000 cycles

FUNCTION:

* 1No 1Nc
* Non Lock Type

Approvals : RoHS,IP65



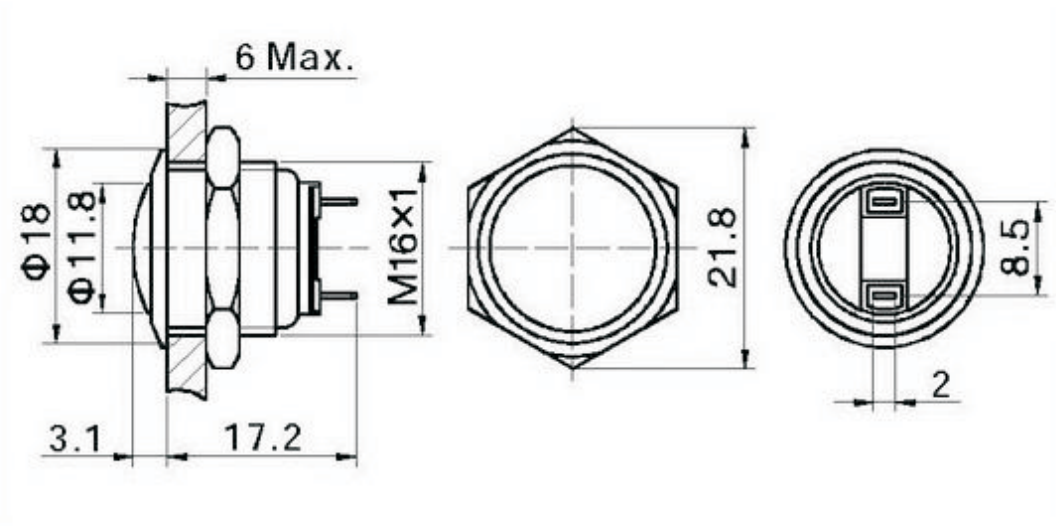

ORDER INFORMATION

Push Button Switches Series

KLS7-PBS-M16-03

SPECIFICATIONS

Rating: 2A 36V DC
Mounting Hole: Ø16 mm
Insulation resistance: 1,000MΩ Mim
Contact resistance: 50MΩ max.
Dielectric Strength: AC 2,000V 1 Minute
Operating Temperature: -20 C ~ +55°C
Mechanical Life: 1,000,000 times
Electrical Life: 20,000 cycles

FUNCTION:

* 1No 1Nc
* Non Lock Type

Approvals : RoHS,IP65



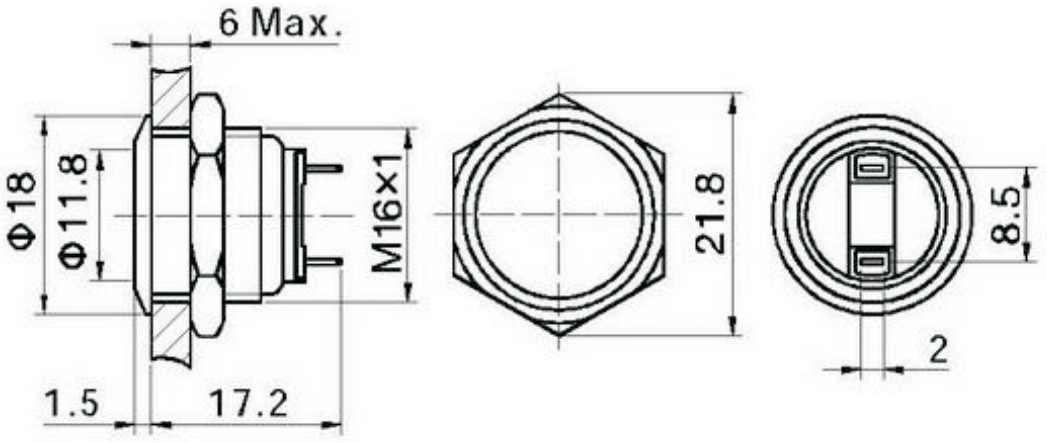

ORDER INFORMATION

LED Push Button Switches series

KLS7-LED-TS

SPECIFICATIONS

Rating:50mA 12VDC
Insulation Resistance:100MΩ Min (at 500 VDC)
Dielectric Strength:AC 250V (50/60 Hz for 1minute)
Contact Resistance 100mΩ Max. (Initial)
Electrically Life:100,000 Cycles Min
Ambient Temperature:-20 C~+70°C
Operating Force:180 ± 50gf , 250 5 0gf
Travel:0.25 ± 0.1mm

FEATURES:

Contact Reliability Clip type contacts are applied to ensure high reliability.
For PC Board Terminals are IC pitched (multiple of 2.54mm).
By a particular terminal shape,the switch tightly when solder-dipped.
Protection from Flux Entry Terminals are all completely sealed by epoxy.
Many LED lights are a available.

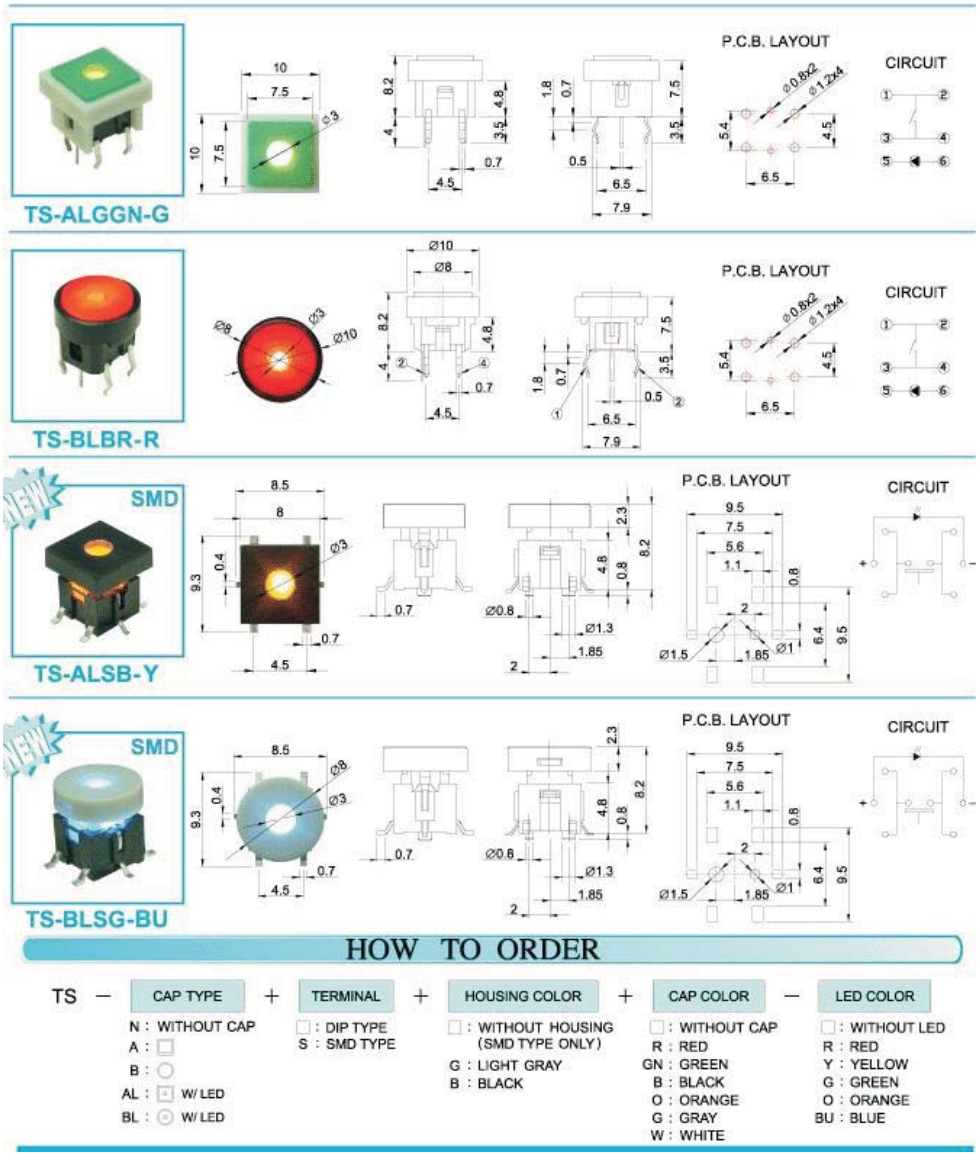

HOW TO ORDER

TS – CAP TYPE + TERMINAL + HOUSING COLOR + CAP COLOR – LED COLOR

CAP TYPE	TERMINAL	HOUSING COLOR	CAP COLOR	LED COLOR
N : WITHOUT CAP	□ : DIP TYPE	□ : WITHOUT HOUSING (SMD TYPE ONLY)	□ : WITHOUT CAP	□ : WITHOUT LED
A : □	S : SMD TYPE	G : LIGHT GRAY	R : RED	R : RED
B : ○		B : BLACK	GN : GREEN	Y : YELLOW
AL : □ W/ LED			B : BLACK	G : GREEN
BL : ○ W/ LED			O : ORANGE	O : ORANGE
			G : GRAY	BU : BLUE
			W : WHITE	

LED Push Button Switches series

VII

KLS7-LED-SPA

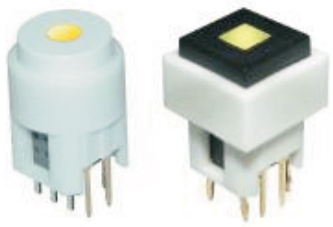

SPECIFICATION:

Item	SPA-A Type & SPA-M Type.	SPA-T Type.
Current rating	100mA.	50mA.
Voltage rating	30V DC.	12V DC.
Led rating	See the table below.	See the table below.
Circuit	DPDT.	SPST.
Total travel	Max. 1.9mm; Lock 1.5mm.	0.3±0.2mm.
Contact resistance	100mΩ Max. (initial)	100mΩ Max. (initial)
Insulation resistance	100MΩ Min at 500V DC.	100MΩ Min.
Operating temperature	-36°C ~ +65°C.	+10°C ~ +60°C.
Operating force	200±80g.	180±50g.
Life	10,000 Cycles Min.	800,000 Cycles Min.
Soldering temperature	250°C for 3 sec.	250°C for 3 sec.

MATERIALS:

S/W Button	Polyacetal. (POM)	Housing	Polyamide. (PA)
S/W Base	Polyamide. (PA)	Lens	Polycarbonate. (PC)
S/W Terminal	Brass with Silver plating.	Contact	Phosphor bronze (PBS) with Silver plating.
Spring	Piano wire.	Cover	Acrylonitrile Butadine Styrene. (ABS)
Cap	Polycarbonate. (PC)	Led terminal	Phosphor bronze (PBS) with Gold plating.
Act. Dome	Stainless steel with Silver plating.		

NEW

DPDT (Lock)



SPA-A-SA-CV04-23

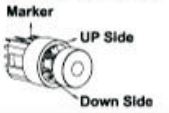

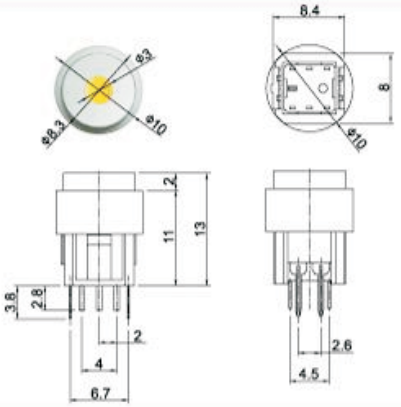

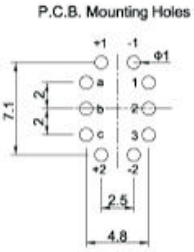

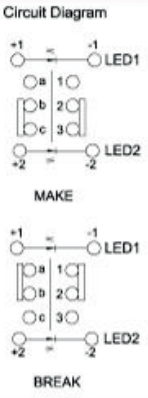

NEW

SPST (Tact)



SPA-T-CA-CV05-23

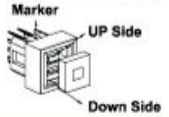

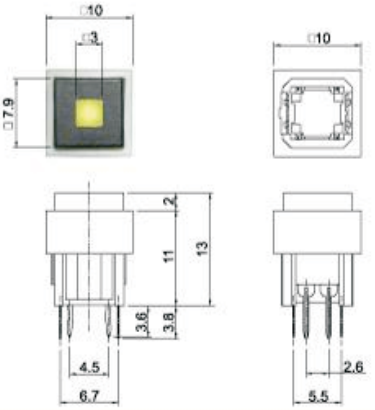

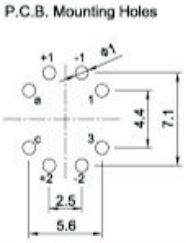

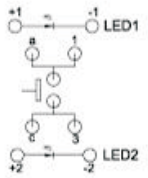

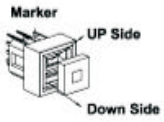

HOW TO ORDER

SPA – FUNCTION – HOUSING TYPE – CV + CAP COLOR –

FUNCTION	HOUSING TYPE	CAP COLOR
A : LOCK	SA : SPHERICAL	04 WHITE
M : MOMENTARY	CA : CUBOIDAL	05 BLACK
T : TACT		

LED COLOR		
CODE	UP	DOWN
12	RED	YELLOW
13	RED	GREEN
1P3	RED	PURE GREEN
14	RED	WHITE
17	RED	BLUE
23	YELLOW	GREEN
2P3	YELLOW	PURE GREEN
24	YELLOW	WHITE
27	YELLOW	BLUE
3P3	GREEN	PURE GREEN
34	GREEN	WHITE
37	GREEN	BLUE
P34	PURE GREEN	WHITE
P37	PURE GREEN	BLUE
47	WHITE	BLUE

Switch

KLS electronic
www.cnkls.com

DIP Switch Series

KLS7-LED-SPA



DPDT (Lock)



SPA-A-SA-2V13-13

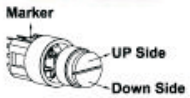

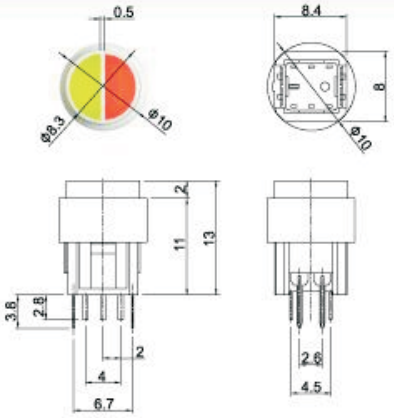

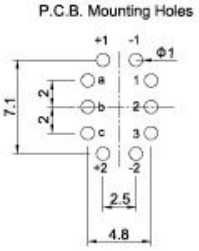

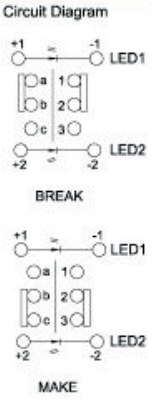

SPST (Tact)



SPA-T-CA-2V12-12

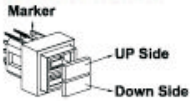

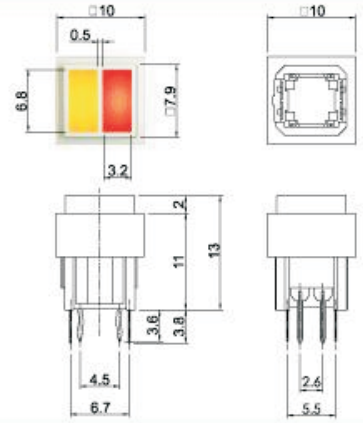

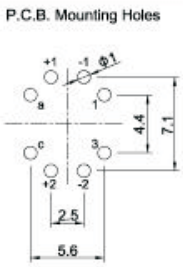

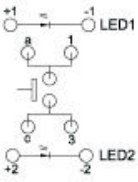

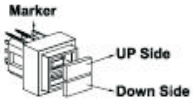

HOW TO ORDER

SPA – [FUNCTION] – [HOUSING TYPE] – 2V + [LENS COLOR] – [LED COLOR]

T : TACTILE
M : MOMENTARY
A : ALTERNATE

SA : SPHERICAL
CA : CUBOIDAL

LENS COLOR		
CODE	UP	DOWN
12	RED	YELLOW
13	RED	GREEN
14	RED	WHITE
17	RED	BLUE
23	YELLOW	GREEN
24	YELLOW	WHITE
27	YELLOW	BLUE
34	GREEN	WHITE
37	GREEN	BLUE
44	WHITE	WHITE
47	WHITE	BLUE

LED COLOR		
CODE	UP	DOWN
12	RED	YELLOW
13	RED	GREEN
1P3	RED	PURE GREEN
14	RED	WHITE
17	RED	BLUE
23	YELLOW	GREEN
2P3	YELLOW	PURE GREEN
24	YELLOW	WHITE
27	YELLOW	BLUE
3P3	GREEN	PURE GREEN
34	GREEN	WHITE
37	GREEN	BLUE
P34	PURE GREEN	WHITE
P37	PURE GREEN	BLUE
47	WHITE	BLUE

LED Push Button Switches series

KLS7-LED-SPB

SPECIFICATIONS

Rating:0.1A 30 VDC
Operating Force: 150g Non Lock
180g Lock
With LED
Insulation Resistance:100 MΩ (minDC 500V)
Operating Temperature: 0 C ~ 55°C
Mechanical Life: 100,000 cycles
Electrical Life: 10,000 cycles

LED Color FUNCTION:

R=Red
G=Green
Y= Yellow



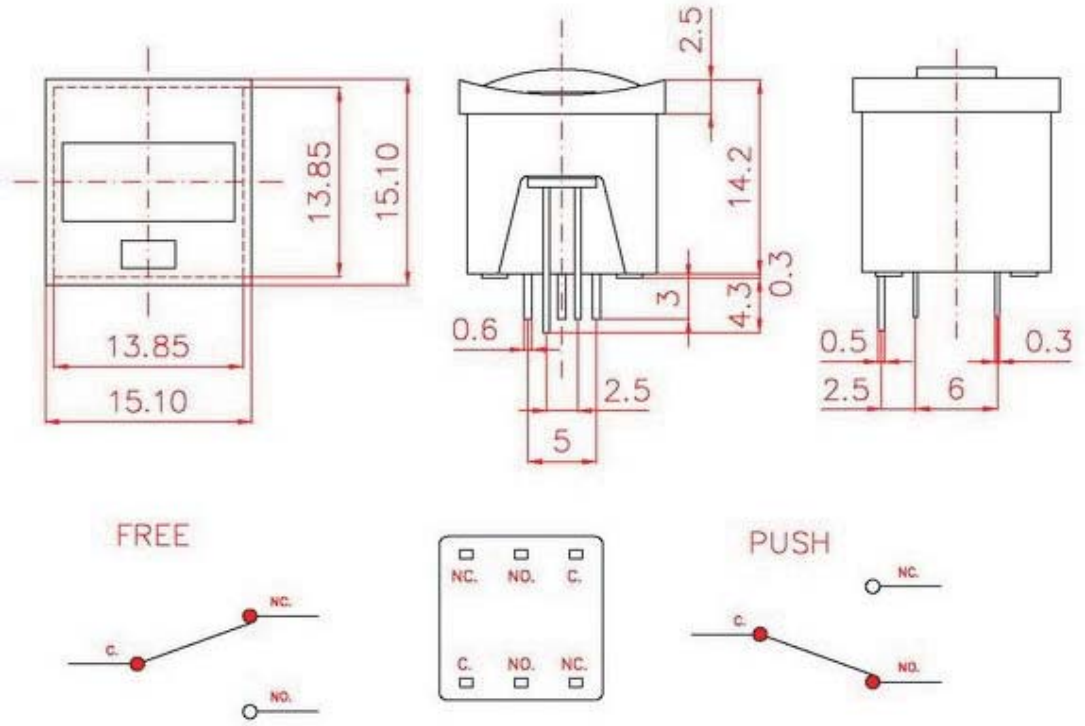

ORDER INFORMATION

LED Push Button Switches series

KLS7-LED-MP86

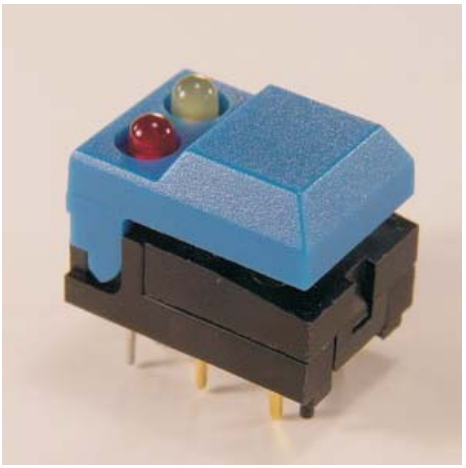



SPECIFICATION:

CIRCUIT	: SPDT
CURRENT RATING	: 12mA.
VOLTAGE RATING	: 24V DC.
CONTACT RESISTANCE	: 50mΩ Max.(initial)
INSULATION RESISTANCE	: 100MΩ Min.
OPERATING FORCE	: 170gf ± 50gf
TOTAL TRAVEL	: 2.5mm±0.2mm
OPERATING LIFE	: 500,000 Cycles Min.
SOLDERING TEMPERATURE	: 250℃ Max. for 3 sec
FUNCTION	: Momentary
OPERATING TEMPERATURE	: +10℃ ~ +60℃

MATERIALS:

CAP	: ABS
CASE	: Nylon
FIXED CONTACT	: PBS+Au
MOVING CONTACT	: PBS+Au

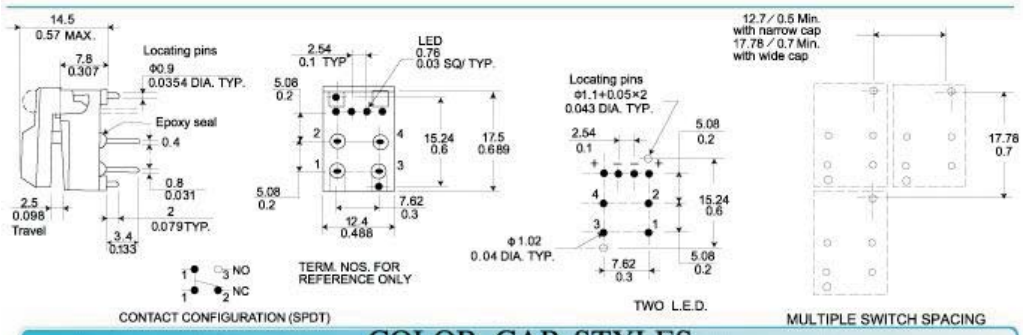

COLOR CAP STYLES

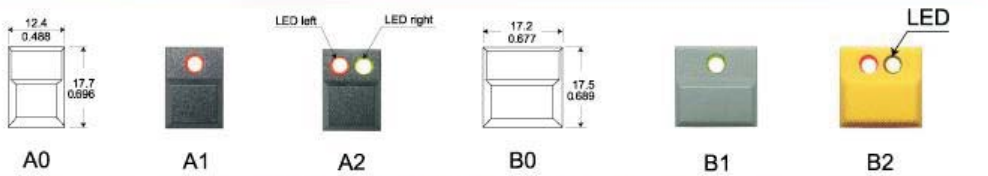

TRANSPARENT CAP STYLES

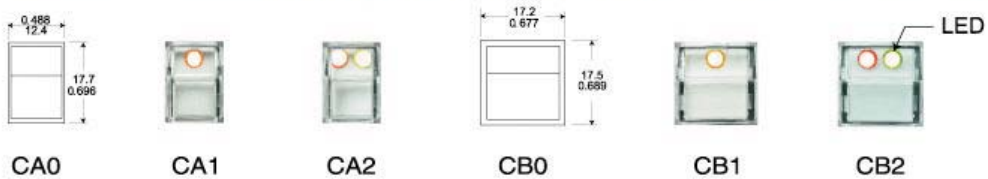

LED Push Button Switches series

KLS7-LED-ST

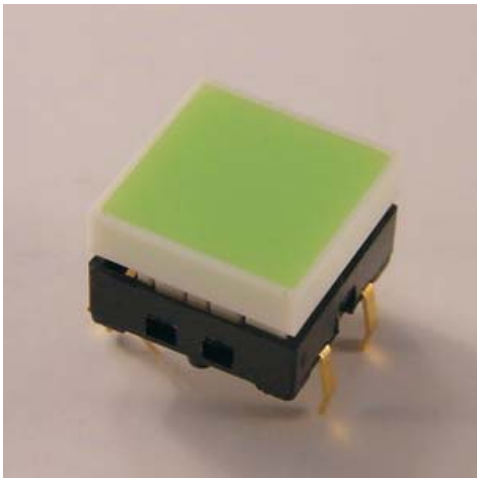

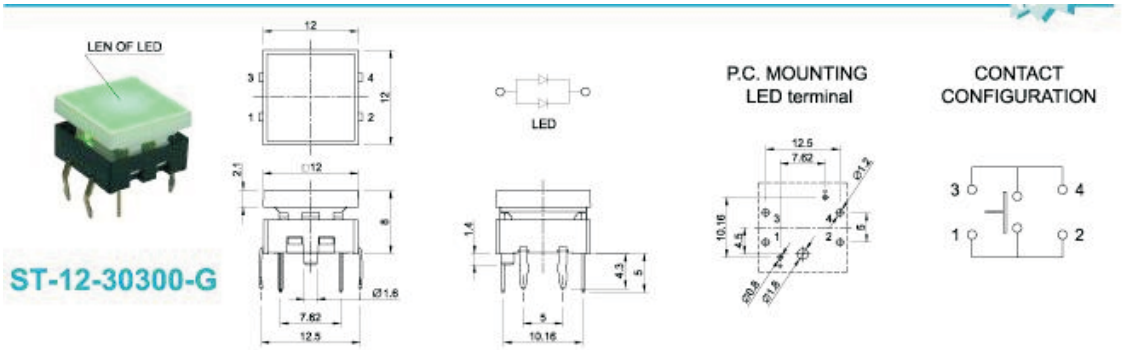





SPECIFICATION:

Rating	: 50mA 12V DC.
Circuit	: SPST.
Travel	: 0.3±0.1mm.
Contact resistance	: 100mΩ Max. (initial)
Insulation resistance	: 100MΩ Min.
Operating temperature	: -10℃ ~ +60℃.
Operating force	: 250±50g.
Life	: 100,000 Cycles Min.

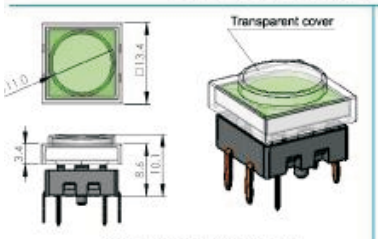

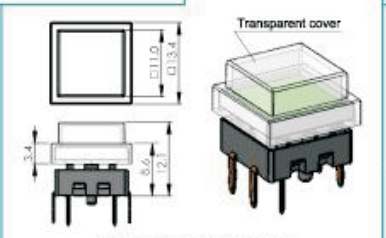

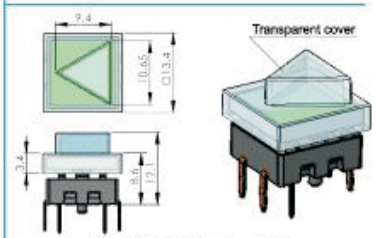

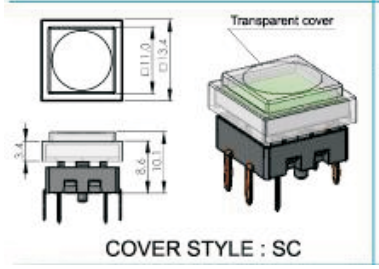

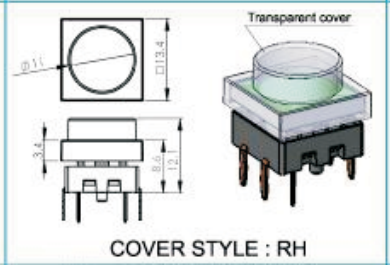

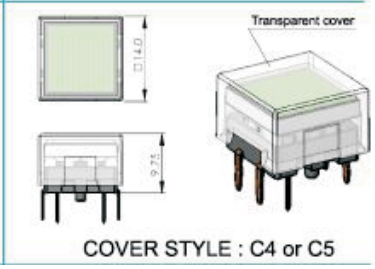

DIP Switch Series

KLS7-LED-ST

HOW TO ORDER

MODEL NO.	CAP COLOR	LED COLOR	TRANSPARENT COVER STYLE	MARKING TYPE	MARKING POSITION
ST-12	1 : Red 2 : Yellow 3 : Green 4 : White 5 : Transparent 6 : Orange 7 : Blue	00 : Without LED 01 : Red S2 : Super Yellow 03 : Green S3 : Super Green	00 : Without Cover FC : Flat/clear RC : Round h=4.9mm/clear RH : Round h=6.9mm/clear SC : Square h=4.9mm/clear SH : Square h=6.9mm/clear UT : UP Triangle/clear DT : Down Triangle/clear RT : Right Triangle/clear LT : Left Triangle/clear C5 : Flat cover/clear C4 : Flat cover/white (Solid)	□ : Non D6 : Power E0 : D7 : ON OFF H9 : D8 : ON Others : For inquiry	□ : Non PO : Laser-Engraving on Transparent Cover PI : Laser-Engraving on Cap ※M : Print on Transparent Mylar

※Transparent Mylar

0	1	2	3	4	5	6	7	8	9
A	B	C	D	E	F	G	H	I	J
K	L	M	N	O	P	Q	R	S	T
U	V	W	X	Y	Z				

※put in and assembled by customer



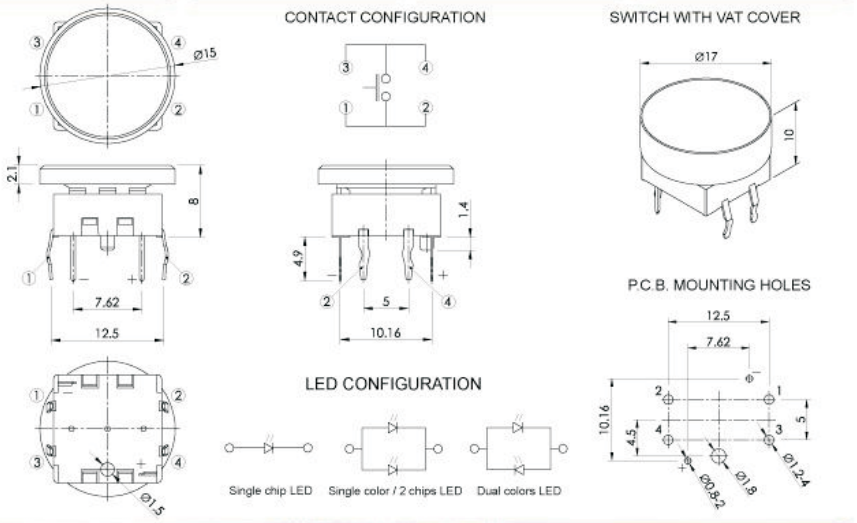

HOW TO ORDER

MODEL NO.	CAP COLOR	LED COLOR	COVER STYLE
SPL15	1 : Red 2 : Yellow 3 : Green 4 : White 5 : Transparent 6 : Orange 7 : Blue	00 : Without LED 01 : Red S2 : Super Yellow 03 : Green S3 : Super Green P3S : Pure Green(single) 4S : White(single) 7S : Blue(single) 17 : Red/Blue 1P3 : Red/Pure Green P37 : Pure Green/Blue	□ : Without Cover VAT : Transparent

LED Push Button Switches series

KLS7-LED-SPJ

VII

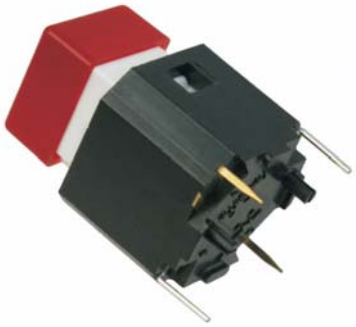

SPJ – TERMINAL – LED COLOR – CAP TYPE – CAP COLOR

TERMINAL	LED COLOR	CAP TYPE	CAP COLOR
S : SMD TYPE P : DIP TYPE	N : WITHOUT LED 1 : RED 2 : YELLOW 3 : GREEN 4 : WHITE 7 : BLUE	N : WITHOUT CAP FC : FC TYPE	T : TRANSPARENCY 7 : WHITE

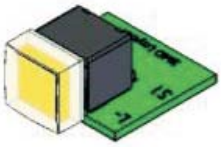

SPECIFICATION:

Contact arrangement	:	SPST. (Tact)
Rating	:	50mA 12V DC.
Contact resistance	:	100mΩ Max. (initial)
Insulation resistance	:	100MΩ Min at 100V DC.
Solder specifications	:	250°C Max for 3 sec.
Operating force	:	200±50g.
Total traver	:	0.3±0.1mm.
Operating life	:	100,000 Cycles Min.
Dielectric strength	:	250V AC 1 minute.

MATERIALS:

Cap	:	PC.
Base	:	LCP.
Reflector	:	PA9T.
Film insert	:	White plastic tape.
Terminal	:	Brass with gold plating.
Led	:	Resin(mold) epoxy wire.
Waterproof cushion	:	Transparent-white paste.
Action dome	:	Stainless steel with silver plating

NEW



SPJ-P-1-FC-7

Contact Configuration



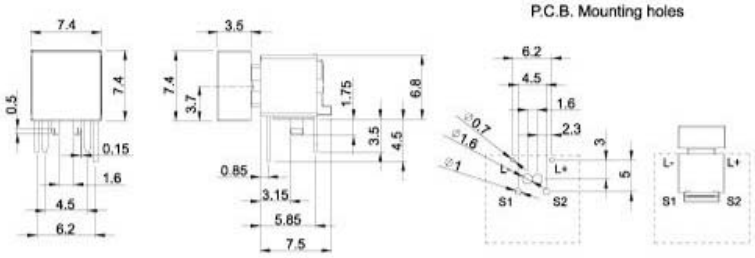

NEW



SPJ-P-1-N

Contact Configuration



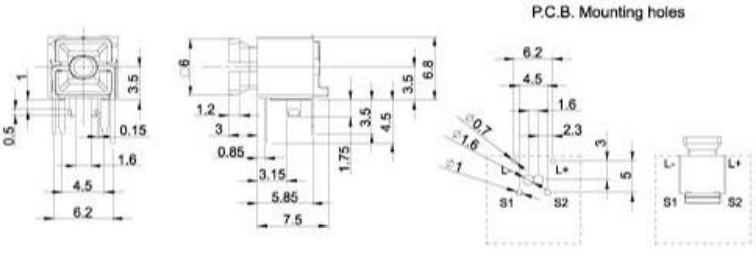

NEW



SPJ-S-3-FC-T

Contact Configuration



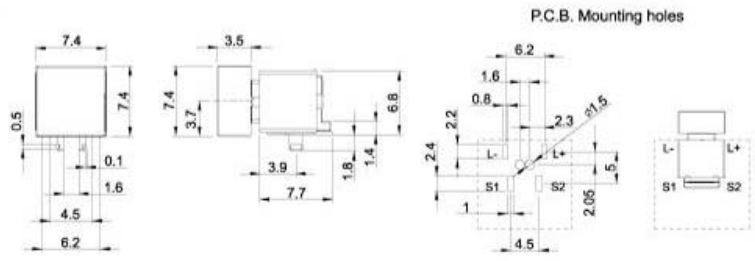

LED Push Button Switches series

KLS7-LED-PB-M16-01

SPECIFICATIONS

Rating: 2A 36V DC
Mounting Hole: Ø16 mm
Insulation Resistance: 1,000MΩ Mim
Contact Resistance:50MΩ Max.
Dielectric Strength: AC 2,000V 1 Minute
Operating Temperature: -20℃ ~ +55℃
Mechanical Life: 1,000,000 cycles
Electrical Life: 20,000 cycles
Function:
1No 1Nc
Non Lock Type
LED Color : Red,Yellow,Orange (1.7V AC/DC)
Green,Blue,White (2.8V AC/DC)

Approvals :
RoHS,IP65



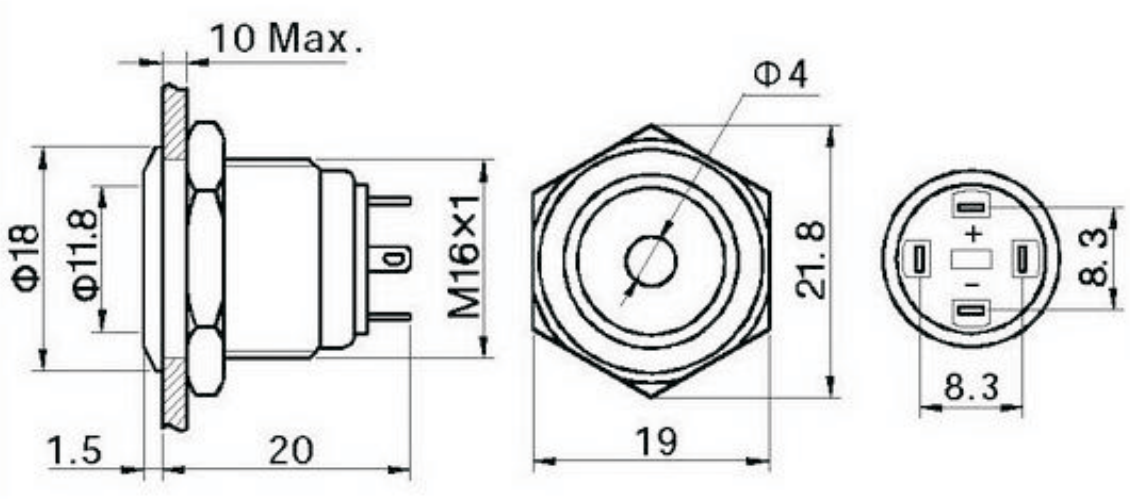

ORDER INFORMATION

LED Push Button Switches series

KLS7-LED-PB-M16-02

SPECIFICATIONS

Rating: 2A 36V DC
Mounting Hole: Ø16 mm
Insulation Resistance: 1,000MΩ Mim
Contact Resistance:50MΩ Max.
Dielectric Strength: AC 2,000V 1 Minute
Operating Temperature: -20℃ ~ +55℃
Mechanical Life: 1,000,000 cycles
Electrical Life: 20,000 cycles
Function:
1No 1Nc
Non Lock Type
LED Color : Red,Yellow,Orange (1.7V AC/DC)
Green,Blue,White (2.8V AC/DC)

Approvals :
RoHS,IP65



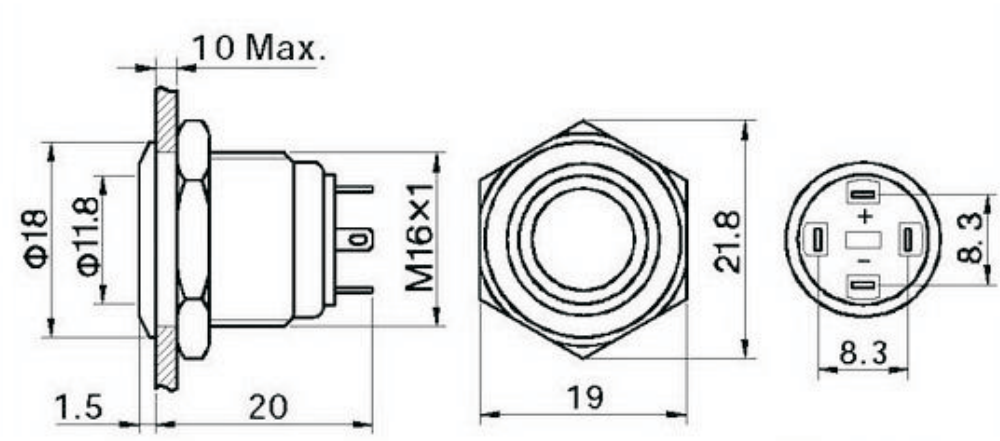

ORDER INFORMATION

LED Push Button Switches series

KLS7-LED-PB-M16-03

SPECIFICATIONS

Rating: 3A 250V DC
Mounting Hole: Ø16 mm
Insulation Resistance: 1,000MΩ Mim
Contact Resistance:50MΩ Max.
Dielectric Strength: AC 2,000V 1 Minute
Operating Temperature: -20℃ ~ +55℃
Mechanical Life: 200,000 cycles
Electrical Life: 50,000 cycles
Function:
11 = 1No 1Nc , 22 = 2No 2Nc
Z = Lock Type , □ = Non Lock Type
LED Color : Red , Green , Yellow , Orange ,Blue , White
LED Lamp : 6V,12V,24V,110V,220V AC/DC
IP67 & Ip40

Approvals : RoHS,CE,3C



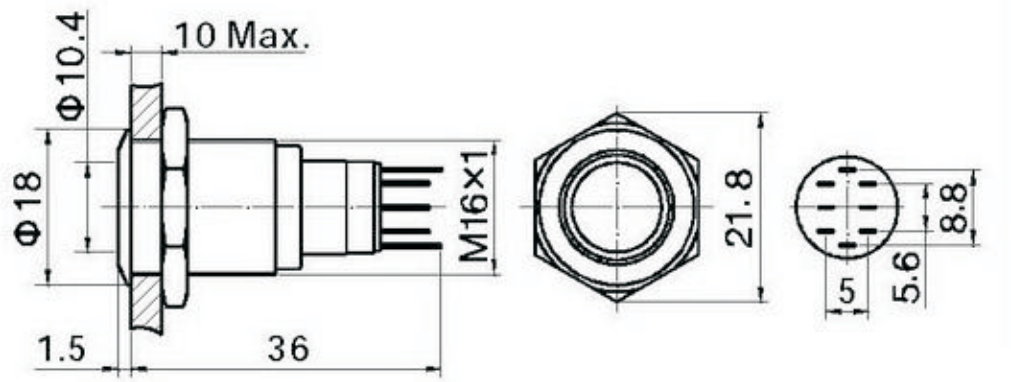

ORDER INFORMATION

LED Push Button Switches series

KLS7-LED-PB-M19-01

SPECIFICATIONS

Rating: 5A 250V AC
Mounting Hole: Ø19 mm
Insulation Resistance: 1,000MΩ Mim
Contact Resistance:50MΩ Max.
Dielectric Strength: AC 2,000V 1 Minute
Operating Temperature: -20℃ ~ +55℃
Mechanical Life: 100,000 cycles
Electrical Life: 50,000 cycles
Function:
1No 1Nc
Non Lock Type
LED Color : Red , Green , Yellow , Orange ,Blue , White
LED Lamp : 6V,12V,24V,110V,220V AC/DC

Approvals : RoHS,CE,3C,IP65



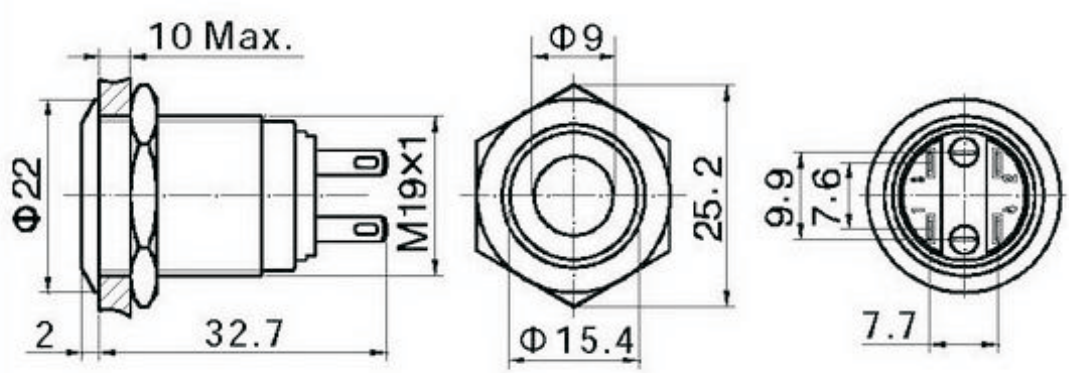

ORDER INFORMATION

DIP Switch Series

KLS7-LED-PB-M19-02

SPECIFICATIONS

Rating: 5A 250V AC
Mounting Hole: Ø19 mm
Insulation Resistance: 1,000MΩ Mim
Contact Resistance:50MΩ Max.
Dielectric Strength: AC 2,000V 1 Minute
Operating Temperature: -20℃ ~ +55℃
Mechanical Life: 100,000 cycles
Electrical Life: 50,000 cycles
Function:
1No 1Nc
Non Lock Type
LED Color : Red , Green , Yellow , Orange ,Blue , White
LED Lamp : 6V,12V,24V,110V,220V AC/DC

Approvals : RoHS,CE,3C,IP65



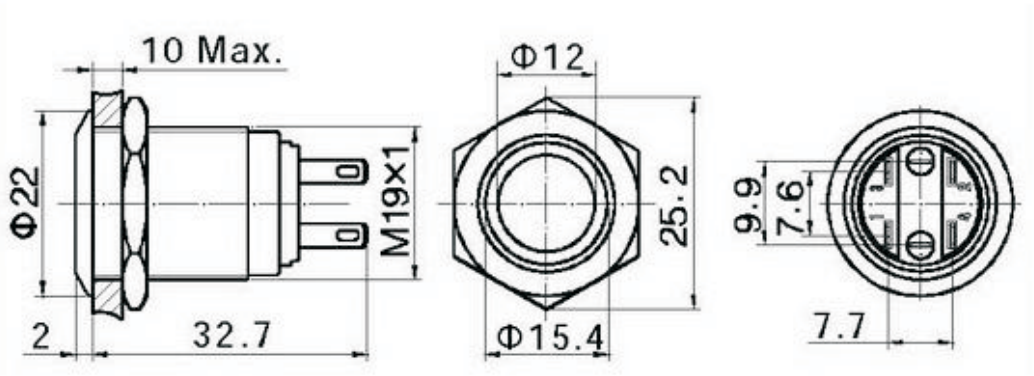

ORDER INFORMATION

LED Push Button Switches series

KLS7-LED-PB-M19-03

SPECIFICATIONS

Rating: 5A 250V AC
Mounting Hole: Ø19 mm
Insulation Resistance: 1,000MΩ Mim
Contact Resistance:50MΩ Max.
Dielectric Strength: AC 2,000V 1 Minute
Operating Temperature: -20℃ ~ +55℃
Mechanical Life: 100,000 cycles
Electrical Life: 50,000 cycles
Function:
11 = 1No 1Nc , 22 = 2No 2Nc
Z = Lock Type , □ = Non Lock Type
LED Color : Red , Green , Yellow , Orange ,Blue , White
LED Lamp : 6V,12V,24V,110V,220V AC/DC

Approvals : RoHS,CE,3C,IP67



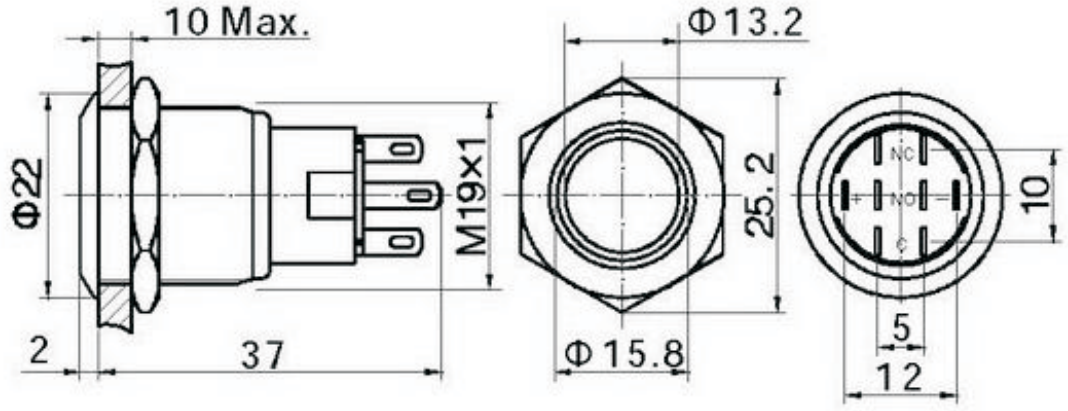

ORDER INFORMATION

Rocker Switch Series

KLS7-016 Rocker Switch Series



MATERIAL

1. Housing: Nylon 66
2.Rocker: PC & PA66
3.Contacts: Silver Alloy
4.Terminal: Brass Silver Plated
5.Lamp: Neon Lamp,Tungsten Lamp
6.Spring: SWP,SUS
7.Movable Arm: Brass Silver Plated

ELECTRICAL

1.Electrical Rating:(G): 6(2)A 250VAC T125/55 1E4
10A 125VAC
(H):10(4)A 250VAC T125/55 1E4
10(2)A 250VAC T85/55 5E4
16A 125V/10A 250VAC 1/3HP 125-250VA
2.Mechanical life:Over 30000 Cycles
3.Electrical life: Over 10000 Cycles
4.Contact Resistance:<20mΩ
5.Insulation Resistance:>1000MΩ
6.High Voltage Resistance:>1500V 1 min
7.Ambient Temperature: Terminal Side -20°C~+85°C; Actuating Side -20°C~+55°C
8.Storage Temperature: -30°C~+80°C Max
9.Atmospheric Humidity: Max 85%
10.Actuating force: 4~8N(depends on different switch function)
11.Flammability: UL94 V-2
12.Temperature rise at the terminal: Max 30°C (UI1054)
13.Solder ability of terminal: Max 350°C 3S

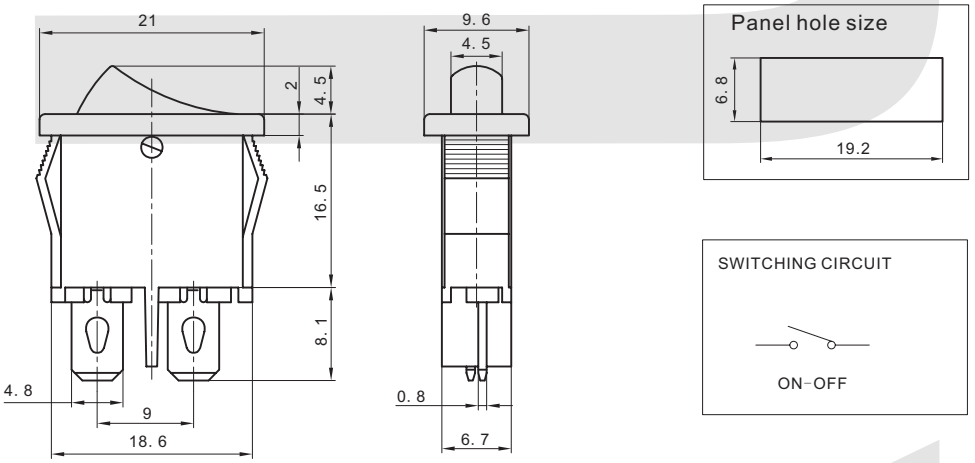

ORDER INFORMATION

KLS7-016-11-G-2 BK/BK -P8

Series No.

Function	Rating	Cap Printing	Color Cap/Housing	Terminal
11:ON-OFF 2P	G:10A 250VAC 6A 250VAC H:16A 125VAC 10A 250VAC	0: None 1: 2: 3:	BK:Black WT:White RE:Red GE:Grey	P4 P8

Rocker Switch Series

KLS7-025 Small Rocker Switch Series

MATERIAL

1. Housing: Nylon 66
2.Rocker: PC & PA66
3.Contacts: Silver Alloy
4.Terminal: Brass Silver Plated
5.Lamp: Neon Lamp,Tungsten Lamp
6.Spring: SWP,SUS
7.Movable Arm: Brass Silver Plated



ELECTRICAL

1.Electrical Rating: 3A 125VAC
1A 250VAC
2.Mechanical life:Over 30000 Cycles
3.Electrical life: Over 10000 Cycles
4.Contact Resistance:≤20mΩ
5.Insulation Resistance:1000MΩ Min
6.High Voltage Resistance:>1500V 1 min
7.Ambient Temperature: Terminal Side -20°C~+85°C;
Actuating Side -20°C~+55°C
8.Storage Temperature: -30°C~+80°C Max
9.Atmospheric Humidity: Max 85%
10.Actuating force: 4~8N(depends on different switch function)
11.Flammability: UL94 V-2
12.Temperature rise at the terminal: Max 30°C (UI1054)
13.Solder ability of terminal: Max 350°C 3S

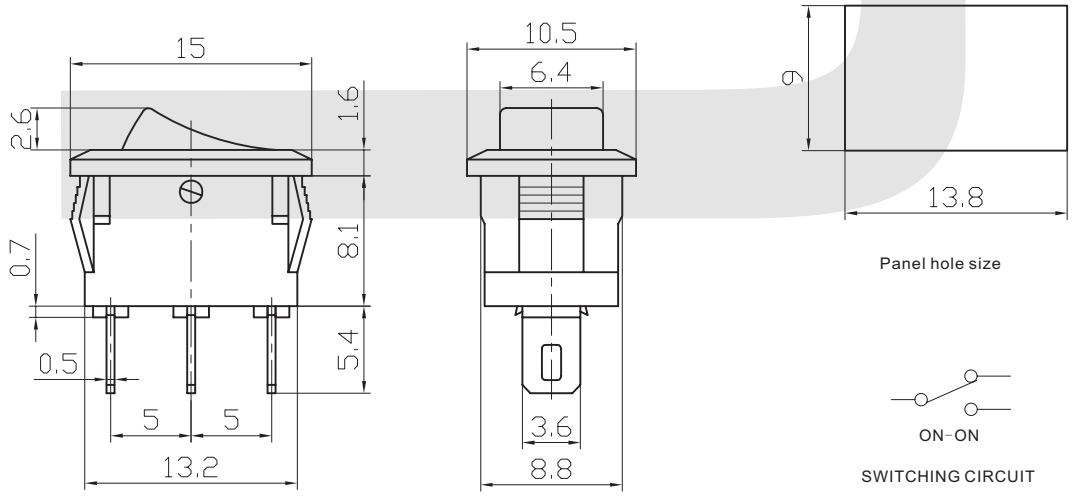

ORDER INFORMATION

KLS7-025- 1 01 1 1 B B

Series No.

Poles	Function	Marking	Terminal	Actuator color	Base color
1:Single Pole	01:ON-OFF 02:ON-ON	0 1 2 3 4 5 6	1: 0. 5x3.6 2: 0. 5x2.5 3: 0. 5x1.2	B:Black R:Red W:White	B:Black W:White R:Red

Rocker Switch Series

KLS7-001 Rocker Switch Series



MATERIAL

1. Housing: Nylon 66
2. Rocker: PC & PA66
3. Contacts: Silver Alloy
4. Terminal: Brass Silver Plated
5. Lamp: Neon Lamp,Tungsten Lamp
6. Spring: SWP,SUS
7. Movable Arm: Brass Silver Plated

ELECTRICAL

1. Electrical Rating: 10(4)A 250VAC T85
   16(4)A 250VAC T125/55 1E4
   15A 125V/7.5A 250AC
2. Mechanical life: Over 30000 Cycles
3. Electrical life: Over 10000 Cycles
4. Contact Resistance: <20mΩ
5. Insulation Resistance: >1000MΩ
6. High Voltage Resistance: >1500V 1 min
7. Ambient Temperature: Terminal Side -20°C~+85°C; Actuating Side -20°C~+55°C
8. Storage Temperature: -30°C~+80°C Max
9. Atmospheric Humidity: Max 85%
10. Actuating force: 4~8N(depends on different switch function)
11. Flammability: UL94 V-2
12. Temperature rise at the terminal: Max 30°C (UI1054)
13. Solder ability of terminal: Max 350°C 3S

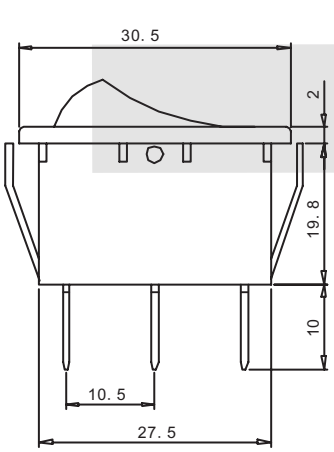

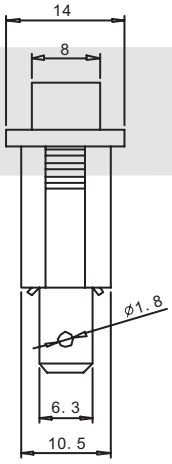

Cap Type

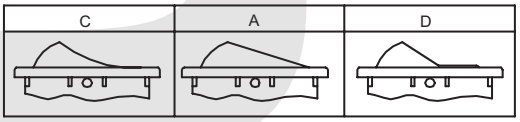

Panel hole size

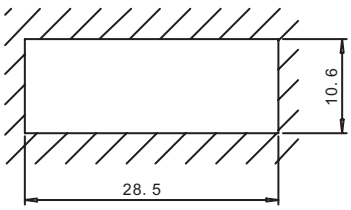

ORDER INFORMATION

KLS7-001-11/N-C-2 RE/BK -P1.....(2)

Series No.

Function	Cap Type	Cap Printing	Color Cap/Housing	Terminal	Votoge
11/N:ON-OFF 3P w/lamp 11:ON-OFF 2P 12:ON-ON 3P	A:Flast C:SoftLine D:W/Round Len	0: None 1: 2: 3: 4: 5: 8:	BK:Black WT:White RE:Red OR:Orange GR:Green BL:Blue GE:Grey	P1 P2 P4 P14 P20	1:110VAC 2:220VAC 3:12VDC 4:24VDC

Rocker Switch Series

KLS7-003 Rocker Switch Series



MATERIAL

1. Housing: Nylon 66
2.Rocker: PC & PA66
3.Contacts: Silver Alloy
4.Terminal: Brass Silver Plated
5.Lamp: Neon Lamp,Tungsten Lamp
6.Spring: SWP,SUS
7.Movable Arm: Brass Silver Plated

ELECTRICAL

1.Electrical Rating:10(4)A 250VAC T85
16(4)A 250VAC T125/55 1E4
15A 125V/7.5A 250AC
(H)Rating:16(8)A 250VAC T85/55 1E4
2.Mechanical life:Over 30000 Cycles
3.Electrical life: Over 10000 Cycles
4.Contact Resistance:<20mΩ
5.Insulation Resistance:>1000MΩ
6.High Voltage Resistance:>1500V 1 min
7.Ambient Temperature: Terminal Side -20°C~+85°C; Actuating Side -20°C~+55°C
8.Storage Temperature: -30°C~+80°C Max
9.Atmospheric Humidity: Max 85%
10.Actuating force: 4~8N(depends on different switch function)
11.Flammability: UL94 V-2
12.Temperature rise at the terminal: Max 30°C (UI1054)
13.Solder ability of terminal: Max 350°C 3S

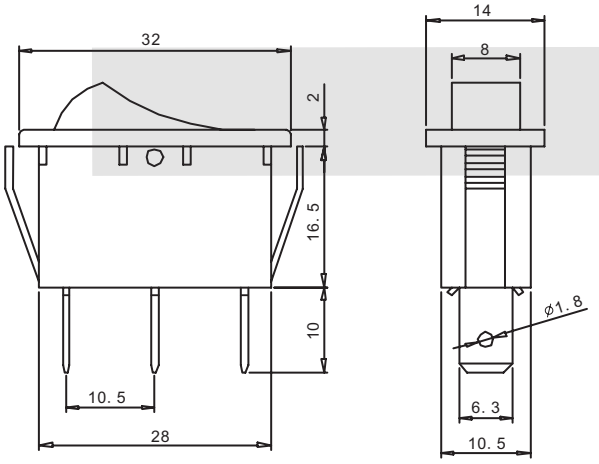

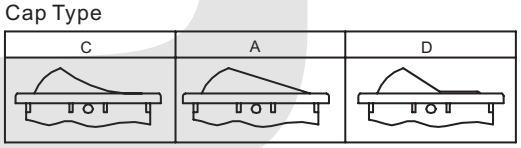

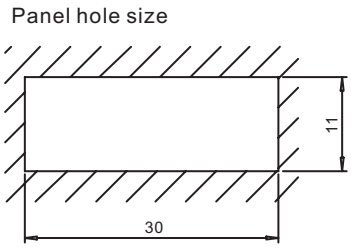

ORDER INFORMATION

KLS7-003-11/N-C-2 RE/BK -P1.....(2)

Series No.

Function	Cap Type	Cap Printing	Color Cap/Housing	Terminal	Votoge
11/N:ON-OFF 3P w/lamp 11:ON-OFF 2P 12:ON-ON 3P 13:ON-OFF-ON 3P 00:Indicator Lamp 11(ON):(ON)-OFF 2P 12(ON):(ON)-ON 3P	A:Flast C:SoftLine D:W/Round Len	0: None 1: 2: 3: 4: 5: 8: 7: 6: 18:	BK:Black WT:White RE:Red OR:Orange GR:Green BL:Blue GE:Grey	P1 P2 P4 P14 P20	1:110VAC 2:220VAC 3:12VDC 4:24VDC

Rocker Switch Series

KLS7-013 Rocker Switch Series



MATERIAL

1. Housing: Nylon 66
2.Rocker: PC & PA66
3.Contacts: Silver Alloy
4.Terminal: Brass Silver Plated
5.Lamp: Neon Lamp,Tungsten Lamp
6.Spring: SWP,SUS
7.Movable Arm: Brass Silver Plated

ELECTRICAL

1.Electrical Rating: 6(4)A 250VAC /10A 125V0AC
2.Mechanical life:Over 30000 Cycles
3.Electrical life: Over 10000 Cycles
4.Contact Resistance:≤50mΩ
5.Insulation Resistance:≥100MΩ
6.High Voltage Resistance:>1500V 1 min
7.Ambient Temperature: Terminal Side -20ºC~+85ºC;
Actuating Side -20ºC~+55ºC
8.Storage Temperature: -30ºC~+80ºC Max
9.Atmospheric Humidity: Max 85%
10.Actuating force: 4~8N(depends on different switch function)
11.Flammability: UL94 V-2
12.Temperature rise at the terminal: Max 30ºC (UI1054)
13.Solder ability of terminal: Max 350ºC 3S

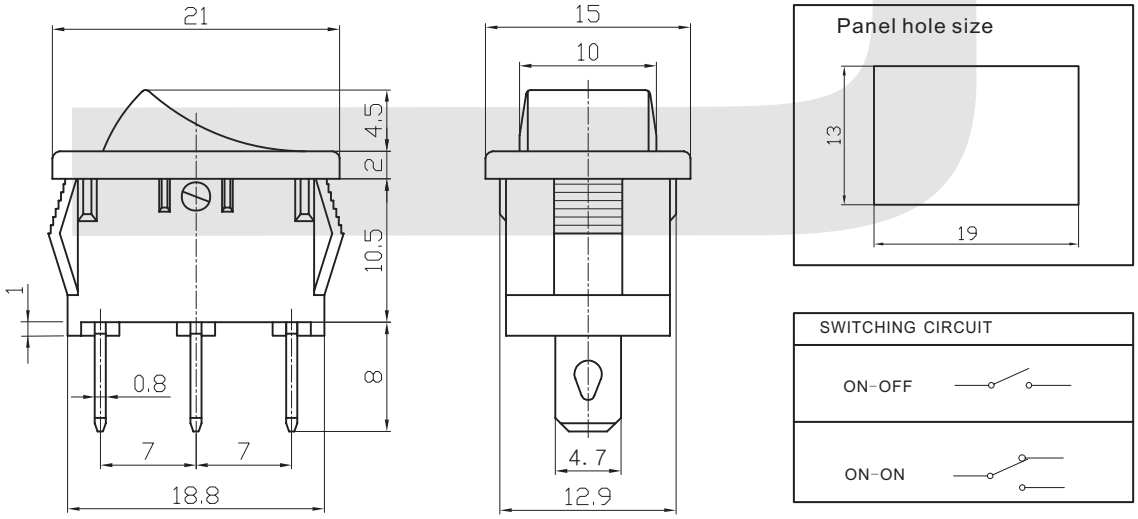

ORDER INFORMATION

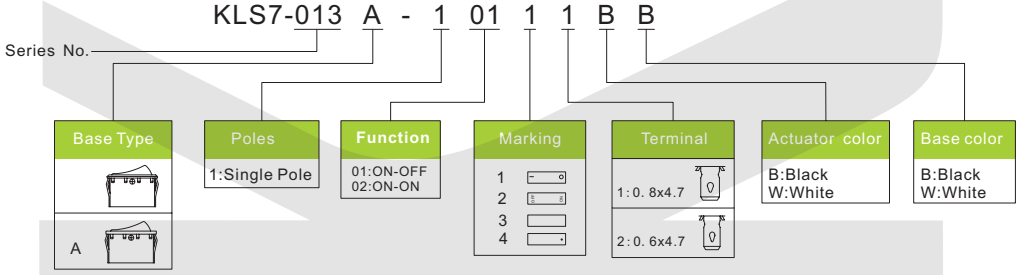

Rocker Switch Series

KLS7-015 Rocker Switch Series

MATERIAL

1. Housing: Nylon 66
2.Rocker: PC & PA66
3.Contacts: Silver Alloy
4.Terminal: Brass Silver Plated
5.Lamp: Neon Lamp,Tungsten Lamp
6.Spring: SWP,SUS
7.Movable Arm: Brass Silver Plated



ELECTRICAL

1.Electrical Rating: 6(4)A 250VAC /10A 125VAC
2.Mechanical life:Over 30000 Cycles
3.Electrical life: Over 10000 Cycles
4.Contact Resistance:≤50mΩ
5.Insulation Resistance:≥100MΩ
6.High Voltage Resistance:>1500V 1 min
7.Ambient Temperature: Terminal Side -20°C~+85°C;
Actuating Side -20°C~+55°C
8.Storage Temperature: -30°C~+80°C Max
9.Atmospheric Humidity: Max 85%
10.Actuating force: 4~8N(depends on different switch function)
11.Flammability: UL94 V-2
12.Temperature rise at the terminal: Max 30°C (UI1054)
13.Solder ability of terminal: Max 350°C 3S

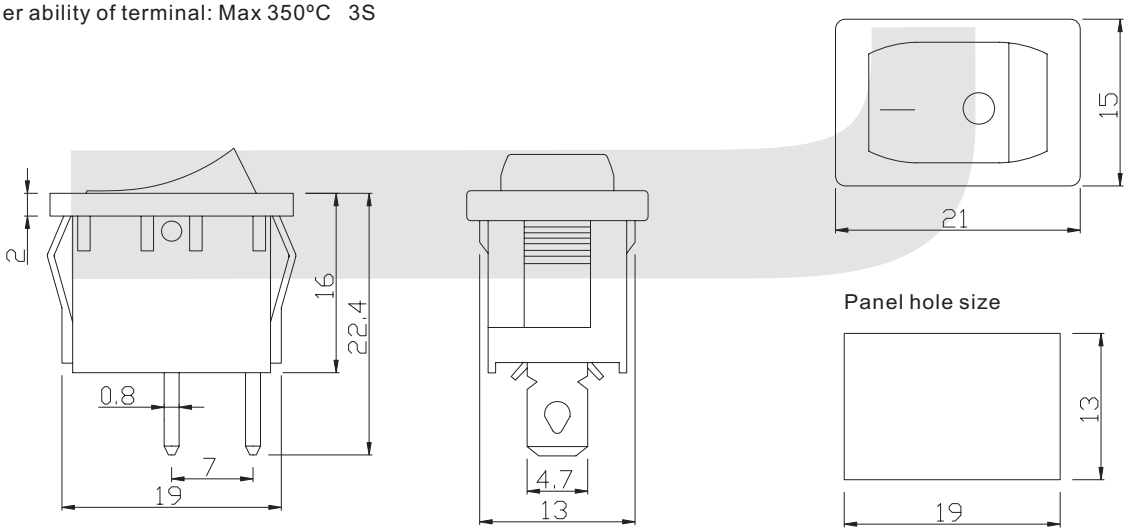

ORDER INFORMATION

KLS7-015- 1 01 N 1 1 B B

Series No.

Poles	Function	Lamp	Marking	Terminal	Actuator color	Base color
1:Single Pole	01:ON-OFF 02:ON-ON 03:ON-OFF-ON	0:Lamp Not N:220V Neon Lamp	1 2 3 4	1: 0. 8x4.7 2: 0. 6x4.7	B:Black R:Red G:Green	B:Black W:White G:Grey

Rocker Switch Series

KLS7-024 Rocker Switch Series

MATERIAL

1. Housing: Nylon 66
2.Rocker: PC & PA66
3.Contacts: Silver Alloy
4.Terminal: Brass Silver Plated
5.Lamp: Neon Lamp,Tungsten Lamp
6.Spring: SWP,SUS
7.Movable Arm: Brass Silver Plated



ELECTRICAL

1.Electrical Rating: 6A 250VAC 5E4 T85
8A 250VAC 1E4 T85
10A 125VAC 6E3 T125
10(4)A 250VAC 1E4 T125
2.Mechanical life:Over 30000 Cycles
3.Electrical life: Over 50000 Cycles
4.Contact Resistance:≤50mΩ
5.Insulation Resistance:500VDC,500MΩ Min
6.High Voltage Resistance:>1500V 1 min
7.Ambient Temperature: Terminal Side -20°C~+85°C;
Actuating Side -20°C~+55°C
8.Storage Temperature: -30°C~+80°C Max
9.Atmospheric Humidity: Max 85%
10.Actuating force: 4~8N(depends on different switch function)
11.Flammability: UL94 V-2
12.Temperature rise at the terminal: Max 30°C (UI1054)
13.Solder ability of terminal: Max 350°C 3S

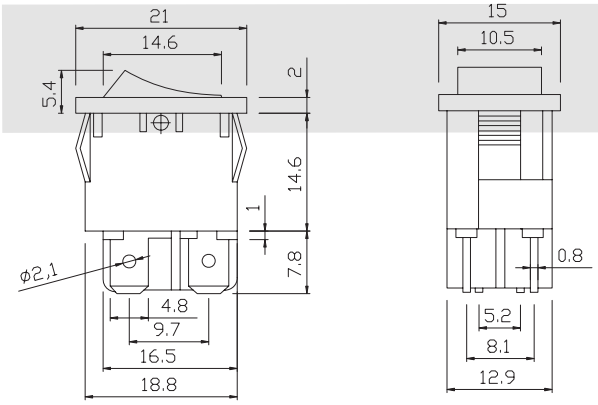

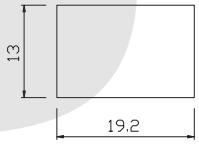

Panel hole size

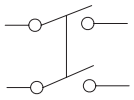

SWITCHING CIRCUIT

ORDER INFORMATION

KLS7-024- 2 01 N 1 1 B B

Series No.

Poles	Function	Lamp	Marking	Terminal	Actuator color	Base color
2:Double Pole	01:ON-OFF	0:Lamp Not N:220V Neon Lamp	0 1 2 3 4 5 6	1: 0. 8x4.8 2: 0. 8x4.8 3: 0. 8x4.8	B:Black R:Red W:White	B:Black W:White G:Grey

Rocker Switch Series

KLS7-022 Rocker Switch Series

MATERIAL

1. Housing: Nylon 66
2.Rocker: PC & PA66
3.Contacts: Silver Alloy
4.Terminal: Brass Silver Plated
5.Lamp: Neon Lamp,Tungsten Lamp
6.Spring: SWP,SUS
7.Movable Arm: Brass Silver Plated



ELECTRICAL

1.Electrical Rating: 6(4)A 250VAC /10A 125VAC
2.Mechanical life:Over 30000 Cycles
3.Electrical life: Over 10000 Cycles
4.Contact Resistance:≤50mΩ
5.Insulation Resistance:≥100MΩ
6.High Voltage Resistance:>1500V 1 min
7.Ambient Temperature: Terminal Side -20°C~+85°C;
Actuating Side -20°C~+55°C
8.Storage Temperature: -30°C~+80°C Max
9.Atmospheric Humidity: Max 85%
10.Actuating force: 4~8N(depends on different switch function)
11.Flammability: UL94 V-2
12.Temperature rise at the terminal: Max 30°C (UI1054)
13.Solder ability of terminal: Max 350°C 3S

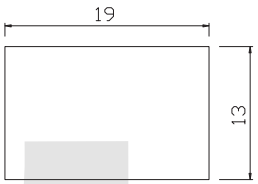

Panel hole size

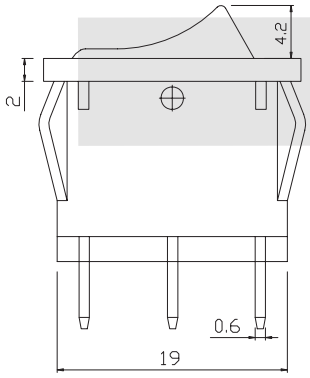

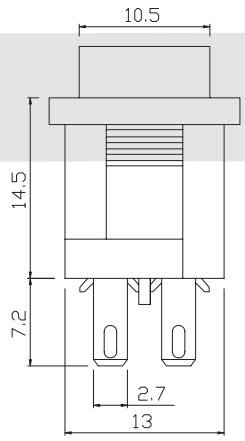

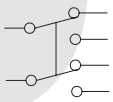

SWITCHING CIRCUIT

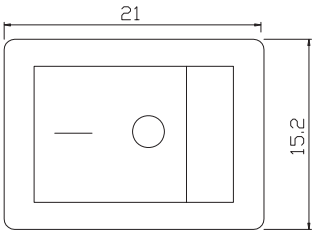

ORDER INFORMATION

KLS7-022-1 01 N 1 1 B B

Series No.

Poles	Function	Lamp	Marking	Terminal	Actuator color	Base color
1:Single Pole	01:ON-OFF 02:ON-ON	0:Lamp Not N:220V Neon Lamp	1 2 3	1:0. 6x2.7	B:Black R:Red G:Grey	B:Black W:White G:Grey

DIP Switch Series

KLS8-026

SPECIFICATIONS

Rating: 10A 125V / 6A 250V AC
Mounting Hole: 19 x 13 mm
Operation Force: 800 ± 300g
Insulation Resistance: 100 MΩ Mim. 500V DC
Contact Resistance: 20MΩ Max.
Withatand Voltage: AC 1,500 V 1 Minute
Electrical Life: 10,000 cycles
Operating Temperature: -25℃ ~ +85℃

FUNCTION:

Indicator 2P

Lamp Color: Red , Green

Approvals :

RoHS,UL,CSA,VDE



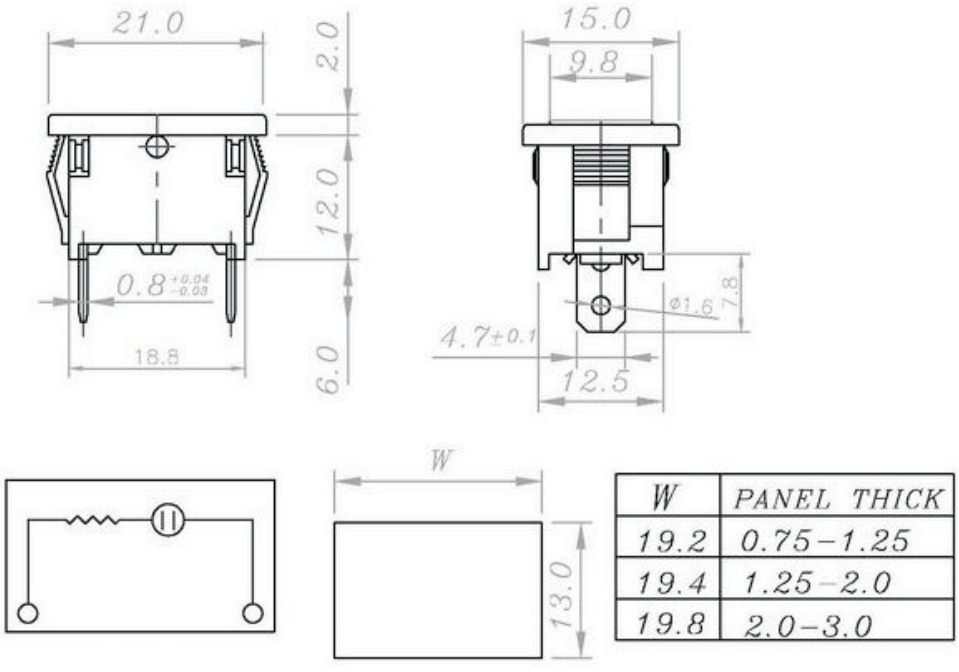

W	PANEL THICK
19.2	0.75–1.25
19.4	1.25–2.0
19.8	2.0–3.0

ORDER INFORMATION

DIP Switch Series

KLS8-027

SPECIFICATIONS

Rating: 10A 125V / 6A 250V AC
Mounting Hole: 19 x 13 mm
Operation Force: 800 ± 300g
Function: ON - OFF Right Angle Tpye
Terminal Type: #187 Terminal (4.8mm)
Insulation Resistance: 100 MΩ Mim. 500V DC
Contact Resistance: 20MΩ Max.
Withatand Voltage: AC 1,500 V 1 Minute
Electrical Life: 10,000 cycles
Operating Temperature: -25℃ ~ +85℃



Approvals :
RoHS,UL,CSA,VDE

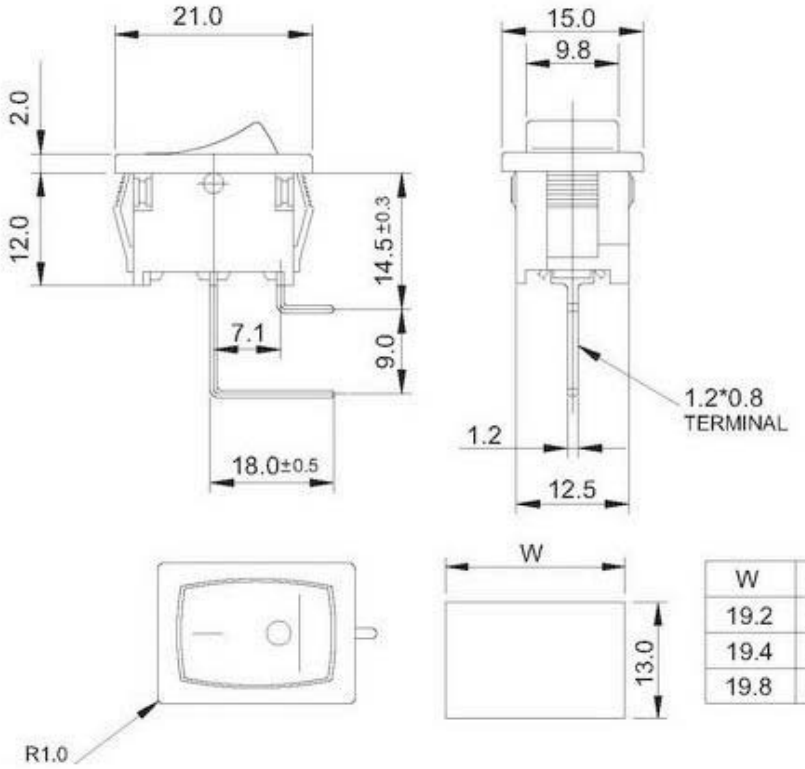

W	PANEL THICK
19.2	0.75-1.25
19.4	1.25-2.0
19.8	2.0-3.0

ORDER INFORMATION

DIP Switch Series

KLS8-028

SPECIFICATIONS

Rating: 10A 125V / 6A 250V AC
Mounting Hole: 19 x 13 mm
Operation Force: 800 ± 300g
Insulation Resistance: 100 MΩ Mim. 500V DC
Contact Resistance: 20MΩ Max.
Withatand Voltage: AC 1,500 V 1 Minute
Electrical Life: 10,000 cycles
Operating Temperature: -25℃ ~ +85℃



FUNCTION:

Right Angle Type
A = ON - OFF 2P
B = ON - ON 3P

Approvals :
RoHS,UL,CSA,VDE

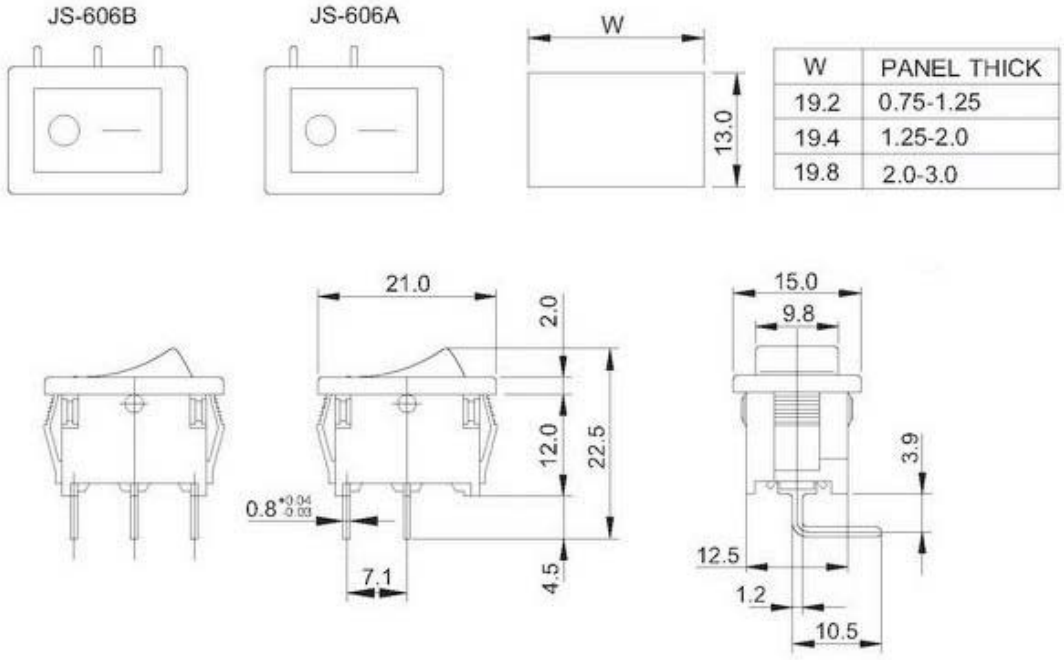

W	PANEL THICK
19.2	0.75-1.25
19.4	1.25-2.0
19.8	2.0-3.0

ORDER INFORMATION

Rocker Switch Series

KLS7-005 Rocker Switch Series

MATERIAL

1. Housing: Nylon 66
2.Rocker: PC & PA66
3.Contacts: Silver Alloy
4.Terminal: Brass Silver Plated
5.Lamp: Neon Lamp,Tungsten Lamp
6.Spring: SWP,SUS
7.Movable Arm: Brass Silver Plated



ELECTRICAL

1.Electrical Rating:10(4)A 250VAC T85
16(4)A 250VAC T125/55 1E4
15A 125V/7.5A 250AC
(H)Rating:20A 125VAC 3/4HP T105
2.Mechanical life:Over 30000 Cycles
3.Electrical life: Over 10000 Cycles
4.Contact Resistance:<20mΩ
5.Insulation Resistance:>1000MΩ
6.High Voltage Resistance:>1500V 1 min
7.Ambient Temperature: Terminal Side -20°C~+85°C; Actuating Side -20°C~+55°C
8.Storage Temperature: -30°C~+80°C Max
9.Atmospheric Humidity: Max 85%
10.Actuating force: 4~8N(depends on different switch function)
11.Flammability: UL94 V-2
12.Temperature rise at the terminal: Max 30°C (UI1054)
13.Solder ability of terminal: Max 350°C 3S

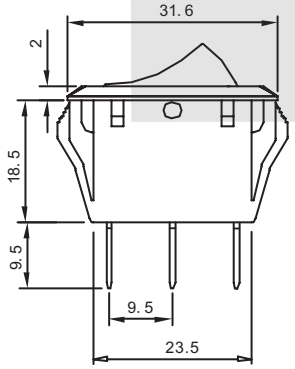

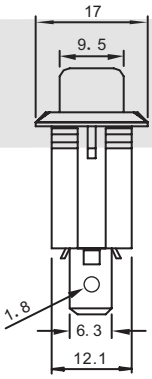

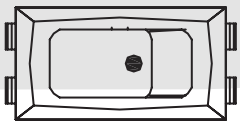

SWITCHING CIRCUIT

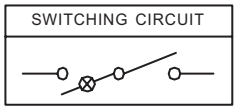

Cap Type

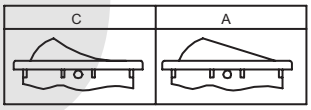

Panel hole size

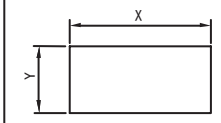

S:X*Y=27.2*12.2
G:X*Y=28.6*14

ORDER INFORMATION

KLS7-005-11/N-C-2 RE/BK -P1 -S .....(2)

Series No.

Function
11/N:ON-OFF 3P w/lamp
11:ON-OFF 2P
12:ON-ON 3P
13:ON-OFF-ON 3P
11(ON):(ON)-OFF 2P
11(OFF):ON-(OFF) 2P
12(ON):(ON)-ON 3P
13(ON):(ON)-OFF-ON 3P

Cap Type
A:Flast
C:Soft Line

16:
7:
6:
38:

Cap Printing
0: None
1:
2:
3:
4:
5:
8:

Color Cap/Housing
BK:Black
WT:White
RE:Red
OR:Orange
GR:Green
BL:Blue
GE:Grey

Terminal

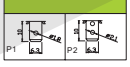

Panel hoe size
S:27.2*12.2
G:28.6*14

Votoge
1:110VAC
2:220VAC
3:12VDC
4:24VDC

Rocker Switch Series

KLS7-007 Rocker Switch Series



MATERIAL

1. Housing: Nylon 66
2. Rocker: PC & PA66
3. Contacts: Silver Alloy
4. Terminal: Brass Silver Plated
5. Lamp: Neon Lamp,Tungsten Lamp
6. Spring: SWP,SUS
7. Movable Arm: Brass Silver Plated

ELECTRICAL

1. Electrical Rating:16(4)A 250VAC T85
   16(4)A 250VAC T125/55 1E4
   16A 125V/8A 250AC
   (H)Rating:16(8)A 250VAC T85/55 1E4
2. Mechanical life:Over 30000 Cycles
3. Electrical life: Over 10000 Cycles
4. Contact Resistance:<20mΩ
5. Insulation Resistance:>1000MΩ
6. High Voltage Resistance:>1500V 1 min
7. Ambient Temperature: Terminal Side -20°C~+85°C; Actuating Side -20°C~+55°C
8. Storage Temperature: -30°C~+80°C Max
9. Atmospheric Humidity: Max 85%
10. Actuating force: 4~8N(depends on different switch function)
11. Flammability: UL94 V-2
12. Temperature rise at the terminal: Max 30°C (UI1054)
13. Solder ability of terminal: Max 350°C 3S

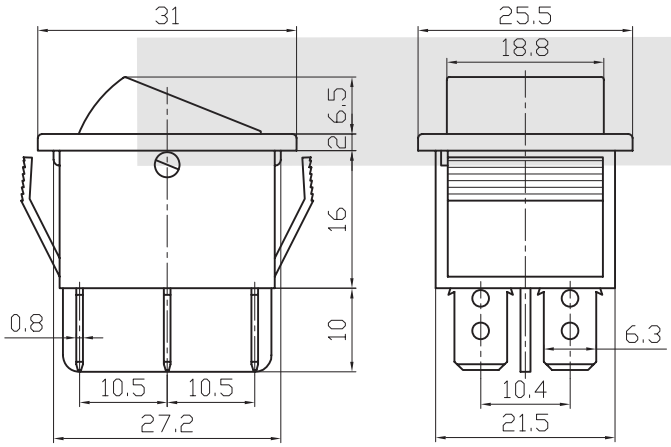

Cap Type

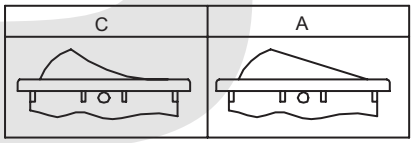

Panel hole size

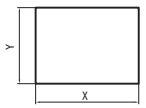

S: X*Y=28*22
G: X*Y=28. 5*22

SWITCHING CIRCUIT

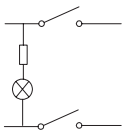

ORDER INFORMATION

KLS7-007-21/N-C-2 RE/BK -P1 -S .....(2)

Series No.

Function	Cap Type	Cap Printing	Color Cap/Housing	Terminal	Panel hoe size	Votoge
21/N:ON-OFF 4P w/lamp 21:ON-OFF 4P 22:ON-ON 6P 23:ON-OFF-ON 6P 11:ON-OFF 2P 12:ON-ON 3P	A:Flast C:Soft Line P:W/PVC-Cap	0: None 1: 2: 3: 4: 5: 8: 7: 6:	BK:Black WT:White RE:Red OR:Orange GR:Green BL:Blue GE:Grey	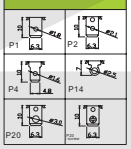	S:28*22 G:28.5*22	1:110VAC 2:220VAC 3:12VDC 4:24VDC

Rocker Switch Series

KLS7-009 Rocker Switch Series

MATERIAL

1. Housing: Nylon 66
2.Rocker: PC & PA66
3.Contacts: Silver Alloy
4.Terminal: Brass Silver Plated
5.Lamp: Neon Lamp,Tungsten Lamp
6.Spring: SWP,SUS
7.Movable Arm: Brass Silver Plated



ELECTRICAL

1.Electrical Rating:16(4)A 250VAC T85
16(4)A 250VAC T125/55 1E4
16A 125V/8A 250AC
(H)Rating:16(8)A 250VAC T85/55 1E4
2.Mechanical life:Over 30000 Cycles
3.Electrical life: Over 10000 Cycles
4.Contact Resistance:<20mΩ
5.Insulation Resistance:>1000MΩ
6.High Voltage Resistance:>1500V 1 min
7.Ambient Temperature: Terminal Side -20°C~+85°C; Actuating Side -20°C~+55°C
8.Storage Temperature: -30°C~+80°C Max
9.Atmospheric Humidity: Max 85%
10.Actuating force: 4~8N(depends on different switch function)
11.Flammability: UL94 V-2
12.Temperature rise at the terminal: Max 30°C (UI1054)
13.Solder ability of terminal: Max 350°C 3S

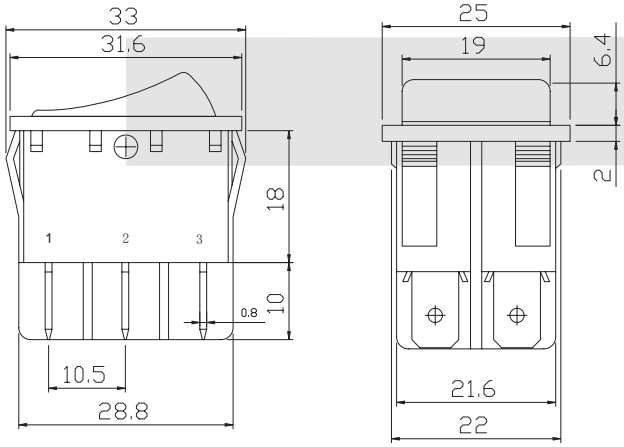

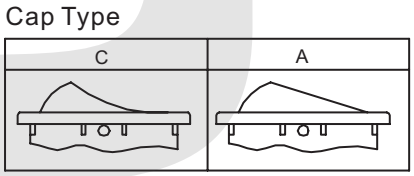

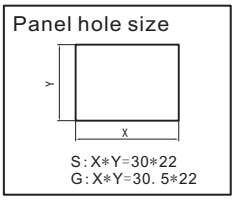

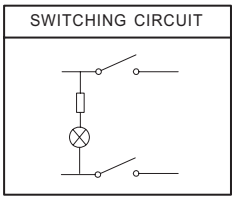

ORDER INFORMATION

KLS7-009-21/N-C-2 RE/BK -P1 -S .....(2)

Series No.

Function
00:Indicator Lamp
21/N:ON-OFF 4P w/lamp
21:ON-OFF 4P
22:ON-ON 6P
23:ON-OFF-ON 6P
11:ON-OFF 2P
12:ON-ON 3P
13:ON-OFF-ON 3P
21(ON):(ON)-OFF 4P
23(ON):(ON)-OFF-ON 6P
23(2xON):(ON)-OFF-(ON) 6P

Cap Type
A:Flast
C:Soft Line
P:W/PVC-Cap

28:
7:
6:

Cap Printing
0: None
1:
2:
3:
4:
5:
8:

Color Cap/Housing
BK:Black
WT:White
RE:Red
OR:Orange
GR:Green
BL:Blue
GE:Grey

Terminal

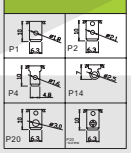

Panel hoe size
S:30*22
G:30.5*22

Votoge
1:110VAC
2:220VAC
3:12VDC
4:24VDC

Rocker Switch Series

KLS7-010 Rocker Switch Series

MATERIAL

1. Housing: Nylon 66
2.Rocker: PC & PA66
3.Contacts: Silver Alloy
4.Terminal: Brass Silver Plated
5.Lamp: Neon Lamp,Tungsten Lamp
6.Spring: SWP,SUS
7.Movable Arm: Brass Silver Plated



ELECTRICAL

1.Electrical Rating:16(4)A 250VAC T85
16(4)A 250VAC T125/55 1E4
16A 125V/8A 250AC
2.Mechanical life:Over 30000 Cycles
3.Electrical life: Over 10000 Cycles
4.Contact Resistance:<20mΩ
5.Insulation Resistance:>1000MΩ
6.High Voltage Resistance:>1500V 1 min
7.Ambient Temperature: Terminal Side -20ºC~+85ºC; Actuating Side -20ºC~+55ºC
8.Storage Temperature: -30ºC~+80ºC Max
9.Atmospheric Humidity: Max 85%
10.Actuating force: 4~8N(depends on different switch function)
11.Flammability: UL94 V-2
12.Temperature rise at the terminal: Max 30ºC (UI1054)
13.Solder ability of terminal: Max 350ºC 3S

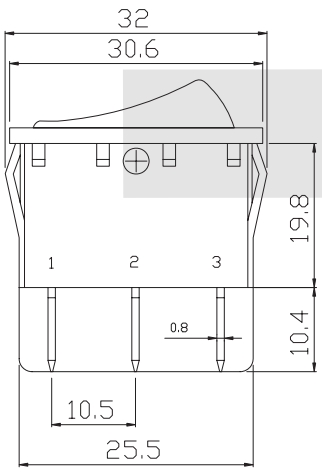

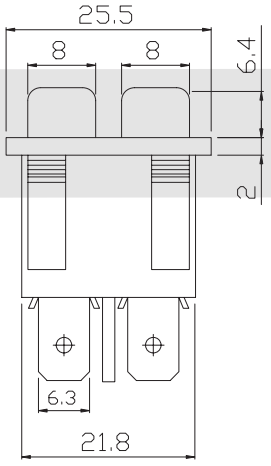

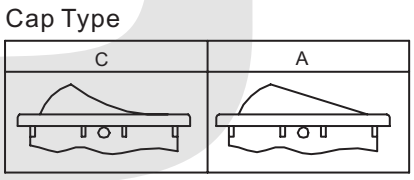

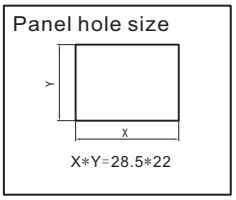

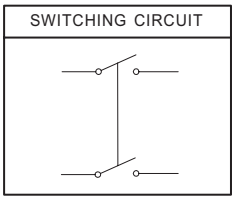

ORDER INFORMATION

KLS7-010-21/N-C-30 RE/BK -P1 .....(2)

Series No.

Function	Cap Type	Cap Printing	Color Cap/Housing	Terminal	Votoge
00:Indicator Lamp 21/N:ON-OFF 4P w/lamp 21:ON-OFF 4P 22:ON-ON 6P 23:ON-OFF-ON 6P 11:ON-OFF 2P 12:ON-ON 3P 13:ON-OFF-ON 3P 21(ON):(ON)-OFF 4P 23(ON):(ON)-OFF-ON 6P 23(2xON):(ON)-OFF-(ON) 6P	A:Flast C:Soft Line P:W/PVC-Cap	0: None 11: 12: 30: 13:	BK:Black WT:White RE:Red OR:Orange GR:Green	P1 P2 P4 P14	1:110VAC 2:220VAC 3:12VDC 4:24VDC

DIP Switch Series

KLS8-029

SPECIFICATIONS

Rating: 15A 125V / 10A 250V AC
Mounting Hole: 25. 7 x 25. 4 mm
Operation Force: 700 ± 200g
Function: ON - OFF with Lamp
Terminal Type: #187 Terminal (4.8mm)
Insulation Resistance: 500 MΩ Mim. 500V DC
Contact Resistance: 20MΩ Max.
Withatand Voltage: AC 2,000 V 1 Minute
Electrical Life: 10,000 cycles

Approvals :
RoHS,UL,CSA



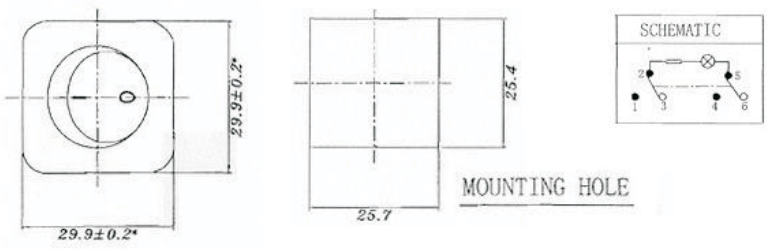

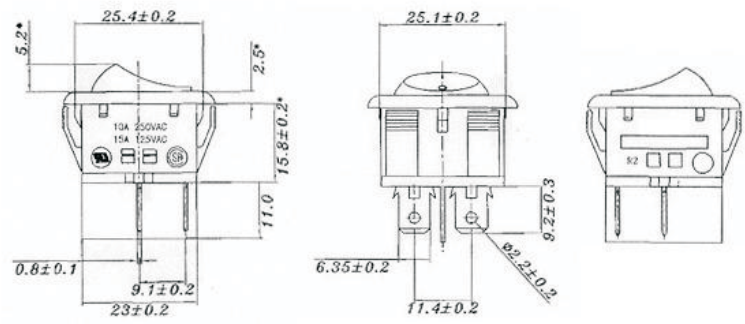



ORDER INFORMATION

Rocker Switch Series

KLS7-023 Rocker Switch Series



MATERIAL

1. Housing: Nylon 66
2.Rocker: PC & PA66
3.Contacts: Silver Alloy
4.Terminal: Brass Silver Plated
5.Lamp: Neon Lamp,Tungsten Lamp
6.Spring: SWP,SUS
7.Movable Arm: Brass Silver Plated

ELECTRICAL

1.Electrical Rating: 6(4)A 250VAC /10A 125VAC
2.Mechanical life:Over 30000 Cycles
3.Electrical life: Over 10000 Cycles
4.Contact Resistance:≤50mΩ
5.Insulation Resistance:≥100MΩ
6.High Voltage Resistance:>1500V 1 min
7.Ambient Temperature: Terminal Side -20°C~+85°C;
Actuating Side -20°C~+55°C
8.Storage Temperature: -30°C~+80°C Max
9.Atmospheric Humidity: Max 85%
10.Actuating force: 4~8N(depends on different switch function)
11.Flammability: UL94 V-2
12.Temperature rise at the terminal: Max 30°C (UI1054)
13.Solder ability of terminal: Max 350°C 3S

Panel hole size

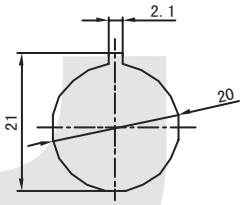

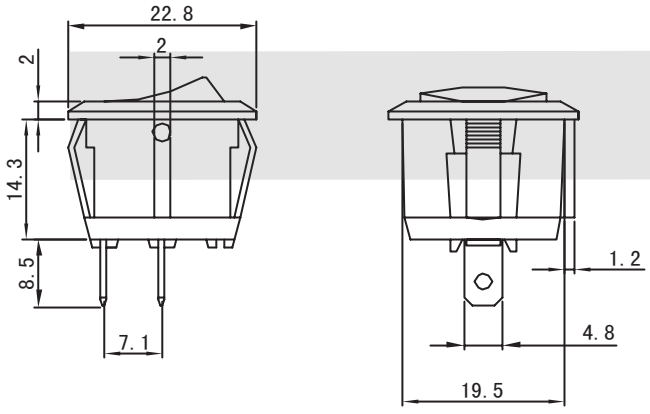

SWITCHING CIRCUIT

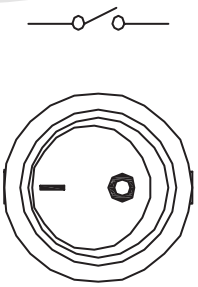

ORDER INFORMATION

KLS7-023- 1 01 N 1 1 B B

Series No.

Poles	Function	Lamp	Marking	Terminal	Actuator color	Base color
1:Single Pole	01:ON-OFF 02:ON-ON 03:ON-OFF-ON	0:Lamp Not N:220V Neon Lamp	1 2 3 4	1:0. 8x4.7 2:0. 6x4.7	B:Black R:Red G:Grey	B:Black W:White G:Grey

Rocker Switch Series

KLS7-021 Rocker Switch Series

MATERIAL

1. Housing: Nylon 66
2.Rocker: PC & PA66
3.Contacts: Silver Alloy
4.Terminal: Brass Silver Plated
5.Lamp: Neon Lamp,Tungsten Lamp
6.Spring: SWP,SUS
7.Movable Arm: Brass Silver Plated



ELECTRICAL

1.Electrical Rating: 6(4)A 250VAC /10A 125VAC
2.Mechanical life:Over 30000 Cycles
3.Electrical life: Over 10000 Cycles
4.Contact Resistance:≤50mΩ
5.Insulation Resistance:≥100MΩ
6.High Voltage Resistance:>1500V 1 min
7.Ambient Temperature: Terminal Side -20°C~+85°C;
Actuating Side -20°C~+55°C
8.Storage Temperature: -30°C~+80°C Max
9.Atmospheric Humidity: Max 85%
10.Actuating force: 4~8N(depends on different switch function)
11.Flammability: UL94 V-2
12.Temperature rise at the terminal: Max 30°C (UI1054)
13.Solder ability of terminal: Max 350°C 3S

Panel hole size

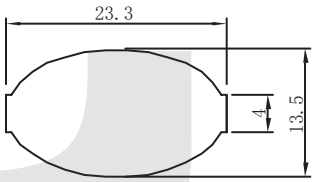

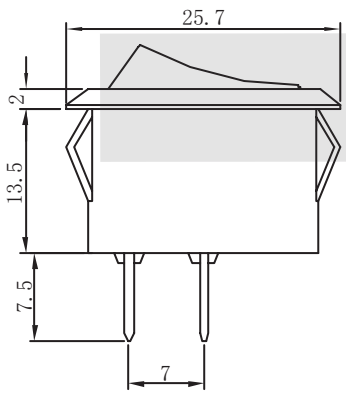

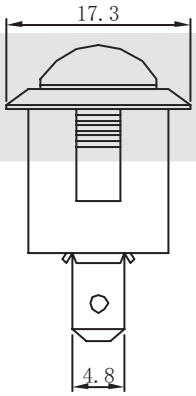

SWITCHING CIRCUIT

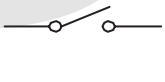

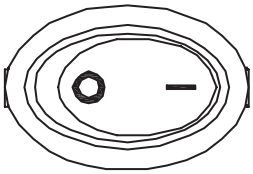

ORDER INFORMATION

KLS7-021-1 01 N 1 1 B B

Series No.

Poles	Function	Lamp	Marking	Terminal	Actuator color	Base color
1:Single Pole	01:ON-OFF 02:ON-ON 03:ON-OFF-ON	0:Lamp Not N:220V Neon Lamp	1 2 3 4	1:0.8x4.7 2:0.8x4.7	B:Black R:Red G:Grey	B:Black W:White G:Grey

Rocker Switch Series

KLS7-020 Rocker Switch Series

MATERIAL

1. Housing: Nylon 66
2.Rocker: PC & PA66
3.Contacts: Silver Alloy
4.Terminal: Brass Silver Plated
5.Lamp: Neon Lamp,Tungsten Lamp
6.Spring: SWP,SUS
7.Movable Arm: Brass Silver Plated



ELECTRICAL

1.Electrical Rating: 6(4)A 250VAC /10A 125VAC
2.Mechanical life:Over 30000 Cycles
3.Electrical life: Over 10000 Cycles
4.Contact Resistance:≤50mΩ
5.Insulation Resistance:≥100MΩ
6.High Voltage Resistance:>1500V 1 min
7.Ambient Temperature: Terminal Side -20°C~+85°C;
Actuating Side -20°C~+55°C
8.Storage Temperature: -30°C~+80°C Max
9.Atmospheric Humidity: Max 85%
10.Actuating force: 4~8N(depends on different switch function)
11.Flammability: UL94 V-2
12.Temperature rise at the terminal: Max 30°C (UI1054)
13.Solder ability of terminal: Max 350°C 3S

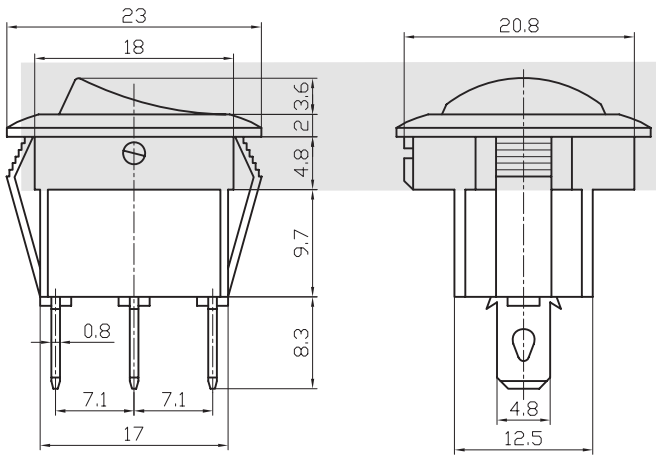

Panel hole size

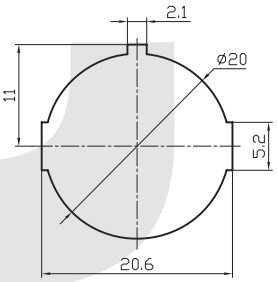

SWITCHING CIRCUIT

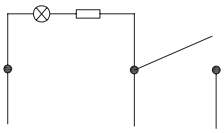

ORDER INFORMATION

KLS7-020- 1 01 N 1 1 B B

Series No.

Poles	Function	Lamp	Marking	Terminal	Actuator color	Base color
1:Single Pole	01:ON-OFF 02:ON-ON 03:ON-OFF-ON	0:Lamp Not N:220V Neon Lamp	1 2 3 4	1: 0. 8x4.7 2: 0. 6x4.7	B:Black R:Red G:Grey	B:Black W:White G:Grey

DIP Switch Series

KLS8-030

SPECIFICATIONS

Rating: 16A 125V / 10A 250V AC
Mounting Hole: 20.2 mm , Ø 18.6 mm
Insulation Resistance: 100 MΩ Mim. 500V DC
Contact Resistance:50MΩ Max.
Withatand Voltage: AC1,500 V 1 Minute



FUNCTION:
A = ON - OFF
A2=ON - OFF With LED
C = ON - ON
D = ON - OFF - ON
E = ON - (OFF)
F = (ON) - OFF
G = ON - (ON)
H = ON - OFF - (ON)
I = (ON) - OFF - (ON)

Approvals :
RoHS,CUS,ENEC10,CSA,VDE,CQC

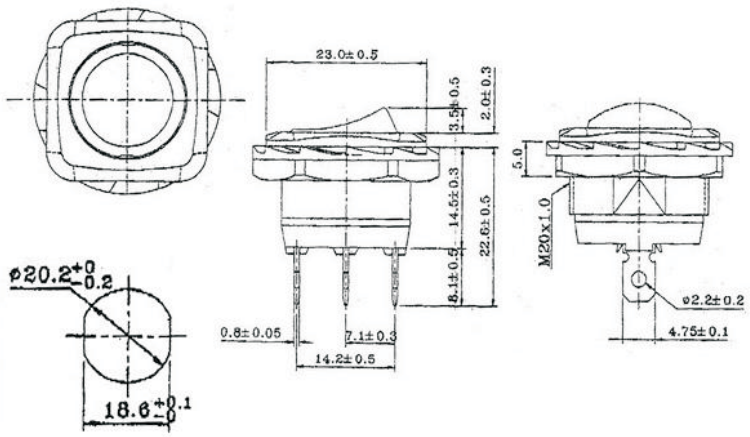



ORDER INFORMATION

Rotary switches*Coding switches series

VII

KLS7-SRA10

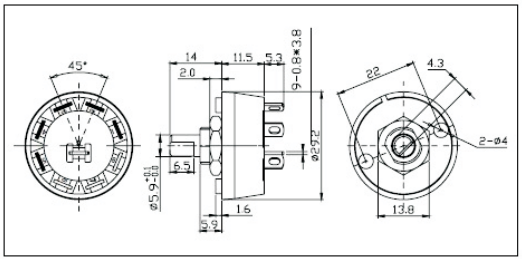

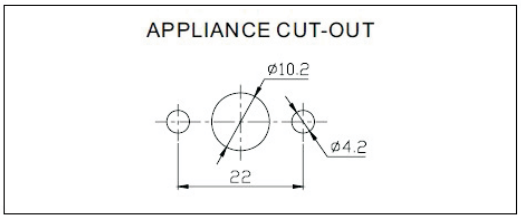



◆ PART NUMBER

A10 - 5 0 A A - 2

Series | Function | Type | Cover | Terminal | Shaft

Function(1)

Function	Version	Code
Two Switch		2
Three Switch		3
Four Switch		4
Five Switch		5
Six Switch		6
Seven Switch		7
Eight Switch		8
Nine Switch		9
Ten Switch		10

Type(2)

Type	Version	Code
Without Reset Function		0
With Reset Function		1

Cover(3)

Cover	Version	Code
Circular Bolt		A
Circular Bolt with two Plane		B
Circular Bolt withOne Plane		C

Terminal(4)

Terminal	Version	Code
Solder Terminal with Elliptic Hole		A
Solder Terminal with Quadrate Hole		B

Shaft(5)

Shaft	Version	Code
Shaft 1		1
Shaft 2		2
Shaft 5		3

Rotary switches*Coding switches series

OUTPUT CODES

PIN NO	POSITION															
	0	1	2	3	4	5	6	7	8	9	A	B	C	D	E	F
1	○	●	○	●	○	●	○	●	○	●	○	●	○	●	○	●
2	○	○	●	●	○	○	●	●	○	○	●	●	○	○	●	●
4	○	○	○	○	●	●	●	●	○	○	○	○	●	●	●	●
8	○	○	○	○	○	○	○	○	●	●	●	●	●	●	●	●

● . . . . . Real Code
Rotor color:Yellow(3:3)
○ . . . . . **Complement Code**
Rotor color:Red(3:3)

ORDER INFORMATION

Rotary switches*Coding switches series

KLS7-SR16/16mm series

SPECIFICATIONS

Temperature: -20℃-85℃
Max. reted power : 60VDC 0.30A
Contact resistance : Max. 50M Ohm
Insulation resistance :100M Ohm Min. 500VDC
Withstand voltage : 500V AC for 1 Min.
Terminal strength:5N for 1 Min.
Ratating Forque: 0.50~1.0N
Mechanical life and reated power :10000 cycles 100M Ohm Max.



Ordering information:

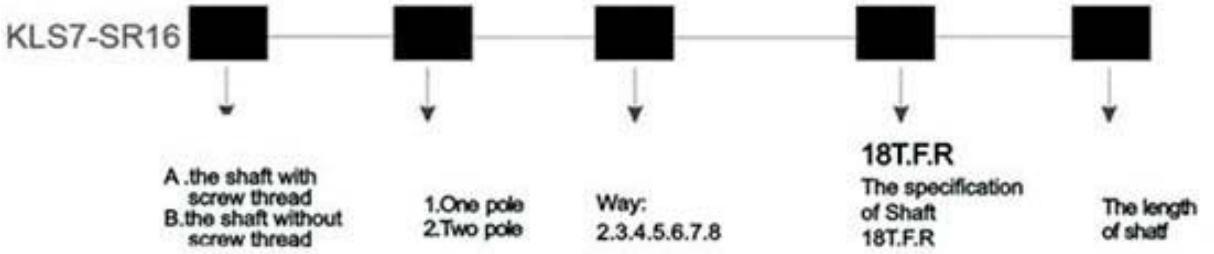

Model to choose : SR16A / SR16B

SR16A



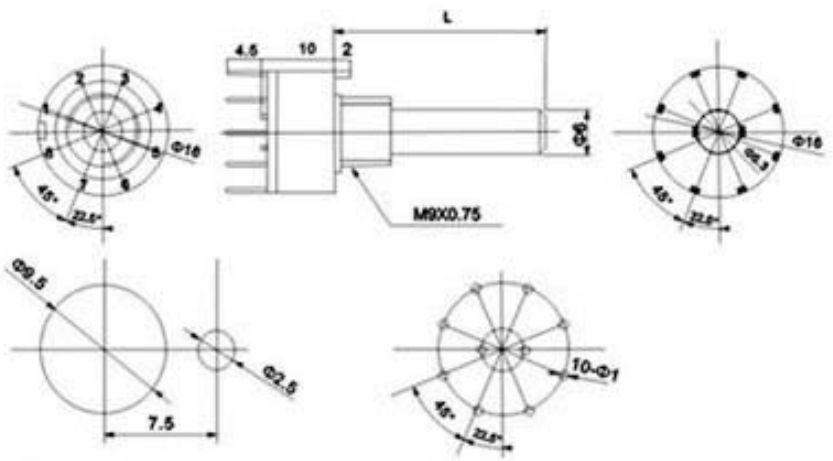

Switch

KLS electronic
www.cnkls.com

Rotary switches*Coding switches series

KLS7-SR16/16mm series

SR16B



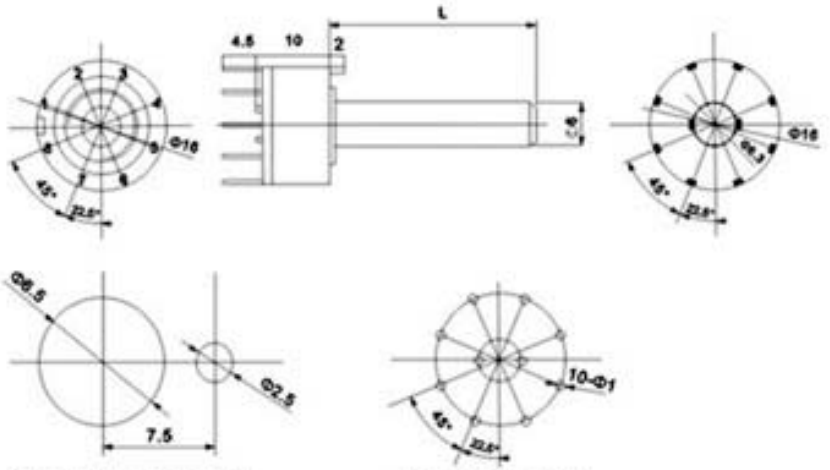

轴端无丝杆开孔尺寸图
The starter size picture of the shaft without screw thread

线路板开孔尺寸图
The starter size picture of circuit board

Shaft to choose : 18T / F / R

18T

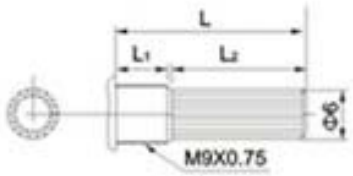

L	L1	L2
15	6.5	8.5
20	6.5	13.5
25	6.5	18.5

F

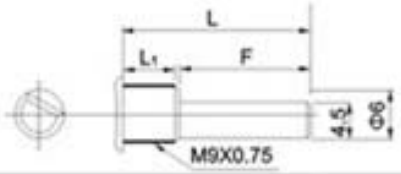

L	L1	F
15	6.5	8.5
20	6.5	13.5
25	6.5	18.5

R

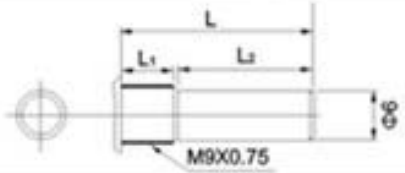

L	L1	L2
15	6.5	8.5
20	6.5	13.5
25	6.5	18.5

Rotary switches*Coding switches series

KLS7-SR26/26mm series

Appliance performance	
working Vlotage	AC 125V
Rated current	0.30A
Contact resistance	Less than 0.02 Ohm
Insulation resistance	DC 500V-100m Ohm Min
Limiting Vlotage	AC 500V 1 min.

Mechincal property	
Totation torque	0.5~2.5kgf.cm
Shatf stop strength	5kgf.cm
Mechanical endurance	More than 10000 cycles





ORDER INFORMATION

Ordering information :

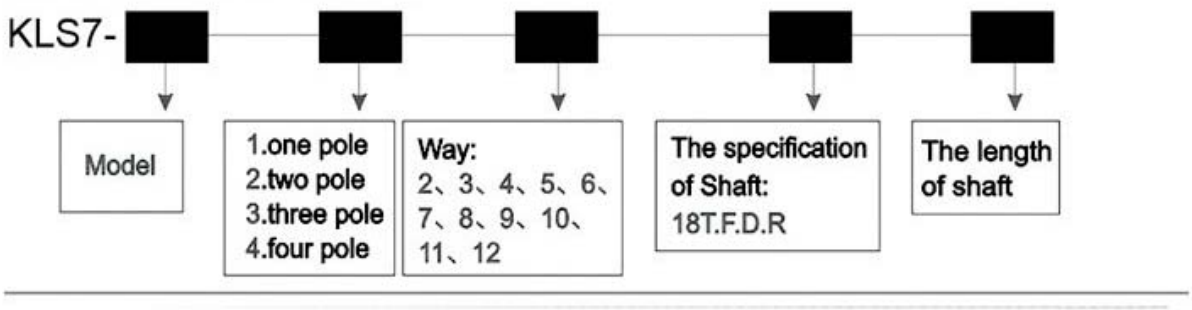

Rotary switches*Coding switches series

Model to choose : SR26A / SR26B / SR26A4 SR26B4

SR26A



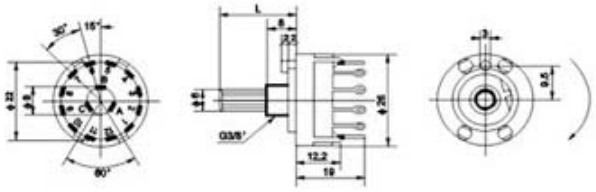

Outline Drawing

SR26B



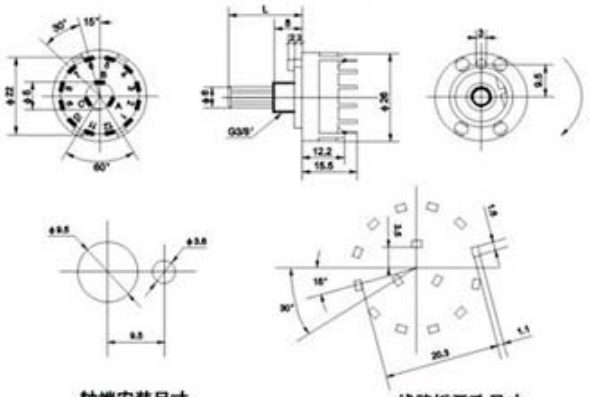

轴端安装尺寸
The fitting size of shaft end

线路板开孔尺寸
The tapping size of circuit board

SR26A4



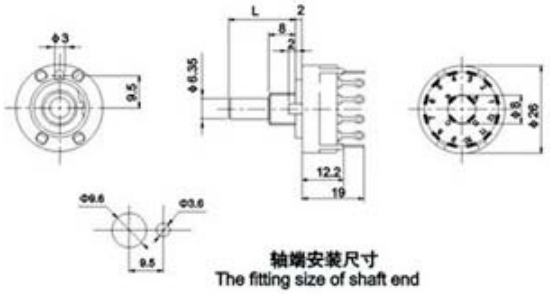

轴端安装尺寸
The fitting size of shaft end

SR26B4



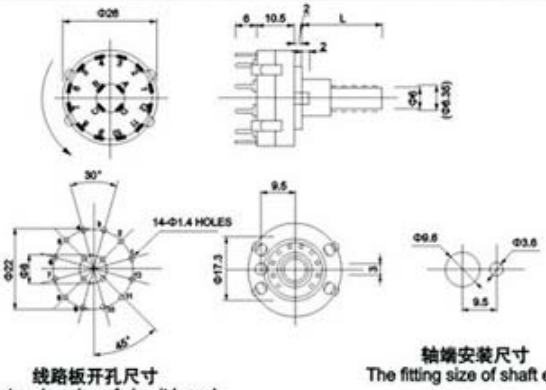

线路板开孔尺寸
The tapping size of circuit board

轴端安装尺寸
The fitting size of shaft end

Rotary switches*Coding switches series

Shaft to choose : 18T / F / D / R

18T

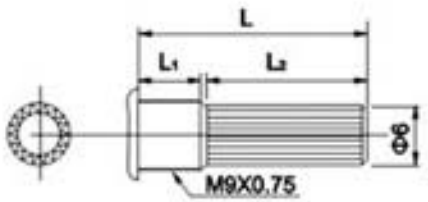

L	15	20	25
L1	7	7	7
L2	8	13	18

F

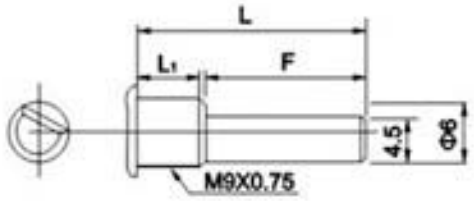

L	15	20	25
L1	7	7	7
F	8	13	18

D

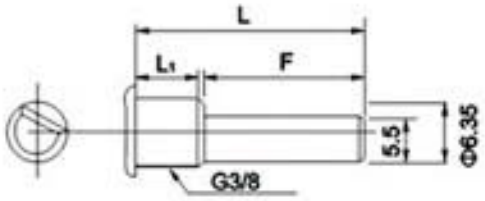

L	15	18	21	25	29	38
L1	7	7	7	7	7	7
F	8	11	14	18	21	31

R

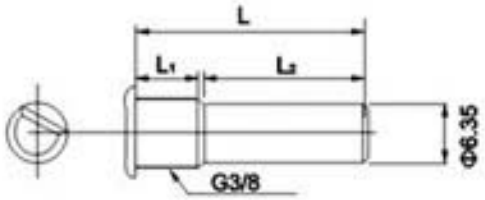

L	15	18	21	25	29	38
L1	7	7	7	7	7	7
L2	8	11	14	18	21	31

Slide Switch Series

KLS7-SK01-12D02 (1P2T) Slide Switch Series

SPECIFICATIONS

Rating: 0. 3A 50VDC
Contact Resistance: 30mΩ Max
Insulation Resistance:500VDC 100MΩ Min
Dielectric Strength:500V AC 1 Minute
Operating Force:100gf~800gf
Electrical Life :10,000 cycles

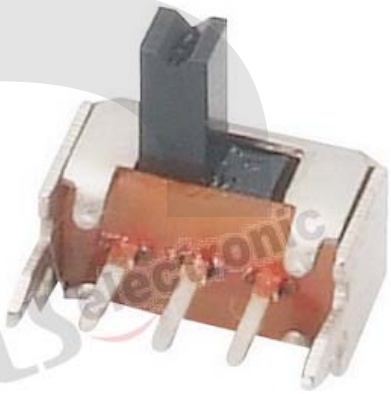

L=2 · 5

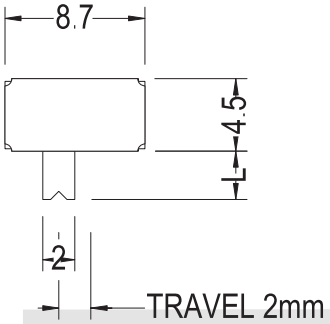

SCHEMATIC

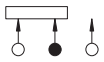

P.C.B. HOLE DETAIL

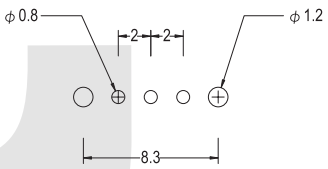

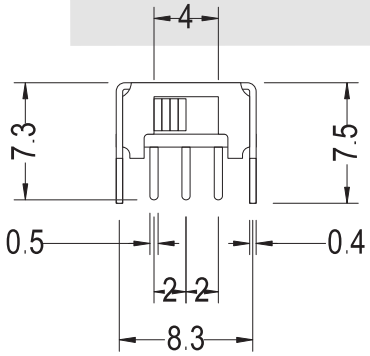

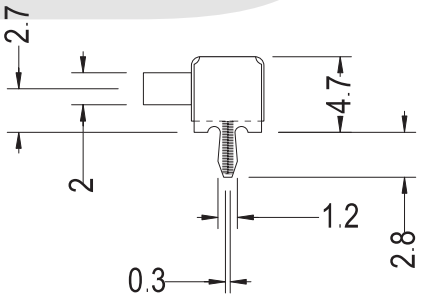

ORDER INFORMATION

KLS7-SK01 - 1 2 D 02 - X X - X

- Part Number
- Slide Switch Type
- Pole
- Throw
- Operating Force
- Knobe Height
- Sequential No.

Travelling					
C	D	E	F	G	H
1. 5	2. 0	2. 5	3. 0	3. 5	4. 0
I	J	K	L	N	P
4. 5	5. 0	5. 5	6. 0	7. 0	8. 0

Knob Type

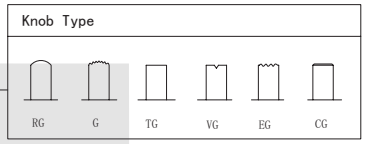

Slide Switch Series

KLS7-SK02-12E12 (1P2T) Slide Switch Series

SPECIFICATIONS

Rating: 0. 5A 50VDC
Contact Resistance: 30mΩ Max
Insulation Resistance:500VDC 100MΩ Min
Dielectric Strength:500V AC 1 Minute
Operating Force:100gf~800gf
Electrical Life :10,000 cycles



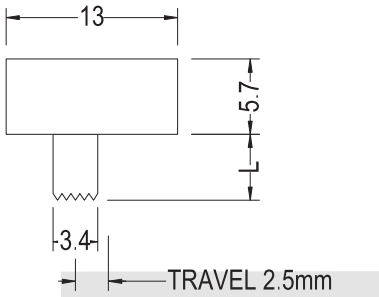

SCHEMATIC

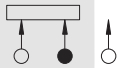

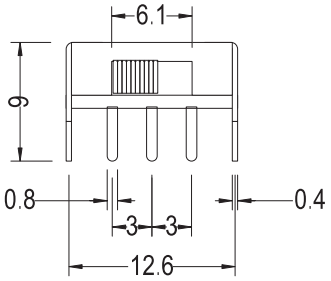

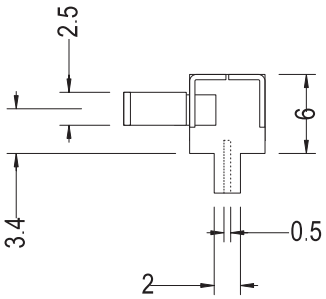

P.C.B. HOLE DETAIL

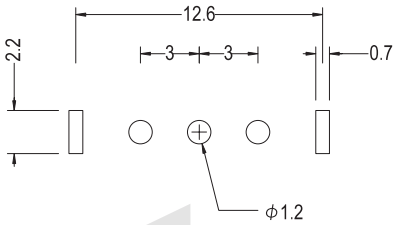

ORDER INFORMATION

KLS7-SK02 - 1 2 E 12 - X X - X

Part Number
Slide Switch Type
Pole
Throw

Travelling					
C	D	E	F	G	H
1. 5	2. 0	2. 5	3. 0	3. 5	4. 0
I	J	K	L	N	P
4. 5	5. 0	5. 5	6. 0	7. 0	8. 0

Operating Force
Knobe Height
Sequential No.

Knob Type

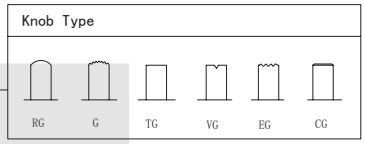

Slide Switch Series

KLS7-SS01-12E09 (1P2T) Slide Switch Series

SPECIFICATIONS

Rating: 0.3A 50VDC
Contact Resistance: 50MΩ max
Insulation Resistance:500VDC 100MΩ Min
Dielectric Strength:100V AC 1 Minute
Operating Force:100gf~800gf
Electrical Life :10,000 cycles



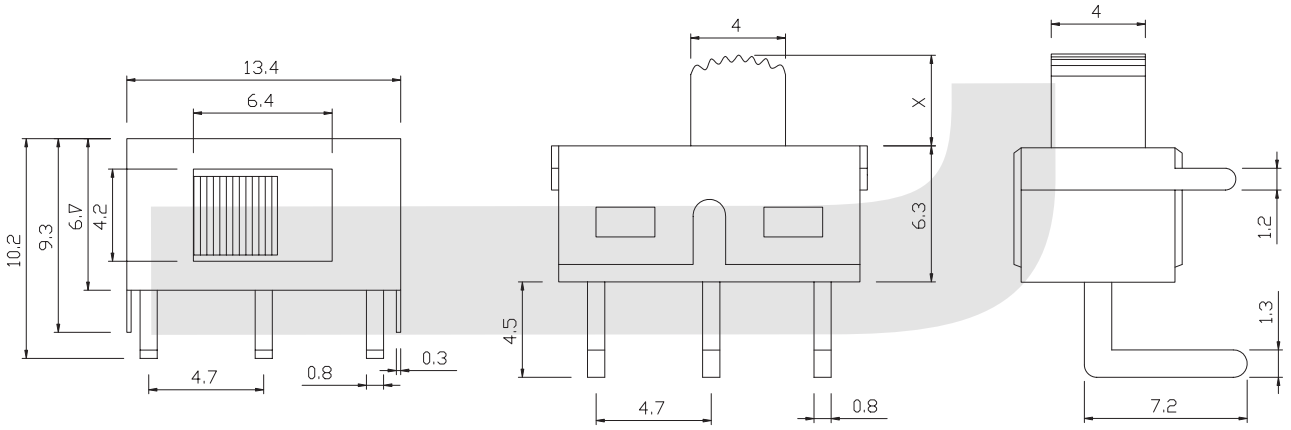

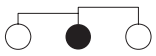

ORDER INFORMATION

KLS7-SS01 - 1 2 E 09 - X X - X

- Part Number
- Slide Switch Type
- Pole
- Throw
- Travelling
- Sequential No.
- Knobe Height
- Operating Force
- Knob Type

Travelling					
C	D	E	F	G	H
1.5	2.0	2.5	3.0	3.5	4.0
I	J	K	L	N	P
4.5	5.0	5.5	6.0	7.0	8.0

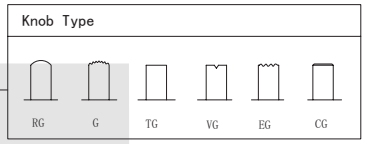

Slide Switch Series

KLS7-SS01-12E10 (1P2T) Slide Switch Series

SPECIFICATIONS

Rating: 0.3A 50VDC
Contact Resistance: 50MΩ max
Insulation Resistance:500VDC 100MΩ Min
Dielectric Strength:100V AC 1 Minute
Operating Force:100gf~800gf
Electrical Life :10,000 cycles



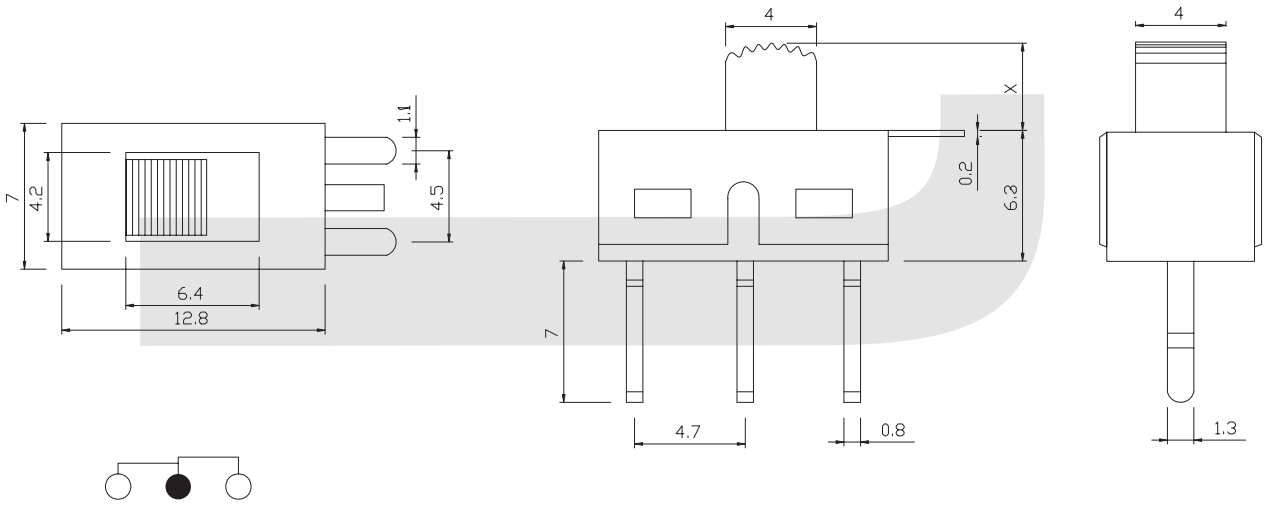

ORDER INFORMATION

KLS7-SS01 - 1 2 E 10 - X X - X

- Part Number
- Slide Switch Type
- Pole
- Throw

Travelling					
C	D	E	F	G	H
1.5	2.0	2.5	3.0	3.5	4.0
I	J	K	L	N	P
4.5	5.0	5.5	6.0	7.0	8.0

- Sequential No.
- Knobe Height
- Operating Force

Knob Type

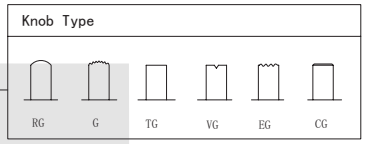

Slide Switch Series

KLS7-SS01-12E13 (1P2T) Slide Switch Series

SPECIFICATIONS

Rating: 0.3A 50VDC
Contact Resistance: 50MΩ max
Insulation Resistance:500VDC 100MΩ Min
Dielectric Strength:100V AC 1 Minute
Operating Force:100gf~800gf
Electrical Life :10,000 cycles



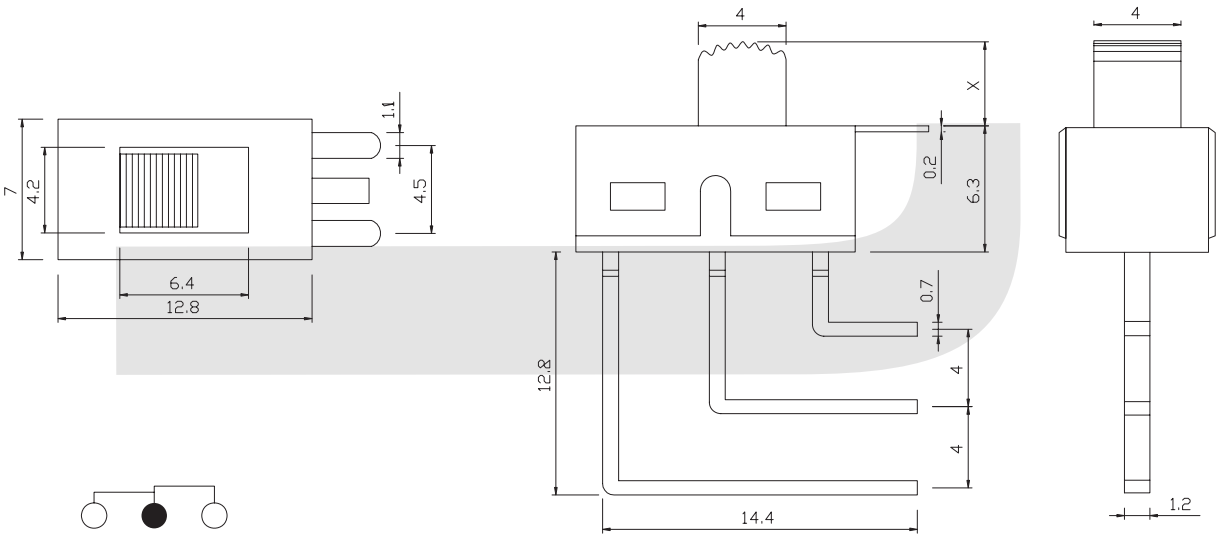

ORDER INFORMATION

KLS7-SS01 - 1 2 E 13 - X X - X

- Part Number
- Slide Switch Type
- Pole
- Throw
- Operating Force
- Knobe Height
- Sequential No.

Travelling					
C	D	E	F	G	H
1.5	2.0	2.5	3.0	3.5	4.0
I	J	K	L	N	P
4.5	5.0	5.5	6.0	7.0	8.0

Knob Type

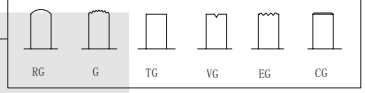

Slide Switch Series

KLS7-SS02-12F16 (1P2T) Slide Switch Series

SPECIFICATIONS

Rating: 0.5A 50VDC
Contact Resistance: 50MΩ max
Insulation Resistance:500VDC 100MΩ Min
Dielectric Strength:100V AC 1 Minute
Operating Force:100gf~800gf
Electrical Life :10,000 cycles



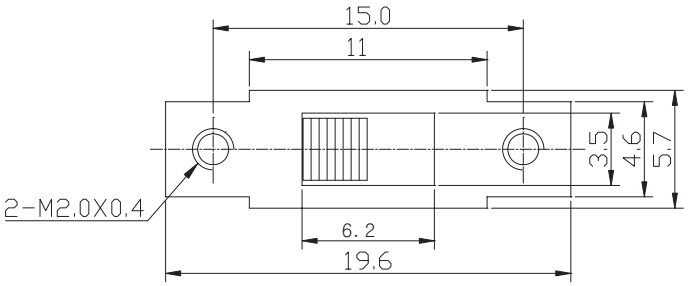

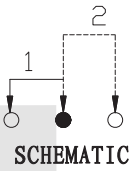

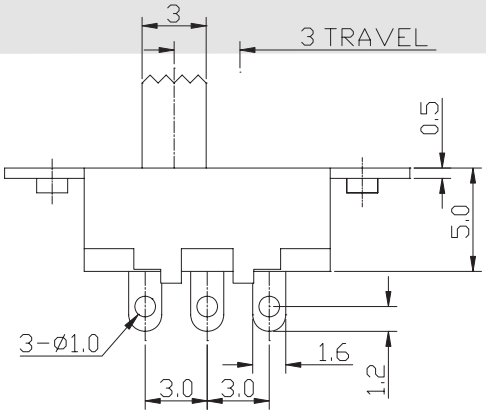

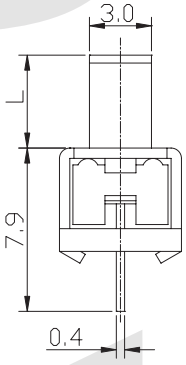

ORDER INFORMATION

KLS7-SS02 - 1 2 F 16 - X X - X

Part Number
Slide Switch Type
Pole
Throw
Operating Force
Knobe Height
Sequential No.

Travelling					
C	D	E	F	G	H
1.5	2.0	2.5	3.0	3.5	4.0
I	J	K	L	N	P
4.5	5.0	5.5	6.0	7.0	8.0

Knob Type

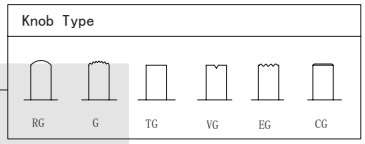

Slide Switch Series

KLS7-SS02-12F20 (1P2T) Slide Switch Series

SPECIFICATIONS

Rating: 0.5A 50VDC
Contact Resistance: 50MΩ max
Insulation Resistance:500VDC 100MΩ Min
Dielectric Strength:100V AC 1 Minute
Operating Force:100gf~800gf
Electrical Life :10,000 cycles



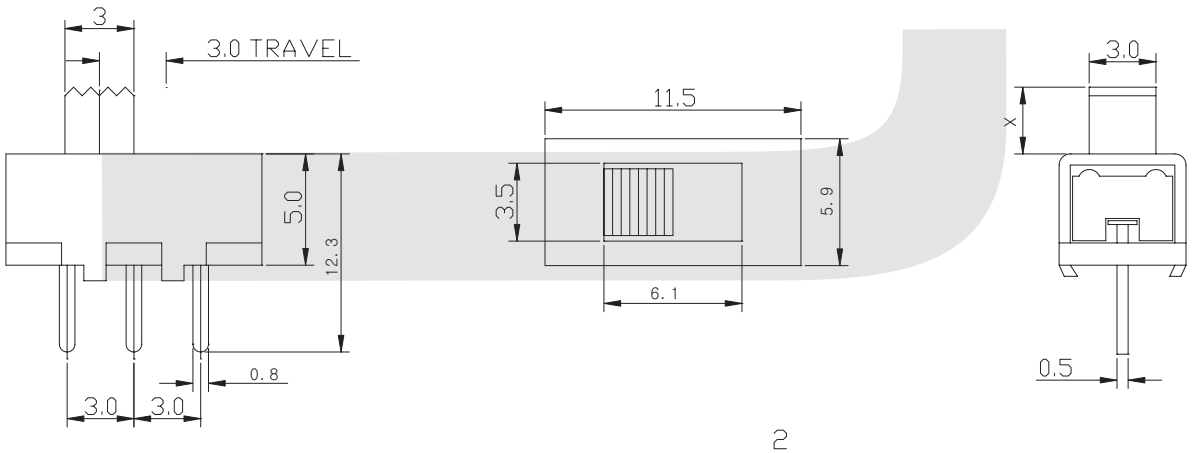

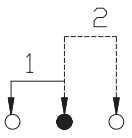

SCHEMATIC

ORDER INFORMATION

KLS7-SS02 - 1 2 F 20 - X X - X

- Part Number
- Slide Switch Type
- Pole
- Throw
- Operating Force
- Knobe Height
- Sequential No.

Travelling					
C	D	E	F	G	H
1.5	2.0	2.5	3.0	3.5	4.0
I	J	K	L	N	P
4.5	5.0	5.5	6.0	7.0	8.0

Knob Type

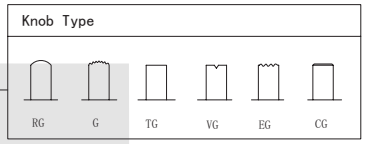

Slide Switch Series

KLS7-SS02-12F55 (1P2T) Slide Switch Series

VII

SPECIFICATIONS

Rating: 0.5A 50VDC
Contact Resistance: 50MΩ max
Insulation Resistance:500VDC 100MΩ Min
Dielectric Strength:100V AC 1 Minute
Operating Force:100gf~800gf
Electrical Life :10,000 cycles



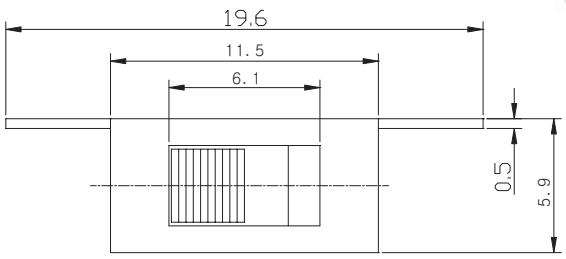

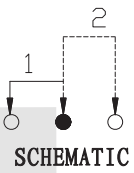

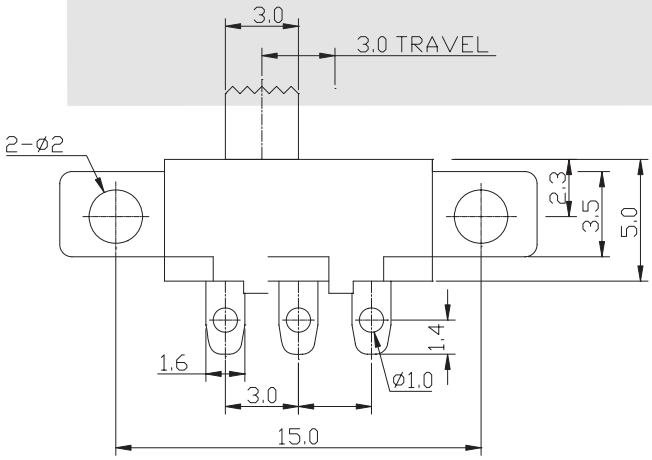

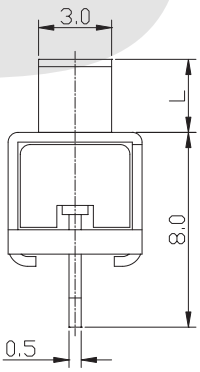

ORDER INFORMATION

KLS7-SS02 - 1 2 F 55 - X X - X

- Part Number
- Slide Switch Type
- Pole
- Throw
- Operating Force
- Knobe Height
- Sequential No.

Travelling					
C	D	E	F	G	H
1.5	2.0	2.5	3.0	3.5	4.0
I	J	K	L	N	P
4.5	5.0	5.5	6.0	7.0	8.0

Knob Type

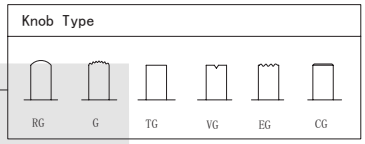

Slide Switch Series

KLS7-SS03-12D01 (1P2T) Slide Switch Series

SPECIFICATIONS

Rating: 0.3A 50VDC
Contact Resistance: 50MΩ max
Insulation Resistance:500VDC 100MΩ Min
Dielectric Strength:100V AC 1 Minute
Operating Force:100gf~800gf
Electrical Life :10,000 cycles



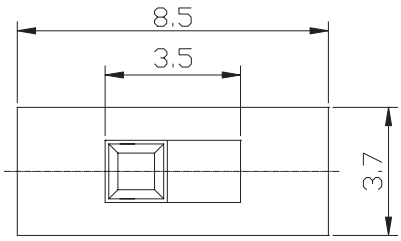

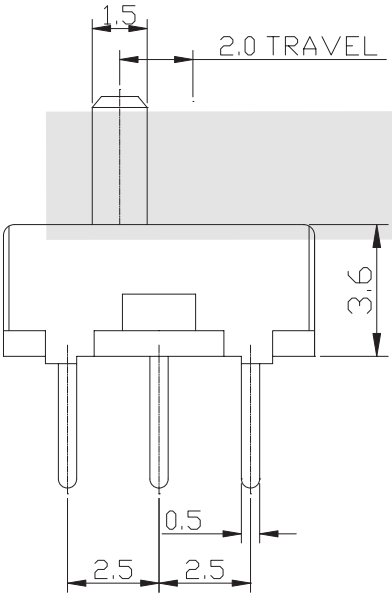

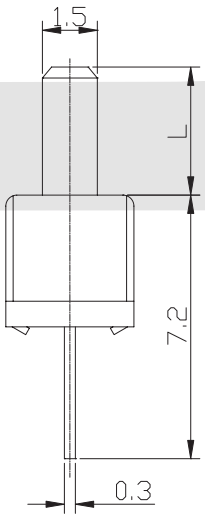

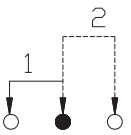

SCHEMATIC

ORDER INFORMATION

KLS7-SS03 - 1 2 D 01 - X X - X

Part Number
Slide Switch Type
Pole
Throw
Operating Force
Knobe Height
Sequential No.

Travelling					
C	D	E	F	G	H
1.5	2.0	2.5	3.0	3.5	4.0
I	J	K	L	N	P
4.5	5.0	5.5	6.0	7.0	8.0

Knob Type

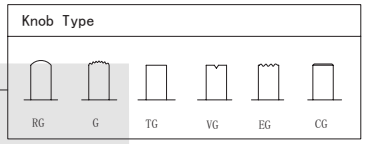

Slide Switch Series

KLS7-SS03-12D02 (1P2T) Slide Switch Series

SPECIFICATIONS

Rating: 0.3A 50VDC
Contact Resistance: 50MΩ max
Insulation Resistance:500VDC 100MΩ Min
Dielectric Strength:100V AC 1 Minute
Operating Force:100gf~800gf
Electrical Life :10,000 cycles



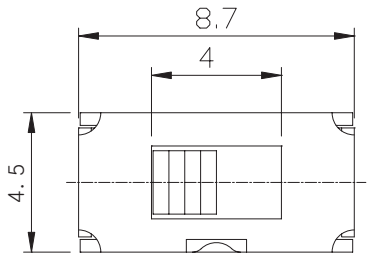

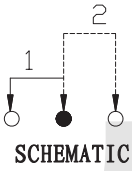

SCHEMATIC

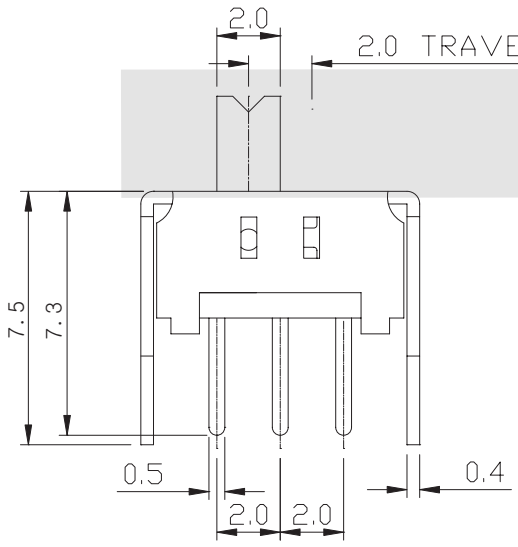

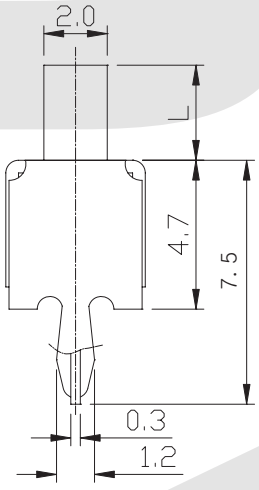

ORDER INFORMATION

KLS7-SS03 - 1 2 D 02 - X X - X

- Part Number
- Slide Switch Type
- Pole
- Throw
- Operating Force
- Knobe Height
- Sequential No.

Travelling					
C	D	E	F	G	H
1.5	2.0	2.5	3.0	3.5	4.0
I	J	K	L	N	P
4.5	5.0	5.5	6.0	7.0	8.0

Knob Type

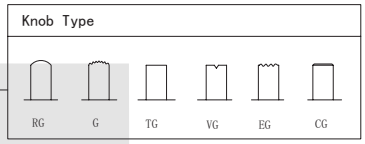

Slide Switch Series

KLS7-SS04-12F23 (1P2T) Slide Switch Series

SPECIFICATIONS

Rating: 0.5A 50VDC
Contact Resistance: 50MΩ max
Insulation Resistance:500VDC 100MΩ Min
Dielectric Strength:100V AC 1 Minute
Operating Force:100gf~800gf
Electrical Life :10,000 cycles



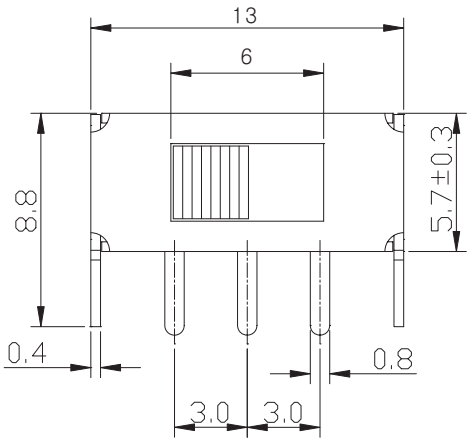

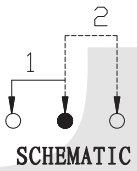

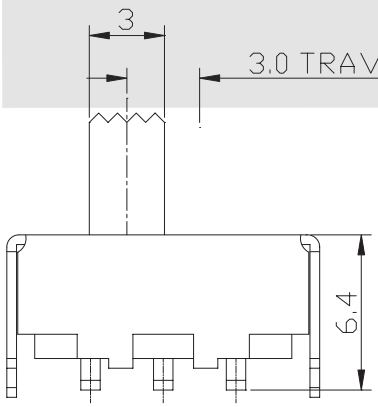

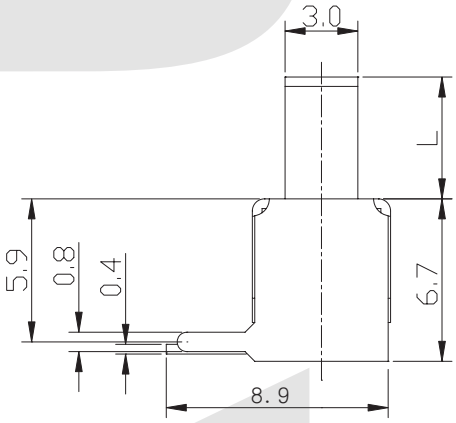

ORDER INFORMATION

KLS7-SS04 - 1 2 F 23 - X X - X

- Part Number
- Slide Switch Type
- Pole
- Throw
- Operating Force
- Knobe Height
- Sequential No.

Travelling					
C	D	E	F	G	H
1.5	2.0	2.5	3.0	3.5	4.0
I	J	K	L	N	P
4.5	5.0	5.5	6.0	7.0	8.0

Knob Type

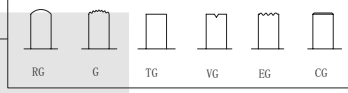

Slide Switch Series

KLS7-SS05-12G13 (1P2T) Slide Switch Series

SPECIFICATIONS

Rating: 0.5A 50VDC
Contact Resistance: 50MΩ max
Insulation Resistance:500VDC 100MΩ Min
Dielectric Strength:100V AC 1 Minute
Operating Force:100gf~800gf
Electrical Life :10,000 cycles



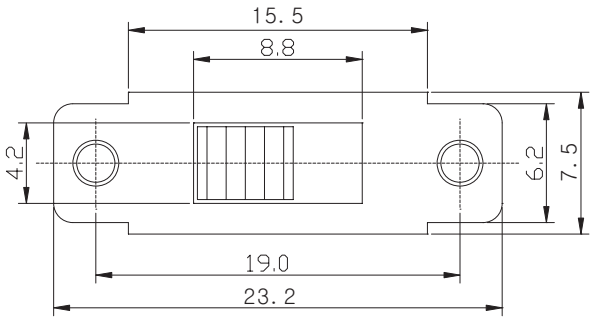

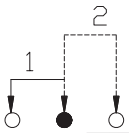

SCHEMATIC

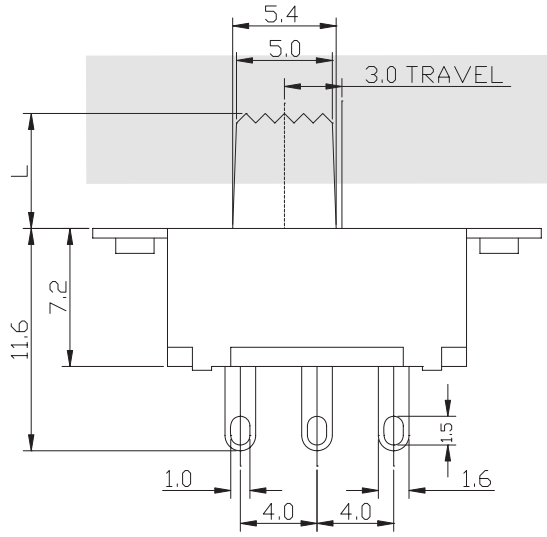

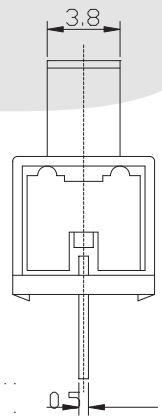

ORDER INFORMATION

KLS7-SS05 - 1 2 G 13 - X X - X

Part Number
Slide Switch Type
Pole
Throw

Travelling					
C	D	E	F	G	H
1.5	2.0	2.5	3.0	3.5	4.0
I	J	K	L	N	P
4.5	5.0	5.5	6.0	7.0	8.0

Operating Force
Knobe Height
Sequential No.

Knob Type

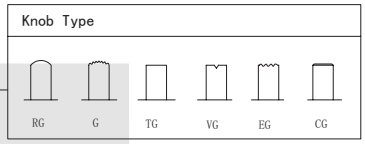

Slide Switch Series

KLS7-SS06-12F41 (1P2T) Slide Switch Series

SPECIFICATIONS

Rating: 0.5A 50VDC
Contact Resistance: 50MΩ max
Insulation Resistance:500VDC 100MΩ Min
Dielectric Strength:100V AC 1 Minute
Operating Force:100gf~800gf
Electrical Life :10,000 cycles



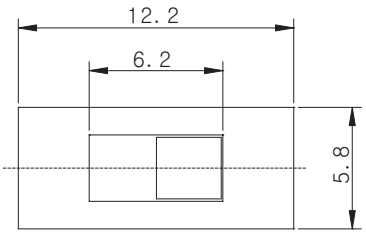

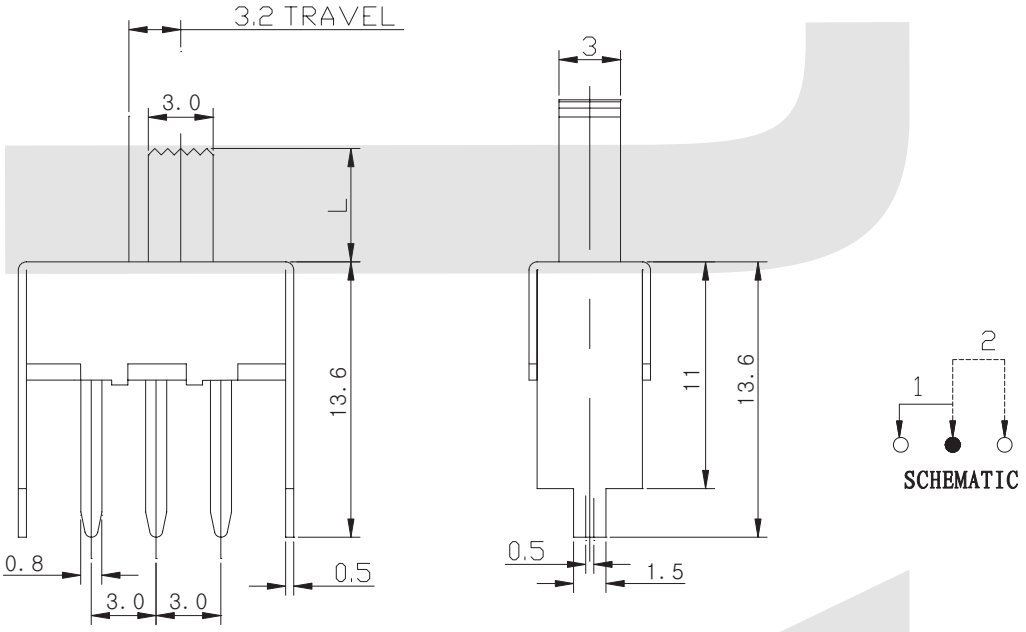

ORDER INFORMATION

KLS7-SS06 - 1 2 F 41 - X X - X

- Part Number
- Slide Switch Type
- Pole
- Throw
- Operating Force
- Knobe Height
- Sequential No.

Travelling					
C	D	E	F	G	H
1. 5	2. 0	2. 5	3. 0	3. 5	4. 0
I	J	K	L	N	P
4. 5	5. 0	5. 5	6. 0	7. 0	8. 0

Knob Type

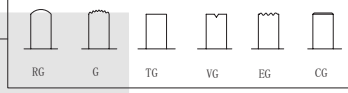

Slide Switch Series

KLS7-SS07-12F02 (1P2T) Slide Switch Series

SPECIFICATIONS

Rating: 0.5A 50VDC
Contact Resistance: 50MΩ max
Insulation Resistance:500VDC 100MΩ Min
Dielectric Strength:100V AC 1 Minute
Operating Force:100gf~800gf
Electrical Life :10,000 cycles



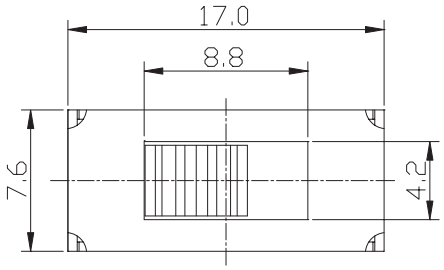

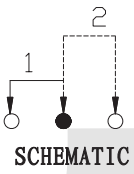

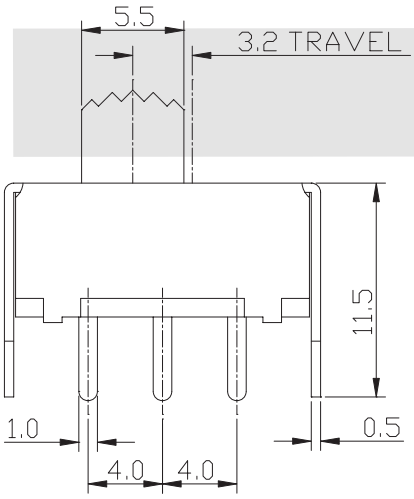

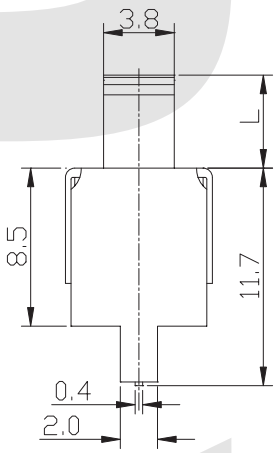

ORDER INFORMATION

KLS7-SS07 - 1 2 F 02 - X X - X

- Part Number
- Slide Switch Type
- Pole
- Throw
- Operating Force
- Knobe Height
- Sequential No.

Travelling					
C	D	E	F	G	H
1.5	2.0	2.5	3.0	3.5	4.0
I	J	K	L	N	P
4.5	5.0	5.5	6.0	7.0	8.0

Knob Type

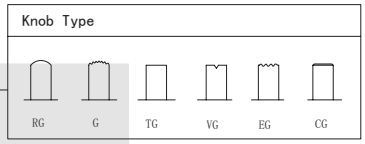

Slide Switch Series

KLS7-SS08-13D01 (1P3T) Slide Switch Series

SPECIFICATIONS

Rating: 0.3A 50VDC
Contact Resistance: 50MΩ max
Insulation Resistance:500VDC 100MΩ Min
Dielectric Strength:100V AC 1 Minute
Operating Force:100gf~800gf
Electrical Life :10,000 cycles



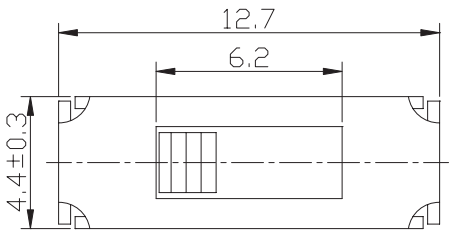

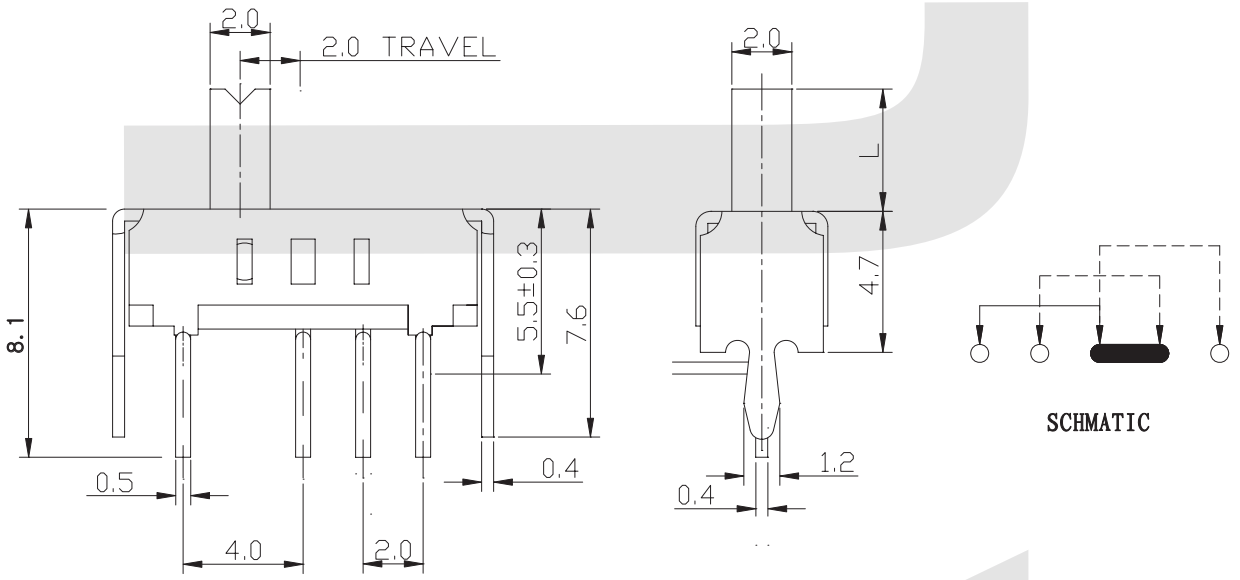

ORDER INFORMATION

KLS7-SS08 - 1 3 D 01 - X X - X

- Part Number
- Slide Switch Type
- Pole
- Throw
- Travelling

C	D	E	F	G	H
1.5	2.0	2.5	3.0	3.5	4.0
I	J	K	L	N	P
4.5	5.0	5.5	6.0	7.0	8.0

- Sequential No.
- Knobe Height
- Operating Force

Knob Type

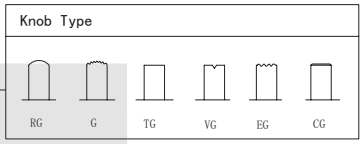

Slide Switch Series

KLS7-SS09-13F06 (1P3T) Slide Switch Series

SPECIFICATIONS

Rating: 0.5A 50VDC
Contact Resistance: 50MΩ max
Insulation Resistance:500VDC 100MΩ Min
Dielectric Strength:100V AC 1 Minute
Operating Force:100gf~800gf
Electrical Life :10,000 cycles



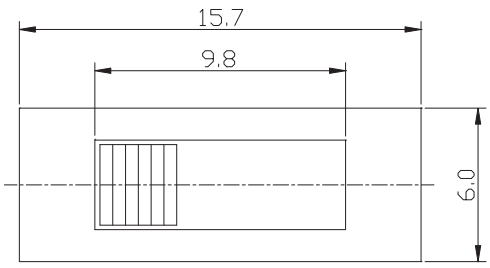

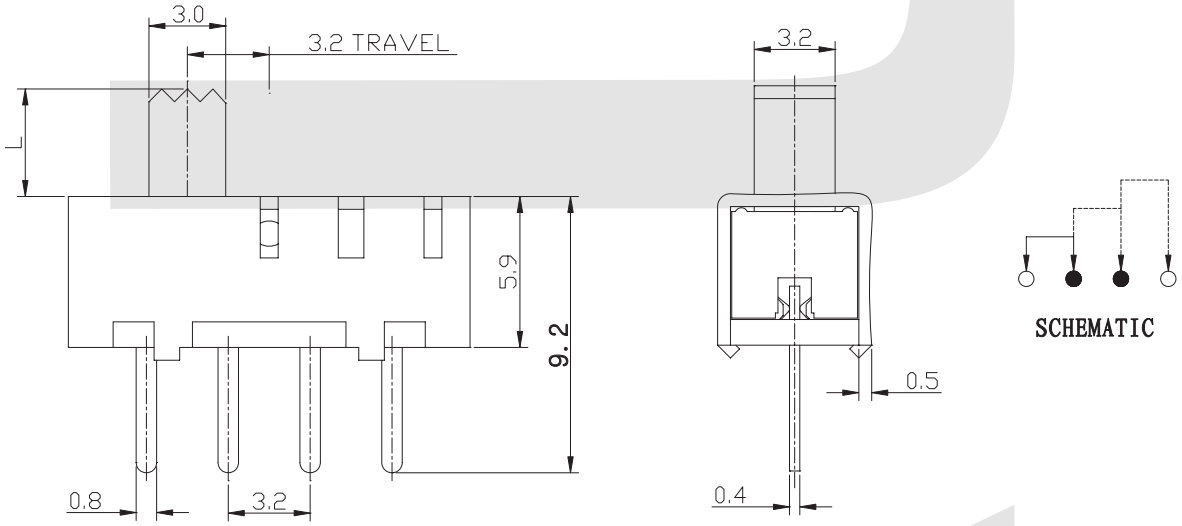

SCHEMATIC

ORDER INFORMATION

KLS7-SS09 - 1 3 F 06 - X X - X

- Part Number
- Slide Switch Type
- Pole
- Throw
- Travelling

C	D	E	F	G	H
1.5	2.0	2.5	3.0	3.5	4.0
I	J	K	L	N	P
4.5	5.0	5.5	6.0	7.0	8.0

- Sequential No.
- Knobe Height
- Operating Force

Knob Type

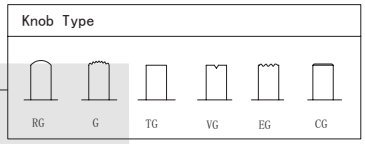

Slide Switch Series

KLS7-SS10-13F24 (1P3T) Slide Switch Series

SPECIFICATIONS

Rating: 0.5A 50VDC
Contact Resistance: 50MΩ max
Insulation Resistance:500VDC 100MΩ Min
Dielectric Strength:100V AC 1 Minute
Operating Force:100gf~800gf
Electrical Life :10,000 cycles

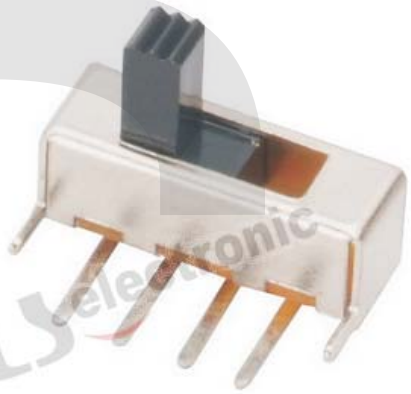

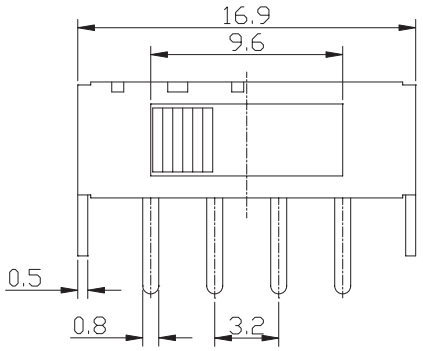

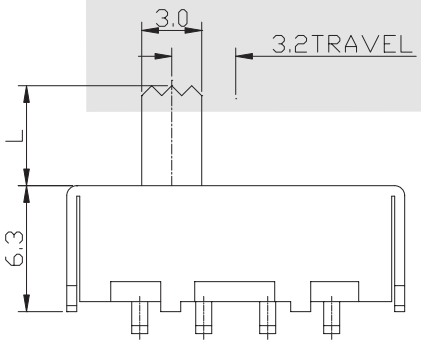

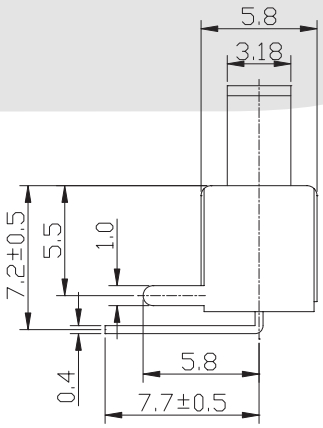

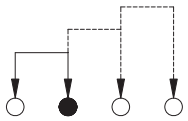

SCHEMATIC

ORDER INFORMATION

KLS7-SS10 - 1 3 F 24 - X X - X

- Part Number
- Slide Switch Type
- Pole
- Throw
- Operating Force
- Knobe Height
- Sequential No.

Travelling					
C	D	E	F	G	H
1.5	2.0	2.5	3.0	3.5	4.0
I	J	K	L	N	P
4.5	5.0	5.5	6.0	7.0	8.0

Knob Type

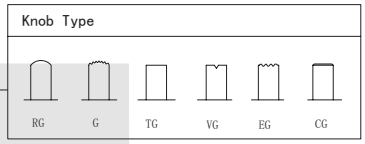

Slide Switch Series

KLS7-SK03-13D01 (1P3T) Slide Switch Series

SPECIFICATIONS

Rating: 0. 5A 50VDC
Contact Resistance: 30mΩ Max
Insulation Resistance:500VDC 100MΩ Min
Dielectric Strength:500V AC 1 Minute
Operating Force:100gf~800gf
Electrical Life :10,000 cycles



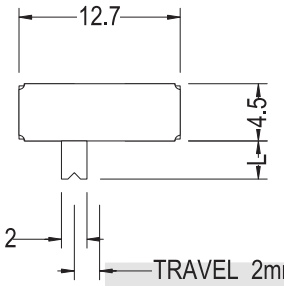

SCHEMATIC

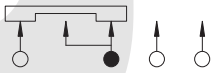

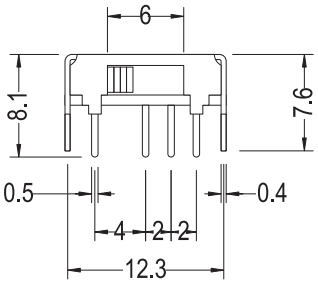

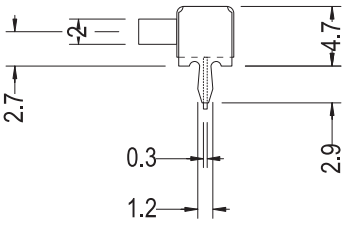

P.C.B. HOLE DETAIL

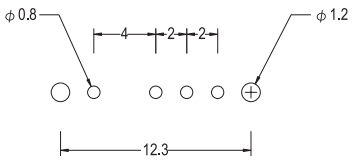

ORDER INFORMATION

KLS7-SK03 - 1 3 D 01 - X X - X

- Part Number
- Slide Switch Type
- Pole
- Throw
- Operating Force
- Knobe Height
- Sequential No.

Travelling					
C	D	E	F	G	H
1. 5	2. 0	2. 5	3. 0	3. 5	4. 0
I	J	K	L	N	P
4. 5	5. 0	5. 5	6. 0	7. 0	8. 0

Knob Type

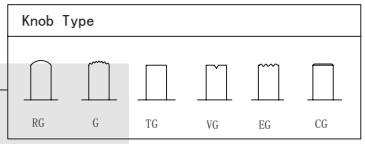

Slide Switch Series

KLS7-SK03-14D10 (1P4T) Slide Switch Series

SPECIFICATIONS

Rating: 0. 3A 50VDC
Contact Resistance: 30mΩ Max
Insulation Resistance:500VDC 100MΩ Min
Dielectric Strength:500V AC 1 Minute
Operating Force:100gf~800gf
Electrical Life :10,000 cycles

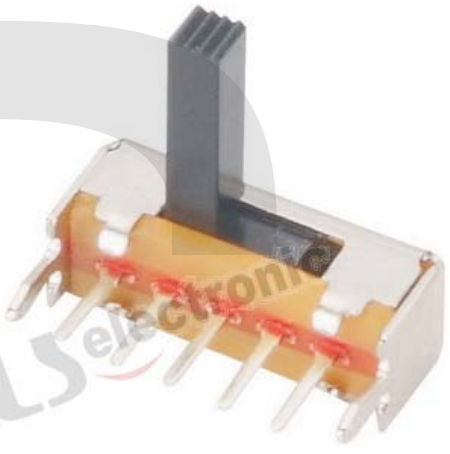

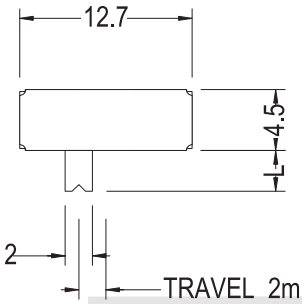

SCHEMATIC

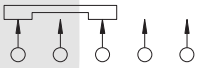

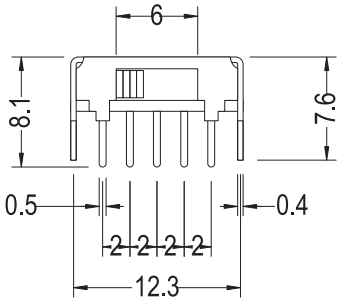

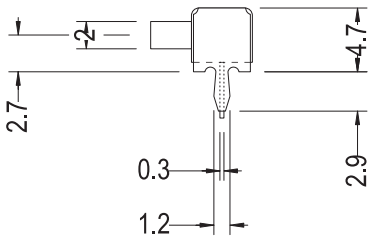

P.C.B. HOLE DETAIL

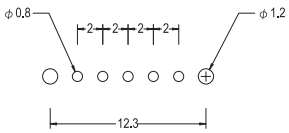

ORDER INFORMATION

KLS7-SK03 - 1 4 D 10 - X X - X

- Part Number
- Slide Switch Type
- Pole
- Throw
- Operating Force
- Knobe Height
- Sequential No.

Travelling					
C	D	E	F	G	H
1. 5	2. 0	2. 5	3. 0	3. 5	4. 0
I	J	K	L	N	P
4. 5	5. 0	5. 5	6. 0	7. 0	8. 0

Knob Type

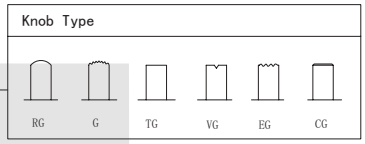

Slide Switch Series

KLS7-SK04-14D02 (1P4T) Slide Switch Series

SPECIFICATIONS

Rating: 0. 3A 50VDC
Contact Resistance: 30mΩ Max
Insulation Resistance:500VDC 100MΩ Min
Dielectric Strength:500V AC 1 Minute
Operating Force:100gf~800gf
Electrical Life :10,000 cycles



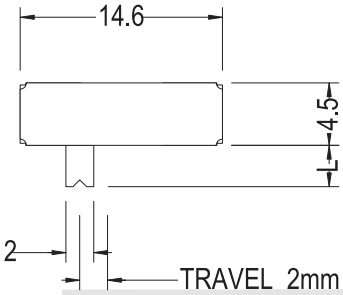

SCHEMATIC

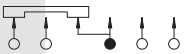

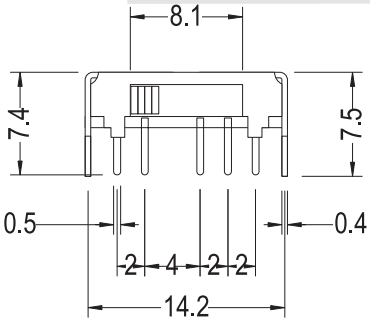

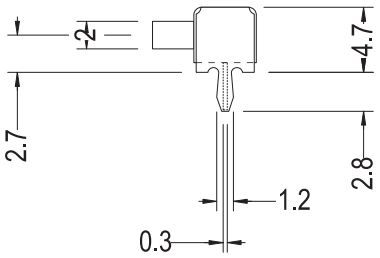

P.C.B. HOLE DETAIL

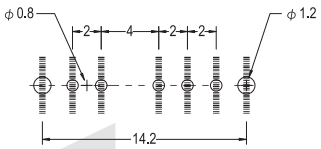

ORDER INFORMATION

KLS7-SK04 - 1 4 D 02 - X X - X

- Part Number
- Slide Switch Type
- Pole
- Throw
- Operating Force
- Knobe Height
- Sequential No.

Travelling					
C	D	E	F	G	H
1. 5	2. 0	2. 5	3. 0	3. 5	4. 0
I	J	K	L	N	P
4. 5	5. 0	5. 5	6. 0	7. 0	8. 0

Knob Type

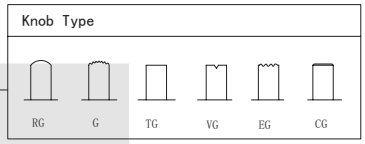

Slide Switch Series

KLS7-SS11-16F03 (1P6T) Slide Switch Series

SPECIFICATIONS

Rating: 0.5A 50VDC
Contact Resistance: 50MΩ max
Insulation Resistance:500VDC 100MΩ Min
Dielectric Strength:100V AC 1 Minute
Operating Force:100gf~800gf
Electrical Life :10,000 cycles

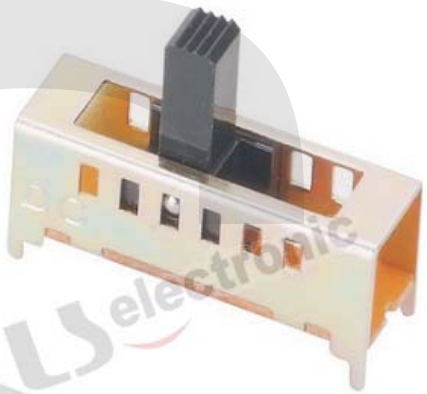

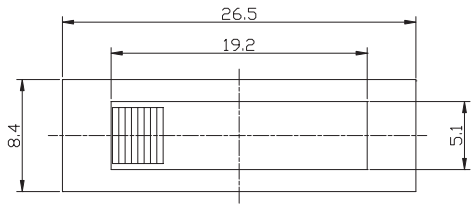

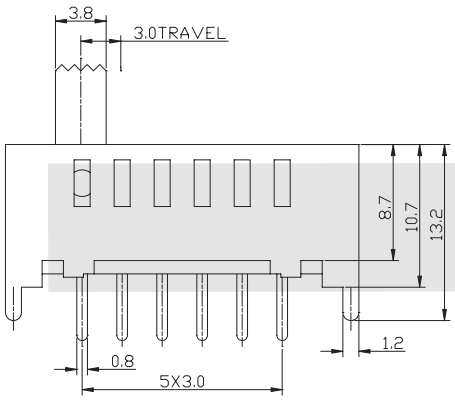

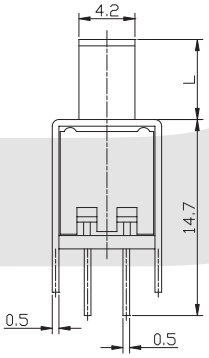

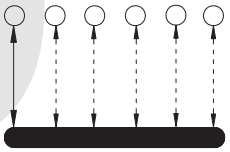

SCHMATIC

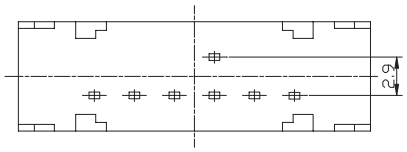

ORDER INFORMATION

KLS7-SS11 - 1 6 F 03 - X X - X

- Part Number
- Slide Switch Type
- Pole
- Throw
- Travelling

C	D	E	F	G	H
1.5	2.0	2.5	3.0	3.5	4.0
I	J	K	L	N	P
4.5	5.0	5.5	6.0	7.0	8.0

- Sequential No.
- Knobe Height
- Operating Force

Knob Type

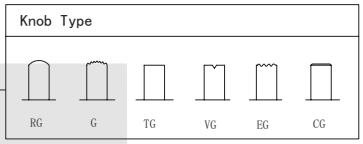

Slide Switch Series

KLS7-SK30-22D13 (2P2T) Slide Switch Series

SPECIFICATIONS

Rating: 0. 3A 50VDC
Contact Resistance: 30mΩ Max
Insulation Resistance:500VDC 100MΩ Min
Dielectric Strength:500V AC 1 Minute
Operating Force:100gf~800gf
Electrical Life :10,000 cycles

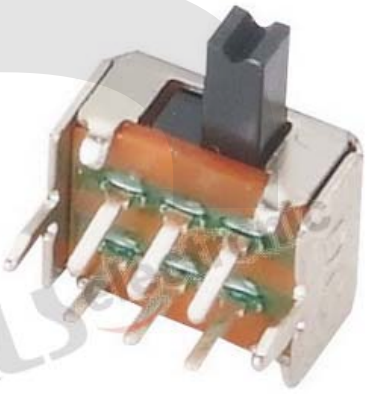

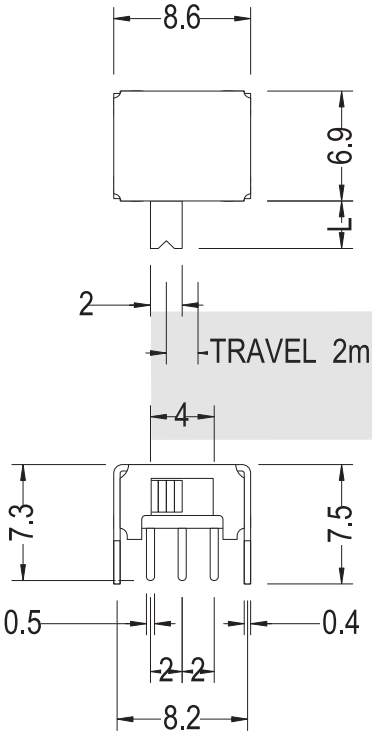

SCHEMATIC

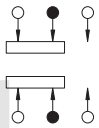

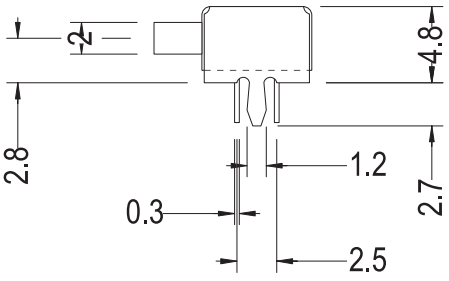

P.C.B. HOLE DETAIL

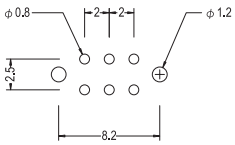

ORDER INFORMATION

KLS7-SK30 - 2 2 D 13 - X X - X

- Part Number
- Slide Switch Type
- Pole
- Throw
- Operating Force
- Knobe Height
- Sequential No.

Travelling					
C	D	E	F	G	H
1. 5	2. 0	2. 5	3. 0	3. 5	4. 0
I	J	K	L	N	P
4. 5	5. 0	5. 5	6. 0	7. 0	8. 0

Knob Type

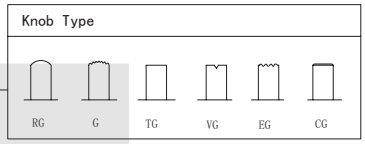

Slide Switch Series

KLS7-SK31-22F02 (2P2T) Slide Switch Series

SPECIFICATIONS

Rating: 0. 5A 50VDC
Contact Resistance: 30mΩ Max
Insulation Resistance:500VDC 100MΩ Min
Dielectric Strength:500V AC 1 Minute
Operating Force:100gf~800gf
Electrical Life :10,000 cycles



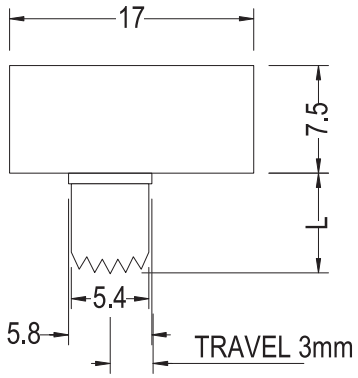

SCHEMATIC

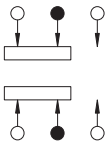

開關型號	高度 (H)	端子 (W)
SK31-22F02	9	1
SK31-22F03	10	1
SK31-22F05	11	0.9
SK31-22F07	14	1.3
SK31-22F08	18	1.3
SK31-22F09	21	1.3
SK31-22F10	12	1.3
SK31-22F12	8	1
SK31-22F16	8.5	1
SK31-22F17	9.5	1

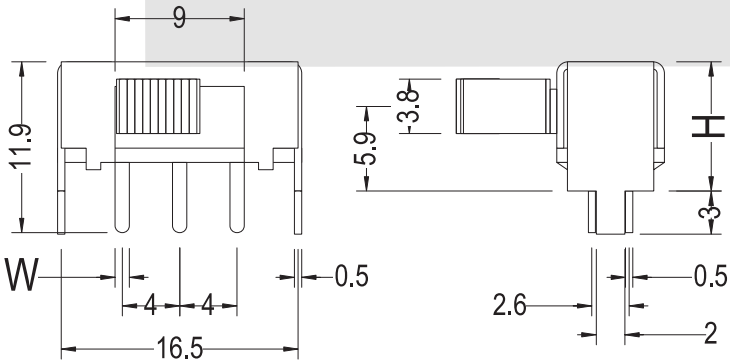

H：本體高度
W：端子寬度

P.C.B. HOLE DETAIL

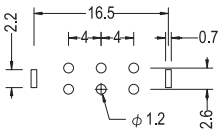

ORDER INFORMATION

KLS7-SK31 - 2 2 F 02 - X X - X

Part Number
Slide Switch Type
Pole
Throw
Operating Force
Knobe Height
Sequential No.

Travelling					
C	D	E	F	G	H
1.5	2.0	2.5	3.0	3.5	4.0
I	J	K	L	N	P
4.5	5.0	5.5	6.0	7.0	8.0

Knob Type

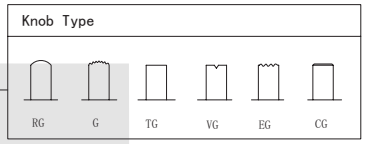

Slide Switch Series

KLS7-SK32-22F14 (2P2T) Slide Switch Series

SPECIFICATIONS

Rating: 0. 5A 50VDC
Contact Resistance: 30mΩ Max
Insulation Resistance:500VDC 100MΩ Min
Dielectric Strength:500V AC 1 Minute
Operating Force:100gf~800gf
Electrical Life :10,000 cycles



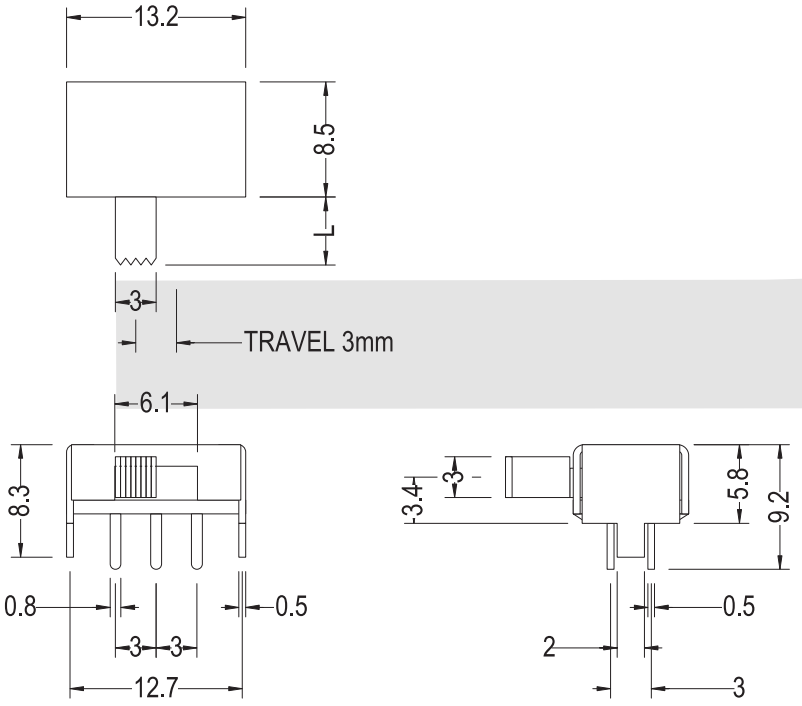

SCHEMATIC

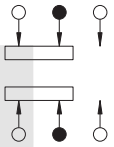

P.C.B. HOLE DETAIL

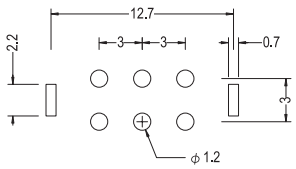

ORDER INFORMATION

KLS7-SK32 - 2 2 F 14 - X X - X

- Part Number
- Slide Switch Type
- Pole
- Throw
- Operating Force
- Knobe Height
- Sequential No.

Travelling					
C	D	E	F	G	H
1. 5	2. 0	2. 5	3. 0	3. 5	4. 0
I	J	K	L	N	P
4. 5	5. 0	5. 5	6. 0	7. 0	8. 0

Knob Type

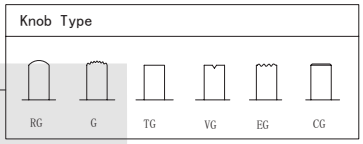

Slide Switch Series

KLS7-SK33-22H07 (2P2T) Slide Switch Series

SPECIFICATIONS

Rating: 0. 3A 50VDC
Contact Resistance: 30mΩ Max
Insulation Resistance:500VDC 100MΩ Min
Dielectric Strength:500V AC 1 Minute
Operating Force:100gf~800gf
Electrical Life :10,000 cycles

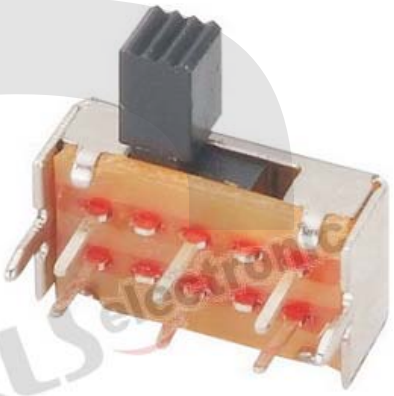

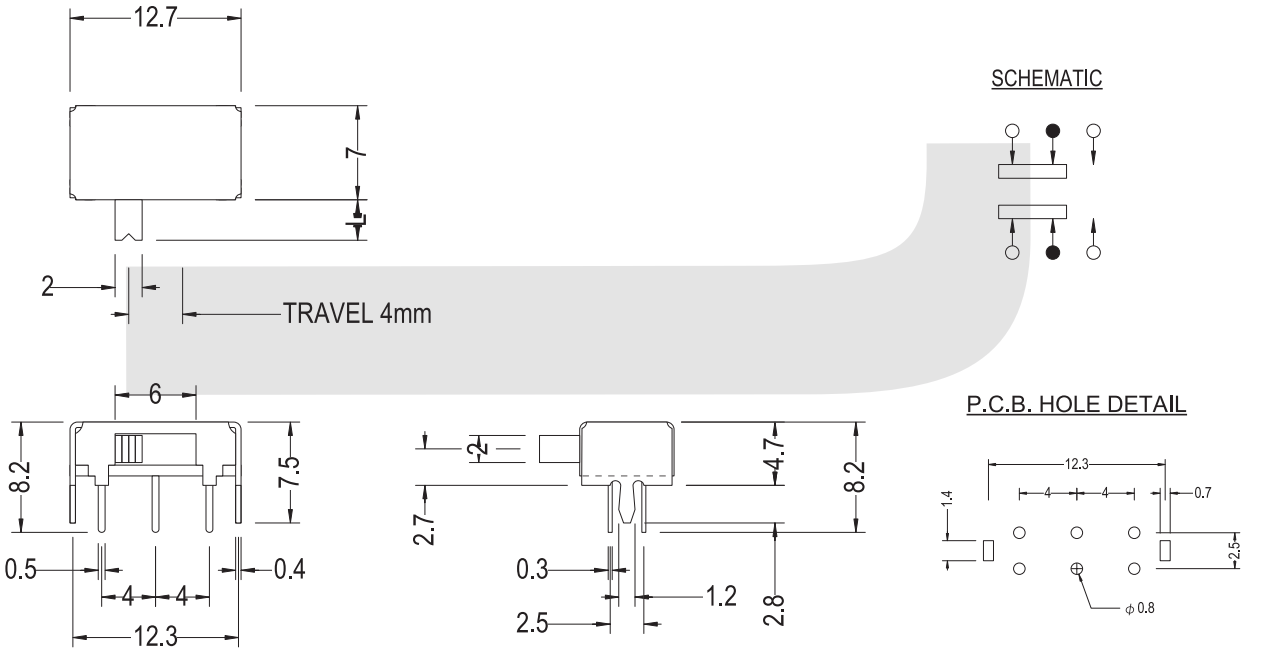

ORDER INFORMATION

KLS7-SK33 - 2 2 H 07 - X X - X

- Part Number
- Slide Switch Type
- Pole
- Throw
- Operating Force
- Knobe Height
- Sequential No.

Travelling					
C	D	E	F	G	H
1. 5	2. 0	2. 5	3. 0	3. 5	4. 0
I	J	K	L	N	P
4. 5	5. 0	5. 5	6. 0	7. 0	8. 0

Knob Type

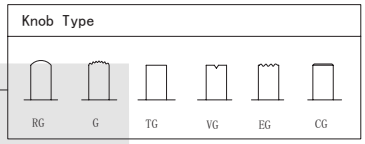

Slide Switch Series

KLS7-SK34-22H33 (2P2T) Slide Switch Series

SPECIFICATIONS

Rating: 0. 3A 50VDC
Contact Resistance: 30mΩ Max
Insulation Resistance:500VDC 100MΩ Min
Dielectric Strength:500V AC 1 Minute
Operating Force:100gf~800gf
Electrical Life :10,000 cycles

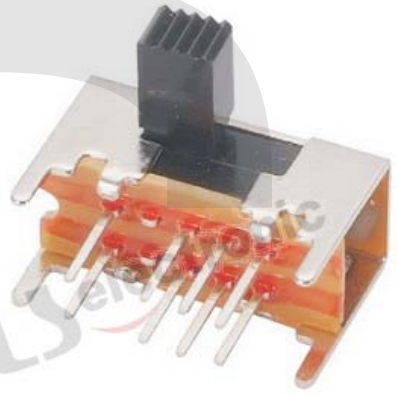

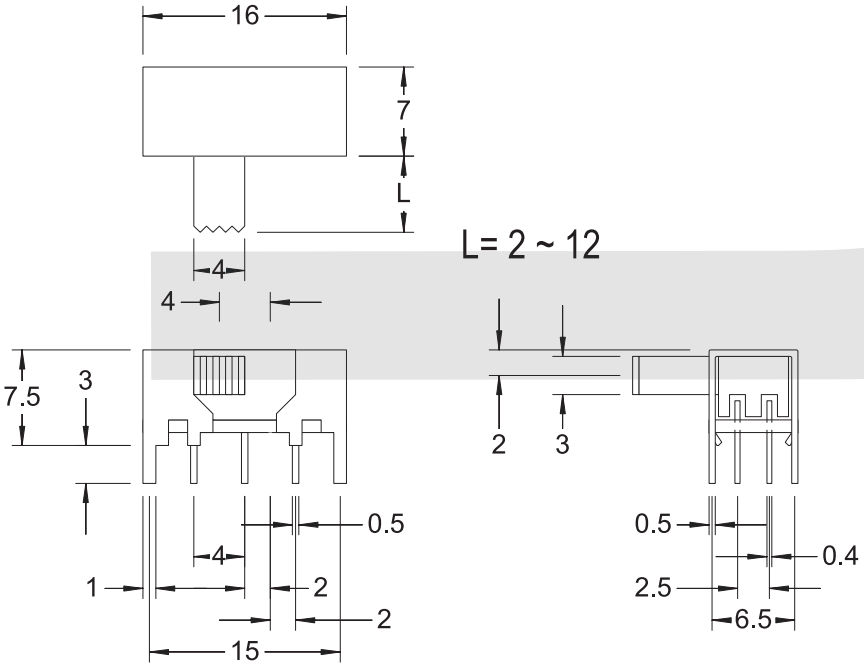

SCHEMATIC

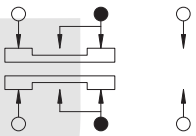

P.C.B. HOLE DETAIL

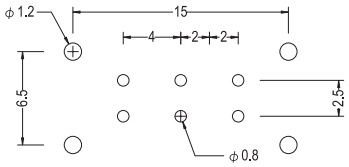

ORDER INFORMATION

KLS7-SK34 - 2 2 H 33 - X X - X

- Part Number
- Slide Switch Type
- Pole
- Throw
- Operating Force
- Knobe Height
- Sequential No.

Travelling					
C	D	E	F	G	H
1. 5	2. 0	2. 5	3. 0	3. 5	4. 0
I	J	K	L	N	P
4. 5	5. 0	5. 5	6. 0	7. 0	8. 0

Knob Type

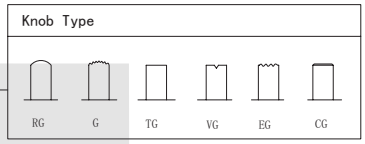

Slide Switch Series

KLS7-SS31-22D03 (2P2T) Slide Switch Series

SPECIFICATIONS

Rating: 0.3A 50VDC
Contact Resistance: 50MΩ max
Insulation Resistance:500VDC 100MΩ Min
Dielectric Strength:100V AC 1 Minute
Operating Force:100gf~800gf
Electrical Life :10,000 cycles



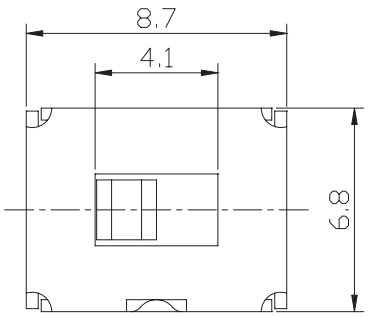

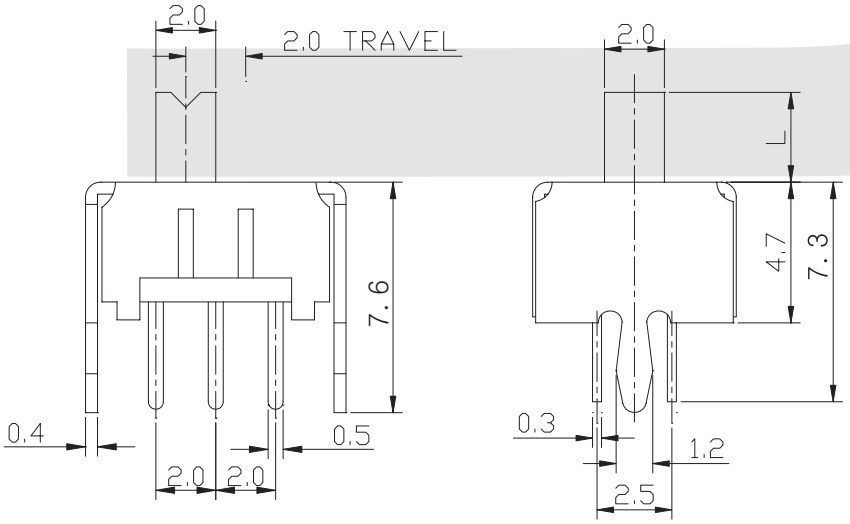

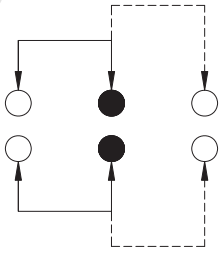

SCHEMATIC

ORDER INFORMATION

KLS7-SS31 - 2 2 D 03 - X X - X

Part Number
Slide Switch Type
Pole
Throw
Operating Force
Knobe Height
Sequential No.

Travelling					
C	D	E	F	G	H
1.5	2.0	2.5	3.0	3.5	4.0
I	J	K	L	N	P
4.5	5.0	5.5	6.0	7.0	8.0

Knob Type

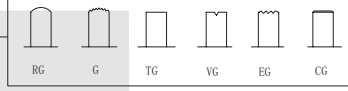

Slide Switch Series

KLS7-SS32-22F03 (2P2T) Slide Switch Series

SPECIFICATIONS

Rating: 0.3A 50VDC
Contact Resistance: 50MΩ max
Insulation Resistance:500VDC 100MΩ Min
Dielectric Strength:100V AC 1 Minute
Operating Force:100gf~800gf
Electrical Life :10,000 cycles



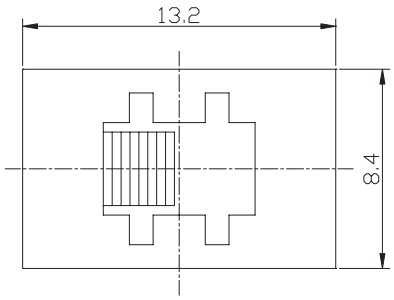

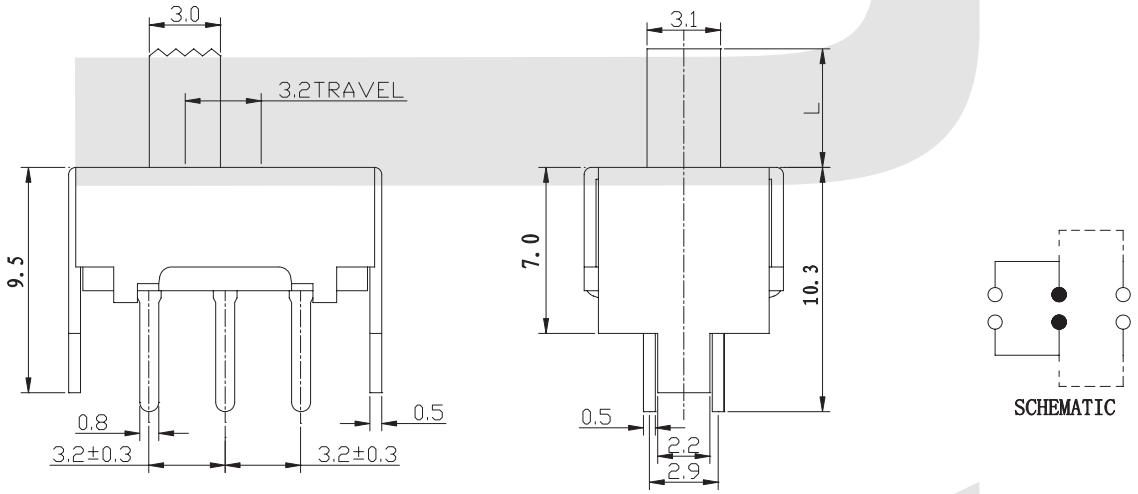

ORDER INFORMATION

KLS7-SS32 - 2 2 F 03 - X X - X

- Part Number
- Slide Switch Type
- Pole
- Throw
- Operating Force
- Knobe Height
- Sequential No.

Travelling					
C	D	E	F	G	H
1.5	2.0	2.5	3.0	3.5	4.0
I	J	K	L	N	P
4.5	5.0	5.5	6.0	7.0	8.0

Knob Type

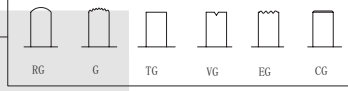

Slide Switch Series

KLS7-SS33-22F06 (2P2T) Slide Switch Series

SPECIFICATIONS

Rating: 0.5A 50VDC
Contact Resistance: 50MΩ max
Insulation Resistance:500VDC 100MΩ Min
Dielectric Strength:100V AC 1 Minute
Operating Force:100gf~800gf
Electrical Life :10,000 cycles



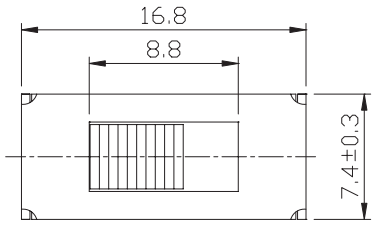

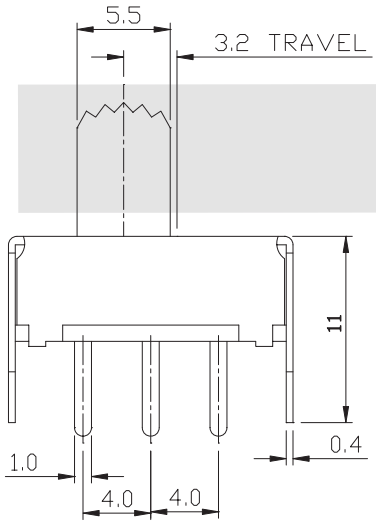

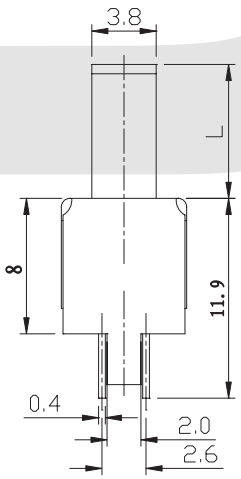

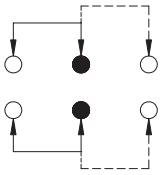

SCHEMATIC

ORDER INFORMATION

KLS7-SS33 - 2 2 F 06 - X X - X

Part Number
Slide Switch Type
Pole
Throw
Operating Force
Knobe Height
Sequential No.

Travelling					
C	D	E	F	G	H
1.5	2.0	2.5	3.0	3.5	4.0
I	J	K	L	N	P
4.5	5.0	5.5	6.0	7.0	8.0

Knob Type

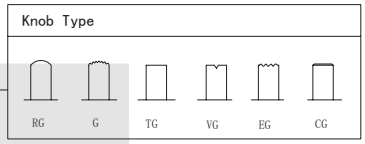

Slide Switch Series

KLS7-SS34-22G26 (2P2T) Slide Switch Series

SPECIFICATIONS

Rating: 0. 5A 50VDC
Contact Resistance: 30mΩ Max
Insulation Resistance:500VDC 100MΩ Min
Dielectric Strength:500V AC 1 Minute
Operating Force:100gf~800gf
Electrical Life :10,000 cycles



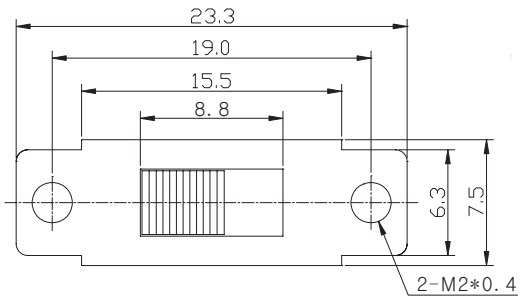

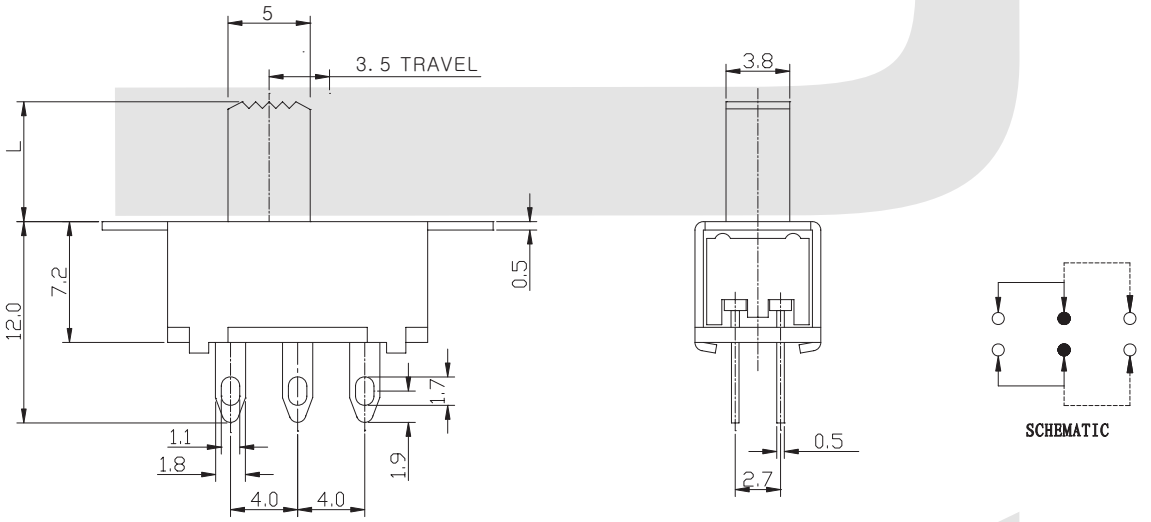

ORDER INFORMATION

KLS7-SS34 - 2 2 G 26 - X X - X

- Part Number
- Slide Switch Type
- Pole
- Throw
- Operating Force
- Knobe Height
- Sequential No.

Travelling					
C	D	E	F	G	H
1. 5	2. 0	2. 5	3. 0	3. 5	4. 0
I	J	K	L	N	P
4. 5	5. 0	5. 5	6. 0	7. 0	8. 0

Knob Type

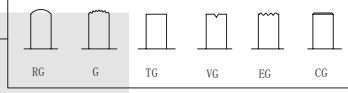

Slide Switch Series

KLS7-SS35-22G08 (2P2T) Slide Switch Series

SPECIFICATIONS

Rating: 3A 250VAC
Contact Resistance: 30mΩ Max
Insulation Resistance:500VDC 100MΩ Min
Dielectric Strength:500V AC 1 Minute
Operating Force:100gf~800gf
Electrical Life :10,000 cycles



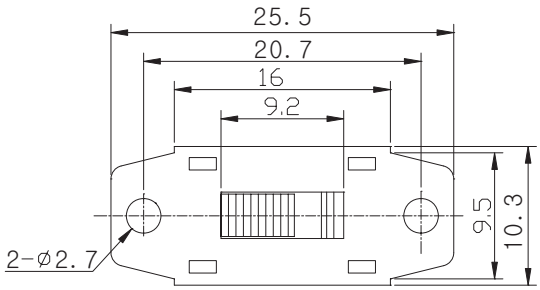

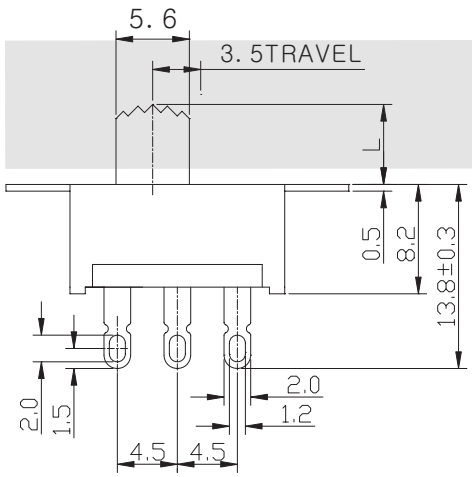

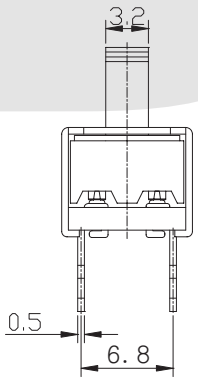

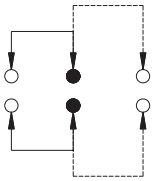

SCHEMATIC

ORDER INFORMATION

KLS7-SS35 - 2 2 G 08 - X X - X

- Part Number
- Slide Switch Type
- Pole
- Throw
- Operating Force
- Knobe Height
- Sequential No.

Travelling					
C	D	E	F	G	H
1.5	2.0	2.5	3.0	3.5	4.0
I	J	K	L	N	P
4.5	5.0	5.5	6.0	7.0	8.0

Knob Type

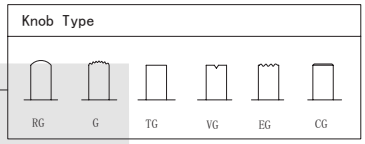

Slide Switch Series

KLS7-SS36-22H05 (2P2T) Slide Switch Series

SPECIFICATIONS

Rating: 0. 3A 50VDC
Contact Resistance: 30mΩ Max
Insulation Resistance:500VDC 100MΩ Min
Dielectric Strength:500V AC 1 Minute
Operating Force:100gf~800gf
Electrical Life :10,000 cycles



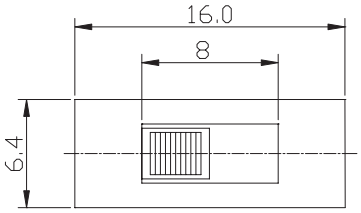

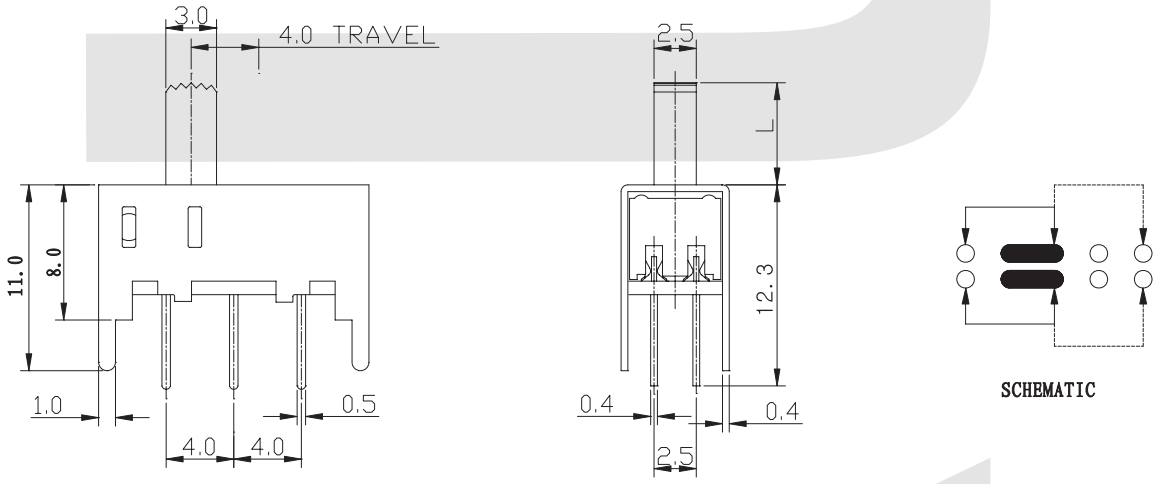

SCHEMATIC

ORDER INFORMATION

KLS7-SS36 - 2 2 H 05 - X X - X

- Part Number
- Slide Switch Type
- Pole
- Throw
- Operating Force
- Knobe Height
- Sequential No.

Travelling					
C	D	E	F	G	H
1.5	2.0	2.5	3.0	3.5	4.0
I	J	K	L	N	P
4.5	5.0	5.5	6.0	7.0	8.0

Knob Type

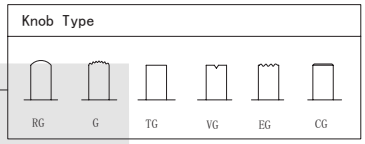

Slide Switch Series

KLS7-SS37-22H06 (2P2T) Slide Switch Series

SPECIFICATIONS

Rating: 0. 3A 50VDC
Contact Resistance: 30mΩ Max
Insulation Resistance:500VDC 100MΩ Min
Dielectric Strength:500V AC 1 Minute
Operating Force:100gf~800gf
Electrical Life :10,000 cycles



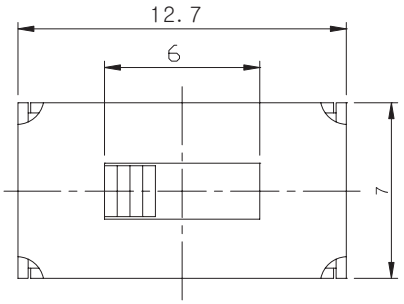

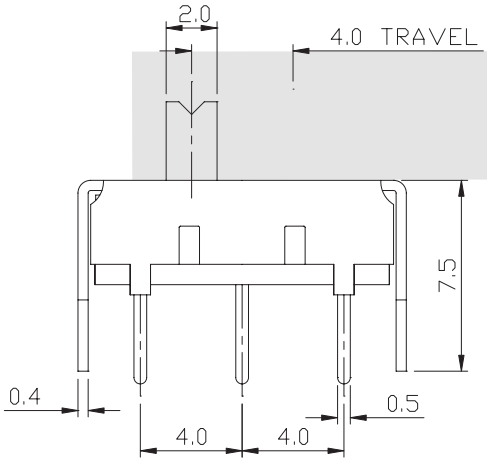

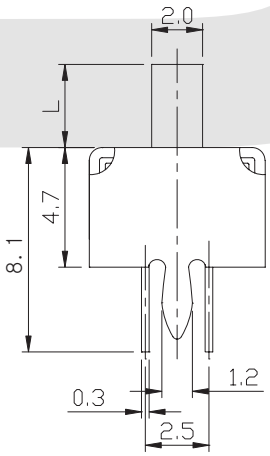

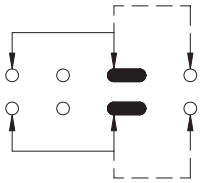

SCHEMATIC

ORDER INFORMATION

KLS7-SS37 - 2 2 H 06 - X X - X

- Part Number
- Slide Switch Type
- Pole
- Throw
- Operating Force
- Knobe Height
- Sequential No.

Travelling					
C	D	E	F	G	H
1. 5	2. 0	2. 5	3. 0	3. 5	4. 0
I	J	K	L	N	P
4. 5	5. 0	5. 5	6. 0	7. 0	8. 0

Knob Type

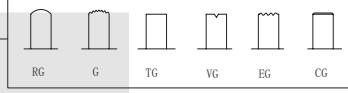

Slide Switch Series

KLS7-SS38-22J29 (2P2T) Slide Switch Series

SPECIFICATIONS

Rating: 1. 5A 250VAC
Contact Resistance: 30mΩ Max
Insulation Resistance:500VDC 100MΩ Min
Dielectric Strength:500V AC 1 Minute
Operating Force:200gf~600gf
Electrical Life :10,000 cycles



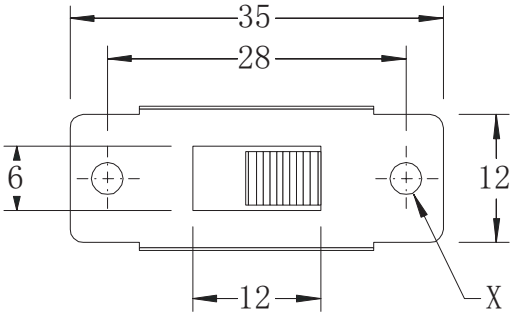

X : M3X0. 5/Ø3. 2
M3X0. 6/Ø4. 0

L : 0, 1, 2, 3, 4, 5, 6, 7, 8, 9, 10, 11, 12, 13 (mm.)

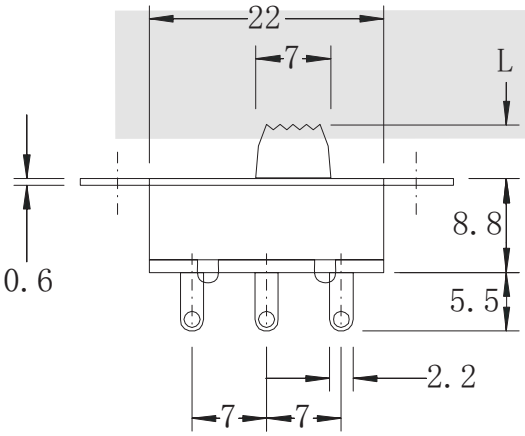

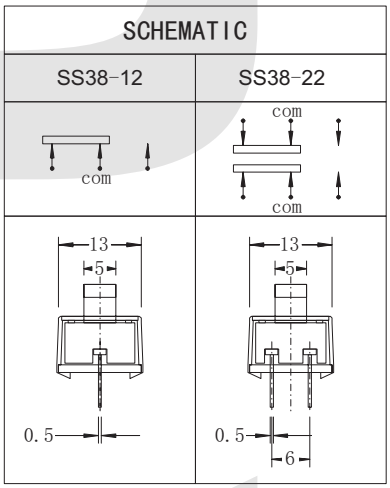

ORDER INFORMATION

KLS7-SS38 - 2 2 J 29 - X X - X

Part Number
Slide Switch Type
Pole
Throw
Operating Force
Knobe Height
Sequential No.

Travelling					
C	D	E	F	G	H
1. 5	2. 0	2. 5	3. 0	3. 5	4. 0
I	J	K	L	N	P
4. 5	5. 0	5. 5	6. 0	7. 0	8. 0

Knob Type

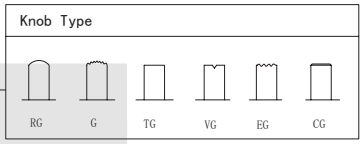

Slide Switch Series

KLS7-SS39-22N03 (2P2T) Slide Switch Series

SPECIFICATIONS

Rating: 6A 250VAC
Contact Resistance: 30mΩ Max
Insulation Resistance:500VDC 100MΩ Min
Dielectric Strength:500V AC 1 Minute
Operating Force:400gf~800gf
Electrical Life :10,000 cycles



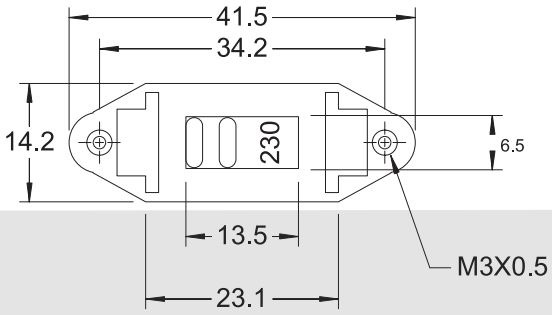

SCHEMATIC

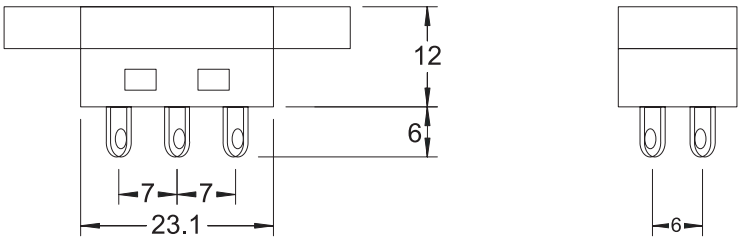

ORDER INFORMATION

KLS7-SS39 - 2 2 N 03 - X X - X

- Part Number
- Slide Switch Type
- Pole
- Throw
- Operating Force
- Knobe Height
- Sequential No.

Travelling					
C	D	E	F	G	H
1.5	2.0	2.5	3.0	3.5	4.0
I	J	K	L	N	P
4.5	5.0	5.5	6.0	7.0	8.0

Knob Type

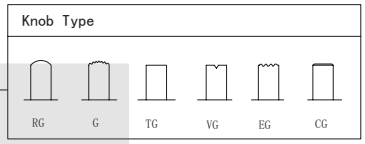

Slide Switch Series

KLS7-SS40-23D01 (2P3T) Slide Switch Series

SPECIFICATIONS

Rating: 0. 3A 50VDC
Contact Resistance: 30mΩ Max
Insulation Resistance:500VDC 100MΩ Min
Dielectric Strength:500V AC 1 Minute
Operating Force:100gf~800gf
Electrical Life :10,000 cycles



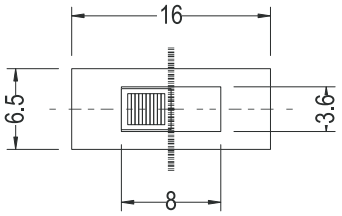

L=2 - 12

SCHEMATIC

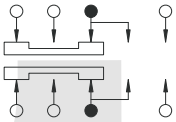

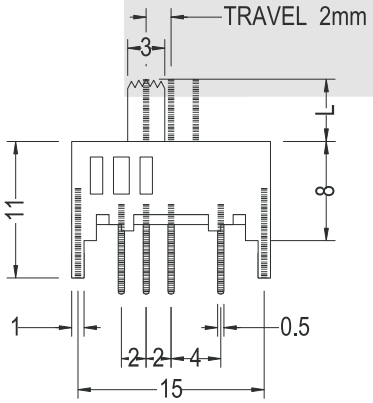

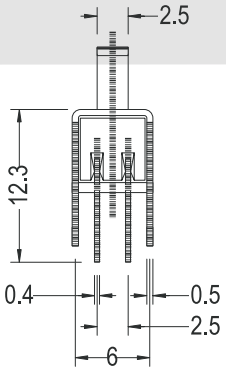

P.C.B. HOLE DETAIL

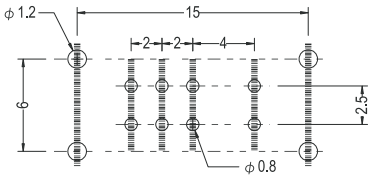

ORDER INFORMATION

KLS7-SS40 - 2 3 D 01 - X X - X

- Part Number
- Slide Switch Type
- Pole
- Throw
- Operating Force
- Knobe Height
- Sequential No.

Travelling					
C	D	E	F	G	H
1. 5	2. 0	2. 5	3. 0	3. 5	4. 0
I	J	K	L	N	P
4. 5	5. 0	5. 5	6. 0	7. 0	8. 0

Knob Type

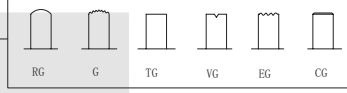

Slide Switch Series

KLS7-SS41-23D06 (2P3T) Slide Switch Series

SPECIFICATIONS

Rating: 0. 3A 50VDC
Contact Resistance: 30mΩ Max
Insulation Resistance:500VDC 100MΩ Min
Dielectric Strength:500V AC 1 Minute
Operating Force:100gf~800gf
Electrical Life :10,000 cycles



L=2 - 9

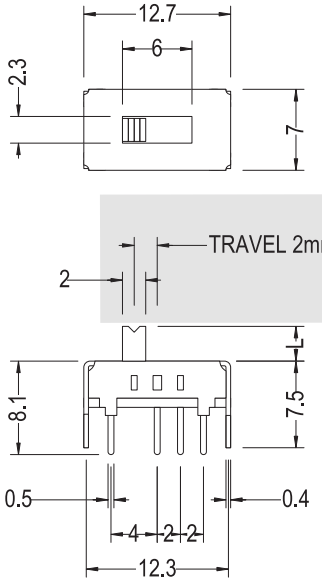

SCHEMATIC

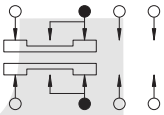

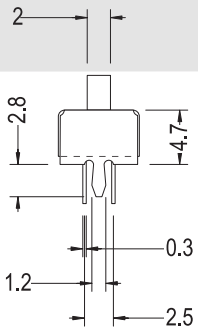

P.C.B. HOLE DETAIL

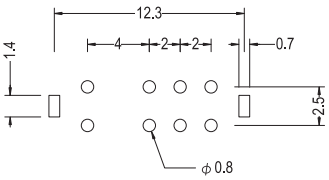

ORDER INFORMATION

KLS7-SS41 - 2 3 D 06 - X X - X

Part Number
Slide Switch Type
Pole
Throw

Travelling					
C	D	E	F	G	H
1.5	2.0	2.5	3.0	3.5	4.0
I	J	K	L	N	P
4.5	5.0	5.5	6.0	7.0	8.0

Operating Force
Knobe Height
Sequential No.

Knob Type

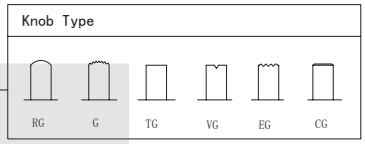

Slide Switch Series

KLS7-SS42-23D28 (2P3T) Slide Switch Series

SPECIFICATIONS

Rating: 0. 3A 50VDC
Contact Resistance: 30mΩ Max
Insulation Resistance:500VDC 100MΩ Min
Dielectric Strength:500V AC 1 Minute
Operating Force:100gf~800gf
Electrical Life :10,000 cycles



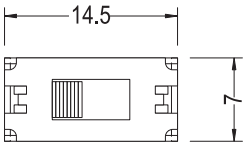

SCHEMATIC

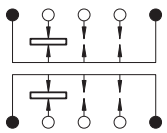

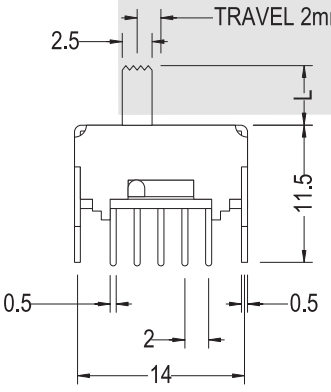

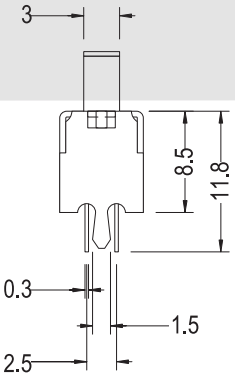

P.C.B. HOLE DETAIL

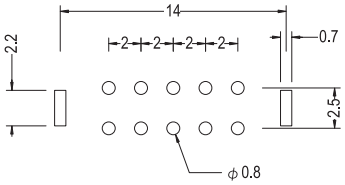

ORDER INFORMATION

KLS7-SS42 - 2 3 D 28 - X X - X

- Part Number
- Slide Switch Type
- Pole
- Throw
- Operating Force
- Knobe Height
- Sequential No.

Travelling					
C	D	E	F	G	H
1. 5	2. 0	2. 5	3. 0	3. 5	4. 0
I	J	K	L	N	P
4. 5	5. 0	5. 5	6. 0	7. 0	8. 0

Knob Type

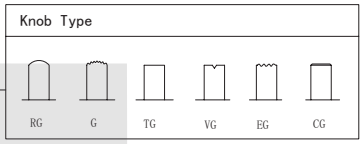

Slide Switch Series

KLS7-SS43-23E05 (2P3T) Slide Switch Series

SPECIFICATIONS

Rating: 0. 3A 50VDC
Contact Resistance: 30mΩ Max
Insulation Resistance:500VDC 100MΩ Min
Dielectric Strength:500V AC 1 Minute
Operating Force:100gf~800gf
Electrical Life :10,000 cycles



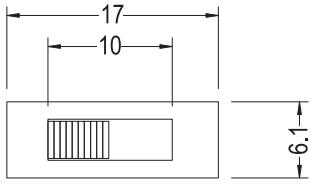

SCHEMATIC

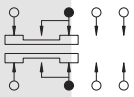

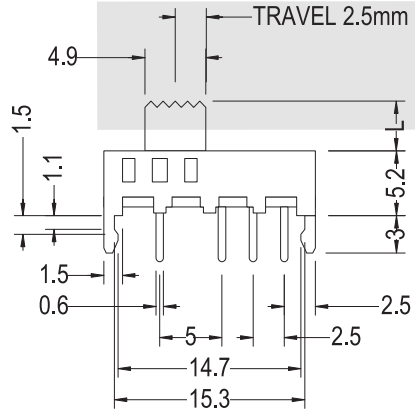

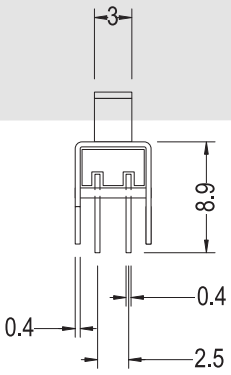

P.C.B. HOLE DETAIL

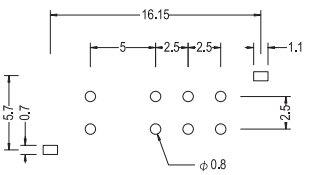

ORDER INFORMATION

KLS7-SS43 - 2 3 E 05 - X X - X

Part Number
Slide Switch Type
Pole
Throw

Travelling					
C	D	E	F	G	H
1. 5	2. 0	2. 5	3. 0	3. 5	4. 0
I	J	K	L	N	P
4. 5	5. 0	5. 5	6. 0	7. 0	8. 0

Operating Force
Knobe Height
Sequential No.

Knob Type

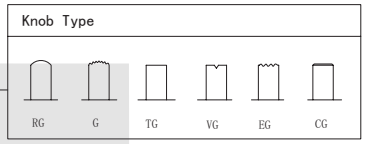

Slide Switch Series

KLS7-SS44-23E30 (2P3T) Slide Switch Series

SPECIFICATIONS

Rating: 1. 5A 250VAC
Contact Resistance: 30mΩ Max
Insulation Resistance:500VDC 100MΩ Min
Dielectric Strength:500V AC 1 Minute
Operating Force:100gf~800gf
Electrical Life :10,000 cycles



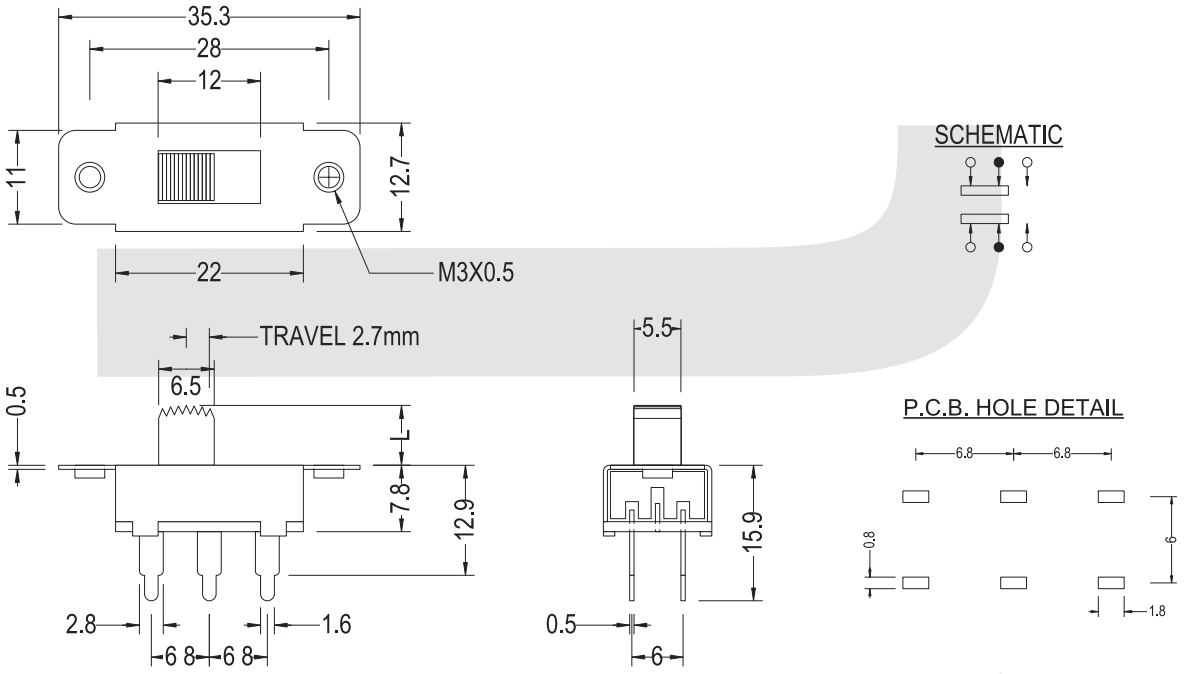

ORDER INFORMATION

KLS7-SS44 - 2 3 E 30 - X X - X

- Part Number
- Slide Switch Type
- Pole
- Throw
- Travelling

C	D	E	F	G	H
1. 5	2. 0	2. 5	3. 0	3. 5	4. 0
I	J	K	L	N	P
4. 5	5. 0	5. 5	6. 0	7. 0	8. 0

- Sequential No.
- Knobe Height
- Operating Force

Knob Type

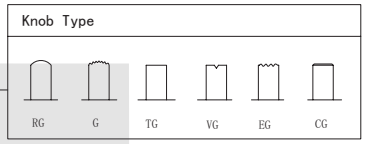

Slide Switch Series

KLS7-SS45-23F35 (2P3T) Slide Switch Series

SPECIFICATIONS

Rating: 0. 5A 50VDC
Contact Resistance: 30mΩ Max
Insulation Resistance:500VDC 100MΩ Min
Dielectric Strength:500V AC 1 Minute
Operating Force:100gf~800gf
Electrical Life :10,000 cycles



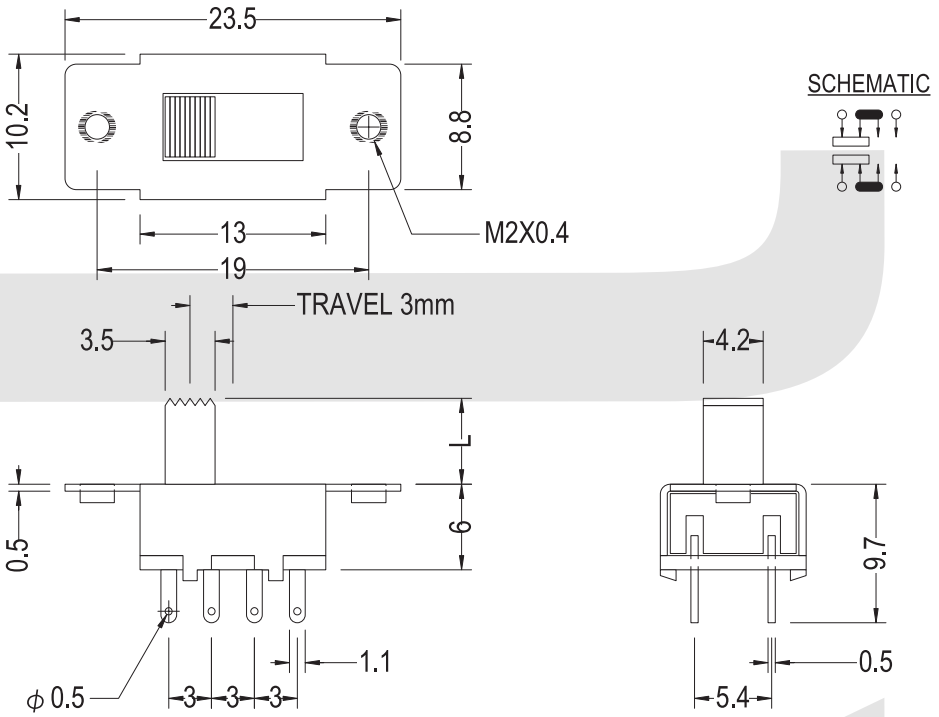

ORDER INFORMATION

KLS7-SS45 - 2 3 F 35 - X X - X

- Part Number
- Slide Switch Type
- Pole
- Throw
- Travelling
- Sequential No.
- Knobe Height
- Operating Force

Travelling					
C	D	E	F	G	H
1. 5	2. 0	2. 5	3. 0	3. 5	4. 0
I	J	K	L	N	P
4. 5	5. 0	5. 5	6. 0	7. 0	8. 0

Knob Type

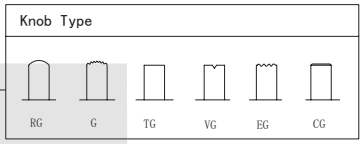

Slide Switch Series

KLS7-SS46-23H02 (2P3T) Slide Switch Series

SPECIFICATIONS

Rating: 0. 5A 50VDC
Contact Resistance: 30mΩ Max
Insulation Resistance:500VDC 100MΩ Min
Dielectric Strength:500V AC 1 Minute
Operating Force:100gf~800gf
Electrical Life :10,000 cycles



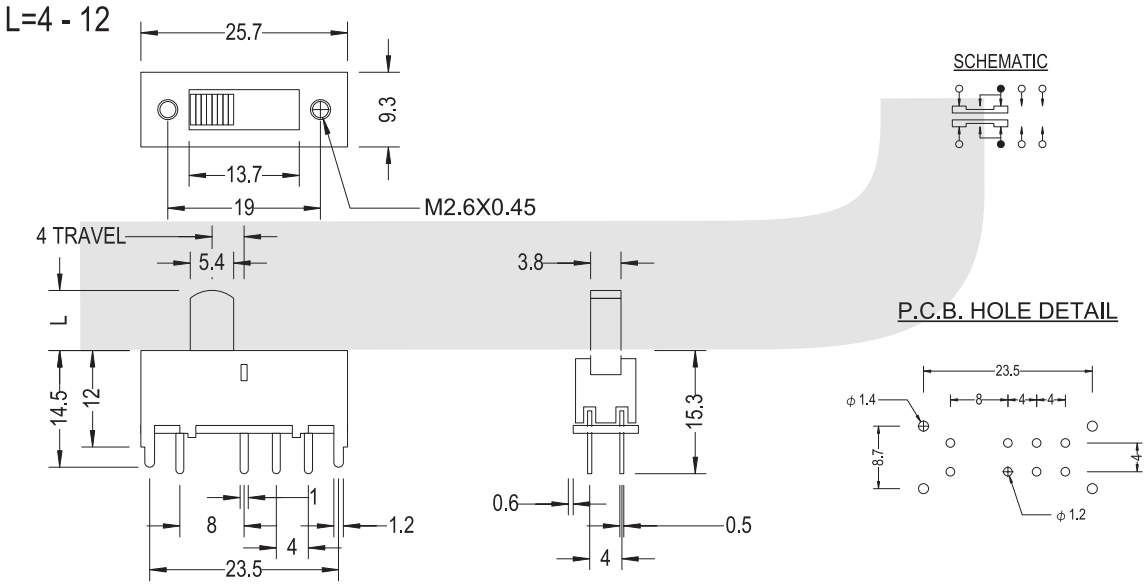

ORDER INFORMATION

KLS7-SS46 - 2 3 H 02 - X X - X

- Part Number
- Slide Switch Type
- Pole
- Throw

Travelling					
C	D	E	F	G	H
1. 5	2. 0	2. 5	3. 0	3. 5	4. 0
I	J	K	L	N	P
4. 5	5. 0	5. 5	6. 0	7. 0	8. 0

- Sequential No.
- Knobe Height
- Operating Force

Knob Type

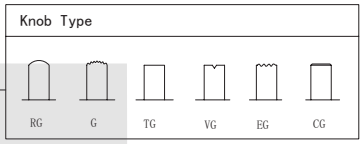

Slide Switch Series

KLS7-SS47-23L03 (2P3T) Slide Switch Series

VII

SPECIFICATIONS

Rating: 3A 250VAC
Contact Resistance: 30mΩ Max
Insulation Resistance:500VDC 100MΩ Min
Dielectric Strength:500V AC 1 Minute
Operating Force:100gf~800gf
Electrical Life :10,000 cycles



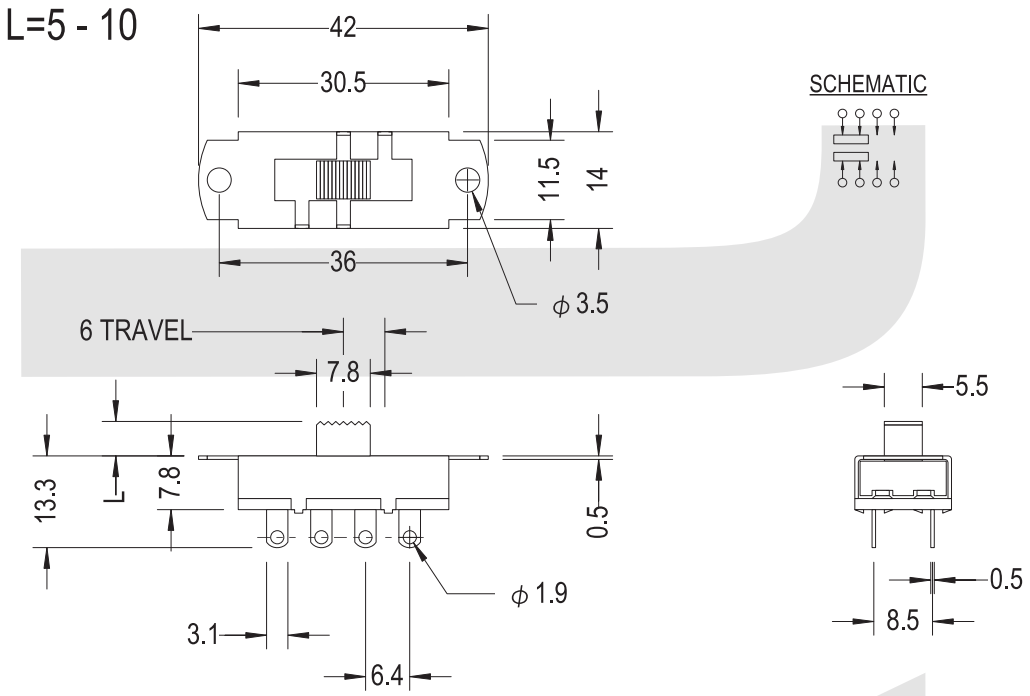

ORDER INFORMATION

KLS7-SS47 - 2 3 L 03 - X X - X

- Part Number
- Slide Switch Type
- Pole
- Throw
- Travelling
- Sequential No.
- Knobe Height
- Operating Force
- Knob Type

Travelling					
C	D	E	F	G	H
1.5	2.0	2.5	3.0	3.5	4.0
I	J	K	L	N	P
4.5	5.0	5.5	6.0	7.0	8.0

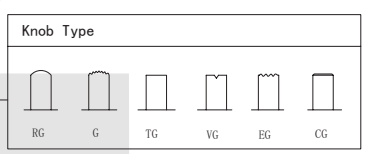

Slide Switch Series

KLS7-SK35-23D07 (2P3T) Slide Switch Series

SPECIFICATIONS

Rating: 0. 3A 50VDC
Contact Resistance: 30mΩ Max
Insulation Resistance:500VDC 100MΩ Min
Dielectric Strength:500V AC 1 Minute
Operating Force:100gf~800gf
Electrical Life :10,000 cycles



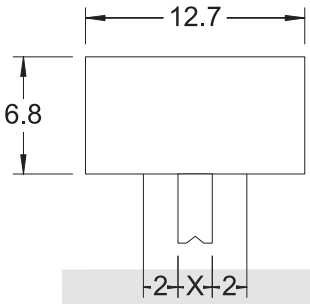

X: 2X2 or 3X3

L: 2,3,4,5,6

SCHEMATIC

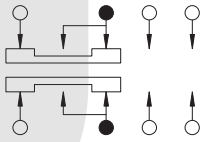

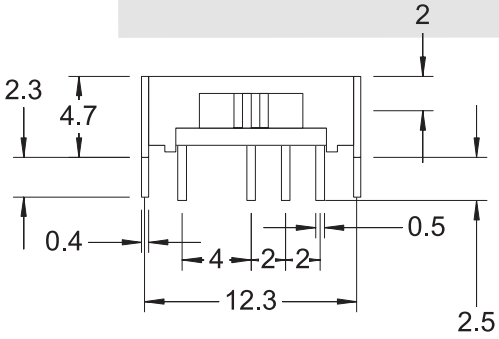

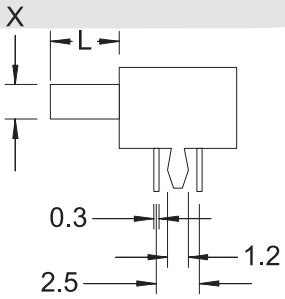

P.C.B. HOLE DETAIL

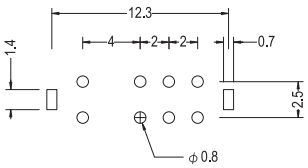

ORDER INFORMATION

KLS7-SK35 - 2 3 D 07 - X X - X

- Part Number
- Slide Switch Type
- Pole
- Throw
- Operating Force
- Knobe Height
- Sequential No.

Travelling					
C	D	E	F	G	H
1.5	2.0	2.5	3.0	3.5	4.0
I	J	K	L	N	P
4.5	5.0	5.5	6.0	7.0	8.0

Knob Type

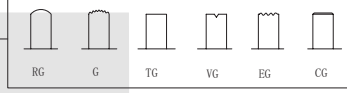

Slide Switch Series

KLS7-SS60-24D02 (2P4T) Slide Switch Series

SPECIFICATIONS

Rating: 0. 3A 50VDC
Contact Resistance: 30mΩ Max
Insulation Resistance:500VDC 100MΩ Min
Dielectric Strength:500V AC 1 Minute
Operating Force:100gf~800gf
Electrical Life :10,000 cycles



L=2 - 6

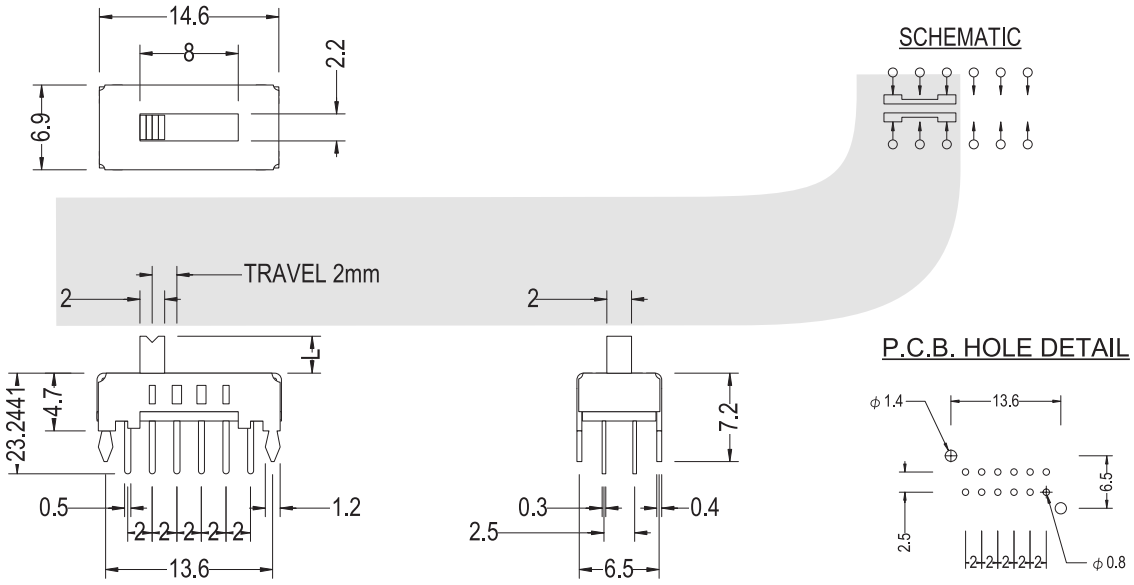

ORDER INFORMATION

KLS7-SS60 - 2 4 D 02 - X X - X

Part Number
Slide Switch Type
Pole
Throw
Operating Force
Knobe Height
Sequential No.

Travelling					
C	D	E	F	G	H
1. 5	2. 0	2. 5	3. 0	3. 5	4. 0
I	J	K	L	N	P
4. 5	5. 0	5. 5	6. 0	7. 0	8. 0

Knob Type

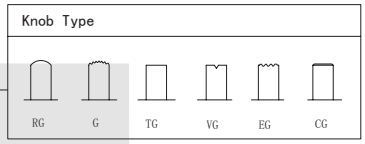

Slide Switch Series

KLS7-SS62-24H03 (2P4T) Slide Switch Series

SPECIFICATIONS

Rating: 0. 5A 50VDC
Contact Resistance: 30mΩ Max
Insulation Resistance:500VDC 100MΩ Min
Dielectric Strength:500V AC 1 Minute
Operating Force:100gf~800gf
Electrical Life :10,000 cycles



L=4 - 12

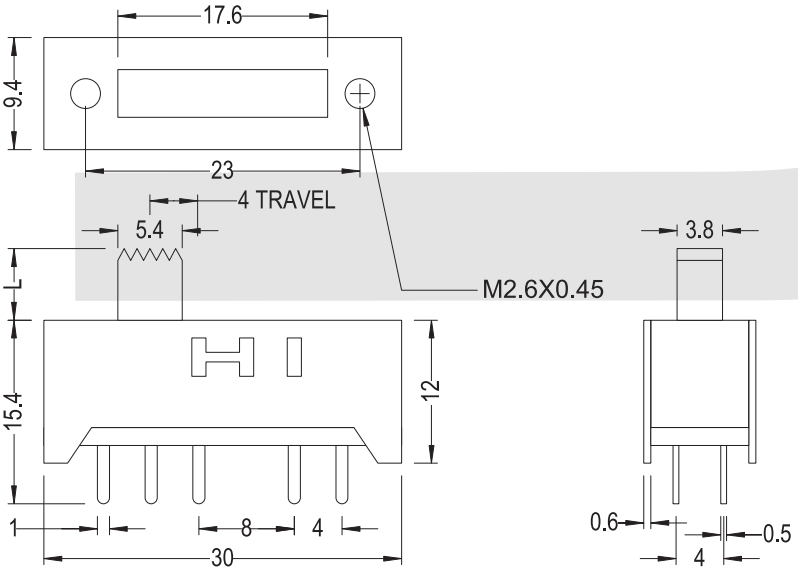

SCHEMATIC

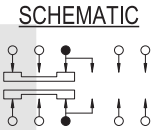

P.C.B. HOLE DETAIL

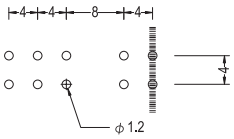

ORDER INFORMATION

KLS7-SS62 - 2 4 H 03 - X X - X

Part Number
Slide Switch Type
Pole
Throw

Travelling					
C	D	E	F	G	H
1. 5	2. 0	2. 5	3. 0	3. 5	4. 0
I	J	K	L	N	P
4. 5	5. 0	5. 5	6. 0	7. 0	8. 0

Operating Force
Knobe Height
Sequential No.

Knob Type

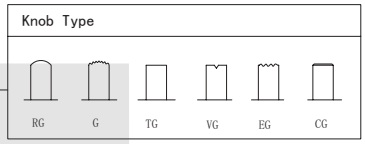

Slide Switch Series

KLS7-SS63-24N01 (2P4T) Slide Switch Series

SPECIFICATIONS

Rating: 3A 250VAC
Contact Resistance: 30mΩ Max
Insulation Resistance:500VDC 100MΩ Min
Dielectric Strength:500V AC 1 Minute
Operating Force:100gf~800gf
Electrical Life :10,000 cycles



L=5 - 10

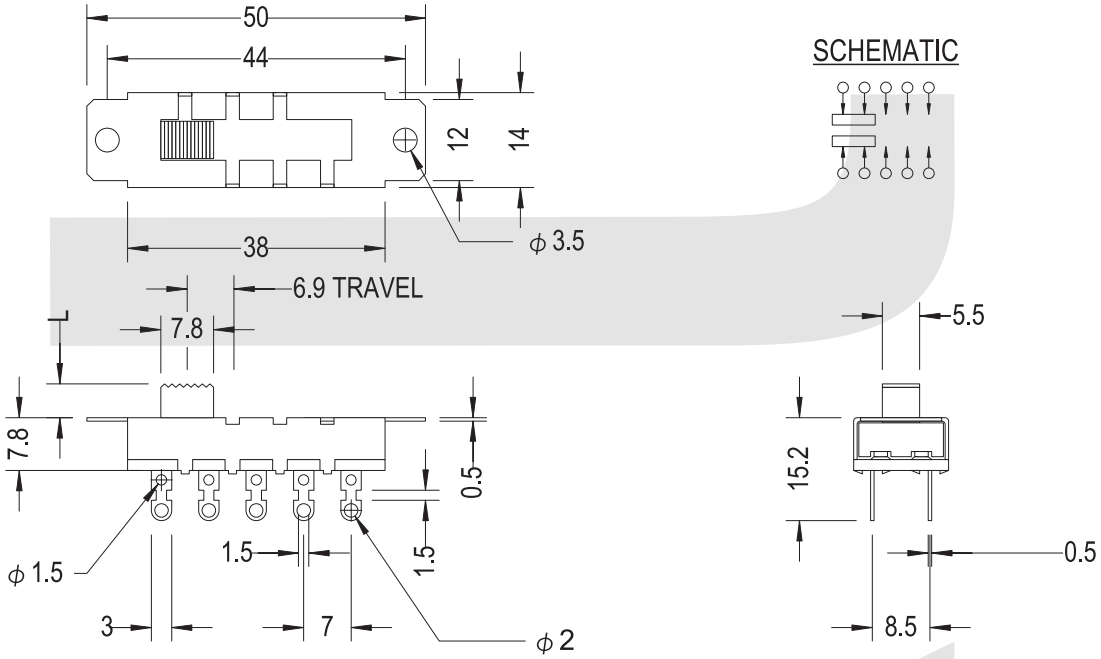

ORDER INFORMATION

KLS7-SS63 - 2 4 N 01 - X X - X

Part Number
Slide Switch Type
Pole
Throw
Operating Force
Knobe Height
Sequential No.

Travelling					
C	D	E	F	G	H
1.5	2.0	2.5	3.0	3.5	4.0
I	J	K	L	N	P
4.5	5.0	5.5	6.0	7.0	8.0

Knob Type

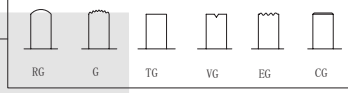

Slide Switch Series

KLS7-SS61-24E01 (2P4T) Slide Switch Series

SPECIFICATIONS

Rating: 0. 3A 50VDC
Contact Resistance: 30mΩ Max
Insulation Resistance:500VDC 100MΩ Min
Dielectric Strength:500V AC 1 Minute
Operating Force:100gf~800gf
Electrical Life :10,000 cycles



L=3 - 11

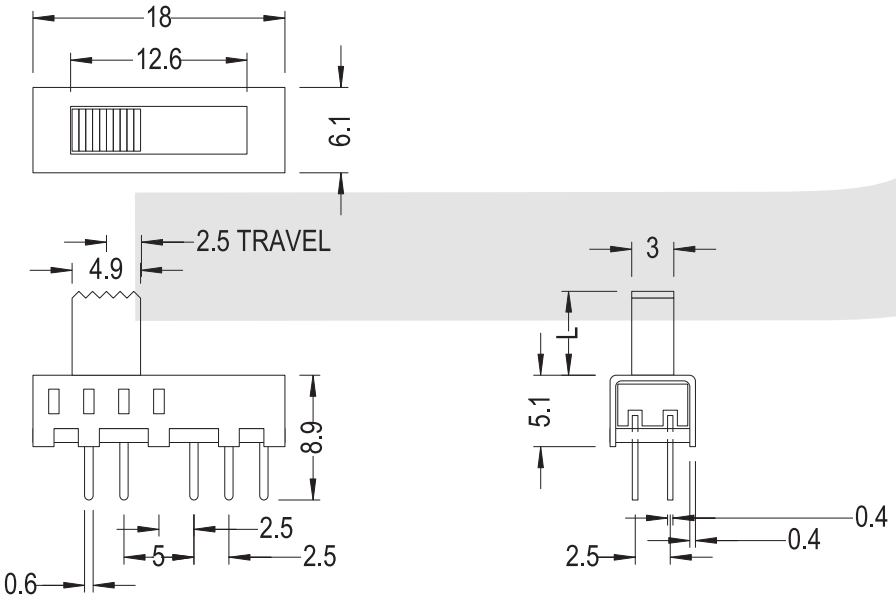

SCHEMATIC

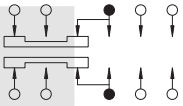

P.C.B. HOLE DETAIL

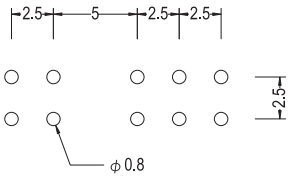

ORDER INFORMATION

KLS7-SS61 - 2 4 E 01 - X X - X

Part Number
Slide Switch Type
Pole
Throw

Travelling					
C	D	E	F	G	H
1.5	2.0	2.5	3.0	3.5	4.0
I	J	K	L	N	P
4.5	5.0	5.5	6.0	7.0	8.0

Operating Force
Knobe Height
Sequential No.

Knob Type

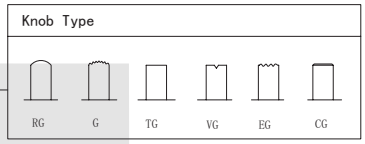

Slide Switch Series

KLS7-SK36-24D02 (2P4T) Slide Switch Series

VII

SPECIFICATIONS

Rating: 0. 3A 50VDC
Contact Resistance: 30mΩ Max
Insulation Resistance:500VDC 100MΩ Min
Dielectric Strength:500V AC 1 Minute
Operating Force:100gf~800gf
Electrical Life :10,000 cycles

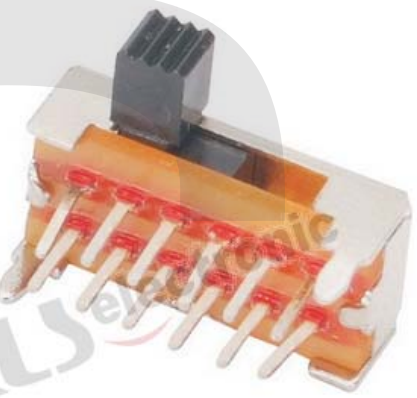

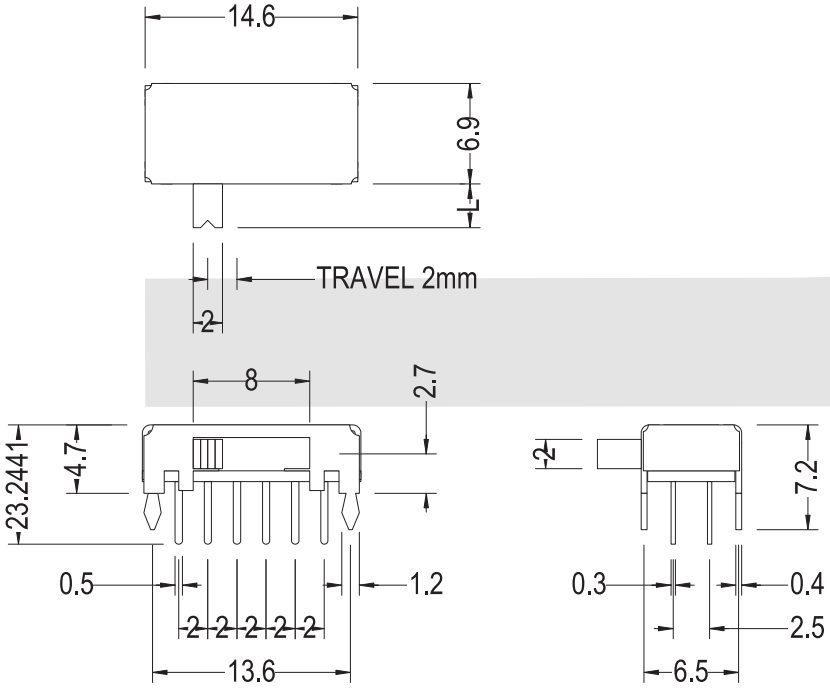

SCHEMATIC

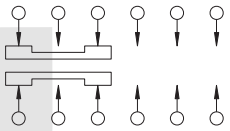

P.C.B. HOLE DETAIL

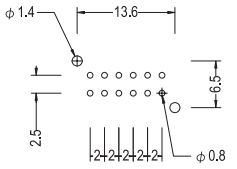

ORDER INFORMATION

KLS7-SK36 - 2 4 D 02 - X X - X

- Part Number
- Slide Switch Type
- Pole
- Throw
- Operating Force
- Knobe Height
- Sequential No.

Travelling					
C	D	E	F	G	H
1. 5	2. 0	2. 5	3. 0	3. 5	4. 0
I	J	K	L	N	P
4. 5	5. 0	5. 5	6. 0	7. 0	8. 0

Knob Type

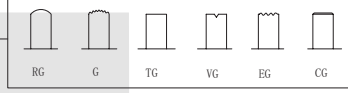

Slide Switch Series

KLS7-SK37-24F01 (2P4T) Slide Switch Series

VII

SPECIFICATIONS

Rating: 0. 3A 50VDC
Contact Resistance: 30mΩ Max
Insulation Resistance:500VDC 100MΩ Min
Dielectric Strength:500V AC 1 Minute
Operating Force:100gf~800gf
Electrical Life :10,000 cycles



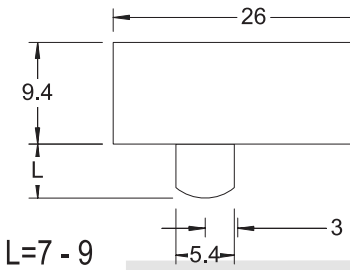

SCHEMATIC

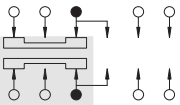

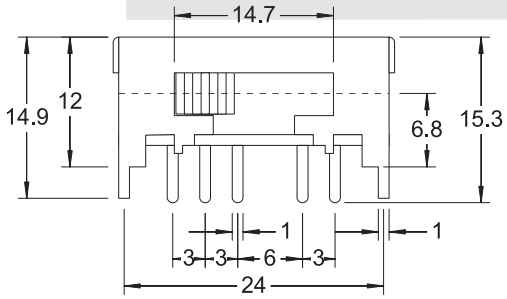

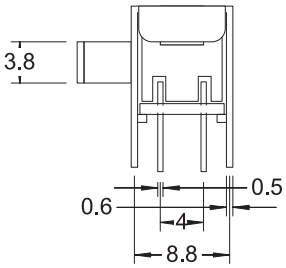

P.C.B. HOLE DETAIL

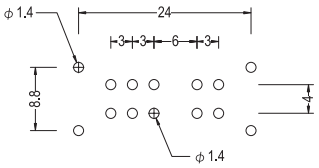

ORDER INFORMATION

KLS7-SK37 - 2 4 F 01 - X X - X

- Part Number
- Slide Switch Type
- Pole
- Throw
- Operating Force
- Knobe Height
- Sequential No.

Travelling					
C	D	E	F	G	H
1. 5	2. 0	2. 5	3. 0	3. 5	4. 0
I	J	K	L	N	P
4. 5	5. 0	5. 5	6. 0	7. 0	8. 0

Knob Type

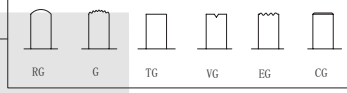

Slide Switch Series

KLS7-SS64-25F02 (2P5T) Slide Switch Series

SPECIFICATIONS

Rating: 0. 3A 50VDC
Contact Resistance: 30mΩ Max
Insulation Resistance:500VDC 100MΩ Min
Dielectric Strength:500V AC 1 Minute
Operating Force:100gf~800gf
Electrical Life :10,000 cycles



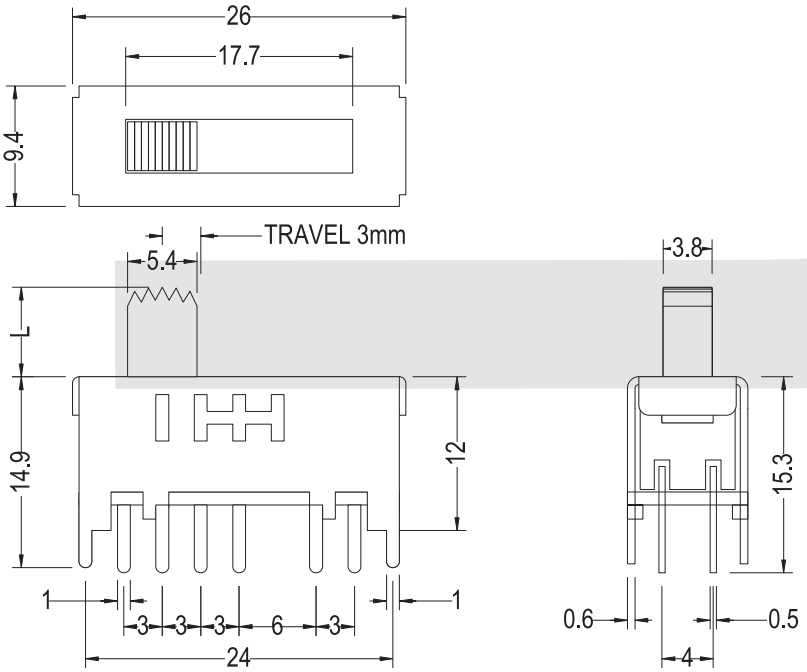

SCHEMATIC

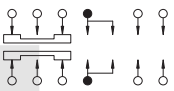

P.C.B. HOLE DETAIL

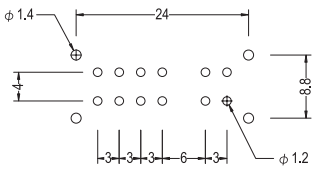

ORDER INFORMATION

KLS7-SS64 - 2 5 F 02 - X X - X

- Part Number
- Slide Switch Type
- Pole
- Throw

Travelling					
C	D	E	F	G	H
1. 5	2. 0	2. 5	3. 0	3. 5	4. 0
I	J	K	L	N	P
4. 5	5. 0	5. 5	6. 0	7. 0	8. 0

- Operating Force
- Knobe Height
- Sequential No.

Knob Type

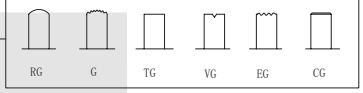

Slide Switch Series

KLS7-SS65-26D02 (2P5T) Slide Switch Series

SPECIFICATIONS

Rating: 0. 3A 50VDC
Contact Resistance: 30mΩ Max
Insulation Resistance:500VDC 100MΩ Min
Dielectric Strength:500V AC 1 Minute
Operating Force:100gf~800gf
Electrical Life :10,000 cycles



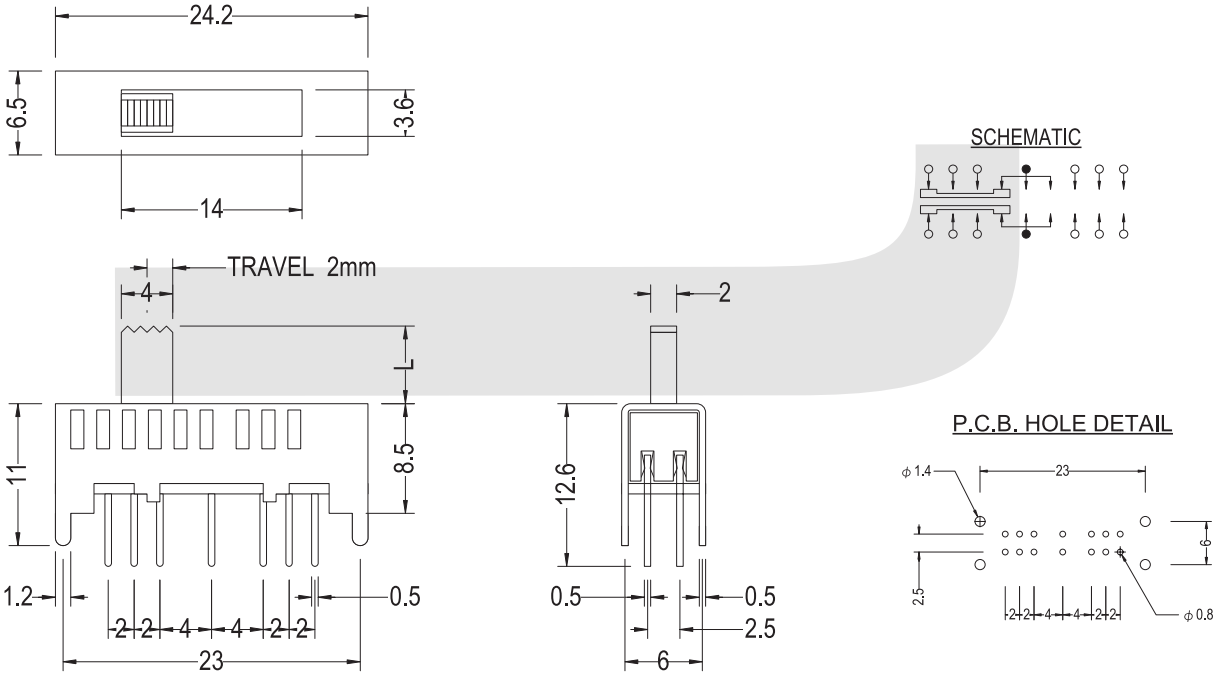

ORDER INFORMATION

KLS7-SS65 - 2 6 D 02 - X X - X

- Part Number
- Slide Switch Type
- Pole
- Throw
- Operating Force
- Knobe Height
- Sequential No.

Travelling					
C	D	E	F	G	H
1.5	2.0	2.5	3.0	3.5	4.0
I	J	K	L	N	P
4.5	5.0	5.5	6.0	7.0	8.0

Knob Type

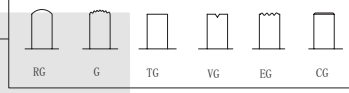

Slide Switch Series

KLS7-SS70-32H01 (3P2T) Slide Switch Series

SPECIFICATIONS

Rating: 0. 5A 50VDC
Contact Resistance: 30mΩ Max
Insulation Resistance:500VDC 100MΩ Min
Dielectric Strength:500V AC 1 Minute
Operating Force:100gf~800gf
Electrical Life :10,000 cycles



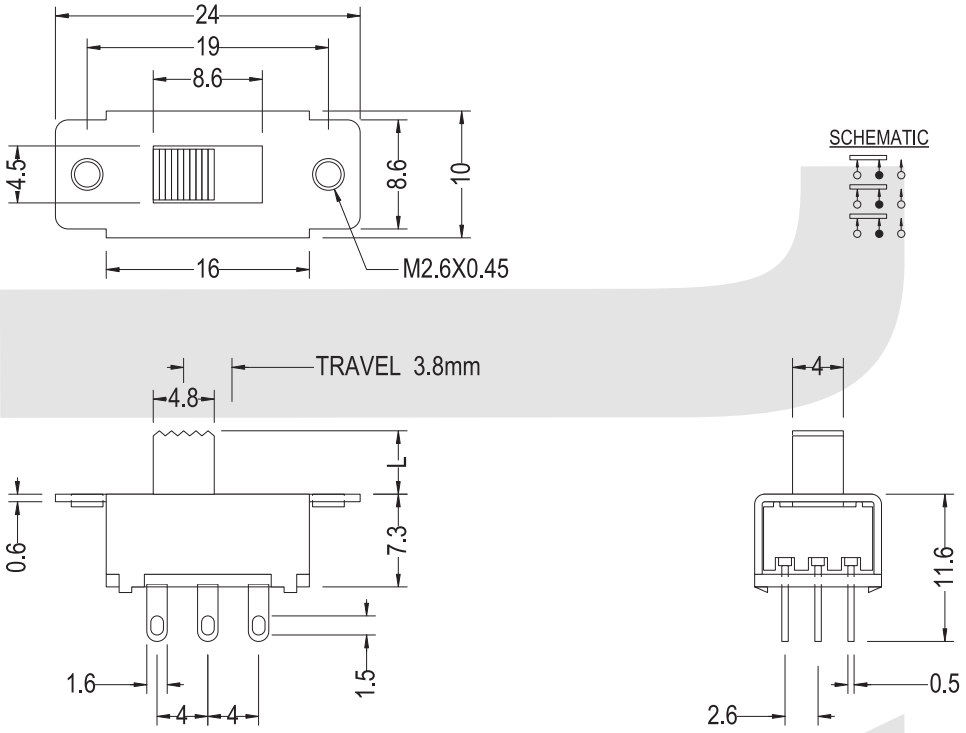

ORDER INFORMATION

KLS7-SS70 - 3 2 H 01 - X X - X

- Part Number
- Slide Switch Type
- Pole
- Throw

Travelling					
C	D	E	F	G	H
1. 5	2. 0	2. 5	3. 0	3. 5	4. 0
I	J	K	L	N	P
4. 5	5. 0	5. 5	6. 0	7. 0	8. 0

- Operating Force
- Knobe Height
- Sequential No.

Knob Type

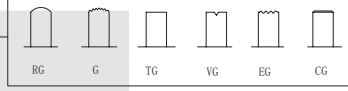

Slide Switch Series

KLS7-SS71-42D02 (4P2T) Slide Switch Series

SPECIFICATIONS

Rating: 0. 3A 50VDC
Contact Resistance: 30mΩ Max
Insulation Resistance:500VDC 100MΩ Min
Dielectric Strength:500V AC 1 Minute
Operating Force:100gf~800gf
Electrical Life :10,000 cycles



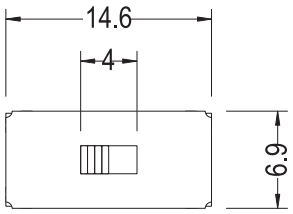

SCHEMATIC

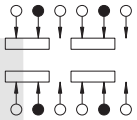

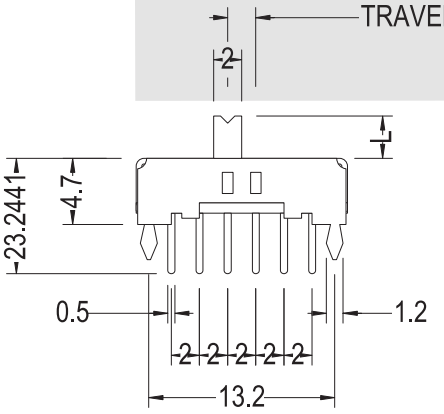

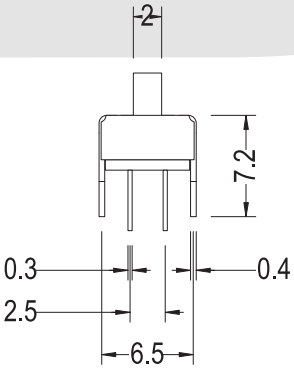

P.C.B. HOLE DETAIL

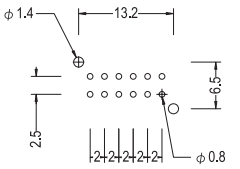

ORDER INFORMATION

KLS7-SS71 - 4 2 D 02 - X X - X

- Part Number
- Slide Switch Type
- Pole
- Throw
- Operating Force
- Knobe Height
- Sequential No.

Travelling					
C	D	E	F	G	H
1.5	2.0	2.5	3.0	3.5	4.0
I	J	K	L	N	P
4.5	5.0	5.5	6.0	7.0	8.0

Knob Type

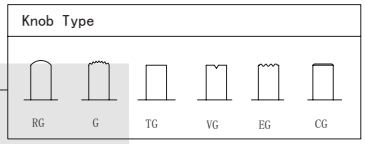

Slide Switch Series

KLS7-SS72-42H03 (4P2T) Slide Switch Series

SPECIFICATIONS

Rating: 0. 5A 50VDC
Contact Resistance: 30mΩ Max
Insulation Resistance:500VDC 100MΩ Min
Dielectric Strength:500V AC 1 Minute
Operating Force:100gf~800gf
Electrical Life :10,000 cycles



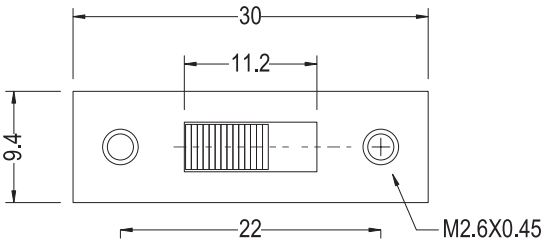

SCHEMATIC

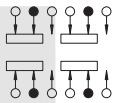

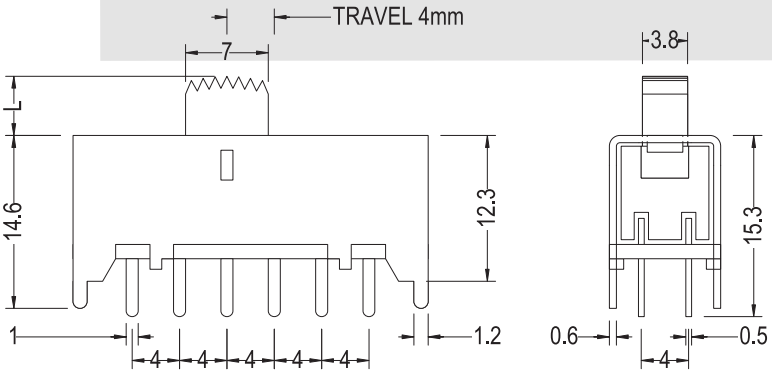

P.C.B. HOLE DETAIL

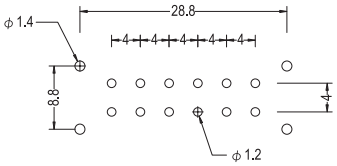

ORDER INFORMATION

KLS7-SS72 - 4 2 H 03 - X X - X

Part Number
Slide Switch Type
Pole
Throw
Operating Force
Knobe Height
Sequential No.

Travelling					
C	D	E	F	G	H
1.5	2.0	2.5	3.0	3.5	4.0
I	J	K	L	N	P
4.5	5.0	5.5	6.0	7.0	8.0

Knob Type

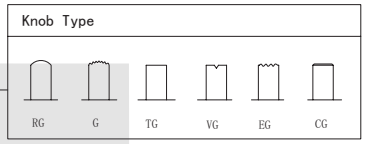

Slide Switch Series

KLS7-SS73-42H08 (4P2T) Slide Switch Series

SPECIFICATIONS

Rating: 0. 3A 50VDC
Contact Resistance: 30mΩ Max
Insulation Resistance:500VDC 100MΩ Min
Dielectric Strength:500V AC 1 Minute
Operating Force:100gf~800gf
Electrical Life :10,000 cycles



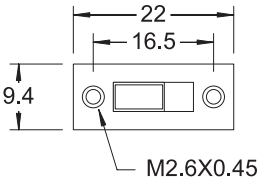

SCHEMATIC

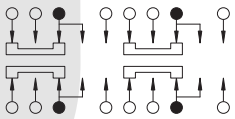

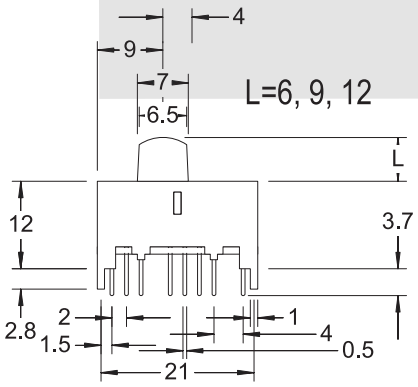

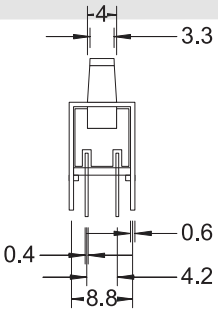

P.C.B. HOLE DETAIL

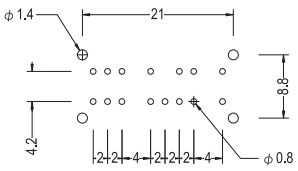

ORDER INFORMATION

KLS7-SS73 - 4 2 H 08 - X X - X

- Part Number
- Slide Switch Type
- Pole
- Throw
- Operating Force
- Knobe Height
- Sequential No.

Travelling					
C	D	E	F	G	H
1.5	2.0	2.5	3.0	3.5	4.0
I	J	K	L	N	P
4.5	5.0	5.5	6.0	7.0	8.0

Knob Type

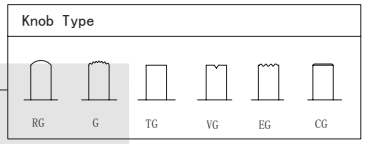

Slide Switch Series

KLS7-SK37-42D01 (4P2T) Slide Switch Series

SPECIFICATIONS

Rating: 0. 3A 50VDC
Contact Resistance: 30mΩ Max
Insulation Resistance:500VDC 100MΩ Min
Dielectric Strength:500V AC 1 Minute
Operating Force:100gf~800gf
Electrical Life :10,000 cycles

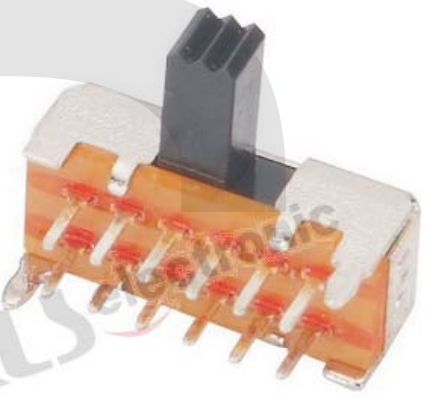

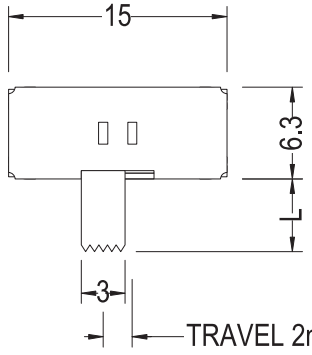

SCHEMATIC

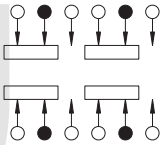

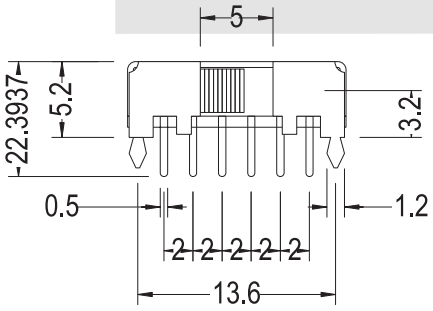

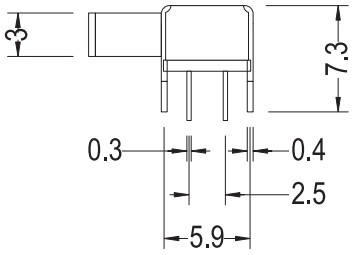

P.C.B. HOLE DETAIL

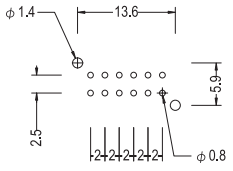

ORDER INFORMATION

KLS7-SK37 - 4 2 D 01 - X X - X

- Part Number
- Slide Switch Type
- Pole
- Throw
- Operating Force
- Knobe Height
- Sequential No.

Travelling					
C	D	E	F	G	H
1. 5	2. 0	2. 5	3. 0	3. 5	4. 0
I	J	K	L	N	P
4. 5	5. 0	5. 5	6. 0	7. 0	8. 0

Knob Type

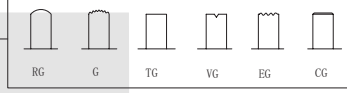

Slide Switch Series

KLS7-SK50-42H03 (4P2T) Slide Switch Series

SPECIFICATIONS

Rating: 0. 3A 50VDC
Contact Resistance: 30mΩ Max
Insulation Resistance:500VDC 100MΩ Min
Dielectric Strength:500V AC 1 Minute
Operating Force:100gf~800gf
Electrical Life :10,000 cycles

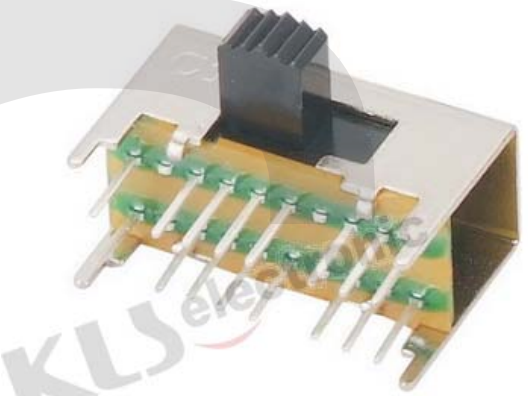

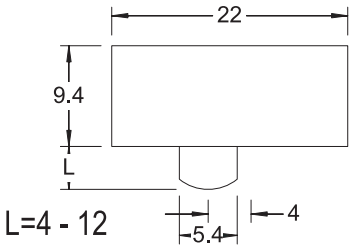

SCHEMATIC

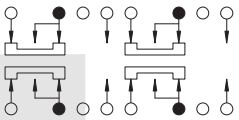

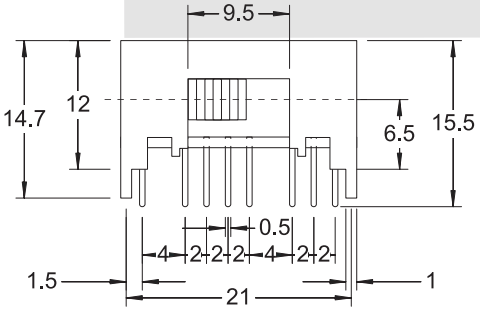

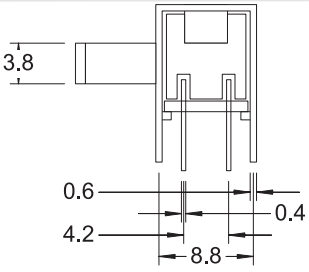

P.C.B. HOLE DETAIL

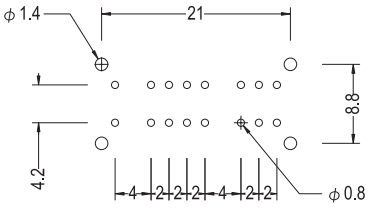

ORDER INFORMATION

KLS7-SK50 - 4 2 H 03 - X X - X

- Part Number
- Slide Switch Type
- Pole
- Throw
- Operating Force
- Knobe Height
- Sequential No.

Travelling					
C	D	E	F	G	H
1. 5	2. 0	2. 5	3. 0	3. 5	4. 0
I	J	K	L	N	P
4. 5	5. 0	5. 5	6. 0	7. 0	8. 0

Knob Type

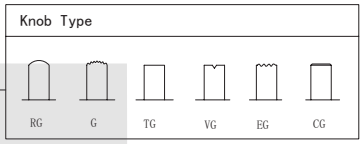

DIP Switch Series

KLS7-SS74-44D04 (4P4T)



0.5A 50V DC

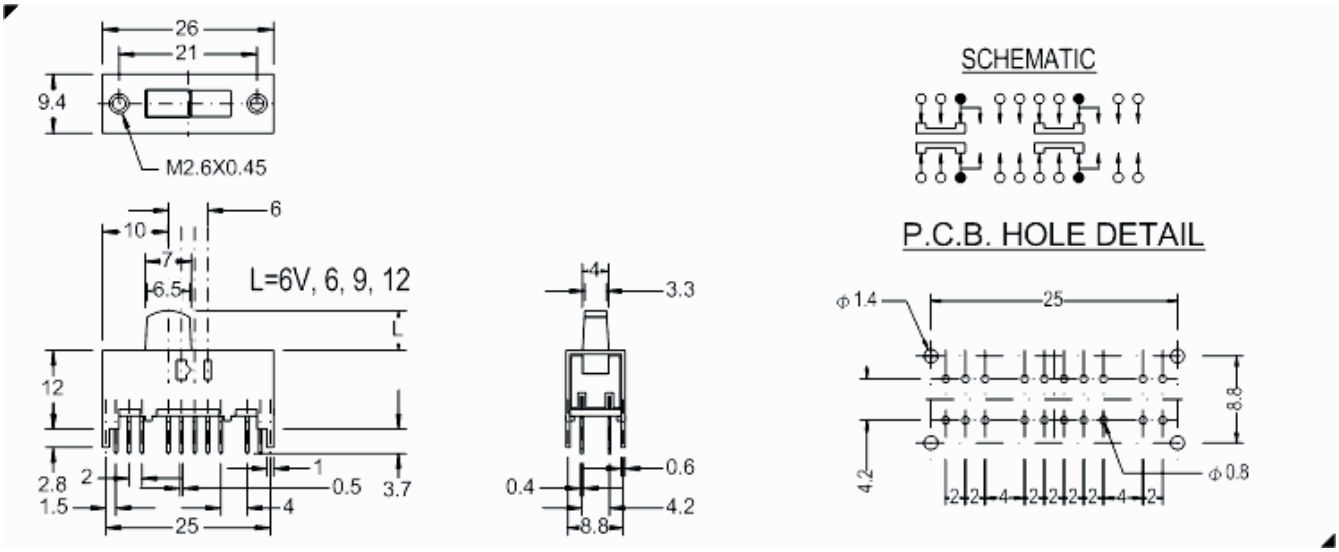

ORDER INFORMATION

Slide Switch Series

KLS7-SS75-48D01 (4P8T) Slide Switch Series

VII

SPECIFICATIONS

Rating: 0. 5A 50VDC
Contact Resistance: 30mΩ Max
Insulation Resistance:500VDC 100MΩ Min
Dielectric Strength:500V AC 1 Minute
Operating Force:100gf~800gf
Electrical Life :10,000 cycles



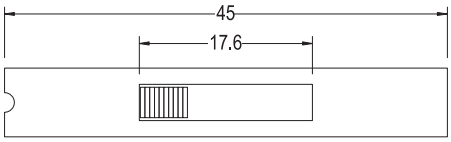

SCHEMATIC

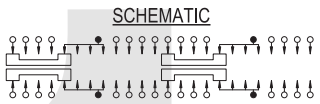

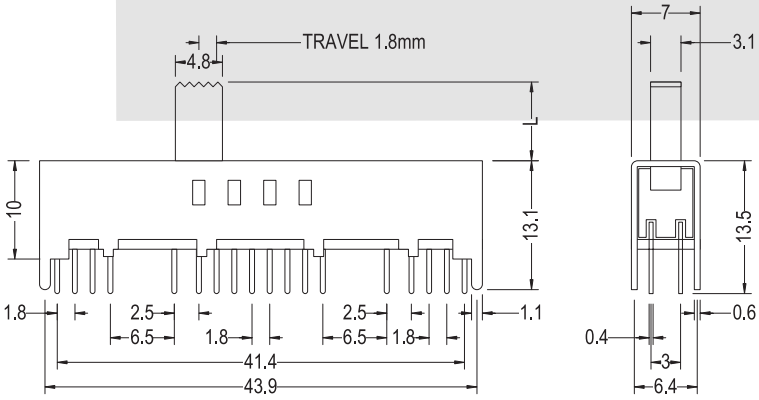

P.C.B. HOLE DETAIL

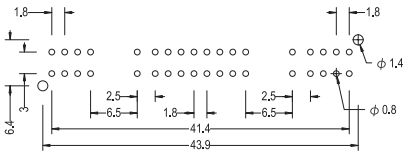

ORDER INFORMATION

KLS7-SS75 - 4 8 D 01 - X X - X

- Part Number
- Slide Switch Type
- Pole
- Throw
- Operating Force
- Knobe Height
- Sequential No.

Travelling					
C	D	E	F	G	H
1. 5	2. 0	2. 5	3. 0	3. 5	4. 0
I	J	K	L	N	P
4. 5	5. 0	5. 5	6. 0	7. 0	8. 0

Knob Type

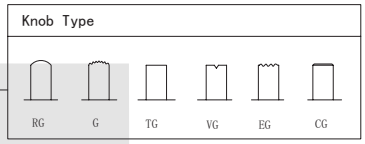

Slide Switch Series

KLS7-SS76-62H01 (6P2T) Slide Switch Series

SPECIFICATIONS

Rating: 0. 5A 50VDC
Contact Resistance: 30mΩ Max
Insulation Resistance:500VDC 100MΩ Min
Dielectric Strength:500V AC 1 Minute
Operating Force:100gf~800gf
Electrical Life :10,000 cycles



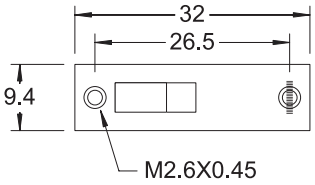

SCHEMATIC

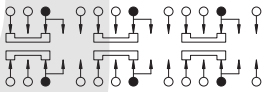

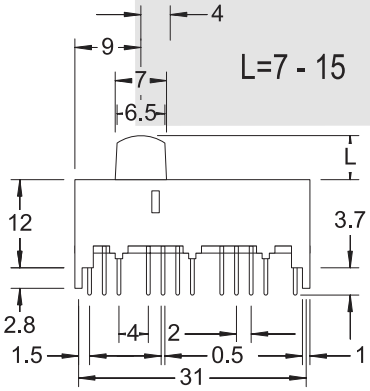

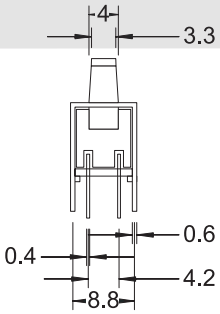

P.C.B. HOLE DETAIL

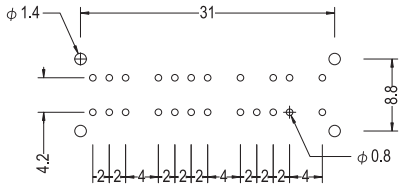

ORDER INFORMATION

KLS7-SS76 - 6 2 H 01 - X X - X

Part Number
Slide Switch Type
Pole
Throw

Travelling					
C	D	E	F	G	H
1. 5	2. 0	2. 5	3. 0	3. 5	4. 0
I	J	K	L	N	P
4. 5	5. 0	5. 5	6. 0	7. 0	8. 0

Operating Force
Knobe Height
Sequential No.

Knob Type

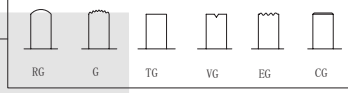

Slide Switch Series

KLS7-SK51-62H01 (6P2T) Slide Switch Series

VII

SPECIFICATIONS

Rating: 0. 5A 50VDC
Contact Resistance: 30mΩ Max
Insulation Resistance:500VDC 100MΩ Min
Dielectric Strength:500V AC 1 Minute
Operating Force:100gf~800gf
Electrical Life :10,000 cycles

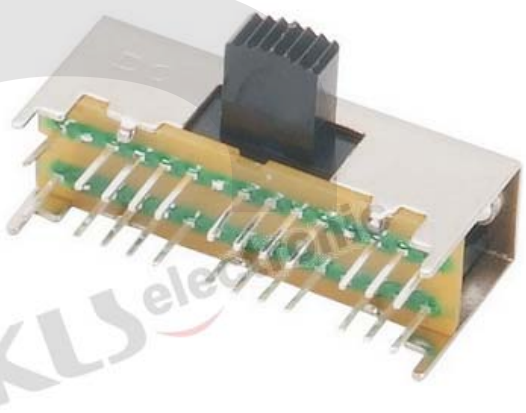

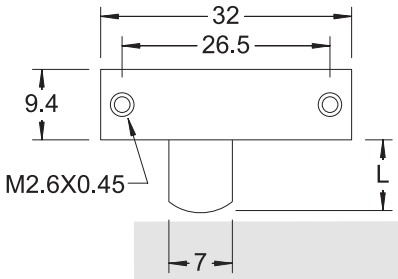

L=7 - 12

SCHEMATIC

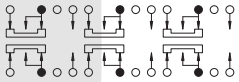

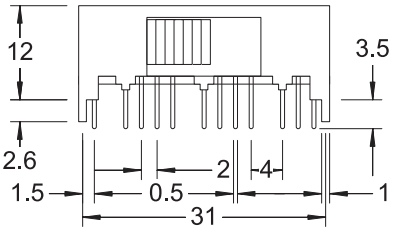

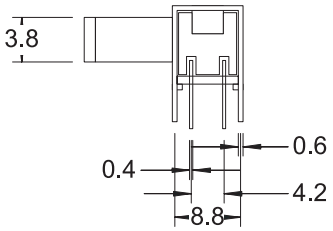

P.C.B. HOLE DETAIL

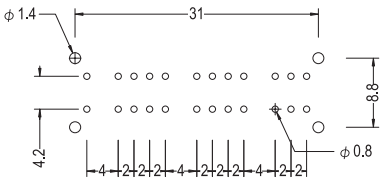

ORDER INFORMATION

KLS7-SK51 - 6 2 H 01 - X X - X

Part Number
Slide Switch Type
Pole
Throw

Travelling					
C	D	E	F	G	H
1. 5	2. 0	2. 5	3. 0	3. 5	4. 0
I	J	K	L	N	P
4. 5	5. 0	5. 5	6. 0	7. 0	8. 0

Operating Force
Knobe Height
Sequential No.

Knob Type

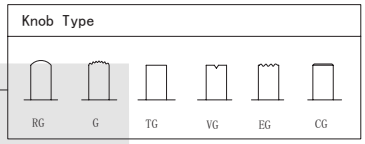

Slide Switch Series

KLS7-SK52-64D01 (6P4T) Slide Switch Series

SPECIFICATIONS

Rating: 0. 5A 50VDC
Contact Resistance: 30mΩ Max
Insulation Resistance:500VDC 100MΩ Min
Dielectric Strength:500V AC 1 Minute
Operating Force:100gf~800gf
Electrical Life :10,000 cycles

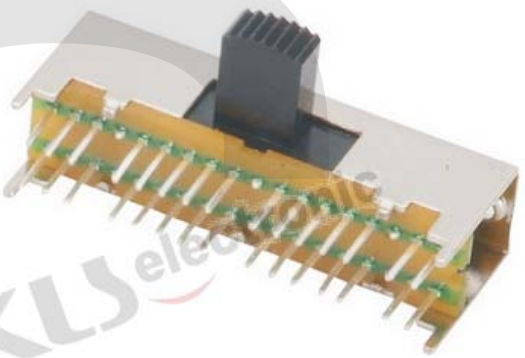

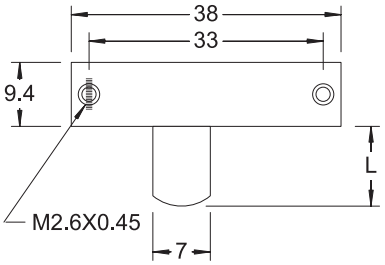

L=7 - 12

SCHEMATIC

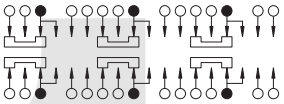

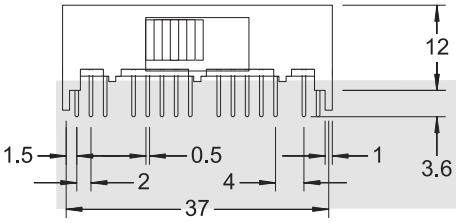

P.C.B. HOLE DETAIL

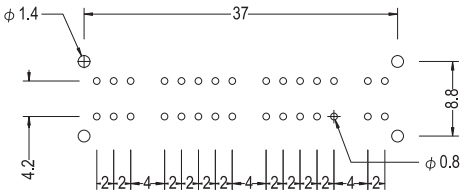

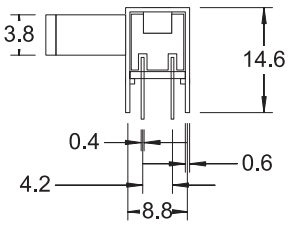

ORDER INFORMATION

KLS7-SK52 - 6 4 D 01 - X X - X

Part Number
Slide Switch Type
Pole
Throw
Operating Force
Knobe Height
Sequential No.

Travelling					
C	D	E	F	G	H
1. 5	2. 0	2. 5	3. 0	3. 5	4. 0
I	J	K	L	N	P
4. 5	5. 0	5. 5	6. 0	7. 0	8. 0

Knob Type

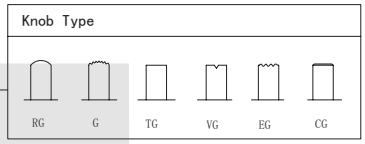

Slide Switch Series

KLS7-SS77-83D01 (8P3T) Slide Switch Series

SPECIFICATIONS

Rating: 0. 5A 50VDC
Contact Resistance: 30mΩ Max
Insulation Resistance:500VDC 100MΩ Min
Dielectric Strength:500V AC 1 Minute
Operating Force:100gf~800gf
Electrical Life :10,000 cycles



L=7 - 9

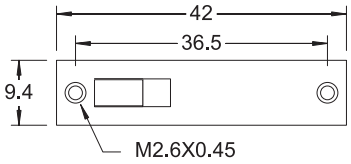

SCHEMATIC

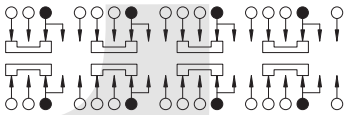

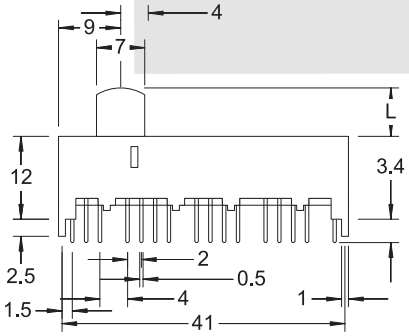

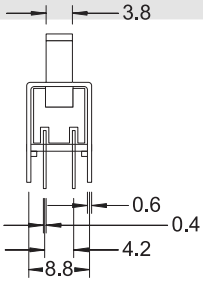

P.C.B. HOLE DETAIL

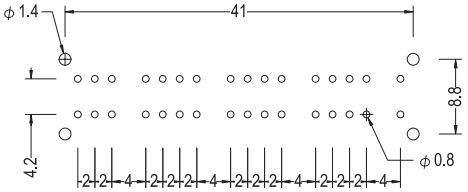

ORDER INFORMATION

KLS7-SS77 - 8 3 D 01 - X X - X

Part Number
Slide Switch Type
Pole
Throw

Travelling					
C	D	E	F	G	H
1. 5	2. 0	2. 5	3. 0	3. 5	4. 0
I	J	K	L	N	P
4. 5	5. 0	5. 5	6. 0	7. 0	8. 0

Sequential No.
Knobe Height
Operating Force

Knob Type

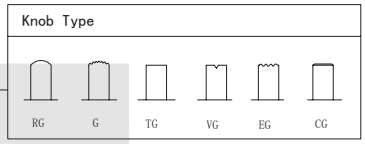

DIP Switch Series

KLS7-SS031 Series

SPECIFICATIONS

Electrical life:10,000cycles
Mechanical life:10,000 cycles min
Contact Rating:0.3Amps @6 VDC
Insulation Resistance: > 100M Ω DC250V
Withstand Voltage:AC250V 1 minute ,
Contact Resistance: < 70mΩ
Ambient Humidity: < 85%RH
Operating Temper : -25℃ to70℃
Operating Force: 250 150 gf
Soldering Process :Hand soldering: Use a soldering iron of 30 watts, controlled at 380℃ approximately 3seconds while applying solder.
Wave soldering: When applying wave soldering,The plastic using PA6T(HTN), The peak temperature of the wave Oven should be set to 260 ℃ max.
Condition for soldering (Wave & Non-washable Type) Temperature Profile: (Figure 1)
Reflow soldering:When applying reflow soldering, the plastic using PA6T(HTN), the peak temperature of the reflow Oven should be set to 250 C max.
Condition for soldering (Reflow & Non-washable Type) Temperature Profile: (Figure 2)

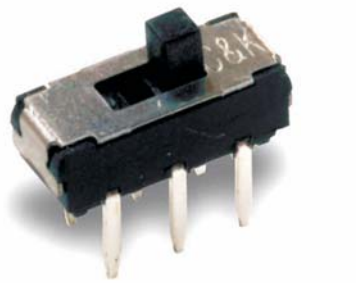

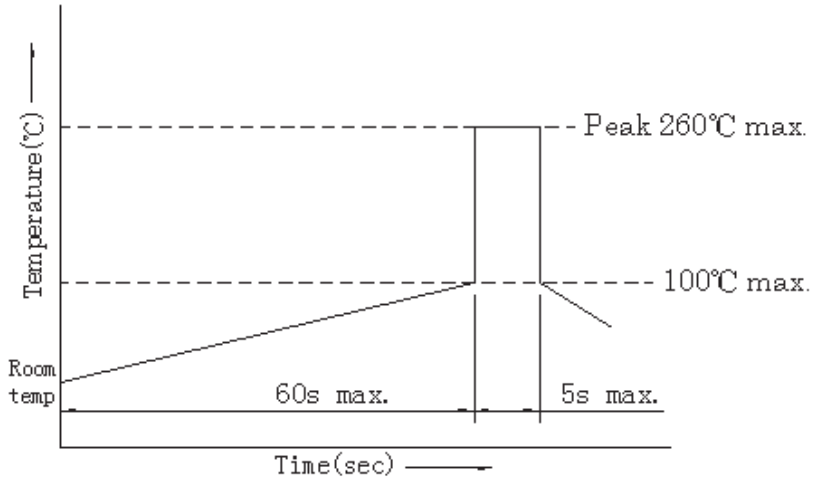

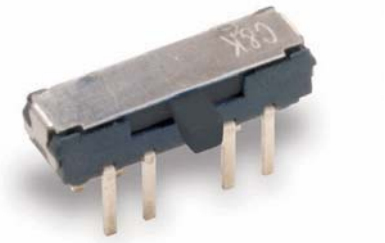

Items	Condition
Preheating temperature	Ambient temperature of the soldered surface of PC board.100℃ max.
Preheating time	60s max.
Soldering temperature	260℃ max.
Continuous dipping time	5s max.
Number of soldering	2 times max.

Wave soldering (Figure1)

ORDER INFORMATION

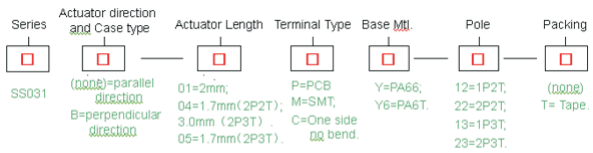

EXAMPLE: SS031-01P-22; SS031-01P-23;SS031B-01M-23; SS031B-01C-12; SS031-04P-23;SS031B-04C-12;SS031B-05M-23;

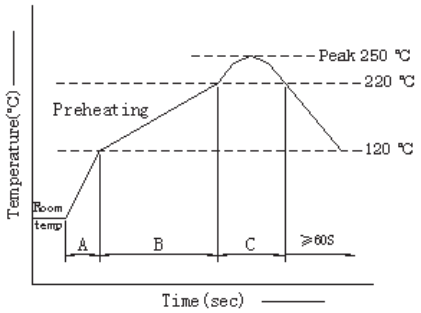

	Components size		Unit
A	Temp. rise gradient	40S	sec
B	Heating time	60-120S	sec
	Heating temperature	120 - 220 ℃	℃
C	Time over 220 ℃	60-90S	sec
	Peak temperature	250	℃
	Peak-temp. hold time	moment	sec
Soldering		1	times

Rellow soldering (Figure 2)

MATERIALS

Stem: High Temperature NYLONG (UL94 V-0)
Case: Stainless Steel
Base: High Temperature NYLONG (UL94 V-0)
Terminals: Brass
Spring plate: Phosphor Bronze

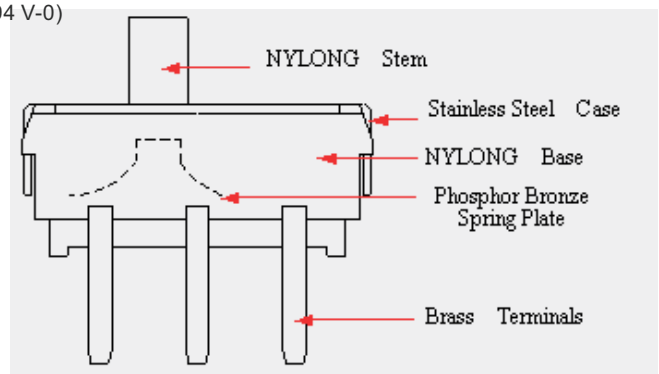

TERMILAL OPTIONS OF SS031-01P -22 (mm)



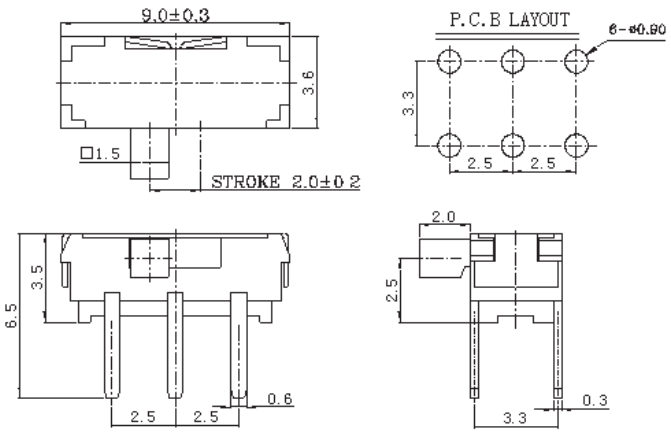

Switch

KLS electronic
www.cnkls.com

TERMILAL OPTIONS OF SS031B- □P -22 (mm)

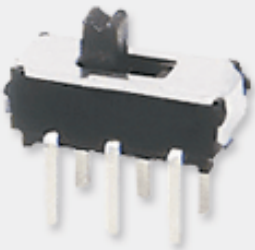

SS031B-□P -22

PART NO.	L	External Form
SS031B-01P-22	2.0	
SS031B-04P-22	1.7	

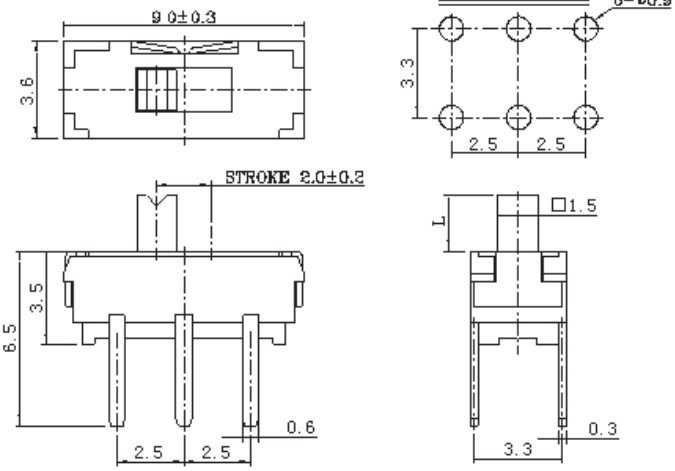

TERMILAL OPTIONS OF SS031- □P-23 (mm)

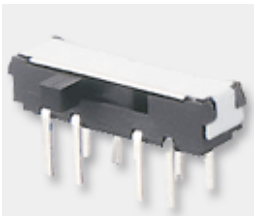

SS031-□P-23

PART NO.	L
SS031-01P-23	2.0
SS031-04P-23	3.0

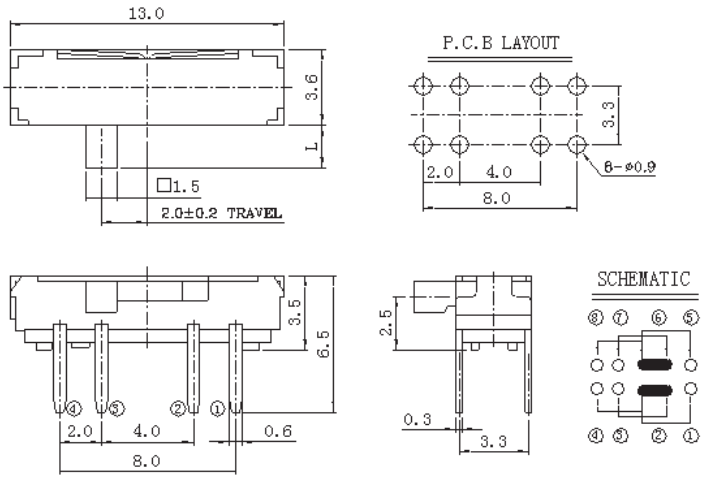

TERMILAL OPTIONS OF SS031B- □P-23 (mm)



SS031B-□P-23

PART NO.	L
SS031B-01P-23	2.0
SS031B-05P-23	1.7

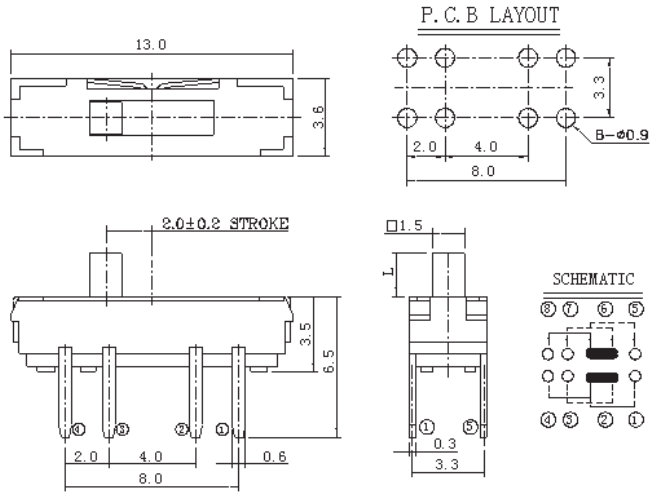

Switch

KLS electronic
www.cnkls.com

TERMILAL OPTIONS OF SS031-□M-23 (mm)

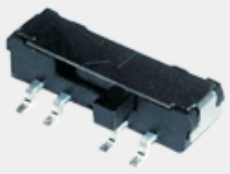

SS031-□M-23

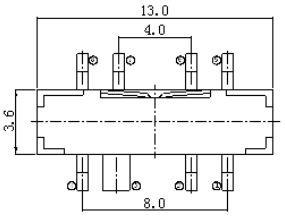

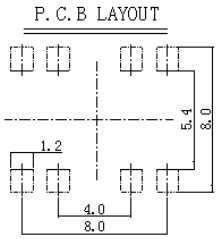

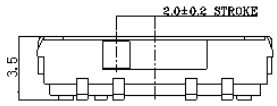

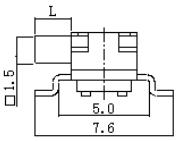

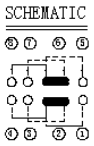

PART NO.	L
SS031-01M-23	2.0
SS031-04M-23	3.0

TERMILAL OPTIONS OF SS031B-□M-23 (mm)

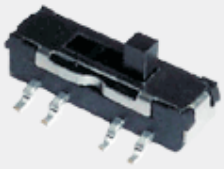

SS031B-□M -23

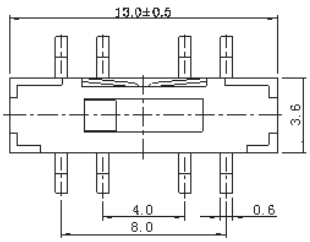

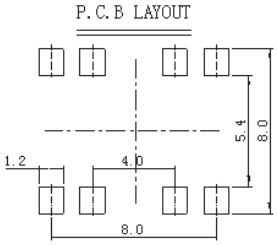

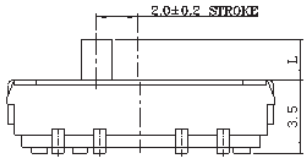

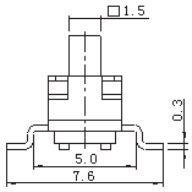

PART NO.	L
SS031B-01M-23	2.0
SS031B-05M-23	1.7

TERMILAL OPTIONS OF SS031B-□M-22 (mm)



SS031B-□M-22

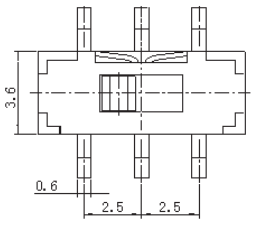

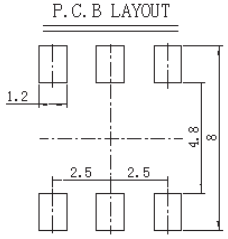

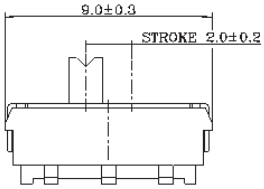

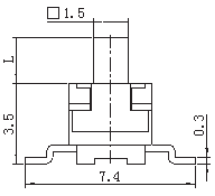

PART NO.	L	External Form
SS031B-01M-22	2.0	
SS031B-04M-22	1.7	

Switch

KLS electronic
www.cnkls.com

TERMILAL OPTIONS OF SS031B-□C-12 (mm)



SS031B-□C-12

PART NO.	L	External Form
SS031B-01C-12	2.0	
SS031B-04C-12	1.7	

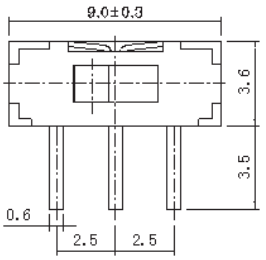

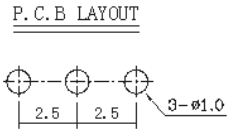

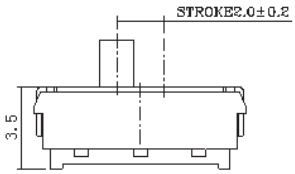

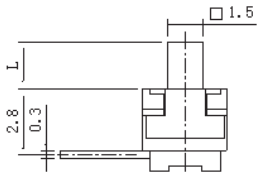

PACKING EXPLANATION :

1. 24,000 PCS for one big box(500 PCS for one bag, 8 bags for one small carton,6small cartons for one big box.)
2. Taping packaging: SS031-01M-22: 1,200 switches shall be packed in a reel;Ten(10)reels at maximum shall be Packed in a package.Tape form and dimensions (Figure 1)

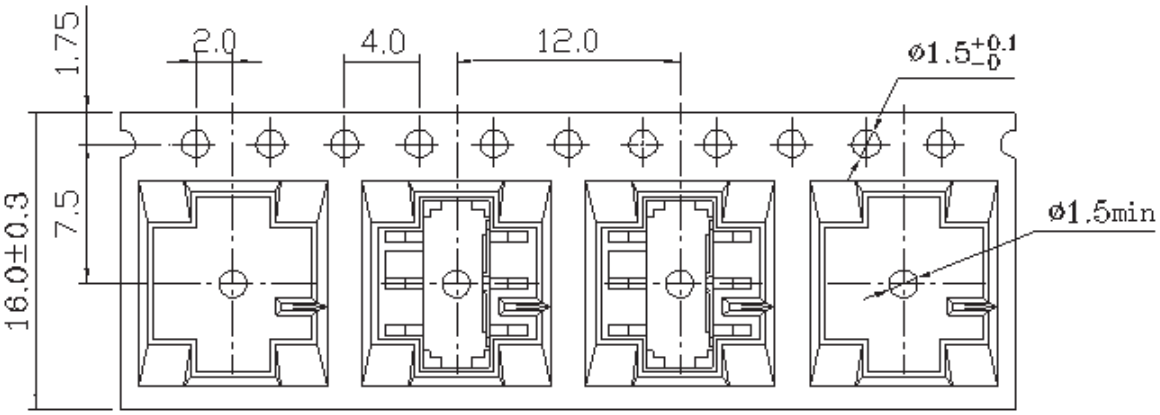

DIP Switch Series

KLS7-SS031FB Series

SPECIFICATIONS



Electrical life:10,000cycles
Mechanical life:10,000 cycles min
Contact Rating:0.1Amps @50VDC
Insulation Resistance: > 100M Ω DC100V
Withstand Voltage:AC100V 1 minute ,
Contact Resistance: < 100mΩ
Ambient Humidity: < 85%RH
Operating Temper : -25℃ to70℃
Operating Force: 250 150 gf
Soldering Process :Hand soldering: Use a soldering iron of 30 watts,
Controlled at 360℃ approximately 3seconds while applying solder.
Wave soldering: When applying wave soldering,The plastic using PA6T(HTN),
The peak temperature of the wave Oven should be set to 260 ℃ max.
Condition for soldering (Wave & Non-washable Type) Temperature Profile: (Figure 1)
Reflow soldering:When applying reflow soldering, the plastic using PA6T(HTN),
the peak temperature of the reflow Oven should be set to 250 C max.
Condition for soldering (Reflow & Non-washable Type) Temperature Profile: (Figure 2)

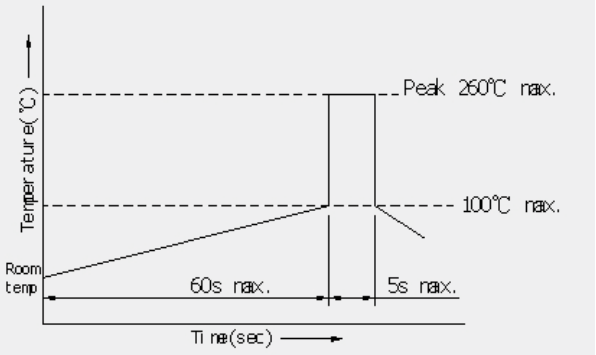

Items	Condition
Preheating temperature	Ambient temperature of the soldered surface of PC board. 100℃ max.
Preheating time	60s max.
Soldering temperature	260℃ max.
Continuous dipping time	5s max.
Number of soldering	2 times max.

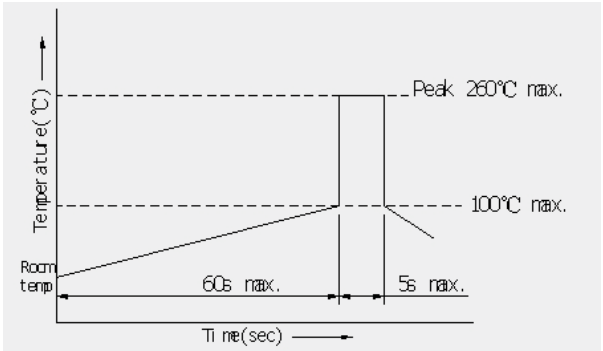

Items	Condition
Preheating temperature	Ambient temperature of the soldered surface of PC board. 100℃ max.
Preheating time	60s max.
Soldering temperature	260℃ max.
Continuous dipping time	5s max.
Number of soldering	2 times max.

ORDER INFORMATION

HOW TO ORDER

Series	Actuator Length	Terminal Type	Case Type	Pole
SS031FB SS031FBR	01=2.0mm;	P1=2.0mm P2=3.2mm M=SMT	(none) =No grounding B=Case grounding	12=1P2T;

EXAMPLE:SS031FB-01P1-12;SS031FB-01M-12; SS031FB-01MB-12; SS031FBR-01M-12;

Switch

KLS electronic
www.cnkls.com

MATERIALS

Case: Stainless Steel
Base: High Temperature NYLONG (UL94 V-0)
Stem: High Temperature NYLONG (UL94 V-0)
Terminals: Brass
Spring plate: Phosphor Bronze
Spring:SWP

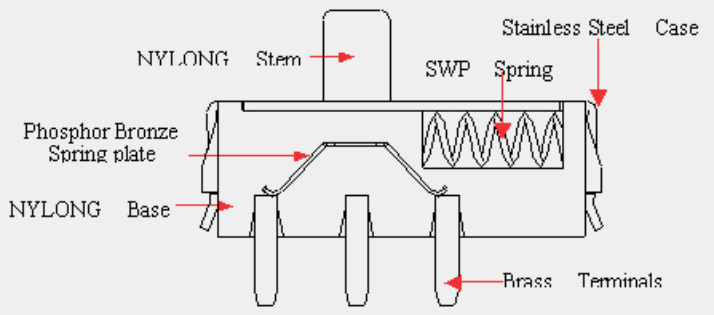

DIMENSION DRAWING of SS031FB-01P*-12 (mm)

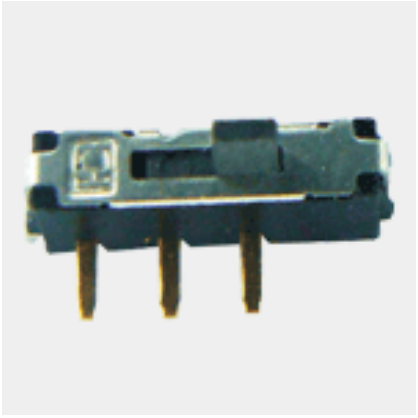

SS031FB-01P*-12

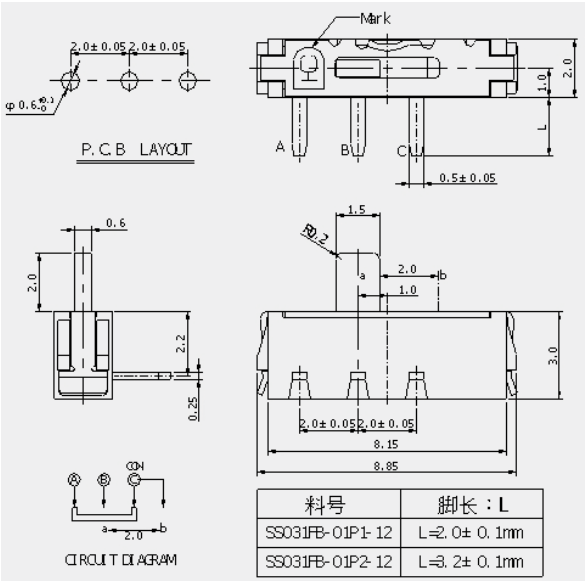

DIMENSION DRAWING of SS031FB-01M-12 (mm)



SS031FB-01M-12

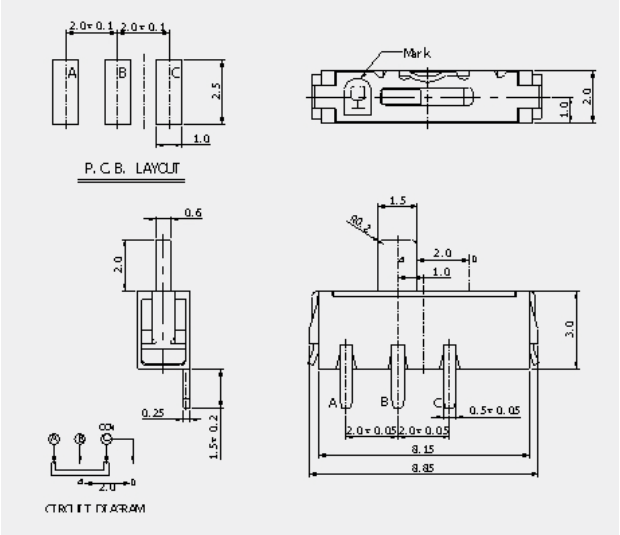

Switch

KLS electronic
www.cnkls.com

DIMENSION DRAWING of SS031FB-01MB-12 (mm)



SS031FB-01MB-12

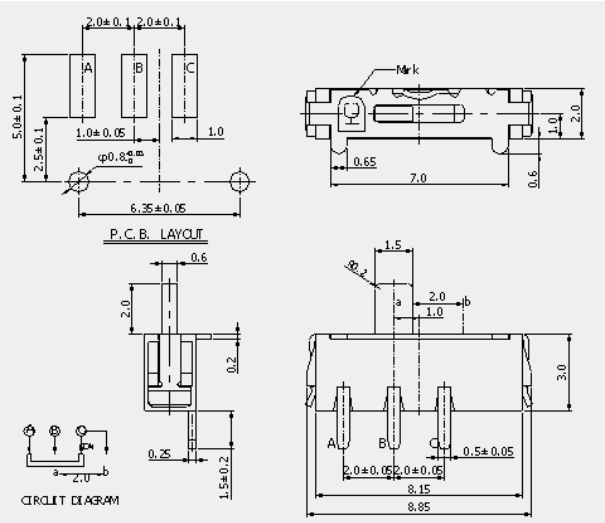

DIMENSION DRAWING of SS031FBR-01P*-12 (mm)



SS031FBR-01P*-12

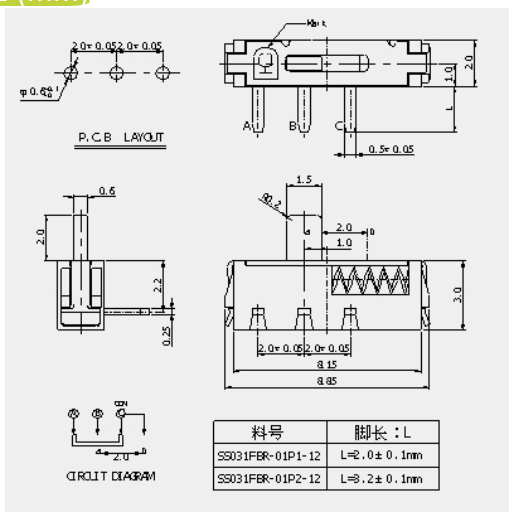

料号	脚长：L
SS031FBR-01P1-12	L=2.0±0.1mm
SS031FBR-01P2-12	L=3.2±0.1mm

DIMENSION DRAWING of SS031FBR-01M-12 (mm)



SS031FBR-01M-12

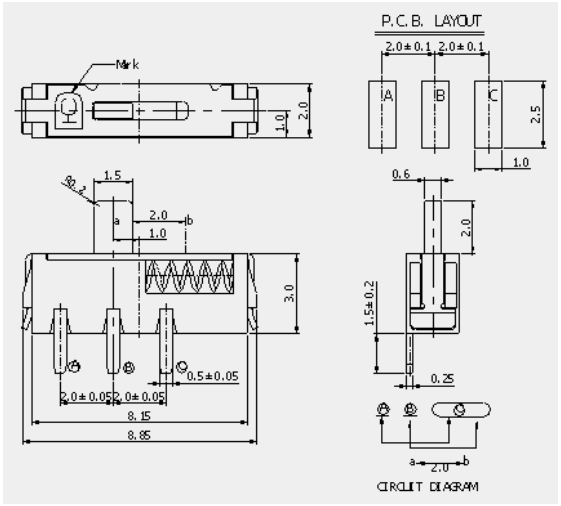

DIP Switch Series

KLS7-SS038 Series

SPECIFICATIONS

Electrical life:10,000cycles
Mechanical life:10,000 cycles min
Contact Rating:0.3Amps @4 VDC
Insulation Resistance: > 100M Ω DC100V
Withstand Voltage:AC100V 1 minute ,
Contact Resistance: < 100mΩ
Ambient Humidity: < 85%RH
Operating Temper : -25℃ to80℃
Operating Force : 200 100 gf
Soldering Process :Hand soldering : Use a soldering iron of 30 watts, controlled at 380℃ approximately 3seconds while applying solder.
Reflow soldering:When applying reflow soldering, the peak temperature of the reflow Oven should be set to 250 C max.
Condition for soldering (Reflow & Non-washable Type) Temperature Profile.



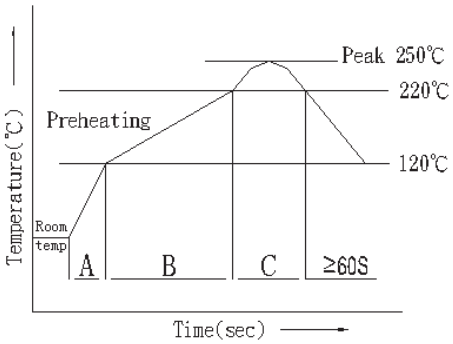

	Components size		Unit
A	Temp. rise gradient	40S	sec
B	Heating time	60-120S	sec
	Heating temperature	120-220℃	℃
C	Time over 220℃	60-90S	sec
	Peak temperature	250	℃
	Peak-temp. hold time	moment	sec
Soldering		1	times

ORDER INFORMATION

Series	Actuator direction and Case type	Actuator Length	Terminal Type	Base Mtl.	Pole	Packing
SS038	(none)=level B=UP	01=1.5mm; 02=2.3mm; 03=1.0mm; 04=1.9mm;	M M1 see chart	none=PA46; Y6=PA6T;	12=1P2T; 22=2P2T;	(none) T= Tape

EXAMPLE: SS038-01M-12-T; SS038-01MY6-12-T; SS038-01M1-12-T; SS038-01M1Y6-12-T; SS038-02M-12-T; SS038-02MY6-12-T; SS038B-03MY6-22-T; SS038-04MY6-22-T;

Switch

KLS electronic
www.cnkls.com

MATERIALS

Stem: High Temperature NYLONG (UL94 V-0)
Base: High Temperature NYLONG (UL94 V-0)
Case: Nickeet Silren or Stainless Steel
Terminals: Phosphor Bronze or Brass
Spring plate: Phosphor Bronze
Fixed Rod: Phosphor Bronze or Stainless Steel

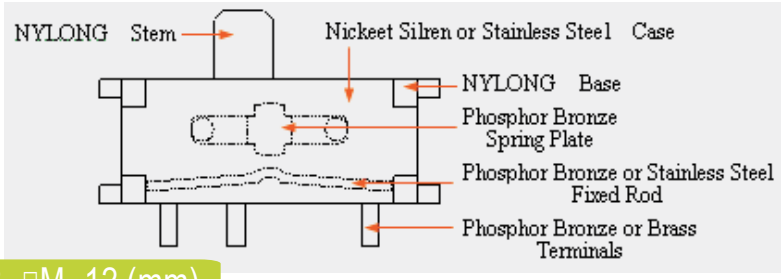

DIMENSION DRAWING of SS038-□M -12 (mm)

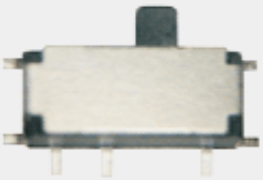

SS038-□M-12

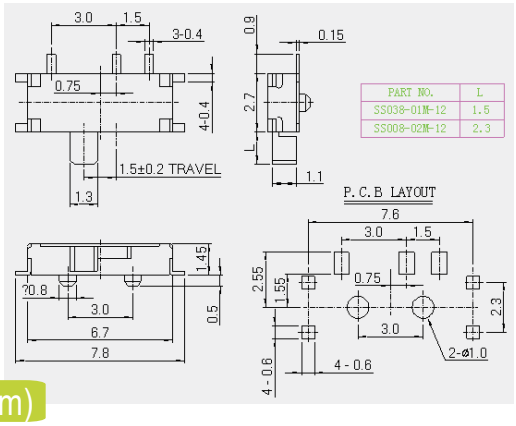

DIMENSION DRAWING of SS038-□M 1-12 (mm)



SS038-□M1-12

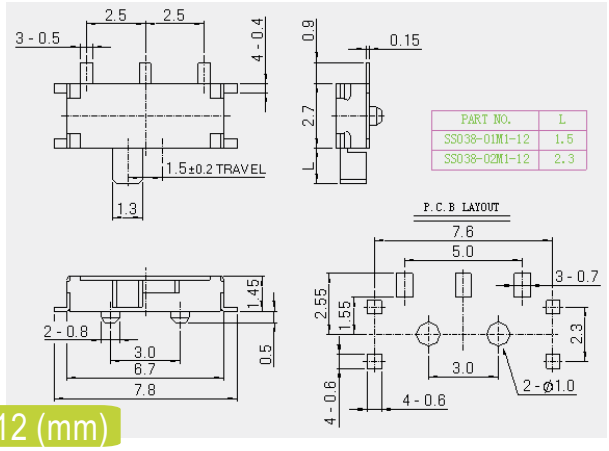

DIMENSION DRAWING of SS038-□M 1-12 (mm)

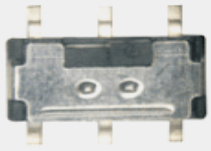

SS038B-03M-22

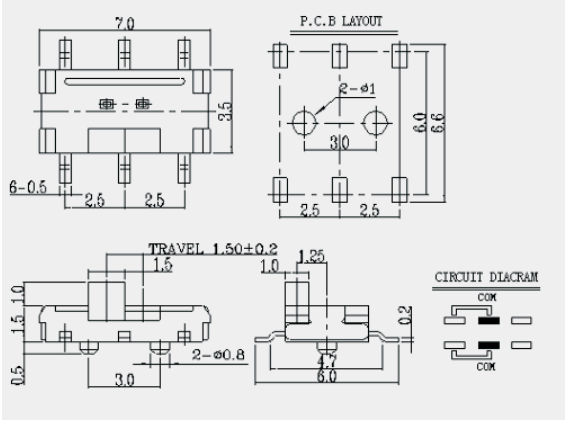

Switch

KLS electronic
www.cnkls.com

DIMENSION DRAWING of SS038-04M-22 (mm)

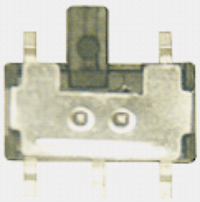

SS038-04M-22

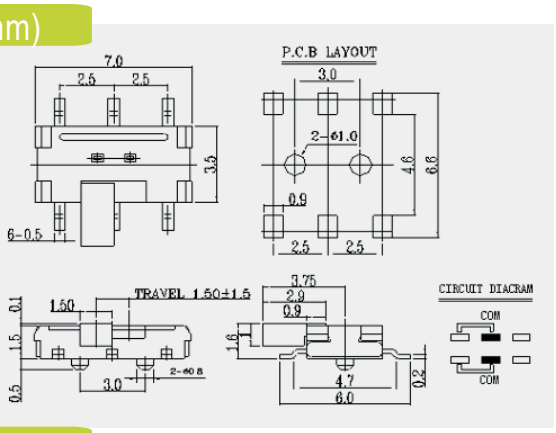

DIMENSION DRAWING of SS038-01MBY7-12 (mm



SS038-01MBY7-12

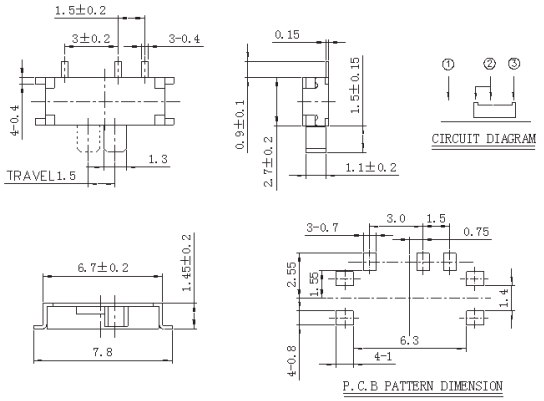

PACKING EXPLANATION :

60,000 PCS for one big box
(1,000 PCS for one bag, 10 bags for one small carton,
6small cartons for one big box.)
Taping packaging :

1. SS038-01/02M: 3,000 switches shall be packed in a reel;
   Ten(10)reels at maximum shall be packed in a package.
   Tape form and dimensions (Figure 1)
2. SS038B-03M-22: 1,500 switches shall be packed in a reel;
   Ten(10)reels at maximum shall be packed in a package.
   Tape form and dimensions (Figure 2)
3. SS038-04M-22: 1,500 switches shall be packed in a reel;
   Ten(10)reels at maximum shall be packed in a package.
   Tape form and dimensions (Figure 3)

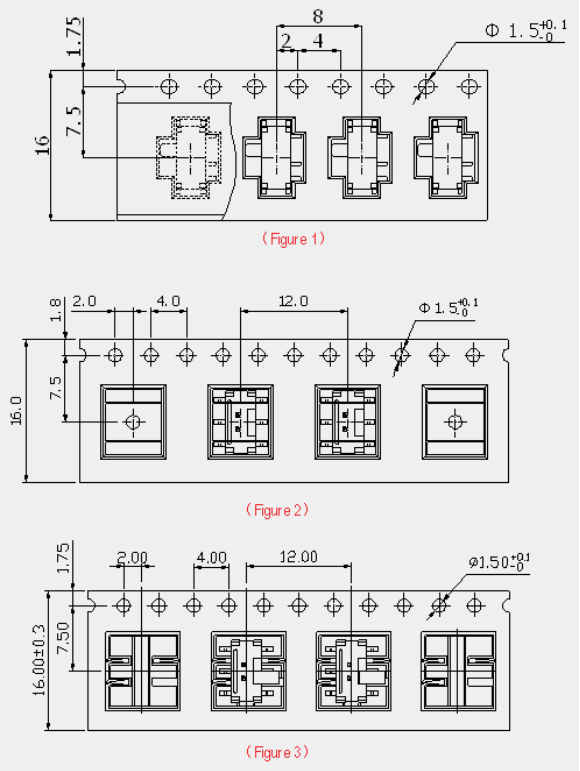

Toggle Switch Series

KLS7-MS-101-A1 Miniature Toggle Switch Series

SPECIFICATIONS

Rating: 5A 125VAC; 2A 250VAC
Contact Resistance: 20MΩ max
Insulation Resistance:500V DC 1000MΩ Min
Dielectric Strength:1500V AC 1 Minute
Operating Temperature:-55°C~+85°C
Electrical Life :20,000 cycles



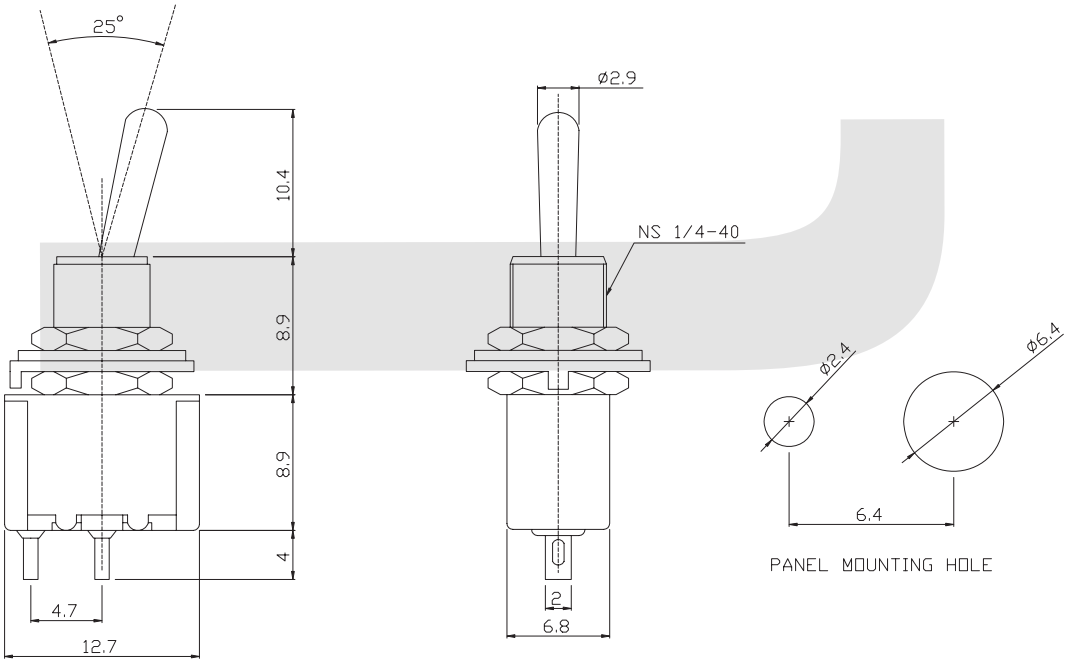

ORDER INFORMATION

KLS7- MS-1 01-A 1 X X

- Part Number
- MS:Miniature Toggle Switch Series
- POLES: 1=Single Pole 2=Double Pole
- CIRCUIT: 01=ON-OFF 02=ON-ON 03=ON-OFF-ON
- Handle Type: A=Standard C=Short
- Terminal Type: 1=Solder terminal 2=Pc terminal 3=Pc-H terminal 4=Pc-V terminal
- Handle Cap Type: R=Red B=Black W=White Y=Yello G=Green BL=Blue
- BRACKET: T=With Bracket None=Without Bracket

Toggle Switch Series

KLS7-MS-101-A2 Miniature Toggle Switch Series

SPECIFICATIONS

Rating: 5A 125VAC; 2A 250VAC
Contact Resistance: 20MΩ max
Insulation Resistance:500V DC 1000MΩ Min
Dielectric Strength:1500V AC 1 Minute
Operating Temperature:-55°C~+85°C
Electrical Life :20,000 cycles



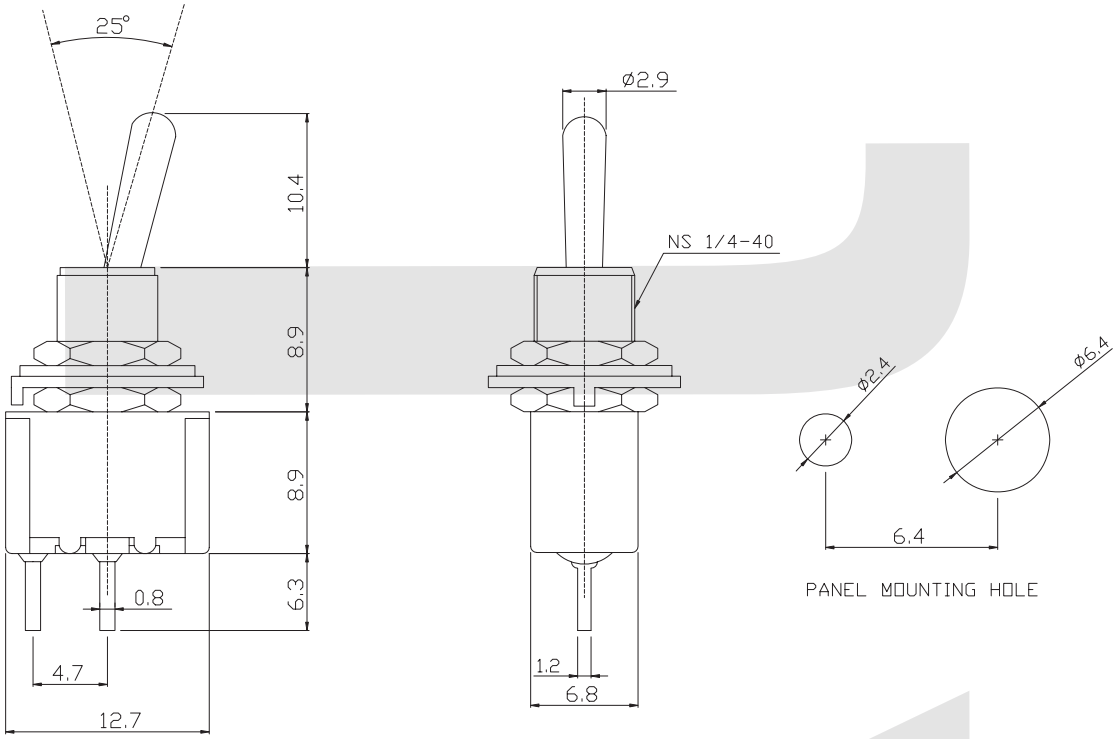

ORDER INFORMATION

KLS7- MS-1 01-A 2 X X

Part Number

MS:Miniature Toggle Switch Series

POLES: 1=Single Pole
2=Double Pole

CIRCUIT: 01=ON-OFF
02=ON-ON
03=ON-OFF-ON

BRACKET: T=With Bracket None=Without Bracket

Handle Cap Type: R=Red B=Black W=White
Y=Yello G=Green BL=Blue

Terminal Type: 1=Solder terminal 2=Pc terminal
3=Pc-H terminal 4=Pc-V terminal

Handle Type: A=Standard C=Short

Toggle Switch Series

KLS7-MS-101-A2T Miniature Toggle Switch Series

SPECIFICATIONS

Rating: 5A 125VAC; 2A 250VAC
Contact Resistance: 20MΩ max
Insulation Resistance:500V DC 1000MΩ Min
Dielectric Strength:1500V AC 1 Minute
Operating Temperature:-55°C~+85°C
Electrical Life :20,000 cycles



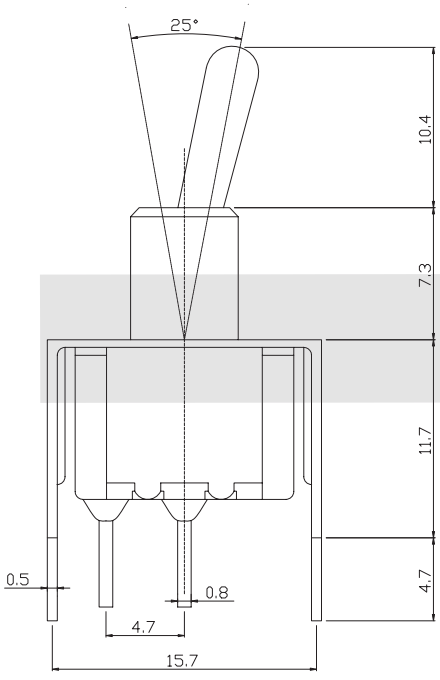

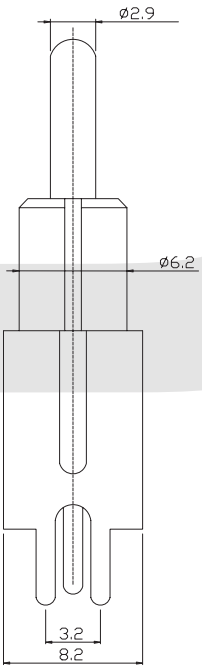

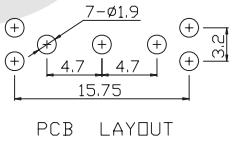

PCB LAYOUT

ORDER INFORMATION

KLS7- MS-1 01-A 2 X T

Part Number

MS:Miniature Toggle Switch Series

POLES: 1=Single Pole
2=Double Pole

CIRCUIT: 01=ON-OFF
02=ON-ON
03=ON-OFF-ON

BRACKET: T=With Bracket None=Without Bracket

Handle Cap Type: R=Red B=Black W=White
Y=Yello G=Green BL=Blue

Terminal Type: 1=Solder terminal 2=Pc terminal
3=Pc-H terminal 4=Pc-V terminal

Handle Type: A=Standard C=Short

Toggle Switch Series

KLS7-MS-102-A1 Miniature Toggle Switch Series

SPECIFICATIONS

Rating: 5A 125VAC; 2A 250VAC
Contact Resistance: 20MΩ max
Insulation Resistance:500V DC 1000MΩ Min
Dielectric Strength:1500V AC 1 Minute
Operating Temperature:-55°C~+85°C
Electrical Life :20,000 cycles



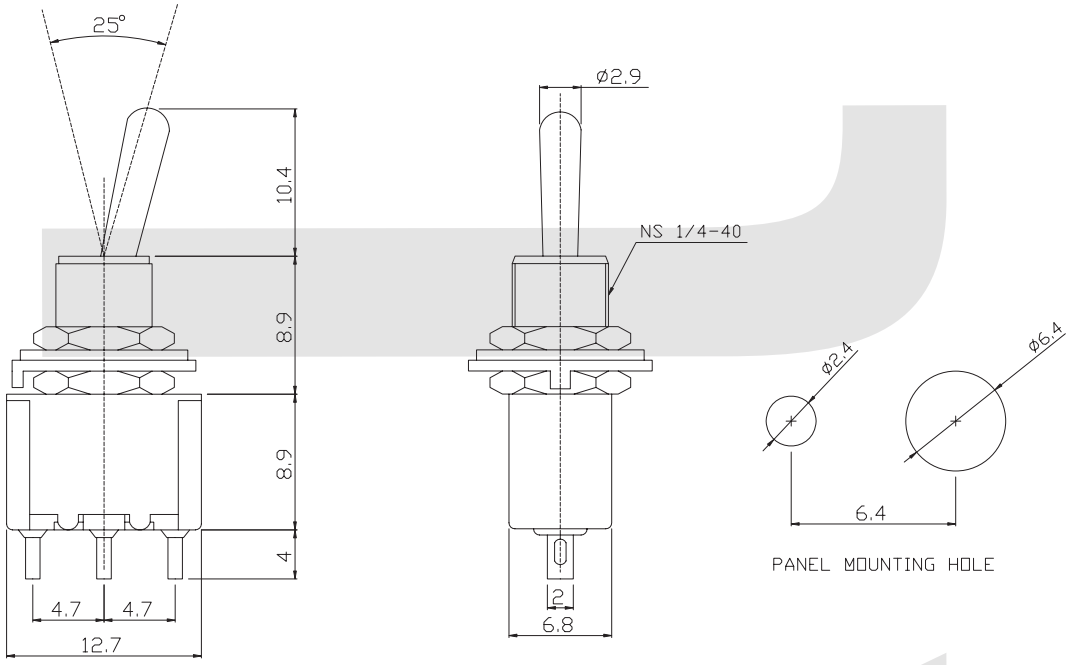

ORDER INFORMATION

KLS7- MS-1 02-A 1 X X

Part Number

MS:Miniature Toggle Switch Series

POLES: 1=Single Pole
2=Double Pole

CIRCUIT: 01=ON-OFF
02=ON-ON
03=ON-OFF-ON

Handle Type: A=Standard C=Short

Terminal Type: 1=Solder terminal 2=Pc terminal
3=Pc-H terminal 4=Pc-V terminal

Handle Cap Type: R=Red B=Black W=White
Y=Yello G=Green BL=Blue

BRACKET: T=With Bracket None=Without Bracket

Toggle Switch Series

KLS7-MS-102-A2 Miniature Toggle Switch Series

SPECIFICATIONS

Rating: 5A 125VAC; 2A 250VAC
Contact Resistance: 20MΩ max
Insulation Resistance:500V DC 1000MΩ Min
Dielectric Strength:1500V AC 1 Minute
Operating Temperature:-55°C~+85°C
Electrical Life :20,000 cycles



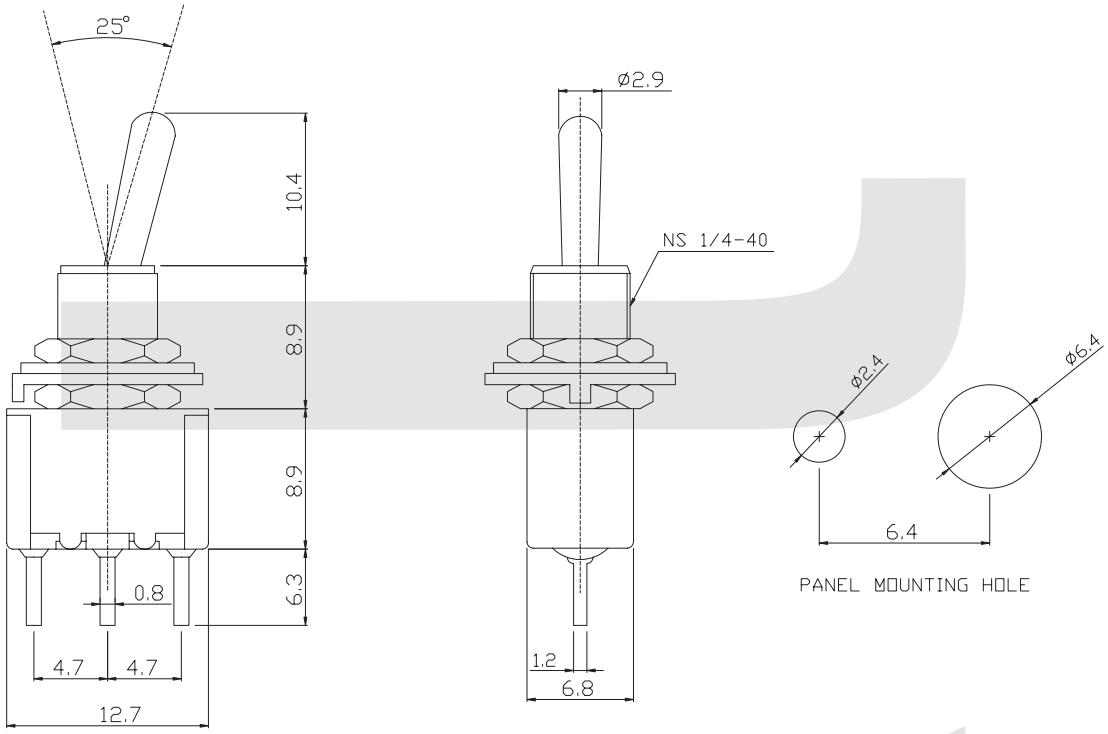

ORDER INFORMATION

KLS7- MS-1 02-A 2 X X

Part Number
MS:Miniature Toggle Switch Series
POLES: 1=Single Pole
2=Double Pole
CIRCUIT: 01=ON-OFF
02=ON-ON
03=ON-OFF-ON
Handle Type: A=Standard C=Short
Terminal Type: 1=Solder terminal 2=Pc terminal
3=Pc-H terminal 4=Pc-V terminal
Handle Cap Type: R=Red B=Black W=White
Y=Yello G=Green BL=Blue
BRACKET: T=With Bracket None=Without Bracket

Toggle Switch Series

KLS7-MS-102-A2T Miniature Toggle Switch Series

SPECIFICATIONS

Rating: 5A 125VAC; 2A 250VAC
Contact Resistance: 20MΩ max
Insulation Resistance:500V DC 1000MΩ Min
Dielectric Strength:1500V AC 1 Minute
Operating Temperature:-55°C~+85°C
Electrical Life :20,000 cycles



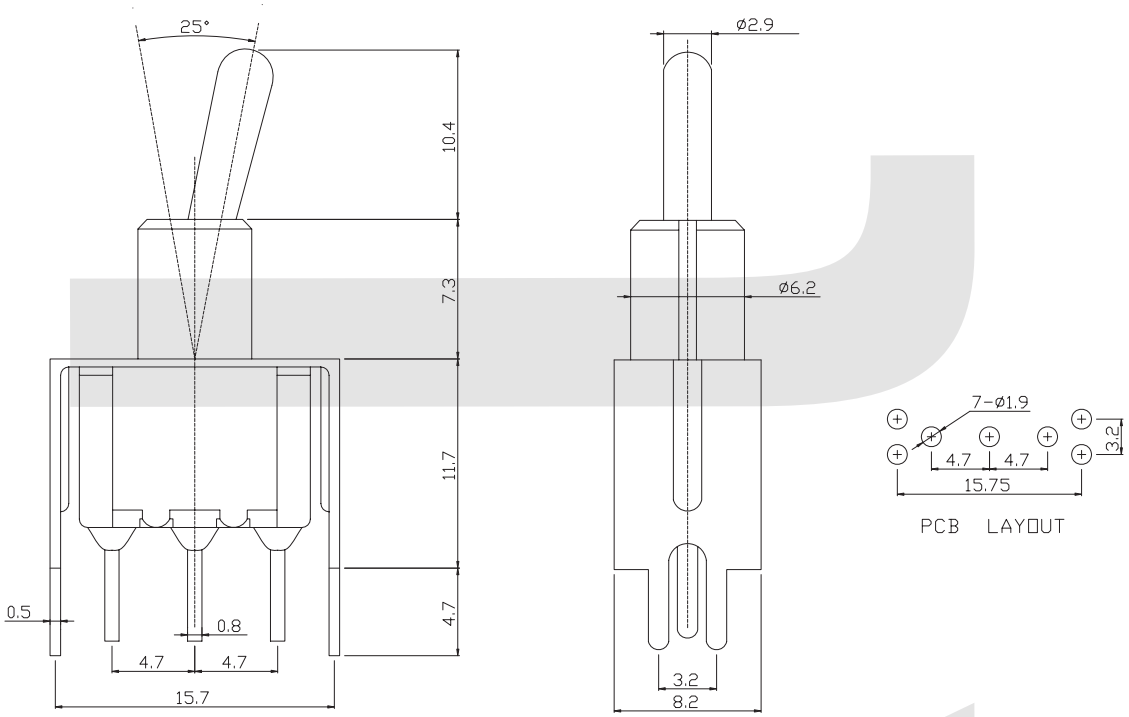

ORDER INFORMATION

KLS7- MS-1 02-A 2 X T

Part Number

MS:Miniature Toggle Switch Series

POLES: 1=Single Pole
2=Double Pole

CIRCUIT: 01=ON-OFF
02=ON-ON
03=ON-OFF-ON

BRACKET: T=With Bracket None=Without Bracket

Handle Cap Type: R=Red B=Black W=White
Y=Yello G=Green BL=Blue

Terminal Type: 1=Solder terminal 2=Pc terminal
3=Pc-H terminal 4=Pc-V terminal

Handle Type: A=Standard C=Short

Toggle Switch Series

KLS7-MS-102-C3 Miniature Toggle Switch Series

SPECIFICATIONS

Rating: 5A 125VAC; 2A 250VAC
Contact Resistance: 20MΩ max
Insulation Resistance:500V DC 1000MΩ Min
Dielectric Strength:1500V AC 1 Minute
Operating Temperature:-55°C~+85°C
Electrical Life :20,000 cycles



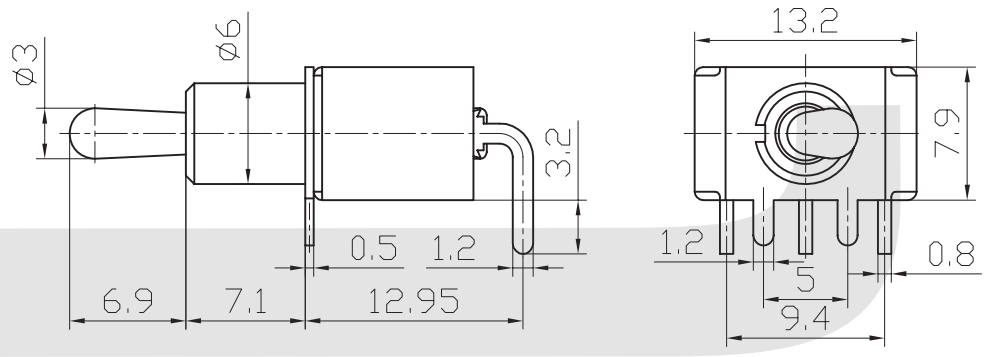

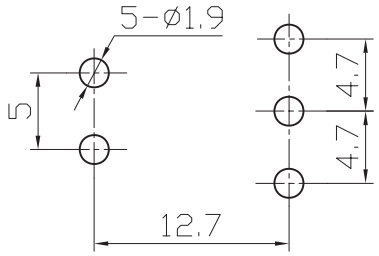

ORDER INFORMATION

KLS7- MS-1 02-C 3 X X

Part Number

MS:Miniature Toggle Switch Series

POLES: 1=Single Pole
2=Double Pole

CIRCUIT: 01=ON-OFF
02=ON-ON
03=ON-OFF-ON

BRACKET: T=With Bracket None=Without Bracket

Handle Cap Type: R=Red B=Black W=White
Y=Yello G=Green BL=Blue

Terminal Type: 1=Solder terminal 2=Pc terminal
3=Pc-H terminal 4=Pc-V terminal

Handle Type: A=Standard C=Short

Toggle Switch Series

KLS7-MS-102-C4 Miniature Toggle Switch Series

SPECIFICATIONS

Rating: 5A 125VAC; 2A 250VAC
Contact Resistance: 20MΩ max
Insulation Resistance:500V DC 1000MΩ Min
Dielectric Strength:1500V AC 1 Minute
Operating Temperature:-55°C~+85°C
Electrical Life :20,000 cycles



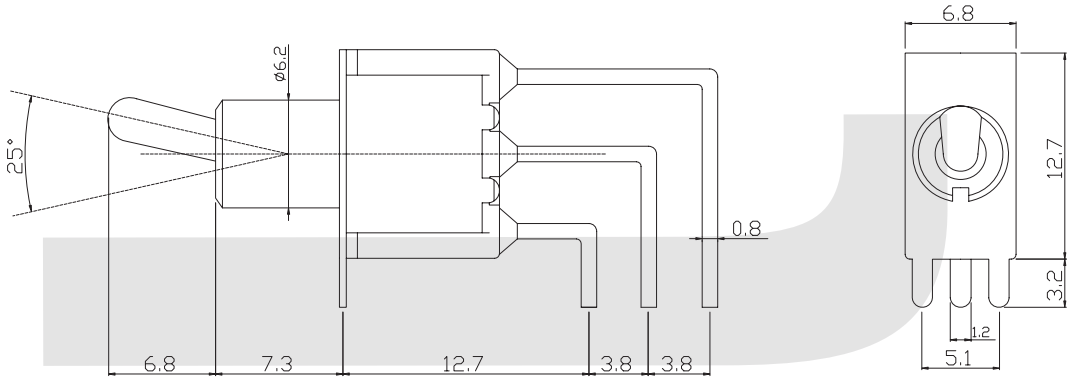

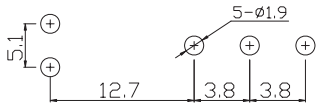

PCB LAYOUT

ORDER INFORMATION

KLS7- MS-1 02-C 4 X X

Part Number

MS:Miniature Toggle Switch Series

POLES: 1=Single Pole
2=Double Pole

CIRCUIT: 01=ON-OFF
02=ON-ON
03=ON-OFF-ON

BRACKET: T=With Bracket None=Without Bracket

Handle Cap Type: R=Red B=Black W=White
Y=Yello G=Green BL=Blue

Terminal Type: 1=Solder terminal 2=Pc terminal
3=Pc-H terminal 4=Pc-V terminal

Handle Type: A=Standard C=Short

Toggle Switch Series

KLS7-MS-201-A1 Miniature Toggle Switch Series

SPECIFICATIONS

Rating: 5A 125VAC; 2A 250VAC
Contact Resistance: 20MΩ max
Insulation Resistance:500V DC 1000MΩ Min
Dielectric Strength:1500V AC 1 Minute
Operating Temperature:-55°C~+85°C
Electrical Life :20,000 cycles



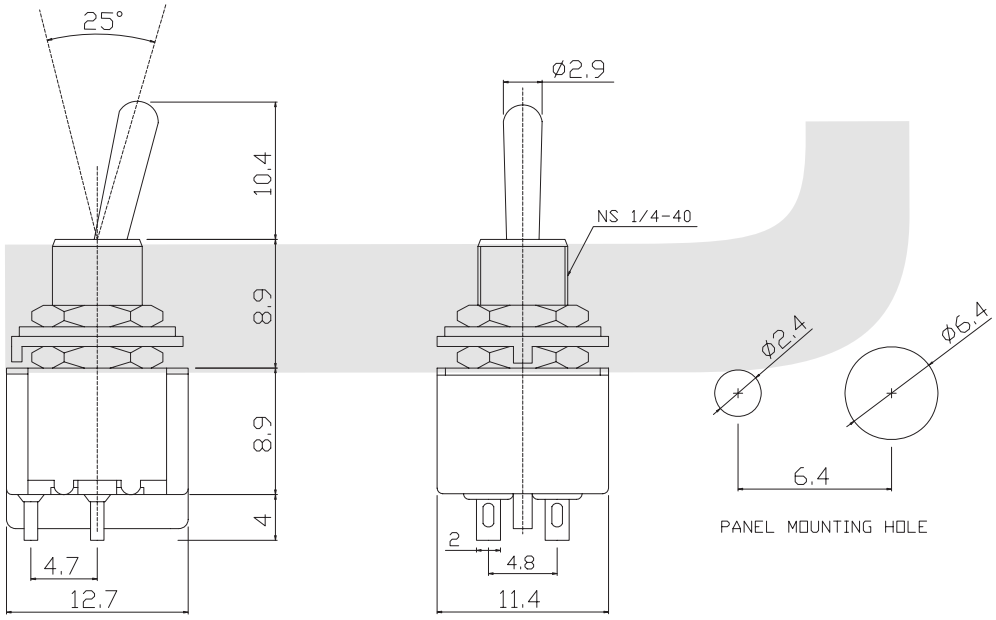

ORDER INFORMATION

KLS7- MS-2 01-A 1 X X

Part Number
MS:Miniature Toggle Switch Series
POLES: 1=Single Pole 2=Double Pole
CIRCUIT: 01=ON-OFF 02=ON-ON 03=ON-OFF-ON
Handle Type: A=Standard C=Short
Terminal Type: 1=Solder terminal 2=Pc terminal 3=Pc-H terminal 4=Pc-V terminal
Handle Cap Type: R=Red B=Black W=White Y=Yello G=Green BL=Blue
BRACKET: T=With Bracket None=Without Bracket

Toggle Switch Series

KLS7-MS-201-A2 Miniature Toggle Switch Series

SPECIFICATIONS

Rating: 5A 125VAC; 2A 250VAC
Contact Resistance: 20MΩ max
Insulation Resistance:500V DC 1000MΩ Min
Dielectric Strength:1500V AC 1 Minute
Operating Temperature:-55°C~+85°C
Electrical Life :20,000 cycles



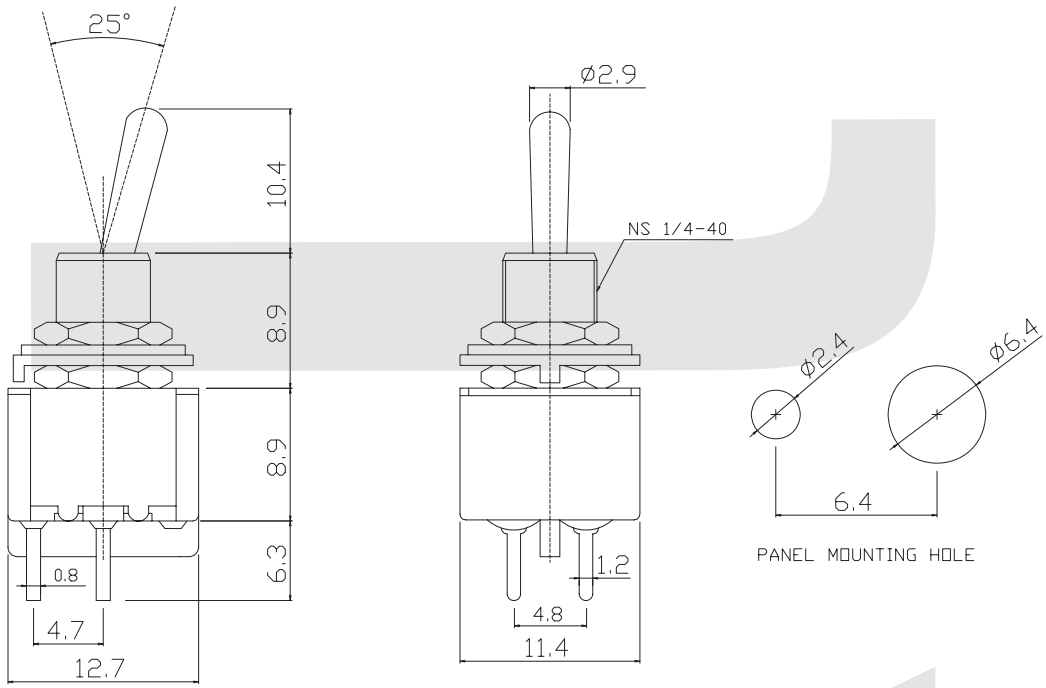

ORDER INFORMATION

KLS7- MS-2 01-A 2 X X

Part Number

MS:Miniature Toggle Switch Series

POLES: 1=Single Pole
2=Double Pole

CIRCUIT: 01=ON-OFF
02=ON-ON
03=ON-OFF-ON

BRACKET: T=With Bracket None=Without Bracket

Handle Cap Type: R=Red B=Black W=White
Y=Yello G=Green BL=Blue

Terminal Type: 1=Solder terminal 2=Pc terminal
3=Pc-H terminal 4=Pc-V terminal

Handle Type: A=Standard C=Short

Toggle Switch Series

KLS7-MS-202-A1 Miniature Toggle Switch Series

SPECIFICATIONS

Rating: 5A 125VAC; 2A 250VAC
Contact Resistance: 20MΩ max
Insulation Resistance:500V DC 1000MΩ Min
Dielectric Strength:1500V AC 1 Minute
Operating Temperature:-55°C~+85°C
Electrical Life :20,000 cycles



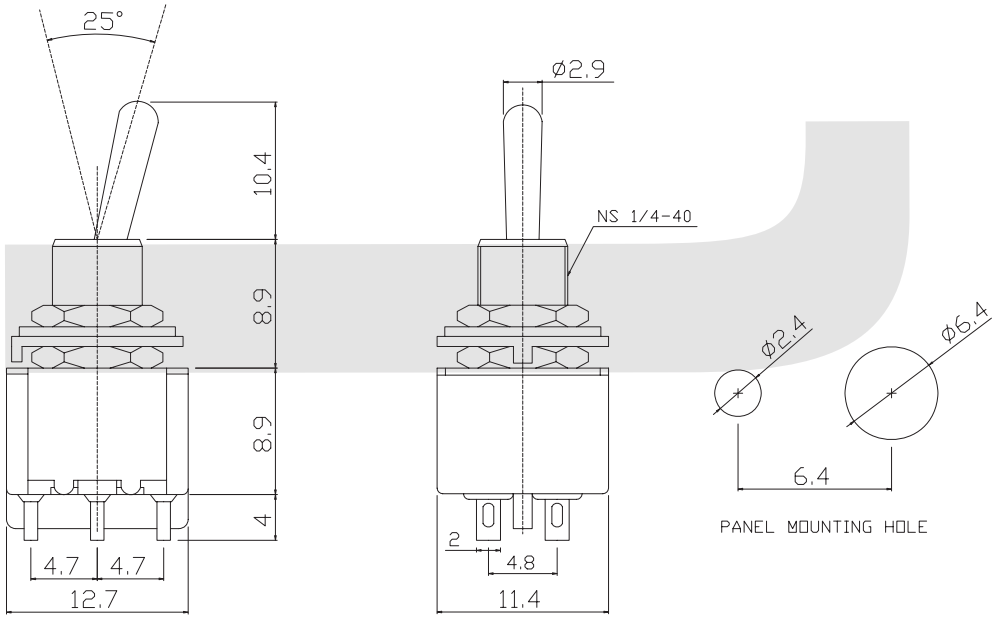

ORDER INFORMATION

KLS7- MS-2 02-A 1 X X

Part Number

MS:Miniature Toggle Switch Series

POLES: 1=Single Pole
2=Double Pole

CIRCUIT: 01=ON-OFF
02=ON-ON
03=ON-OFF-ON

Handle Type: A=Standard C=Short

Terminal Type: 1=Solder terminal 2=Pc terminal
3=Pc-H terminal 4=Pc-V terminal

Handle Cap Type: R=Red B=Black W=White
Y=Yello G=Green BL=Blue

BRACKET: T=With Bracket None=Without Bracket

Toggle Switch Series

KLS7-MS-202-A2 Miniature Toggle Switch Series

SPECIFICATIONS

Rating: 5A 125VAC; 2A 250VAC
Contact Resistance: 20MΩ max
Insulation Resistance:500V DC 1000MΩ Min
Dielectric Strength:1500V AC 1 Minute
Operating Temperature:-55°C~+85°C
Electrical Life :20,000 cycles



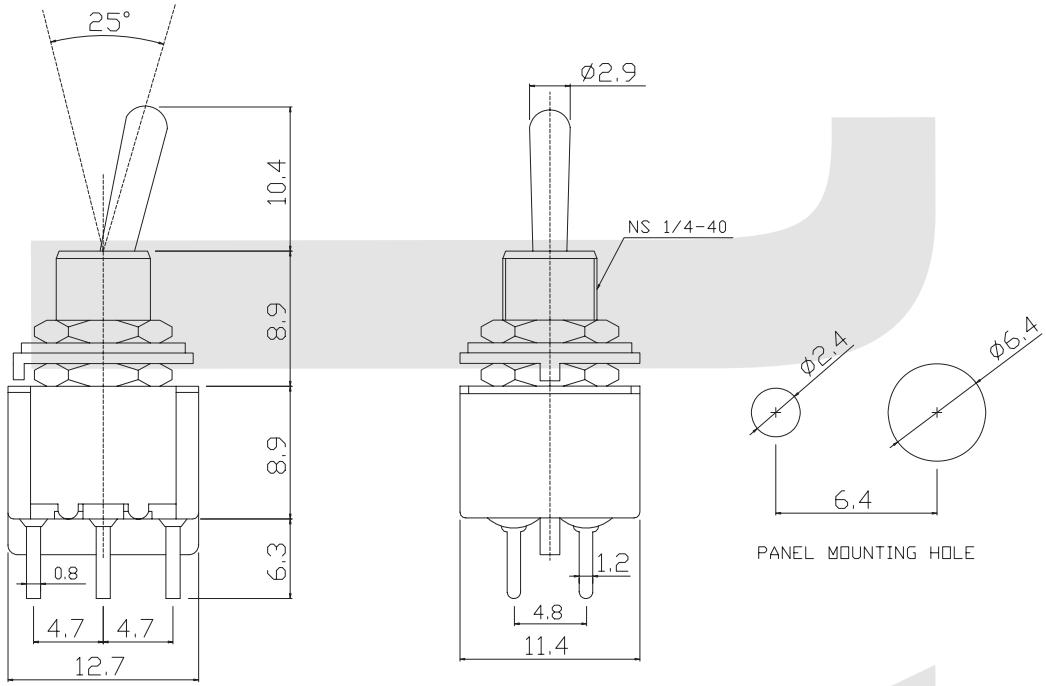

ORDER INFORMATION

KLS7- MS-2 02-A 2 X X

Part Number

MS:Miniature Toggle Switch Series

POLES: 1=Single Pole
2=Double Pole

CIRCUIT: 01=ON-OFF
02=ON-ON
03=ON-OFF-ON

BRACKET: T=With Bracket None=Without Bracket

Handle Cap Type: R=Red B=Black W=White
Y=Yello G=Green BL=Blue

Terminal Type: 1=Solder terminal 2=Pc terminal
3=Pc-H terminal 4=Pc-V terminal

Handle Type: A=Standard C=Short

Toggle Switch Series

KLS7-MS-202-A2T Miniature Toggle Switch Series

SPECIFICATIONS

Rating: 5A 125VAC; 2A 250VAC
Contact Resistance: 20MΩ max
Insulation Resistance:500V DC 1000MΩ Min
Dielectric Strength:1500V AC 1 Minute
Operating Temperature:-55°C~+85°C
Electrical Life :20,000 cycles



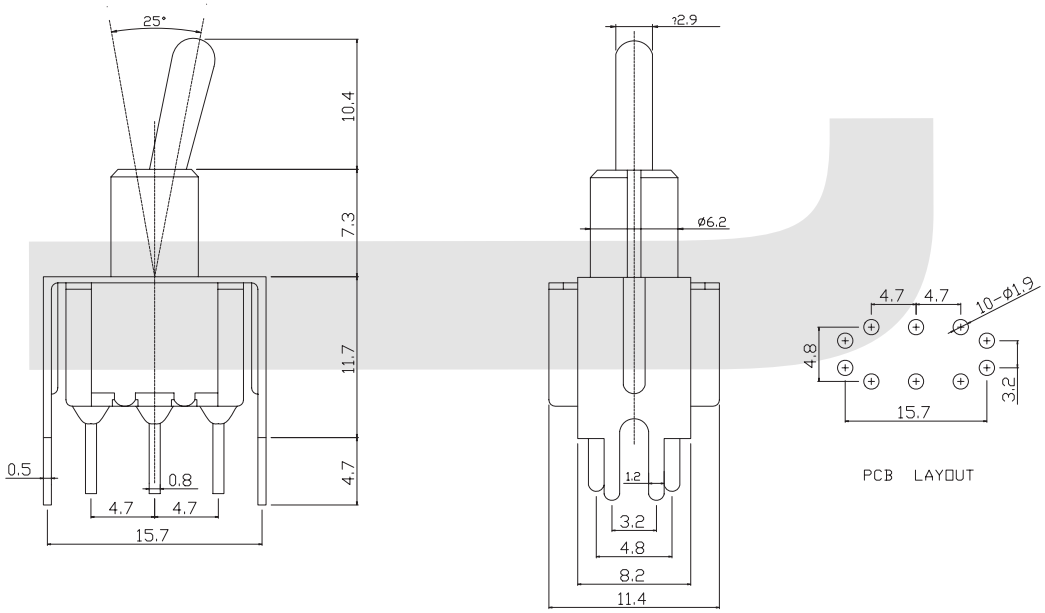

ORDER INFORMATION

KLS7- MS-2 02-A 2 X T

Part Number

MS:Miniature Toggle Switch Series

POLES: 1=Single Pole
2=Double Pole

CIRCUIT: 01=ON-OFF
02=ON-ON
03=ON-OFF-ON

BRACKET: T=With Bracket None=Without Bracket

Handle Cap Type: R=Red B=Black W=White
Y=Yello G=Green BL=Blue

Terminal Type: 1=Solder terminal 2=Pc terminal
3=Pc-H terminal 4=Pc-V terminal

Handle Type: A=Standard C=Short

Toggle Switch Series

KLS7-MS-202-C3 Miniature Toggle Switch Series

SPECIFICATIONS

Rating: 5A 125VAC; 2A 250VAC
Contact Resistance: 20MΩ max
Insulation Resistance:500V DC 1000MΩ Min
Dielectric Strength:1500V AC 1 Minute
Operating Temperature:-55°C~+85°C
Electrical Life :20,000 cycles



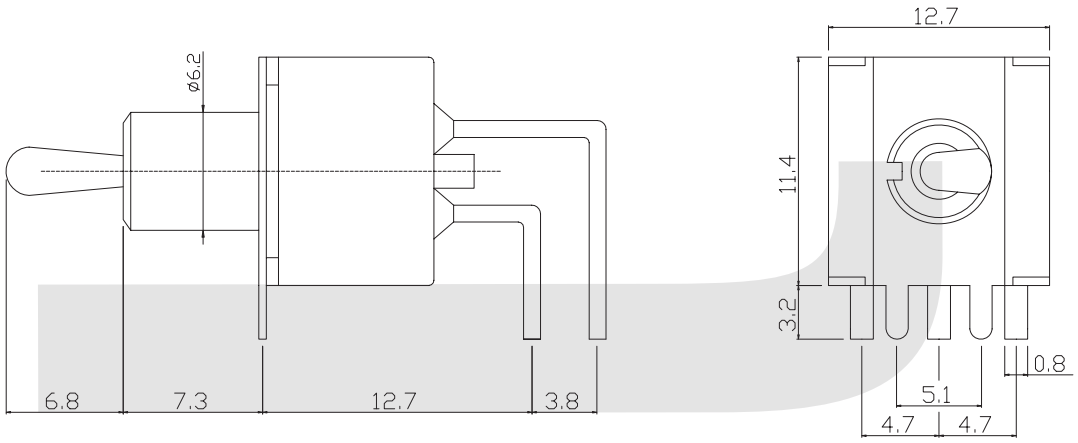

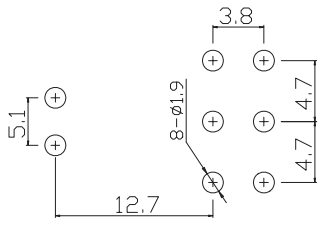

PCB LAYOUT

ORDER INFORMATION

KLS7- MS-2 02-C 3 X X

Part Number

MS:Miniature Toggle Switch Series

POLES: 1=Single Pole
2=Double Pole

CIRCUIT: 01=ON-OFF
02=ON-ON
03=ON-OFF-ON

BRACKET: T=With Bracket None=Without Bracket

Handle Cap Type: R=Red B=Black W=White
Y=Yello G=Green BL=Blue

Terminal Type: 1=Solder terminal 2=Pc terminal
3=Pc-H terminal 4=Pc-V terminal

Handle Type: A=Standard C=Short

Toggle Switch Series

KLS7-MS-202-C4 Miniature Toggle Switch Series

SPECIFICATIONS

Rating: 5A 125VAC; 2A 250VAC
Contact Resistance: 20MΩ max
Insulation Resistance:500V DC 1000MΩ Min
Dielectric Strength:1500V AC 1 Minute
Operating Temperature:-55°C~+85°C
Electrical Life :20,000 cycles



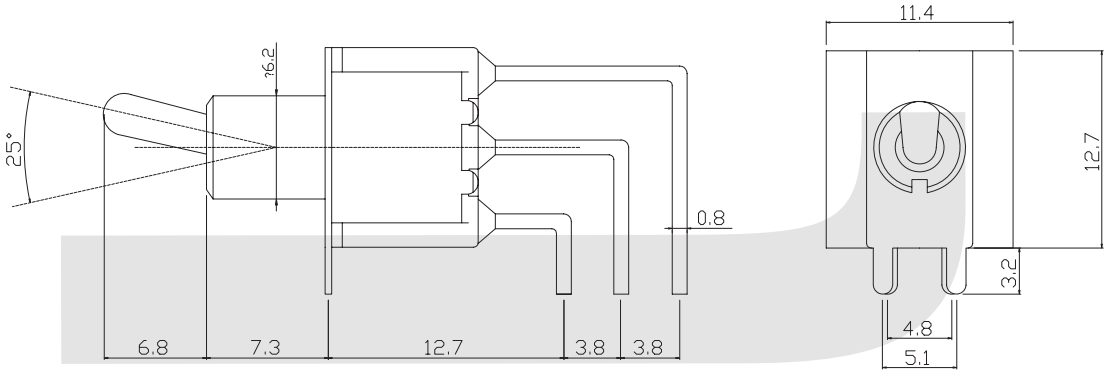

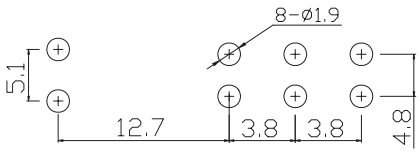

PCB LAYOUT

ORDER INFORMATION

KLS7- MS-2 02-C 4 X X

Part Number

MS:Miniature Toggle Switch Series

POLES: 1=Single Pole
2=Double Pole

CIRCUIT: 01=ON-OFF
02=ON-ON
03=ON-OFF-ON

BRACKET: T=With Bracket None=Without Bracket

Handle Cap Type: R=Red B=Black W=White
Y=Yello G=Green BL=Blue

Terminal Type: 1=Solder terminal 2=Pc terminal
3=Pc-H terminal 4=Pc-V terminal

Handle Type: A=Standard C=Short

Toggle Switch Series

KLS7-MS-402-A1 Miniature Toggle Switch Series

SPECIFICATIONS

Rating: 5A 125VAC; 2A 250VAC
Contact Resistance: 20MΩ max
Insulation Resistance:500V DC 1000MΩ Min
Dielectric Strength:1500V AC 1 Minute
Operating Temperature:-55°C~+85°C
Electrical Life :20,000 cycles



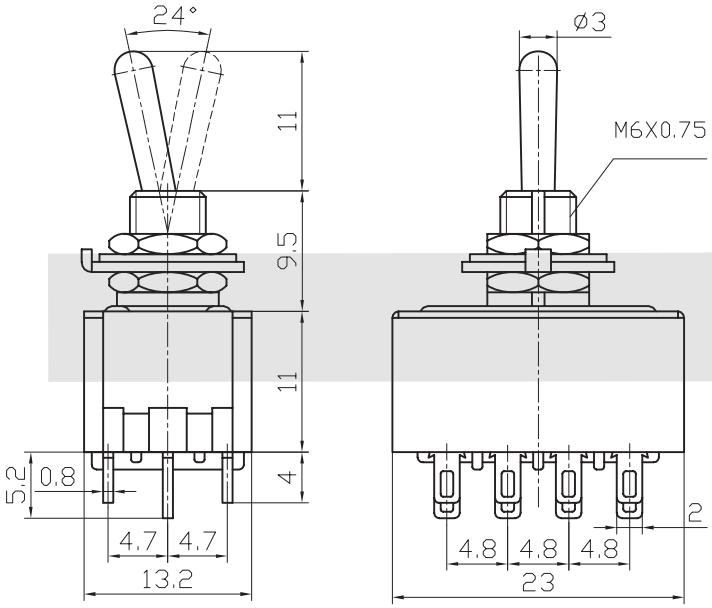

Mounting

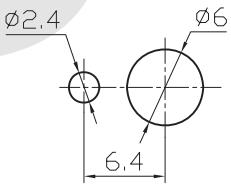

ORDER INFORMATION

KLS7- MS-4 02-A 1 X X

Part Number

MS:Miniature Toggle Switch Series

POLES: 1=Single Pole
2=Double Pole

CIRCUIT: 01=ON-OFF 12=ON-(ON)
02=ON-ON 13=ON-OFF-(ON)
03=ON-OFF-ON 23=(ON)-OFF-(ON)

Handle Type: A=Standard C=Short

Terminal Type: 1=Solder terminal 2=Pc terminal
3=Pc-H terminal 4=Pc-V terminal

Handle Cap Type: R=Red B=Black W=White
Y=Yello G=Green BL=Blue

BRACKET: T=With Bracket None=Without Bracket

Toggle Switch Series

KLS7-RLS-102-A4 Miniature Rocker Switch Series

SPECIFICATIONS

Rating: 5A 125VAC; 2A 250VAC
Contact Resistance: 20mΩ max
Insulation Resistance:500V DC 1000MΩ Min
Dielectric Strength:1500V AC 1 Minute
Operating Temperature:-55ºC~+85ºC
Electrical Life :20,000 cycles

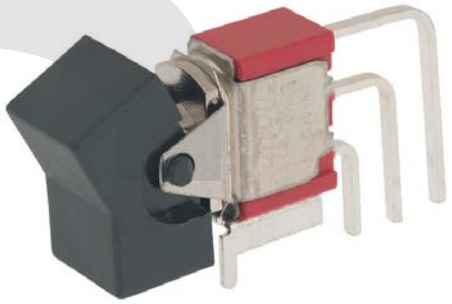

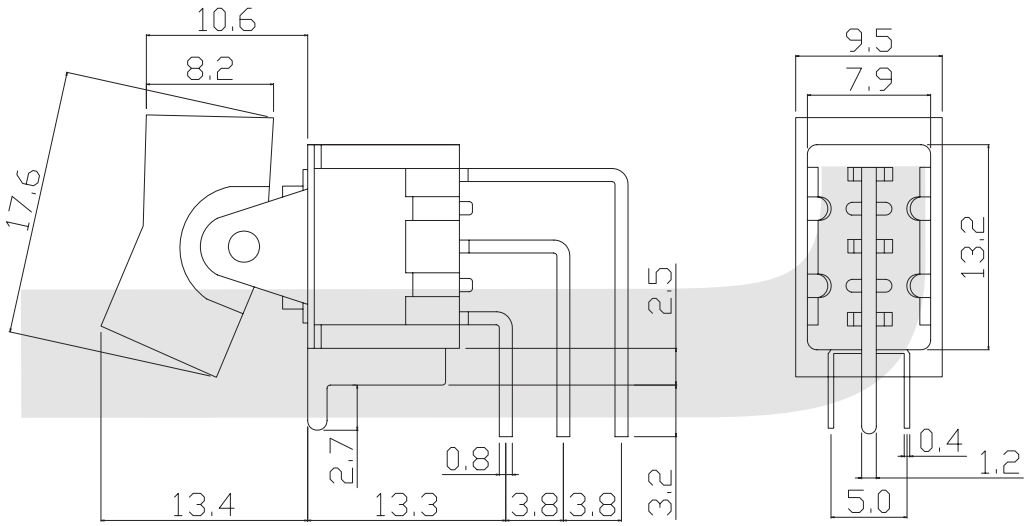

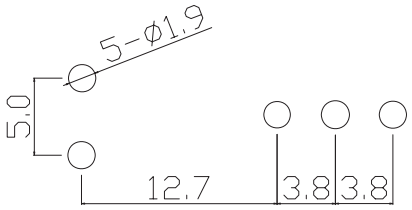

PCB LAYOUT

ORDER INFORMATION

KLS7-RLS-1 02-A 4 T

RLS:Miniature Rocker Switch Series
POLES: 1=Single Pole 2=Double Pole
CIRCUIT: 01=ON-OFF 02=ON-ON 03=ON-OFF-ON
Rocker options: A=Standard
Terminal Type: 1=Solder terminal 2=PC terminal 3=PC-H terminal 4=PC-V terminal
BRACKET: T=With Bracket None=Without Bracket

Toggle Switch Series

KLS7-SMS-101-2A1 Toggle Switch Series

SPECIFICATIONS

Rating: 3A 125VAC; 1A 250VAC
Contact Resistance: 20MΩ max
Insulation Resistance:500V DC 1000MΩ Min
Dielectric Strength:1000V AC 1 Minute
Operating Temperature:-25ºC~+65ºC
Electrical Life :20,000 cycles



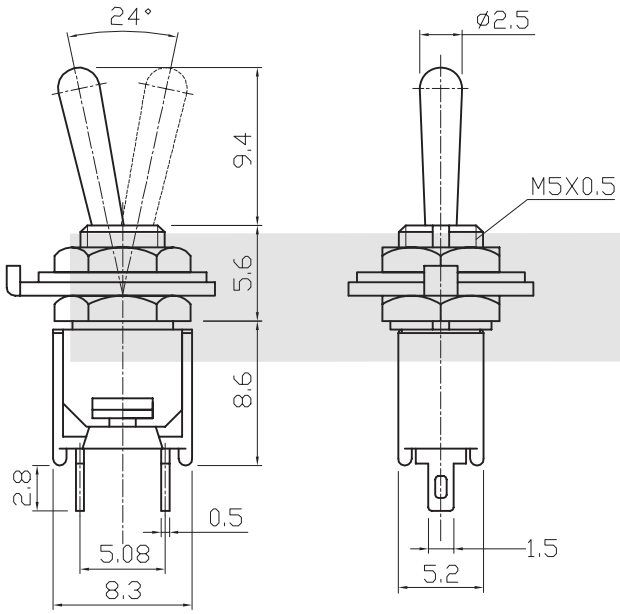

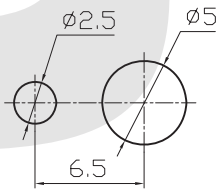

PANEL MOUNTING HOLE

ORDER INFORMATION

KLS7-SMS-1 01-2 A 1 X X

- Part Number
- SMS:Toggle Switch Series
- POLES: 1=Single Pole, 2=Double Pole
- CIRCUIT: 01=ON-OFF, 02=ON-ON, 03=ON-OFF-ON
- Product Order
- Handle Type: A=Standard C=Short
- Terminal Type: 1=Solder terminal 2=Pc terminal 3=Pc-H terminal 4=Pc-V terminal
- Handle Cap Type: R=Red B=Black W=White Y=Yello G=Green BL=Blue
- BRACKET: T=With Bracket None=Without Bracket

Toggle Switch Series

KLS7-SMS-101-A1 Toggle Switch Series

SPECIFICATIONS

Rating: 3A 125VAC; 1A 250VAC
Contact Resistance: 20MΩ max
Insulation Resistance:500V DC 1000MΩ Min
Dielectric Strength:1000V AC 1 Minute
Operating Temperature:-25ºC~+65ºC
Electrical Life :20,000 cycles



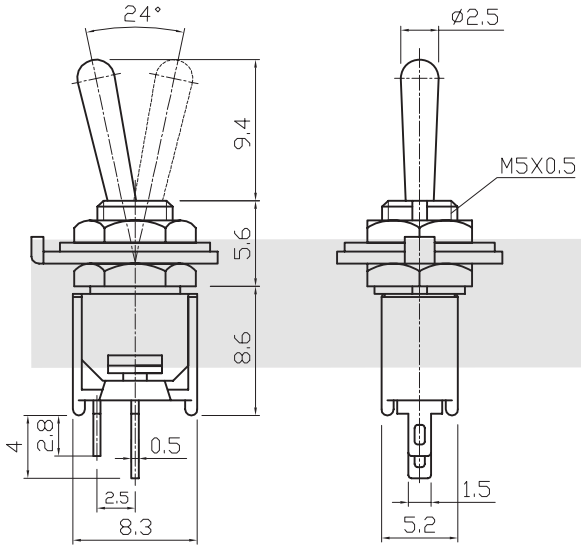

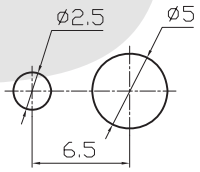

PANEL MOUNTING HOLE

ORDER INFORMATION

KLS7-SMS-1 01-A 1 X X

Part Number
SMS:Toggle Switch Series
POLES: 1=Single Pole
2=Double Pole
CIRCUIT: 01=ON-OFF
02=ON-ON
03=ON-OFF-ON

BRACKET: T=With Bracket None=Without Bracket
Handle Cap Type: R=Red B=Black W=White
Y=Yello G=Green BL=Blue
Terminal Type: 1=Solder terminal 2=Pc terminal
3=Pc-H terminal 4=Pc-V terminal
Handle Type: A=Standard C=Short

Toggle Switch Series

KLS7-SMS-101-A2 Toggle Switch Series

SPECIFICATIONS

Rating: 3A 125VAC; 1A 250VAC
Contact Resistance: 20MΩ max
Insulation Resistance:500V DC 1000MΩ Min
Dielectric Strength:1000V AC 1 Minute
Operating Temperature:-25ºC~+65ºC
Electrical Life :20,000 cycles



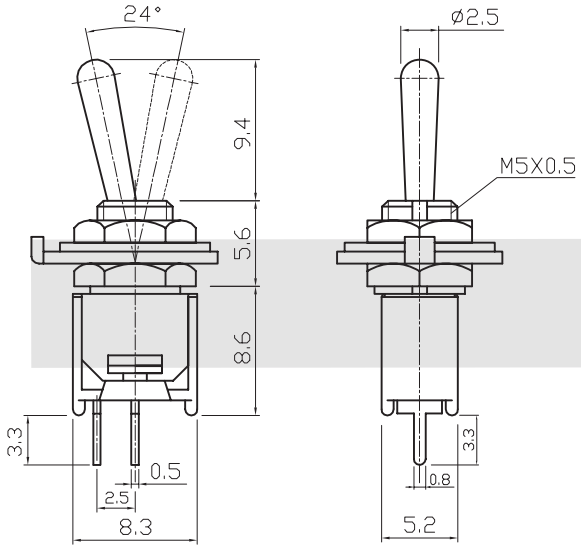

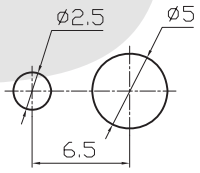

PANEL MOUNTING HOLE

ORDER INFORMATION

KLS7-SMS-1 01-A 2 X X

- Part Number
- SMS:Toggle Switch Series
- POLES: 1=Single Pole 2=Double Pole
- CIRCUIT: 01=ON-OFF 02=ON-ON 03=ON-OFF-ON
- Handle Type: A=Standard C=Short
- Terminal Type: 1=Solder terminal 2=Pc terminal 3=Pc-H terminal 4=Pc-V terminal
- Handle Cap Type: R=Red B=Black W=White Y=Yello G=Green BL=Blue
- BRACKET: T=With Bracket None=Without Bracket

Toggle Switch Series

KLS7-SMS-101-A2T Toggle Switch Series

SPECIFICATIONS

Rating: 3A 125VAC; 1A 250VAC
Contact Resistance: 20MΩ max
Insulation Resistance:500V DC 1000MΩ Min
Dielectric Strength:1000V AC 1 Minute
Operating Temperature:-25°C~+65°C
Electrical Life :20,000 cycles



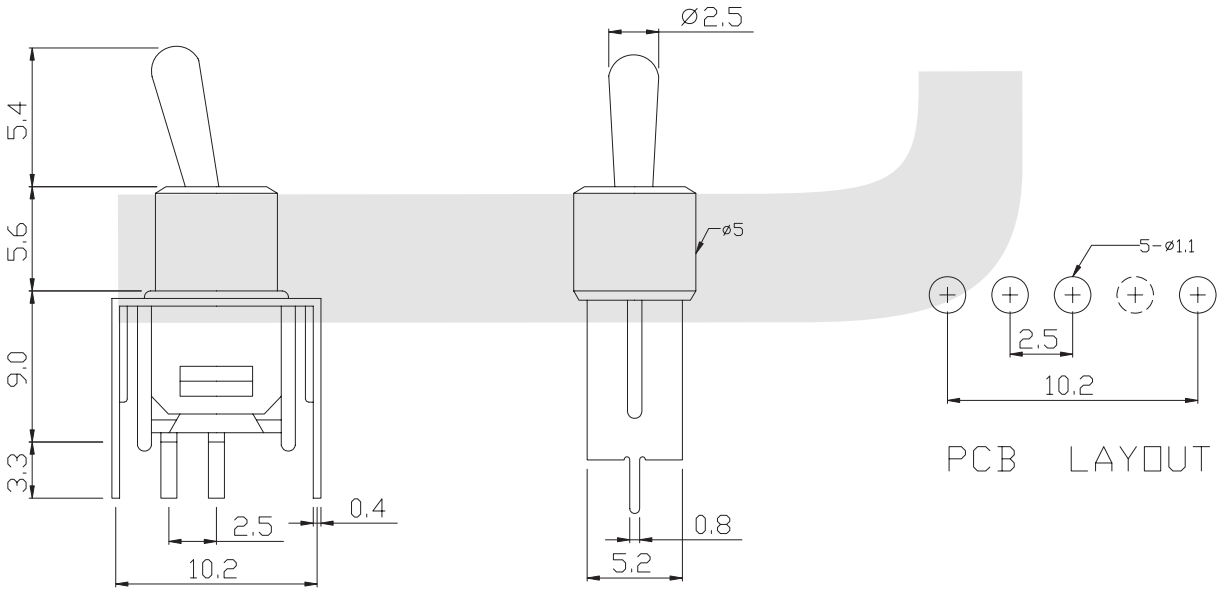

ORDER INFORMATION

KLS7-SMS-1 01-A 2 X T

Part Number
SMS:Toggle Switch Series
POLES: 1=Single Pole
2=Double Pole
CIRCUIT: 01=ON-OFF
02=ON-ON
03=ON-OFF-ON
BRACKET: T=With Bracket None=Without Bracket
Handle Cap Type: R=Red B=Black W=White
Y=Yello G=Green BL=Blue
Terminal Type: 1=Solder terminal 2=Pc terminal
3=Pc-H terminal 4=Pc-V terminal
Handle Type: A=Standard C=Short

Toggle Switch Series

KLS7-SMS-101-C3 Toggle Switch Series

SPECIFICATIONS

Rating: 3A 125VAC; 1A 250VAC
Contact Resistance: 20MΩ max
Insulation Resistance:500V DC 1000MΩ Min
Dielectric Strength:1000V AC 1 Minute
Operating Temperature:-25°C~+65°C
Electrical Life :20,000 cycles



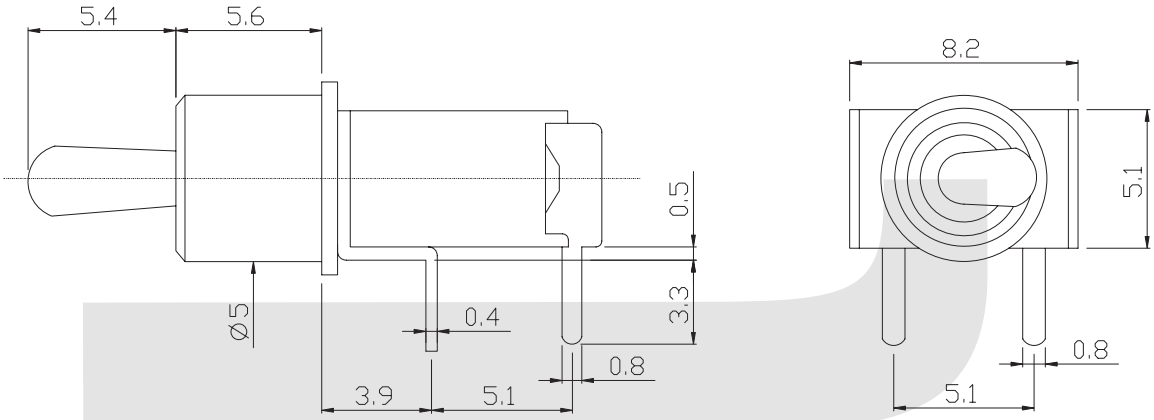

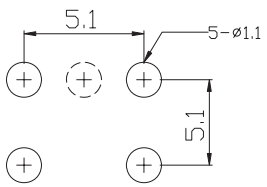

PCB LAYOUT

ORDER INFORMATION

KLS7-SMS-1 01-C 3 X X

- Part Number
- SMS:Toggle Switch Series
- POLES: 1=Single Pole 2=Double Pole
- CIRCUIT: 01=ON-OFF 02=ON-ON 03=ON-OFF-ON
- Handle Type: A=Standard C=Short
- Terminal Type: 1=Solder terminal 2=Pc terminal 3=Pc-H terminal 4=Pc-V terminal
- Handle Cap Type: R=Red B=Black W=White Y=Yello G=Green BL=Blue
- BRACKET: T=With Bracket None=Without Bracket

Toggle Switch Series

KLS7-SMS-101-C4 Toggle Switch Series

SPECIFICATIONS

Rating: 3A 125VAC; 1A 250VAC
Contact Resistance: 20MΩ max
Insulation Resistance:500V DC 1000MΩ Min
Dielectric Strength:1000V AC 1 Minute
Operating Temperature:-25°C~+65°C
Electrical Life :20,000 cycles



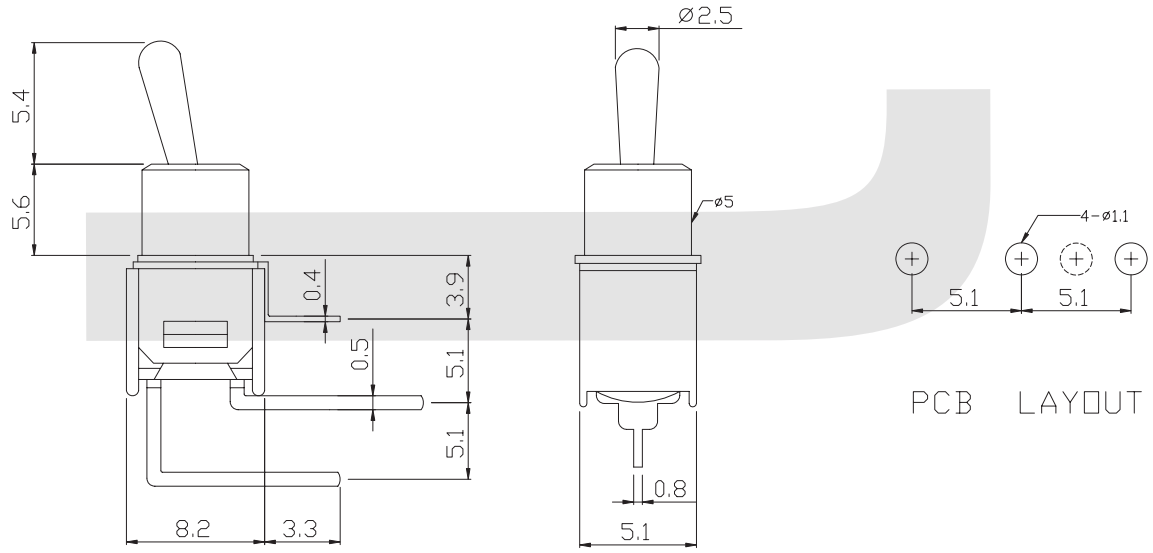

ORDER INFORMATION

KLS7-SMS-1 01-C 4 X X

Part Number
SMS:Toggle Switch Series
POLES: 1=Single Pole
2=Double Pole
CIRCUIT: 01=ON-OFF
02=ON-ON
03=ON-OFF-ON
BRACKET: T=With Bracket None=Without Bracket
Handle Cap Type: R=Red B=Black W=White
Y=Yello G=Green BL=Blue
Terminal Type: 1=Solder terminal 2=Pc terminal
3=Pc-H terminal 4=Pc-V terminal
Handle Type: A=Standard C=Short

Toggle Switch Series

KLS7-SMS-102-A1 Toggle Switch Series

SPECIFICATIONS

Rating: 3A 125VAC; 1A 250VAC
Contact Resistance: 20MΩ max
Insulation Resistance:500V DC 1000MΩ Min
Dielectric Strength:1000V AC 1 Minute
Operating Temperature:-25°C~+65°C
Electrical Life :20,000 cycles



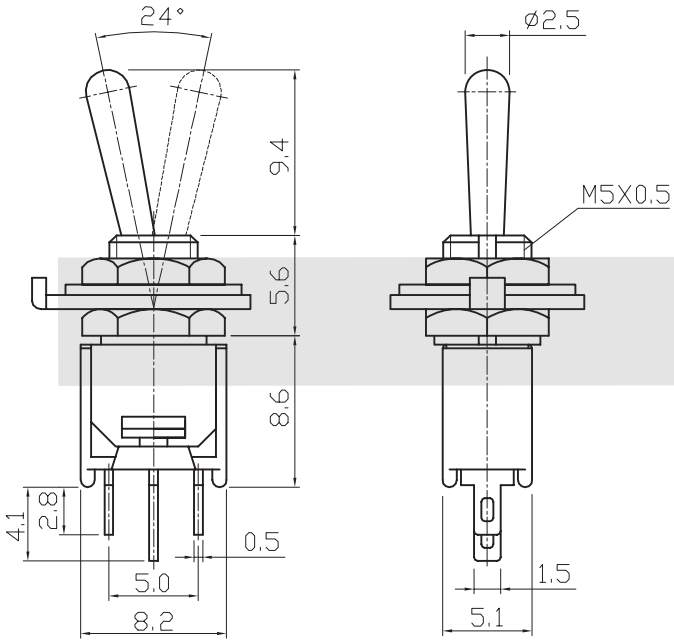

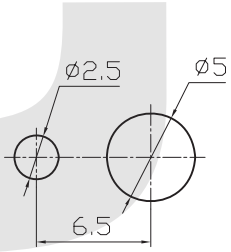

PANEL MOUNTING HOLE

ORDER INFORMATION

KLS7-SMS-1 02-A 1 X X

Part Number
SMS:Toggle Switch Series
POLES: 1=Single Pole
2=Double Pole
CIRCUIT: 01=ON-OFF
02=ON-ON
03=ON-OFF-ON
BRACKET: T=With Bracket None=Without Bracket
Handle Cap Type: R=Red B=Black W=White
Y=Yello G=Green BL=Blue
Terminal Type: 1=Solder terminal 2=Pc terminal
3=Pc-H terminal 4=Pc-V terminal
Handle Type: A=Standard C=Short

Toggle Switch Series

KLS7-SMS-102-A2 Toggle Switch Series

SPECIFICATIONS

Rating: 3A 125VAC; 1A 250VAC
Contact Resistance: 20MΩ max
Insulation Resistance:500V DC 1000MΩ Min
Dielectric Strength:1000V AC 1 Minute
Operating Temperature:-25°C~+65°C
Electrical Life :20,000 cycles



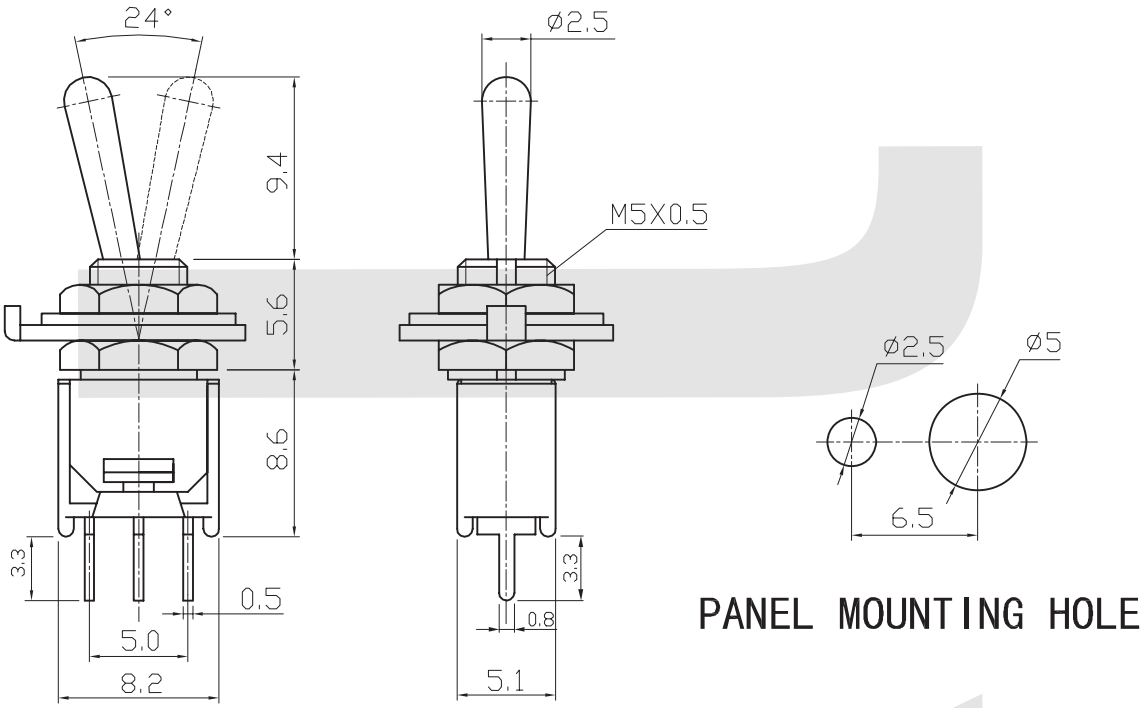

ORDER INFORMATION

KLS7-SMS-1 02-A 2 X X

- Part Number
- SMS:Toggle Switch Series
- POLES: 1=Single Pole 2=Double Pole
- CIRCUIT: 01=ON-OFF 02=ON-ON 03=ON-OFF-ON
- Terminal Type: 1=Solder terminal 2=Pc terminal 3=Pc-H terminal 4=Pc-V terminal
- Handle Type: A=Standard C=Short
- Handle Cap Type: R=Red B=Black W=White Y=Yello G=Green BL=Blue
- BRACKET: T=With Bracket None=Without Bracket

Toggle Switch Series

KLS7-SMS-102-A2T Toggle Switch Series

SPECIFICATIONS

Rating: 3A 125VAC; 1A 250VAC
Contact Resistance: 20MΩ max
Insulation Resistance:500V DC 1000MΩ Min
Dielectric Strength:1000V AC 1 Minute
Operating Temperature:-25°C~+65°C
Electrical Life :20,000 cycles



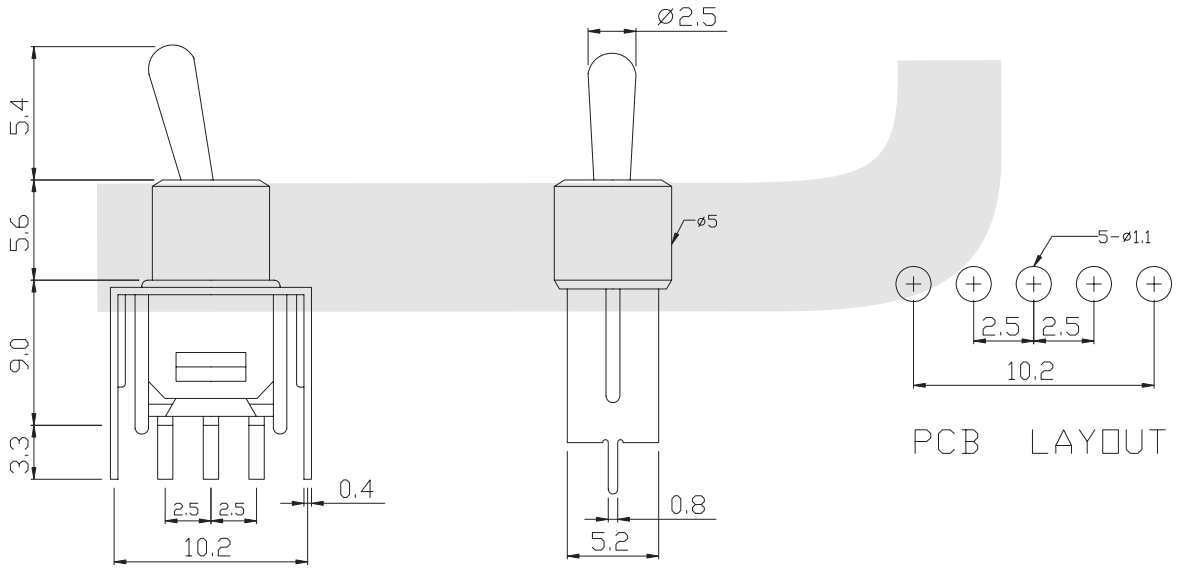

ORDER INFORMATION

KLS7-SMS-1 02-A 2 X T

- Part Number
- SMS:Toggle Switch Series
- POLES: 1=Single Pole 2=Double Pole
- CIRCUIT: 01=ON-OFF 02=ON-ON 03=ON-OFF-ON
- Handle Type: A=Standard C=Short
- Terminal Type: 1=Solder terminal 2=Pc terminal 3=Pc-H terminal 4=Pc-V terminal
- Handle Cap Type: R=Red B=Black W=White Y=Yello G=Green BL=Blue
- BRACKET: T=With Bracket None=Without Bracket

Toggle Switch Series

KLS7-SMS-102-C3 Toggle Switch Series

SPECIFICATIONS

Rating: 3A 125VAC; 1A 250VAC
Contact Resistance: 20MΩ max
Insulation Resistance:500V DC 1000MΩ Min
Dielectric Strength:1000V AC 1 Minute
Operating Temperature:-25°C~+65°C
Electrical Life :20,000 cycles



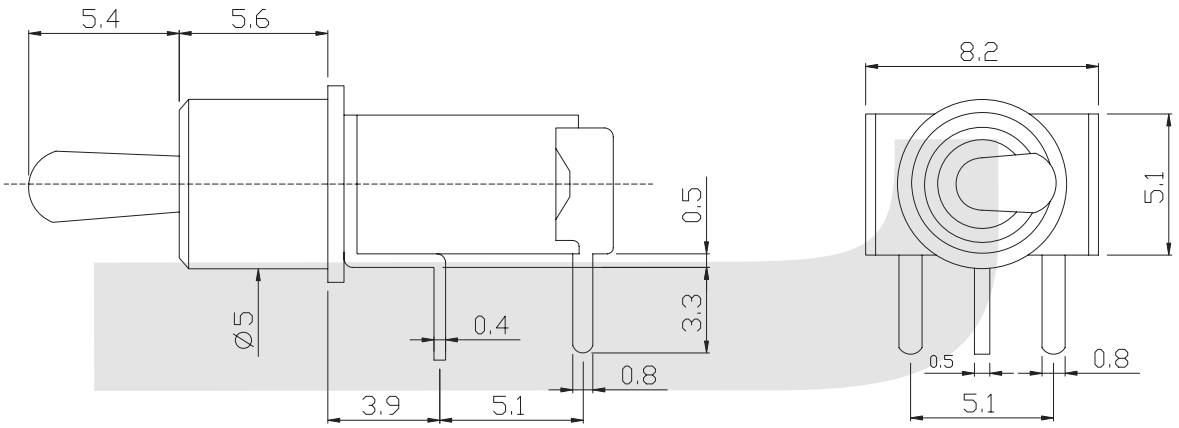

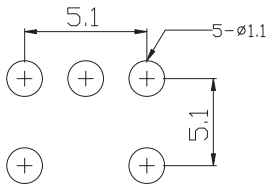

PCB LAYOUT

ORDER INFORMATION

KLS7-SMS-1 02-C 3 X X

- Part Number
- SMS:Toggle Switch Series
- POLES: 1=Single Pole 2=Double Pole
- CIRCUIT: 01=ON-OFF 02=ON-ON 03=ON-OFF-ON
- Handle Type: A=Standard C=Short
- Terminal Type: 1=Solder terminal 2=Pc terminal 3=Pc-H terminal 4=Pc-V terminal
- Handle Cap Type: R=Red B=Black W=White Y=Yello G=Green BL=Blue
- BRACKET: T=With Bracket None=Without Bracket

Toggle Switch Series

KLS7-SMS-102-C4 Toggle Switch Series

SPECIFICATIONS

Rating: 3A 125VAC; 1A 250VAC
Contact Resistance: 20MΩ max
Insulation Resistance:500V DC 1000MΩ Min
Dielectric Strength:1000V AC 1 Minute
Operating Temperature:-25ºC~+65ºC
Electrical Life :20,000 cycles



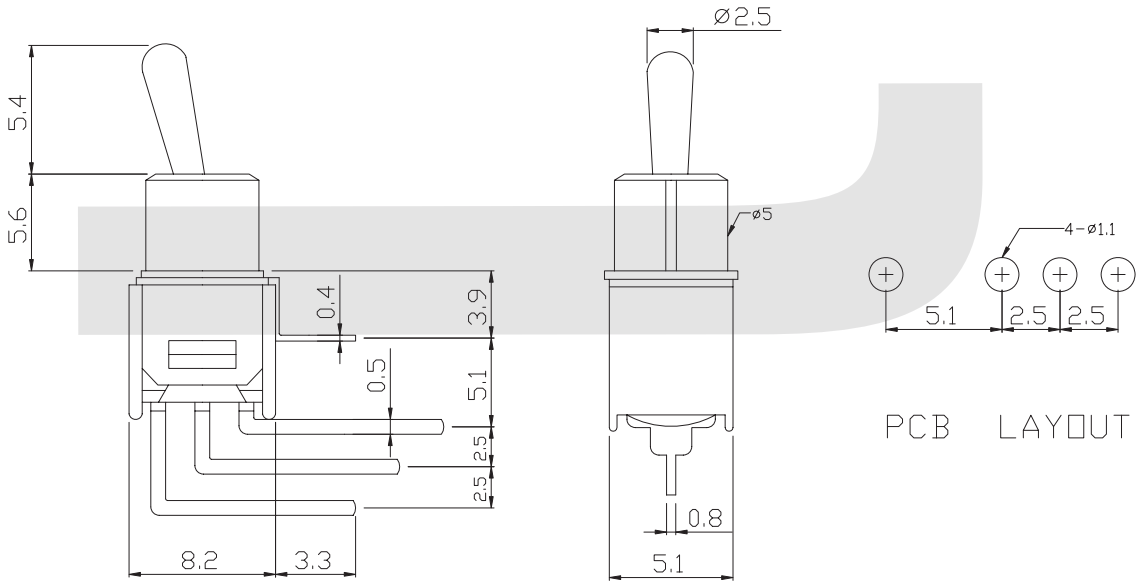

ORDER INFORMATION

KLS7-SMS-1 02-C 4 X X

Part Number
SMS:Toggle Switch Series
POLES: 1=Single Pole
2=Double Pole
CIRCUIT: 01=ON-OFF
02=ON-ON
03=ON-OFF-ON
Terminal Type: 1=Solder terminal 2=Pc terminal
3=Pc-H terminal 4=Pc-V terminal
Handle Type: A=Standard C=Short
Handle Cap Type: R=Red B=Black W=White
Y=Yello G=Green BL=Blue
BRACKET: T=With Bracket None=Without Bracket

Toggle Switch Series

KLS7-SMS-201-2A1 Toggle Switch Series

SPECIFICATIONS

Rating: 3A 125VAC; 1A 250VAC
Contact Resistance: 20MΩ max
Insulation Resistance:500V DC 1000MΩ Min
Dielectric Strength:1000V AC 1 Minute
Operating Temperature:-25ºC~+65ºC
Electrical Life :20,000 cycles



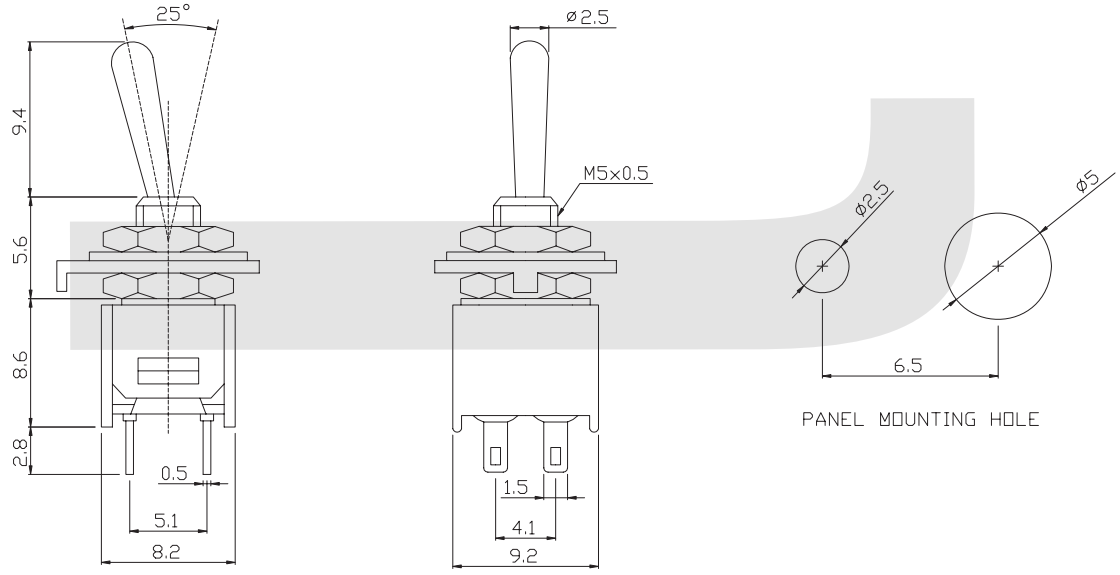

ORDER INFORMATION

KLS7-SMS-2 01- 2 A 1 X X

Part Number

SMS:Toggle Switch Series

POLES: 1=Single Pole
2=Double Pole

CIRCUIT: 01=ON-OFF
02=ON-ON
03=ON-OFF-ON

BRACKET: T=With Bracket None=Without Bracket

Handle Cap Type: R=Red B=Black W=White
Y=Yello G=Green BL=Blue

Terminal Type: 1=Solder terminal 2=Pc terminal
3=Pc-H terminal 4=Pc-V terminal

Handle Type: A=Standard C=Short

Product Order

Toggle Switch Series

KLS7-SMS-201-A1 Toggle Switch Series

SPECIFICATIONS

Rating: 3A 125VAC; 1A 250VAC
Contact Resistance: 20MΩ max
Insulation Resistance:500V DC 1000MΩ Min
Dielectric Strength:1000V AC 1 Minute
Operating Temperature:-25ºC~+65ºC
Electrical Life :20,000 cycles



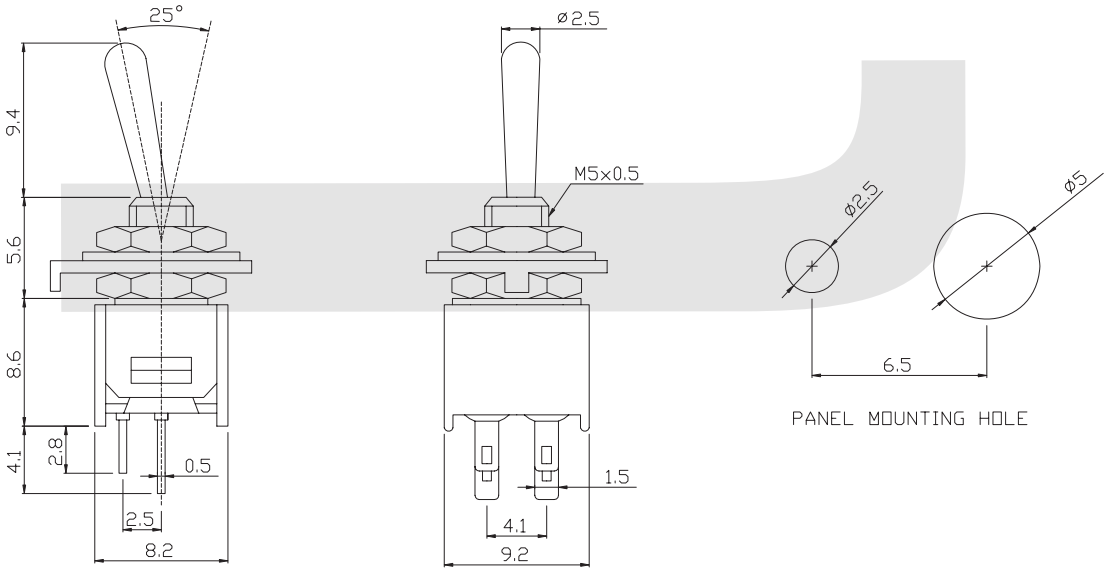

ORDER INFORMATION

KLS7-SMS-2 01-A 1 X X

Part Number
SMS:Toggle Switch Series
POLES: 1=Single Pole
2=Double Pole
CIRCUIT: 01=ON-OFF
02=ON-ON
03=ON-OFF-ON
Handle Type: A=Standard C=Short
Terminal Type: 1=Solder terminal 2=Pc terminal
3=Pc-H terminal 4=Pc-V terminal
Handle Cap Type: R=Red B=Black W=White
Y=Yello G=Green BL=Blue
BRACKET: T=With Bracket None=Without Bracket

Toggle Switch Series

KLS7-SMS-202-A2 Toggle Switch Series

SPECIFICATIONS

Rating: 3A 125VAC; 1A 250VAC
Contact Resistance: 20MΩ max
Insulation Resistance:500V DC 1000MΩ Min
Dielectric Strength:1000V AC 1 Minute
Operating Temperature:-25°C~+65°C
Electrical Life :20,000 cycles



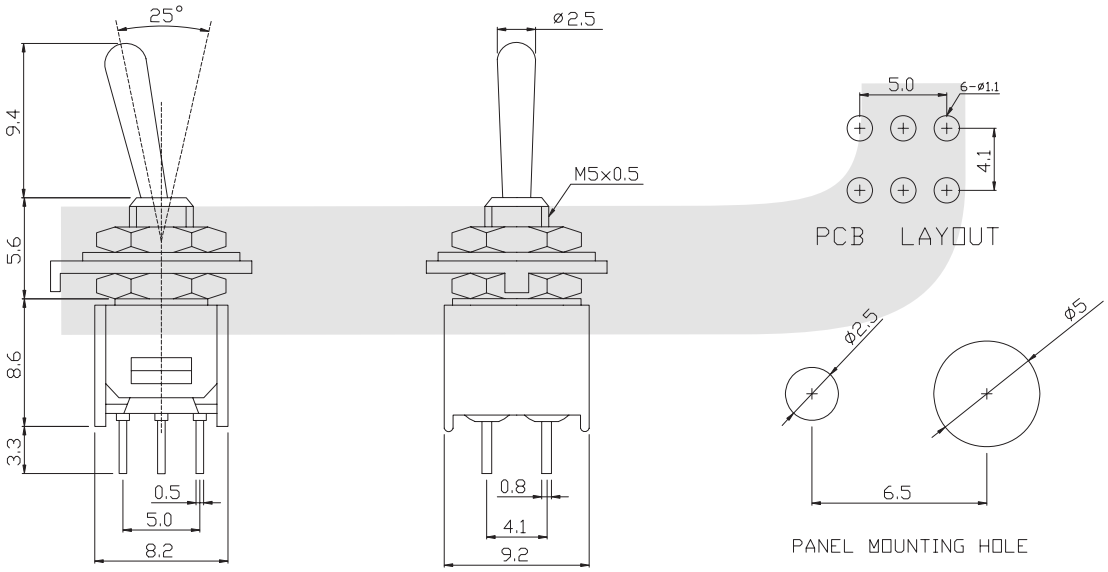

ORDER INFORMATION

KLS7-SMS-2 02-A 2 X X

Part Number

SMS:Toggle Switch Series

POLES: 1=Single Pole
2=Double Pole

CIRCUIT: 01=ON-OFF
02=ON-ON
03=ON-OFF-ON

BRACKET: T=With Bracket None=Without Bracket

Handle Cap Type: R=Red B=Black W=White
Y=Yello G=Green BL=Blue

Terminal Type: 1=Solder terminal 2=Pc terminal
3=Pc-H terminal 4=Pc-V terminal

Handle Type: A=Standard C=Short

Toggle Switch Series

KLS7-SMS-202-A2T Toggle Switch Series

SPECIFICATIONS

Rating: 3A 125VAC; 1A 250VAC
Contact Resistance: 20MΩ max
Insulation Resistance:500V DC 1000MΩ Min
Dielectric Strength:1000V AC 1 Minute
Operating Temperature:-25ºC~+65ºC
Electrical Life :20,000 cycles



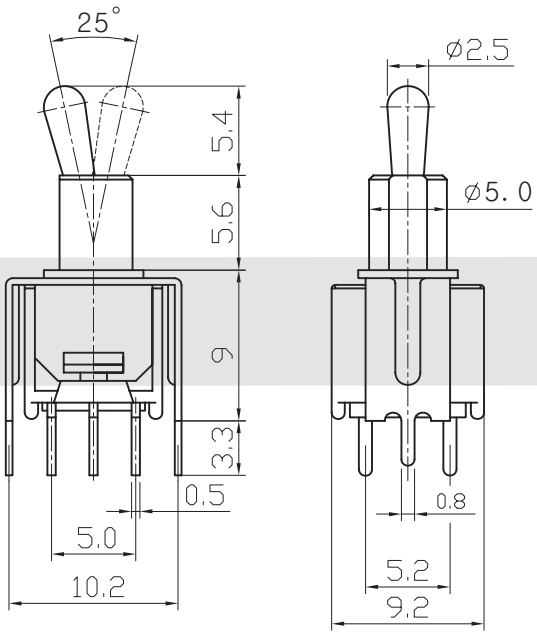

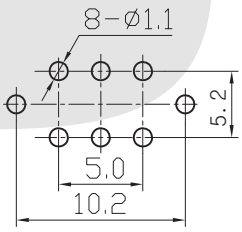

PCB LAYOUT

ORDER INFORMATION

KLS7-SMS-2 02-A 2 X T

- Part Number
- SMS:Toggle Switch Series
- POLES: 1=Single Pole 2=Double Pole
- CIRCUIT: 01=ON-OFF 02=ON-ON 03=ON-OFF-ON
- Handle Type: A=Standard C=Short
- Terminal Type: 1=Solder terminal 2=Pc terminal 3=Pc-H terminal 4=Pc-V terminal
- Handle Cap Type: R=Red B=Black W=White Y=Yello G=Green BL=Blue
- BRACKET: T=With Bracket None=Without Bracket

Toggle Switch Series

KLS7-SMS-202-C3 Toggle Switch Series

SPECIFICATIONS

Rating: 3A 125VAC; 1A 250VAC
Contact Resistance: 20MΩ max
Insulation Resistance:500V DC 1000MΩ Min
Dielectric Strength:1000V AC 1 Minute
Operating Temperature:-25ºC~+65ºC
Electrical Life :20,000 cycles



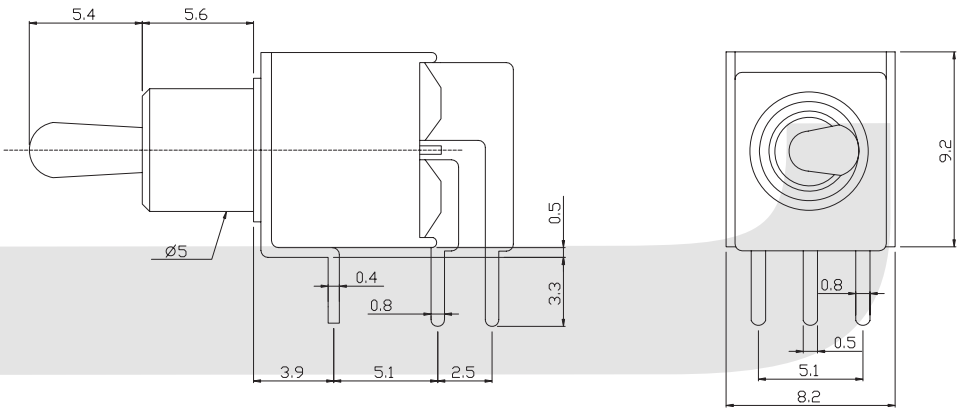

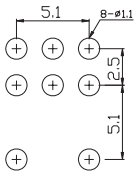

PCB LAYOUT

ORDER INFORMATION

KLS7-SMS-2 02-C 3 X X

Part Number

SMS:Toggle Switch Series

POLES: 1=Single Pole
2=Double Pole

CIRCUIT: 01=ON-OFF
02=ON-ON
03=ON-OFF-ON

BRACKET: T=With Bracket None=Without Bracket

Handle Cap Type: R=Red B=Black W=White
Y=Yello G=Green BL=Blue

Terminal Type: 1=Solder terminal 2=Pc terminal
3=Pc-H terminal 4=Pc-V terminal

Handle Type: A=Standard C=Short

Toggle Switch Series

KLS7-SMS-202-C4 Toggle Switch Series

SPECIFICATIONS

Rating: 3A 125VAC; 1A 250VAC
Contact Resistance: 20MΩ max
Insulation Resistance:500V DC 1000MΩ Min
Dielectric Strength:1000V AC 1 Minute
Operating Temperature:-25ºC~+65ºC
Electrical Life :20,000 cycles



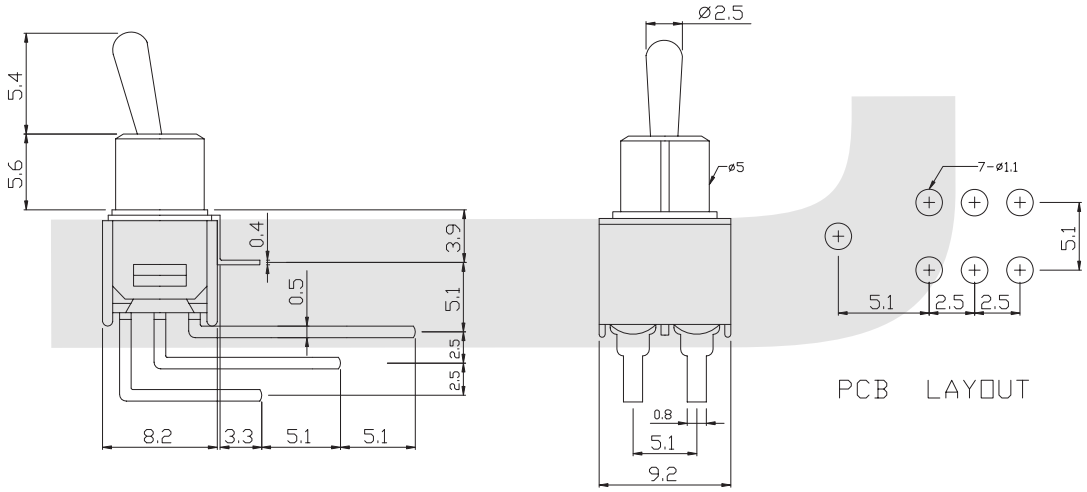

ORDER INFORMATION

KLS7-SMS-2 02-C 4 X X

- Part Number
- SMS:Toggle Switch Series
- POLES: 1=Single Pole 2=Double Pole
- CIRCUIT: 01=ON-OFF 02=ON-ON 03=ON-OFF-ON
- Handle Type: A=Standard C=Short
- Terminal Type: 1=Solder terminal 2=Pc terminal 3=Pc-H terminal 4=Pc-V terminal
- Handle Cap Type: R=Red B=Black W=White Y=Yello G=Green BL=Blue
- BRACKET: T=With Bracket None=Without Bracket

Toggle Switch Series

KLS7-SRLS-102-A1 Sub-miniature Rocker Switch Series

SPECIFICATIONS

Rating: 3A 125VAC; 1A 250VAC
Contact Resistance: 20MΩ max
Insulation Resistance:500V DC 1000MΩ Min
Dielectric Strength:1000V AC 1 Minute
Operating Temperature:-25°C~+65°C
Electrical Life :20,000 cycles



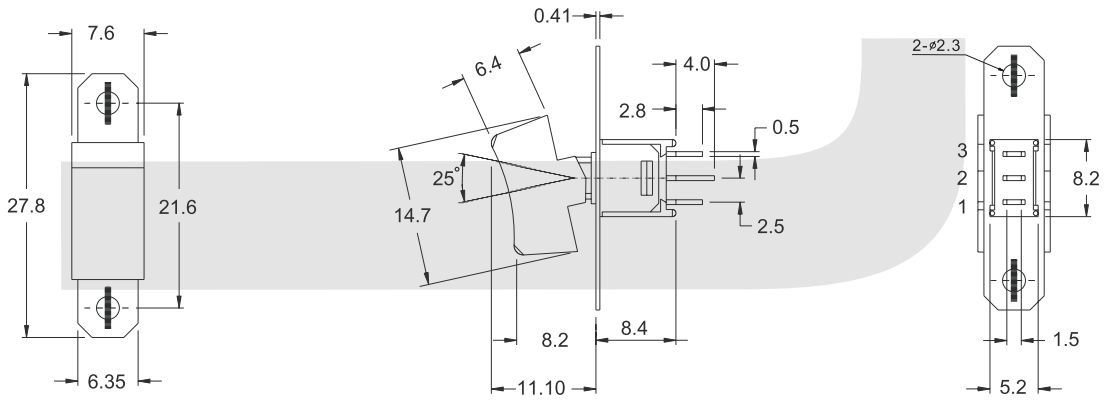

ORDER INFORMATION

KLS7-SRLS-1 02-A 1 X X

- Part Number
- SRLS:Sub-miniature Rocker Switch Series
- POLES: 1=Single Pole 2=Double Pole
- CIRCUIT: 01=ON-OFF 02=ON-ON 03=ON-OFF-ON
- Handle Type: A=Standard C=Short
- Terminal Type: 1=Solder terminal 2=Pc terminal 3=Pc-H terminal 4=Pc-V terminal
- Handle Cap Type: R=Red B=Black W=White Y=Yello G=Green BL=Blue
- BRACKET: T=With Bracket None=Without Bracket

Toggle Switch Series

KLS7-SRLS-102-A3 Sub-miniature Rocker Switch Series

SPECIFICATIONS

Rating: 3A 125VAC; 1A 250VAC
Contact Resistance: 20MΩ max
Insulation Resistance:500V DC 1000MΩ Min
Dielectric Strength:1000V AC 1 Minute
Operating Temperature:-25ºC~+65ºC
Electrical Life :20,000 cycles



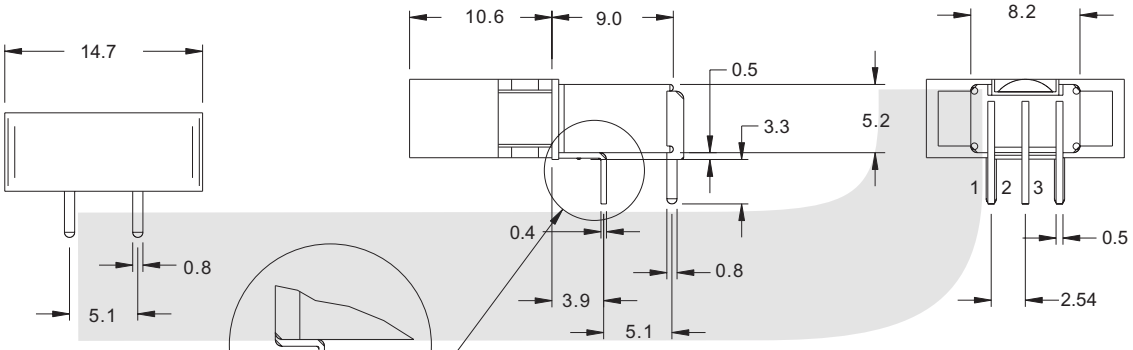

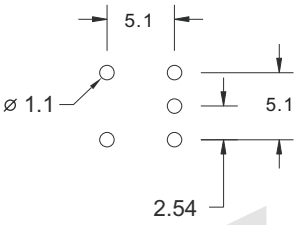

PCB LAYOUT

ORDER INFORMATION

KLS7-SRLS-1 02-A 3 X X

Part Number

SRLS:Sub-miniature Rocker Switch Series

POLES: 1=Single Pole 2=Double Pole

CIRCUIT: 01=ON-OFF 02=ON-ON 03=ON-OFF-ON

BRACKET: T=With Bracket None=Without Bracket

Handle Cap Type: R=Red B=Black W=White Y=Yello G=Green BL=Blue

Terminal Type: 1=Solder terminal 2=Pc terminal 3=Pc-H terminal 4=Pc-V terminal

Handle Type: A=Standard C=Short

Toggle Switch Series

KLS7-SRLS-102-A4 Sub-miniature Rocker Switch Series

SPECIFICATIONS

Rating: 3A 125VAC; 1A 250VAC
Contact Resistance: 20MΩ max
Insulation Resistance:500V DC 1000MΩ Min
Dielectric Strength:1000V AC 1 Minute
Operating Temperature:-25ºC~+65ºC
Electrical Life :20,000 cycles



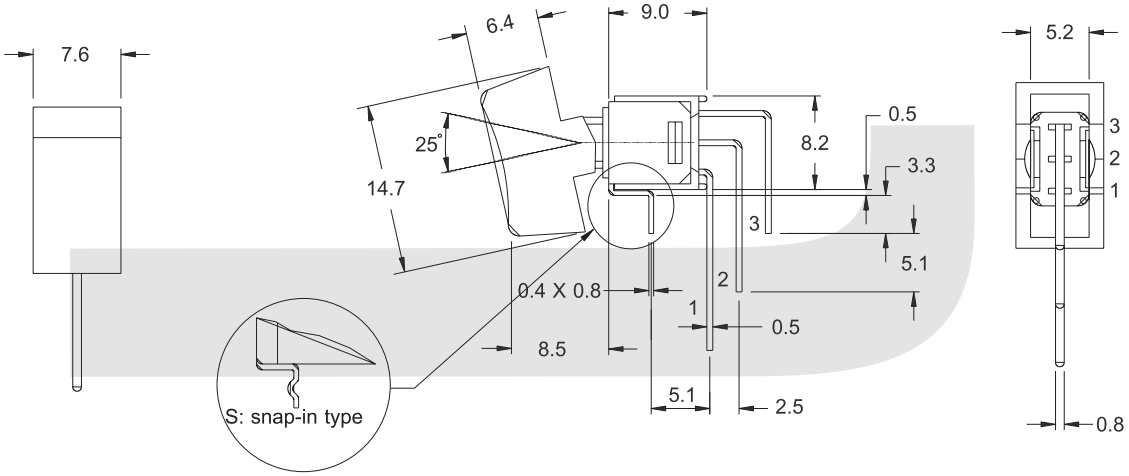

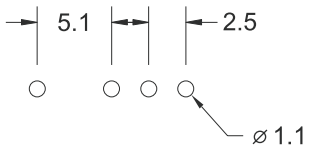

PCB LAYOUT

ORDER INFORMATION

KLS7-SRLS-1 02-A 4 X X

Part Number
SRLS:Sub-miniature Rocker Switch Series
POLES: 1=Single Pole 2=Double Pole
CIRCUIT: 01=ON-OFF 02=ON-ON 03=ON-OFF-ON
BRACKET: T=With Bracket None=Without Bracket
Handle Cap Type: R=Red B=Black W=White Y=Yello G=Green BL=Blue
Terminal Type: 1=Solder terminal 2=Pc terminal 3=Pc-H terminal 4=Pc-V terminal
Handle Type: A=Standard C=Short

Toggle Switch Series

KLS7-SRLS-202-A1 Sub-miniature Rocker Switch Series

SPECIFICATIONS

Rating: 3A 125VAC; 1A 250VAC
Contact Resistance: 20MΩ max
Insulation Resistance:500V DC 1000MΩ Min
Dielectric Strength:1000V AC 1 Minute
Operating Temperature:-25ºC~+65ºC
Electrical Life :20,000 cycles

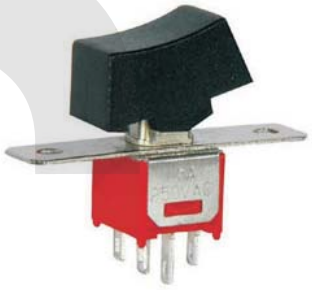

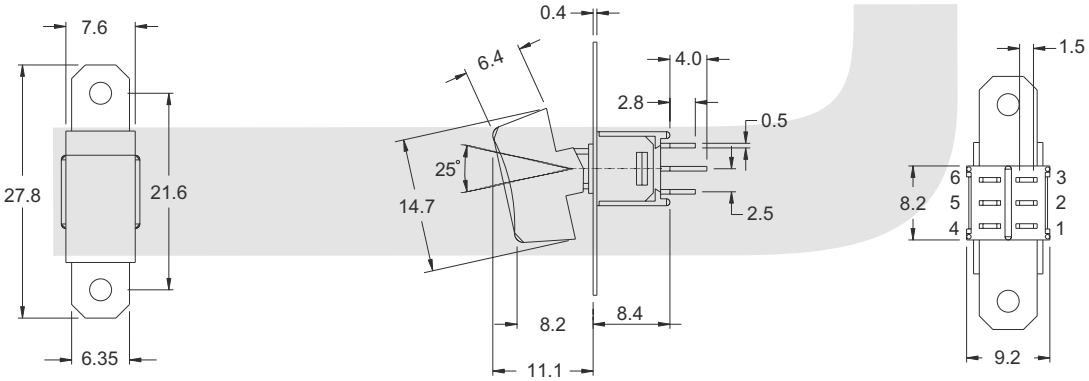

ORDER INFORMATION

KLS7-SRLS-2 02-A 1 X X

Part Number

SRLS:Sub-miniature Rocker Switch Series

POLES: 1=Single Pole
2=Double Pole

CIRCUIT: 01=ON-OFF
02=ON-ON
03=ON-OFF-ON

BRACKET: T=With Bracket None=Without Bracket

Handle Cap Type: R=Red B=Black W=White
Y=Yello G=Green BL=Blue

Terminal Type: 1=Solder terminal 2=Pc terminal
3=Pc-H terminal 4=Pc-V terminal

Handle Type: A=Standard C=Short

Toggle Switch Series

KLS7-SRLS-202-A2T Sub-miniature Rocker Switch Series

SPECIFICATIONS

Rating: 3A 125VAC; 1A 250VAC
Contact Resistance: 20MΩ max
Insulation Resistance:500V DC 1000MΩ Min
Dielectric Strength:1000V AC 1 Minute
Operating Temperature:-25ºC~+65ºC
Electrical Life :20,000 cycles



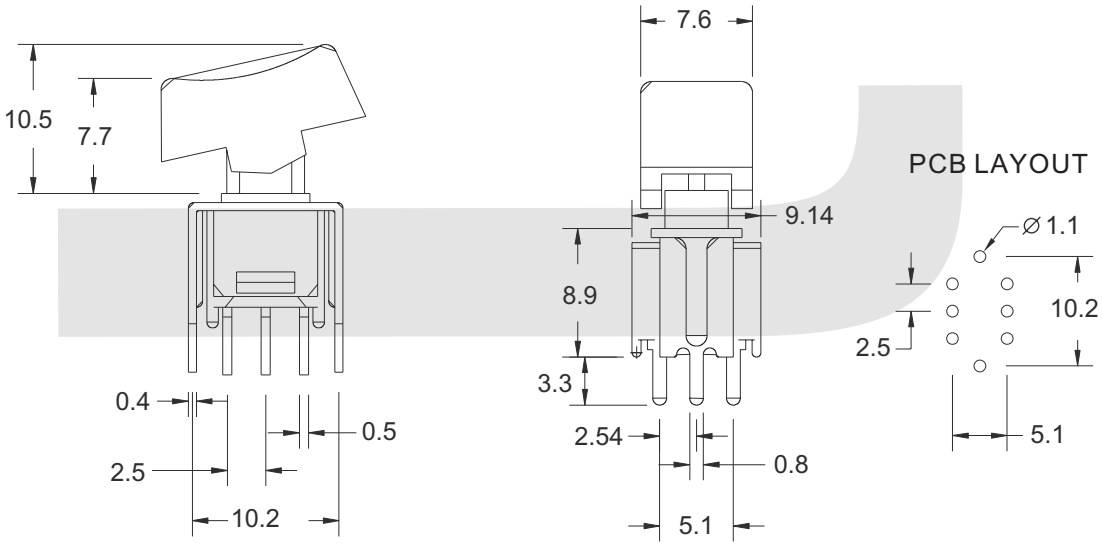

ORDER INFORMATION

KLS7-SRLS-2 02-A 2 X T

- Part Number
- SRLS:Sub-miniature Rocker Switch Series
- POLES: 1=Single Pole 2=Double Pole
- CIRCUIT: 01=ON-OFF 02=ON-ON 03=ON-OFF-ON
- Handle Type: A=Standard C=Short
- Terminal Type: 1=Solder terminal 2=Pc terminal 3=Pc-H terminal 4=Pc-V terminal
- Handle Cap Type: R=Red B=Black W=White Y=Yello G=Green BL=Blue
- BRACKET: T=With Bracket None=Without Bracket

DIP Switch Series

KLS7-SST-10 (Sealed Sub-miniature type)

SPECIFICATIONS

Rating:3A125V AC / 1.5A 250V AC
Electrical Life: 30000 Cycles
Insulation resistance: 1000MΩ min
Contact resistance: 20mΩ max
Dielectric Strength: 1500V RMS@ Sea Level
Operating Temperature: -30°C ~ +85°C
Degree of protection:IP67



SPDT



MODEL NO.	TYPE		
2AS1	ON		ON
2AS2	ON		(ON)
2AS3	ON	OFF	ON
2AS4	(ON)	OFF	(ON)
2AS5	ON	OFF	(ON)
Term. Comm.	2 - 3	OPEN	2 - 1

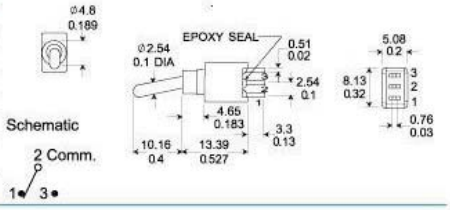

DPDT



MODEL NO.	TYPE		
2AD1	ON		ON
2AD2	ON		(ON)
2AD3	ON	OFF	ON
Term. Comm.	2 - 3 5 - 6	OPEN	2 - 1 5 - 4

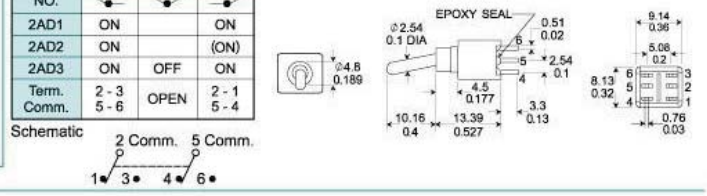

SPDT
M6N (kink pin)



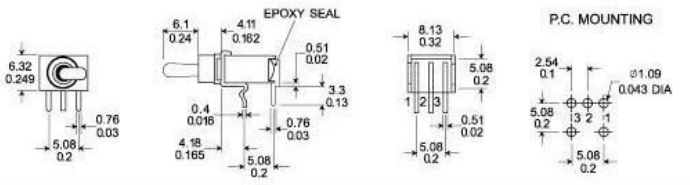

SPDT
M7



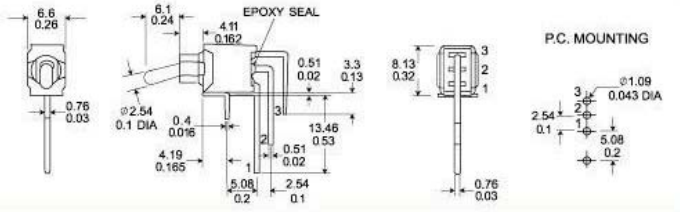

ORDER INFORMATION

DIP Switch Series

VII

KLS7-YTS (Medium type)

SPECIFICATIONS

Contact Rating:5A125V AC / 2A 250V AC
Electrical Life: 30000 Cycles
Contact resistance:10MΩ max.
Insulation resistance: 1000MΩ min
Dielectric Strength: 1500V RMS@ Sea Level
Operating Temperature: -45°C to +85°C
Standard: UL VDE CE CQC ROHS



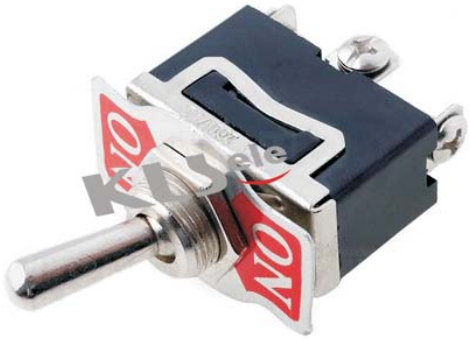

KLS7-YTS-1301 ON-OFF:
6A 250V AC 10A 125V AC

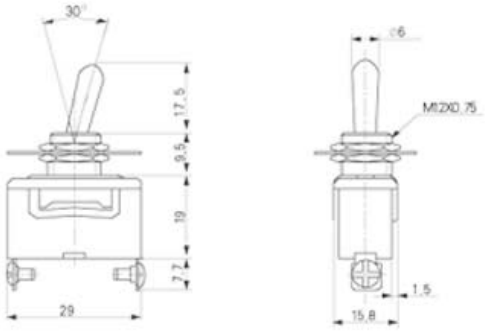

KLS7-YTS-1301A ON-OFF:
10A 250V AC 20A 125V AC



KLS7-YTS-1302 ON-ON:
6A 250V AC 10A 125V AC
KLS7-YTS-1303 ON-OFF-ON:
6A 250V AC 10A 125V AC

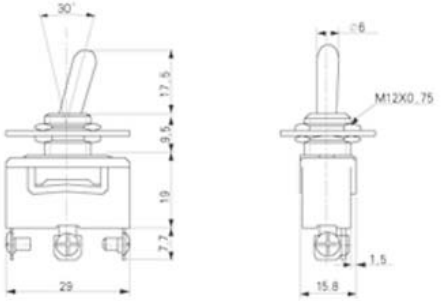

KLS7-YTS-1302A ON-ON:
10A 250V AC 20A 125V AC
KLS7-YTS-1303A ON-OFF-ON:
10A 250V AC 20A 125V AC

ORDER INFORMATION

Knobs


SC001


SC002


SC003


SC004


SC005


SC101


SC102


SC103


SC104


SC105


SC106


SC107


SC108


SC109


SC110


SC111


SC118


SC119


SC201


SC202


SC203


SC204


SC205


SC206


SC207

Knobs


SC208

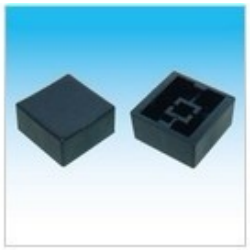
SC209


SC210


SC211


SC212


SC213

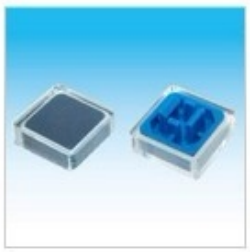
SC214


SC215


SC216


SC218


SC219


SC220


SC221


SC222


SC223


SC224


SC225


SC301


SC302


SC303


SC304


SC305


SC306


SC307


SC308

Knobs


SC309


SC310


SC311


SC312


SC313


SC314


SC401


SC402


SC403


SC404


SC405


SC406


SC407


SC408


SC409


SC410


SC411


SC412


SC413


SC414


SC415


SC416


SC417


SC418


SC419

Knobs


SC420


SC421

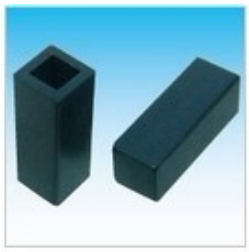
SC422


SC423


SC424


SC425


SC426


SC501


SC502


SC503


SC601


SC602


SC603


SC604


SC701


SC702


SC703


SC704


SC705


SC708

Switchable circuit breaker 3 PINS

The products is chiefly used for the occasion which dynamelectric appliance , mini type electromotor , plug electric outlet , charger , moving electric outlet , bodybuilding-appliance and electrical appliance etc . . . . . .



SPECIFICATION:

Rating: 3 ~ 20A
Input Power: 125/250 V AC
Dielectric Strength: 1,250V AC at 60Hz for 60 seconds
Insuiation Resistance: 100 megohms at 500V DC
Ambient Operation: Operates normally in
Temperatures Between -40 to85
Endurance: 10,000 Operations at a rate of 6 Operations per Minute
Approvals : RoHS,UL

DRAWING:

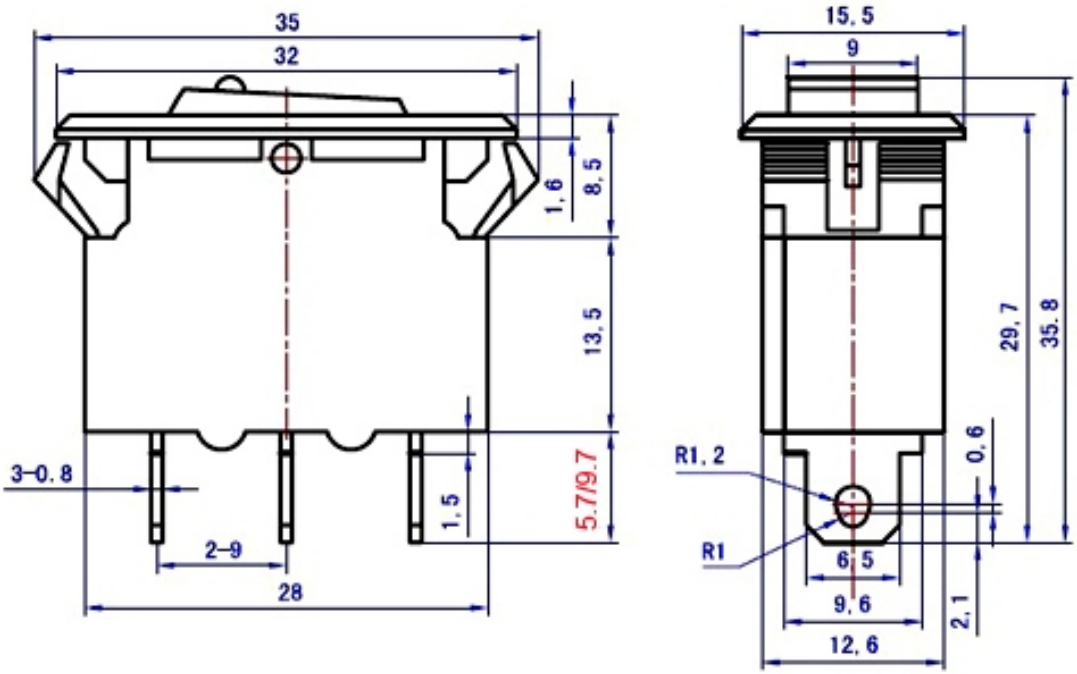

ORDERING INFORMATION:

KLS ITEM CODE	Rated current	Rated voltage	Terminal length / mm
KLS7-ST-001-S-05	5A	250V	5.7
KLS7-ST-001-S-10	10A	250V	5.7
KLS7-ST-001-S-15	15A	250V	5.7
KLS7-ST-001-L-05	5A	250V	9.7
KLS7-ST-001-L-10	10A	250V	9.7
KLS7-ST-001-L-15	15A	250V	9.7

V

Switchable circuit breaker 2 PINS 5.00mm



DRAWING:

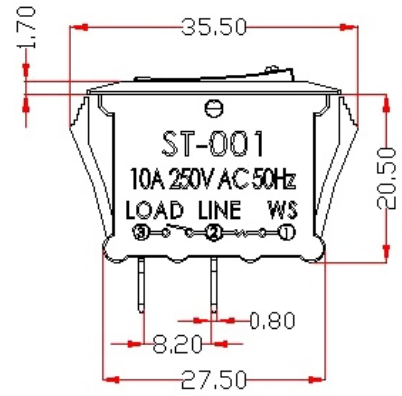

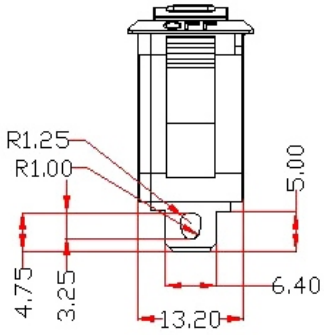

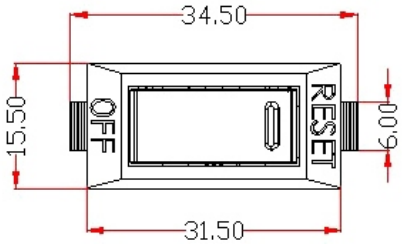

ORDERING INFORMATION:

KLS ITEM CODE	Rated current	Rated voltage	Terminal length / mm
KLS7-ST-001A-S-05	5A	250V	5.0mm
KLS7-ST-001A-S-06	6A	250V	5.0mm
KLS7-ST-001A-S-07	7A	250V	5.0mm
KLS7-ST-001A-S-08	8A	250V	5.0mm
KLS7-ST-001A-S-10	10A	250V	5.0mm
KLS7-ST-001A-S-15	15A	250V	5.0mm
KLS7-ST-001A-S-16	16A	250V	5.0mm

Switchable circuit breaker 2 PINS 9.00mm



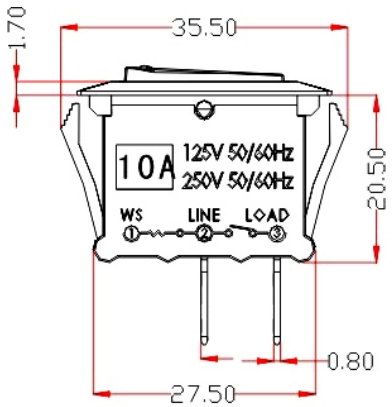

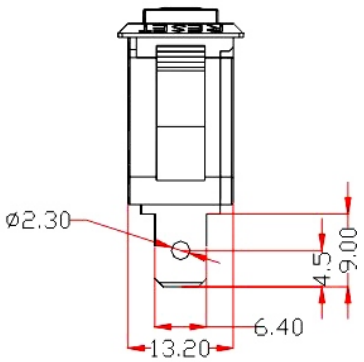

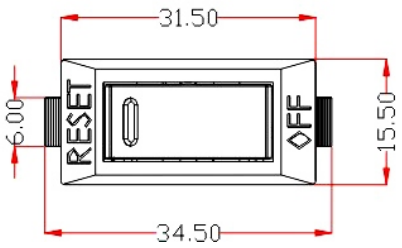

ORDERING INFORMATION:

KLS ITEM CODE	Rated current	Rated voltage	Terminal length / mm
KLS7-ST-001A-L-05	5A	250V	9.0mm
KLS7-ST-001A-L-06	6A	250V	9.0mm
KLS7-ST-001A-L-07	7A	250V	9.0mm
KLS7-ST-001A-L-08	8A	250V	9.0mm
KLS7-ST-001A-L-10	10A	250V	9.0mm
KLS7-ST-001A-L-15	15A	250V	9.0mm
KLS7-ST-001A-L-16	16A	250V	9.0mm

V

Push-to-Reset Circuit Breakers



SPECIFICATION:

Rating: 3 ~ 25 A 125/250 V AC
Input Power: 125/250 Vac 50V dc 50-60Hz
Interrupting Capacity : 1,000Amp x 125 V ac 200Amp x 250V ac
Voltage Drop : Less than 0.25V
Dielectric strength: AC 1500 V 1 minute
Insulation resistance: >500 Megaohms
Reset Time: Within 60 seconds
Temperature Rise at Terminal Block: Less than 65oC at 100% of rated current applied continuously at 25oC
Contact Endurance: 125Vac X 150% of rated current >500 Cycles

Calibration (at 25oC)

100% of rated current: Hold, No-Trip
135% of rated current: Trip in 1 Hour
200% of rated current: 5-25 seconds Trip
300% of rated current: 1.6-4.8 seconds Trip

DRAWING:

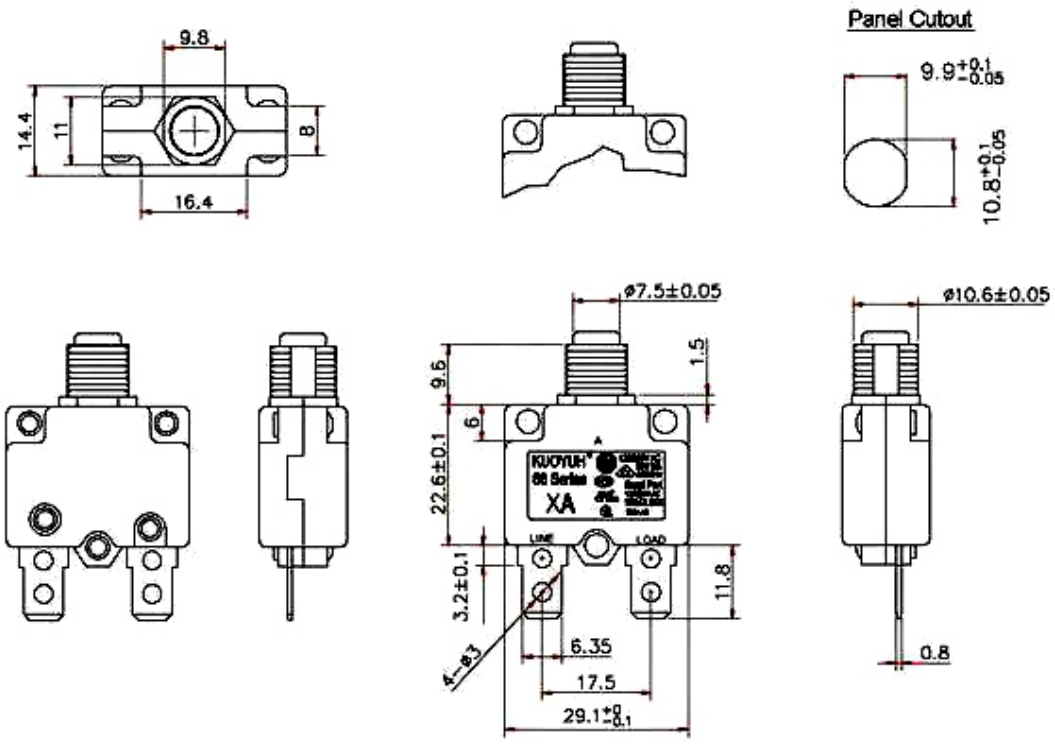

ORDERING INFORMATION:

Part No. KLS7-ST002-□□

05-5A
06-6A
07-7A
08-8A
10-10A
05-5A
12-12A
15-1A

Micro fuse Series

KLS5-101 (Fast Blow) Micro fuse Series

Material

Base / Cap: PA66 UL94V-0
Round Pins: Copper, Sn plated
Operating Temperature: -40 º C to +85 º C



Features

Ø 8.35 * 7.7 mm Micro fuse
Small volume,
Rating Current: 315mA ~ 6.3A
Rating Voltage: 250Vac
Excellent inrush current withstanding capability
Excellent withstand capacity for thermal and mechanic shock
High reliability and stable solderability.

Dimension (Unit: mm)

Short Lead (Bulk)

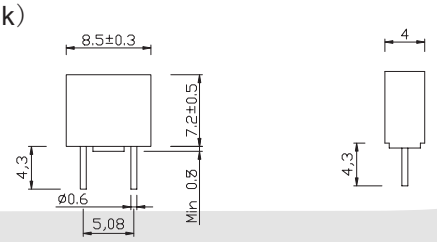

Taping

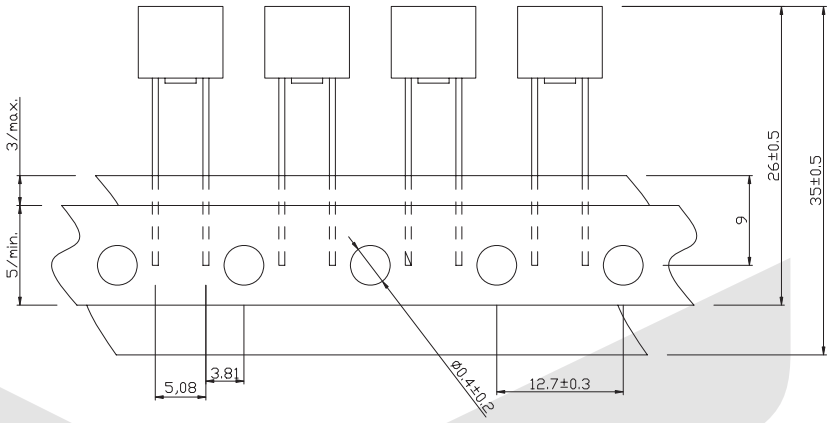

ORDER INFORMATION

Product NO.: KLS5-101-5 E F-0315 H -T

- Part Number
- Micro fuse Series
- R=Round Type
- E= square Type
- F = Fast Blow Type
- T = Slow Blow Type
- Rated current
- 250V
- With Out T=Bulk
- With T= taping

Micro fuse Series

KLS5-101 (Fast Blow) Micro fuse Series

Item.	Rated current	Max. voltage drop(mv)	Safety Approvals							Reference (A2. Sec.)
			CCC	CQC	SEMKO	VDE	UR(CUR)	BSI	PSE	
5EF-0315H	315mA	400	0		0	0	0	0		0. 024
5EF-0400H	400mA	370	0		0	0	0	0		0. 044
5EF-0500H	500mA	350	0		0	0	0	0		0. 074
5EF-0630H	630mA	320	0		0	0	0	0		0. 128
5EF-0800H	800mA	300	0		0	0	0	0		0. 235
5EF-010H	1A	280	0		0	0	0	0	●	0. 328
5EF-013H	1. 25A	280	0		0	0	0	0	●	0. 563
5EF-016H	1. 6A	250	0		0	0	0	0	●	1. 11
5EF-020H	2A	240	0		0	0	0	0	●	1. 71
5EF-025H	2. 5A	200	0		0	0	0	0	●	2. 96
5EF-032H	3. 15A	180	0		0	0	0	0	●	2. 8
5EF-040H	4A	160	0		0	0	0	0	●	4. 61
5EF-050H	5A	150		0	0	0	0	0	●	7. 56
5EF-063H	6. 3A	150		0	0	0	0	0	●	13. 4

● Denotes for Approved
o Denotes for Pending

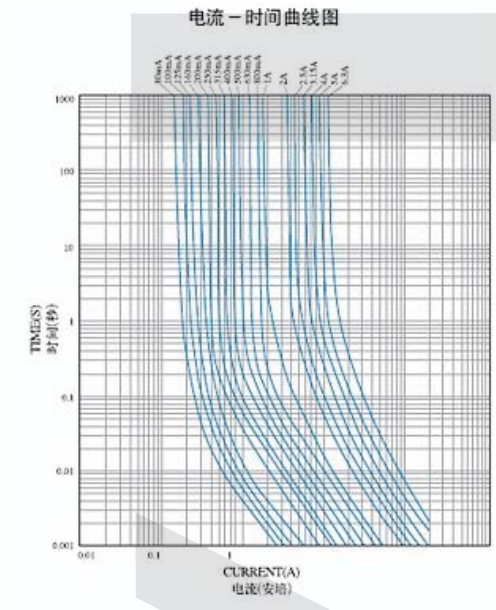

Interrupting Rating:
CCC/SEMKO/VDE/UR/BSI: 35A or 10In Whichever is Greater
PSE: 100A 250VAC

Electrical Characteristics

Rating Amp. (In)		Blowing Time
2.1In	Max.	30 minutes
2.5In	Min.	10 ms
	Max.	3 Seconds
4In	Min.	3 minutes
	Max.	300 ms
10In	Max.	20 ms

ORDER INFORMATION

Product NO.: KLS5-101-5 E F-0315 H -T

- Part Number / Micro fuse Series
- R=Round Type
- E= square Type
- F = Fast Blow Type
- T = Slow Blow Type
- Rated current
- 250V
- With Out T=Bulk
- With T= taping

Micro fuse Series

KLS5-101 (Fast Blow) Micro fuse Series



Material

Base / Cap: PA66 UL94V-0
Round Pins: Copper, Sn plated
Operating Temperature: -40 ° C to +85 ° C

Features

Ø 8.35 * 7.7 mm Micro fuse
Small volume,
Rating Current: 315mA ~ 6.3A
Rating Voltage: 250Vac
Excellent inrush current withstanding capability
Excellent withstand capacity for thermal and mechanic shock
High reliability and stable solderability.

Dimension (Unit: mm)

Short Lead (Bulk)

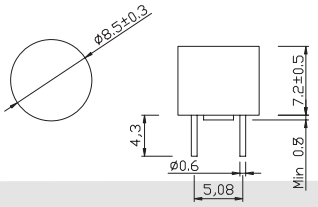

Taping

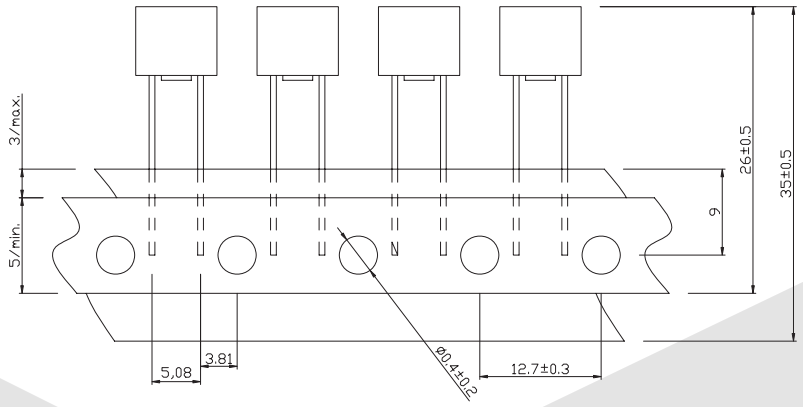

ORDER INFORMATION

Product NO.: KLS5-101-5 R F-0315 H -T

- Part Number
- Micro fuse Series
- R=Round Type
- E= square Type
- Rated current
- F = Fast Blow Type
- 250V
- With Out T=Bulk
- With T= taping
- T = Slow Blow Type

Micro fuse Series

KLS5-101 (Fast Blow) Micro fuse Series

Item.	Rated current	Max. voltage drop(mv)	Safety Approvals							Reference (A2. Sec.)
			CCC	CQC	SEMKO	VDE	UR(CUR)	BSI	PSE	
5RF-0315H	315mA	400	0		0	0	0	0		0. 024
5RF-0400H	400mA	370	0		0	0	0	0		0. 044
5RF-0500H	500mA	350	0		0	0	0	0		0. 074
5RF-0630H	630mA	320	0		0	0	0	0		0. 128
5RF-0800H	800mA	300	0		0	0	0	0		0. 235
5RF-010H	1A	280	0		0	0	0	0	●	0. 328
5RF-013H	1. 25A	280	0		0	0	0	0	●	0. 563
5RF-016H	1. 6A	250	0		0	0	0	0	●	1. 11
5RF-020H	2A	240	0		0	0	0	0	●	1. 71
5RF-025H	2. 5A	200	0		0	0	0	0	●	2. 96
5RF-032H	3. 15A	180	0		0	0	0	0	●	2. 8
5RF-040H	4A	160	0		0	0	0	0	●	4. 61
5RF-050H	5A	150		0	0	0	0	0	●	7. 56
5RF-063H	6. 3A	150		0	0	0	0	0	●	13. 4

● Denotes for Approved
o Denotes for Pending

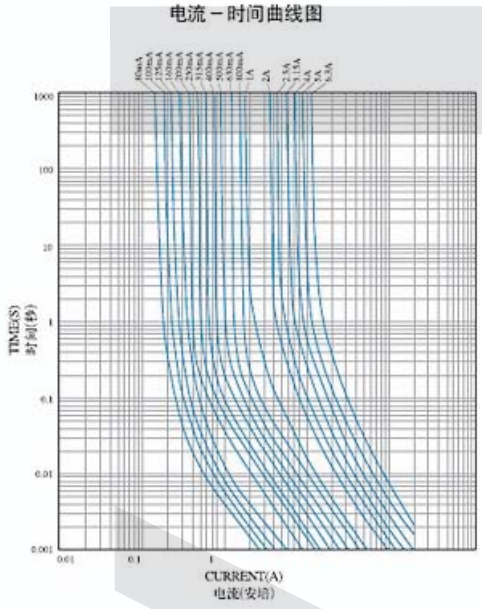

Interrupting Rating:
CCC/SEMKO/VDE/UR/BSI: 35A or 10In Whichever is Greater
PSE: 100A 250VAC

Electrical Characteristics

Rating Amp. (In)		Blowing Time
2.1In	Max.	30 minutes
2.5In	Min.	10 ms
	Max.	3 Seconds
4In	Min.	3 minutes
	Max.	300 ms
10In	Max.	20 ms

ORDER INFORMATION

Product NO.: KLS5-101-5 R F-0315 H -T

- Part Number
- Micro fuse Series
- R=Round Type
- E= square Type
- F = Fast Blow Type
- T = Slow Blow Type
- Rated current
- 250V
- With Out T=Bulk
- With T= taping

Micro fuse Series

KLS5-102 (Slow Blow) Micro fuse Series

Material

Base / Cap: PA66 UL94V-0
Round Pins: Copper, Sn plated
Operating Temperature: -40 ° C to +85 ° C

Features

Ø 8.35 * 7.7 mm Micro fuse
Small volume,
Rating Current: 315mA ~ 6.3A
Rating Voltage: 250Vac
Excellent inrush current withstanding capability
Excellent withstand capacity for thermal and mechanic shock
High reliability and stable solderability.



Dimension (Unit: mm)

Short Lead (Bulk)

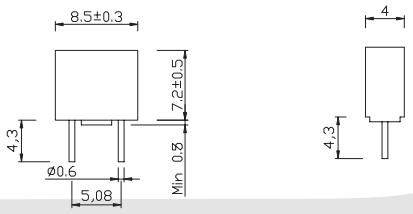

Taping

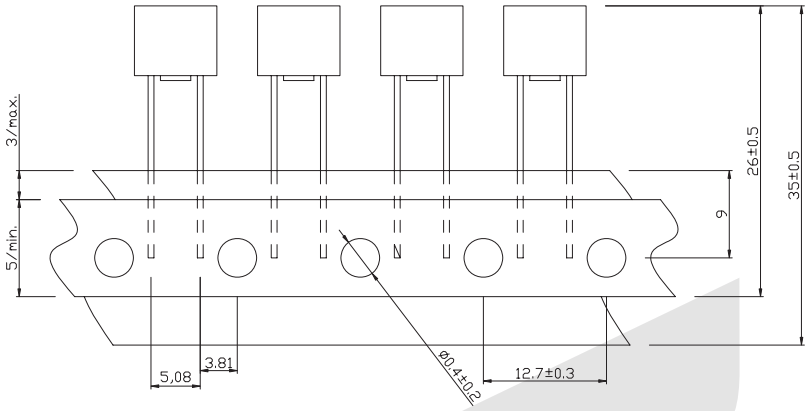

ORDER INFORMATION

Product NO.: KLS5-102-5 E T-0315 H -T

- Part Number
- Micro fuse Series
- R=Round Type
- E= square Type
- Rated current
- 250V
- With Out T=Bulk
- With T= taping
- F = Fast Blow Type
- T = Slow Blow Type

Micro fuse Series

KLS5-102 (Slow Blow) Micro fuse Series

Item.	Rated current	Max. voltage drop (mv)	Safety Approvals						Reference (A2. Sec.)
			CQC	SEMKO	VDE	UR (CUR)	BSI	PSE	
5ET-0100H	100mA	350	●	●	●	●	●		0. 05
5ET-0125H	125mA	300	●	●	●	●	●		0. 08
5ET-0160H	160mA	280	●	●	●	●	●		0. 15
5ET-0200H	200mA	260	●	●	●	●	●		0. 22
5ET-0250H	250mA	240	●	●	●	●	●		0. 33
5ET-0315H	315mA	220	●	●	●	●	●		0. 57
5ET-0400H	400mA	200	●	●	●	●	●		1. 05
5ET-0500H	500mA	190	●	●	●	●	●		1. 65
5ET-0630H	630mA	180	●	●	●	●	●		2. 53
5ET-0800H	800mA	160	●	●	●	●	●		4. 39
5ET-010H	1A	140	●	●	●	●	●	●	7. 02
5ET-013H	1. 25A	130	●	●	●	●	●	●	11. 7
5ET-016H	1. 6A	120	●	●	●	●	●	●	16. 1
5ET-020H	2A	100	●	●	●	●	●	●	29
5ET-025H	2. 5A	100	●	●	●	●	●	●	43. 4
5ET-032H	3. 15A	100	●	●	●	●	●	●	63. 6
5ET-040H	4A	100	●	●	●	●	●	●	100
5ET-050H	5A	100	●	●	●	●	●	●	150
5ET-063H	6. 3A	100	●	●	●	●	●	●	252

● Denotes for Approved

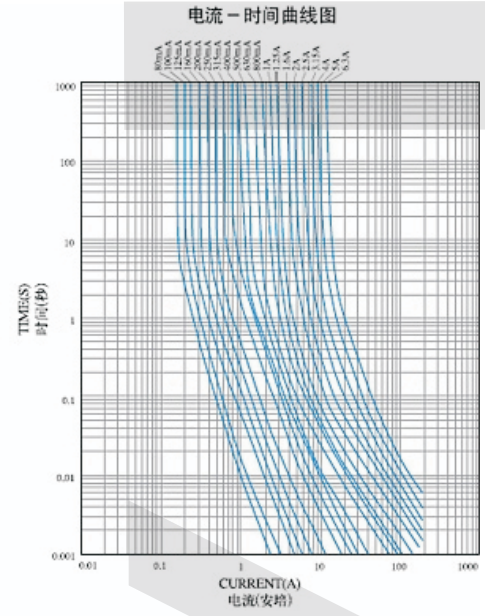

Interrupting Rating:
CCC/SEMKO/VDE/UR/BSI: 35A or 10In Whichever is Greater
PSE: 100A 250VAC

Electrical Characteristics

Rating Amp. (In)		Blowing Time
2.1In	Max.	2 minutes
2.5In	Min.	400 ms
	Max.	10 Seconds
4In	Min.	150 ms
	Max.	3 Seconds
10In	Min.	20 ms
	Max.	150 ms

ORDER INFORMATION

Product NO.: KLS5-102-5 E T-0315 H -T

- Part Number
- Micro fuse Series
- R=Round Type
- E= square Type
- F = Fast Blow Type
- T = Slow Blow Type
- Rated current
- 250V
- With Out T=Bulk
- With T= taping

Micro fuse Series

KLS5-102 (Slow Blow) Micro fuse Series



Material

Base / Cap: PA66 UL94V-0
Round Pins: Copper, Sn plated
Operating Temperature: -40 ° C to +85 ° C

Features

Ø 8.35 * 7.7 mm Micro fuse
Small volume,
Rating Current: 315mA ~ 6.3A
Rating Voltage: 250Vac
Excellent inrush current withstanding capability
Excellent withstand capacity for thermal and mechanic shock
High reliability and stable solderability.

Dimension (Unit: mm)

Short Lead (Bulk)

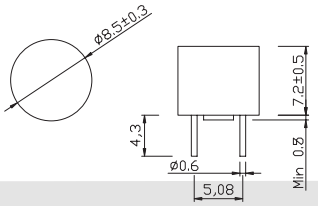

Taping

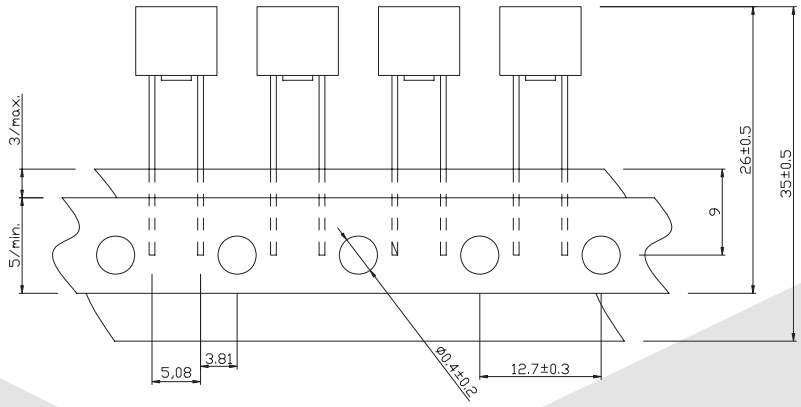

ORDER INFORMATION

Product NO.: KLS5-102-5 R T-0315 H -T

- Part Number
- Micro fuse Series
- R=Round Type
- E= square Type
- Rated current
- 250V
- With Out T=Bulk
- With T= taping
- F = Fast Blow Type
- T = Slow Blow Type

Micro fuse Series

KLS5-102 (Slow Blow) Micro fuse Series

Item.	Rated current	Max. voltage drop (mv)	Safety Approvals						Reference (A2. Sec.)
			CQC	SEMKO	VDE	UR (CUR)	BSI	PSE	
5RT-0100H	100mA	350	●	●	●	●	●		0. 05
5RT-0125H	125mA	300	●	●	●	●	●		0. 08
5RT-0160H	160mA	280	●	●	●	●	●		0. 15
5RT-0200H	200mA	260	●	●	●	●	●		0. 22
5RT-0250H	250mA	240	●	●	●	●	●		0. 33
5RT-0315H	315mA	220	●	●	●	●	●		0. 57
5RT-0400H	400mA	200	●	●	●	●	●		1. 05
5RT-0500H	500mA	190	●	●	●	●	●		1. 65
5RT-0630H	630mA	180	●	●	●	●	●		2. 53
5RT-0800H	800mA	160	●	●	●	●	●		4. 39
5RT-010H	1A	140	●	●	●	●	●	●	7. 02
5RT-013H	1. 25A	130	●	●	●	●	●	●	11. 7
5RT-016H	1. 6A	120	●	●	●	●	●	●	16. 1
5RT-020H	2A	100	●	●	●	●	●	●	29
5RT-025H	2. 5A	100	●	●	●	●	●	●	43. 4
5RT-032H	3. 15A	100	●	●	●	●	●	●	63. 6
5RT-040H	4A	100	●	●	●	●	●	●	100
5RT-050H	5A	100	●	●	●	●	●	●	150
5RT-063H	6. 3A	100	●	●	●	●	●	●	252

● Denotes for Approved

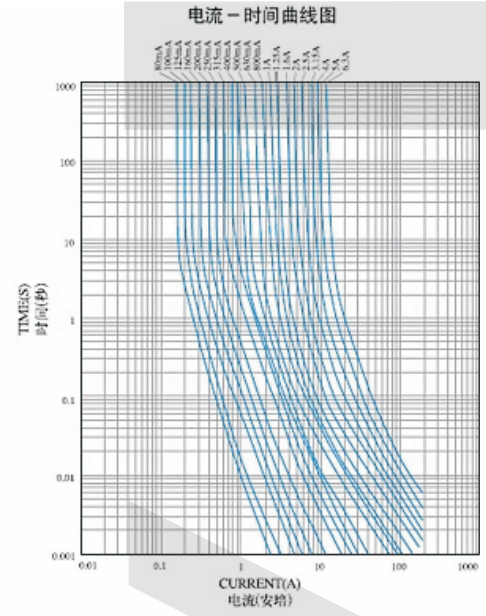

Interrupting Rating:
CCC/SEMKO/VDE/UR/BSI: 35A or 10In Whichever is Greater
PSE: 100A 250VAC

Electrical Characteristics

Rating Amp. (In)		Blowing Time
2.1In	Max.	2 minutes
2.5In	Min.	400 ms
	Max.	10 Seconds
4In	Min.	150 ms
	Max.	3 Seconds
10In	Min.	20 ms
	Max.	150 ms

ORDER INFORMATION

Product NO.: KLS5-102-5 R T-0315 H -T

- Part Number
- Micro fuse Series
- R=Round Type
- E= square Type
- F = Fast Blow Type
- T = Slow Blow Type
- Rated current
- 250V
- With Out T=Bulk
- With T= taping

Φ3.6x10 Glass Tube Fuse Series

KLS5-1003/1004 Outer weld Φ3.6x10 Glass Tube Fuse (Fast Blow) Series

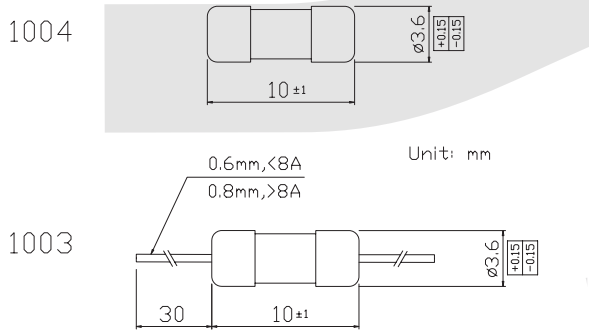

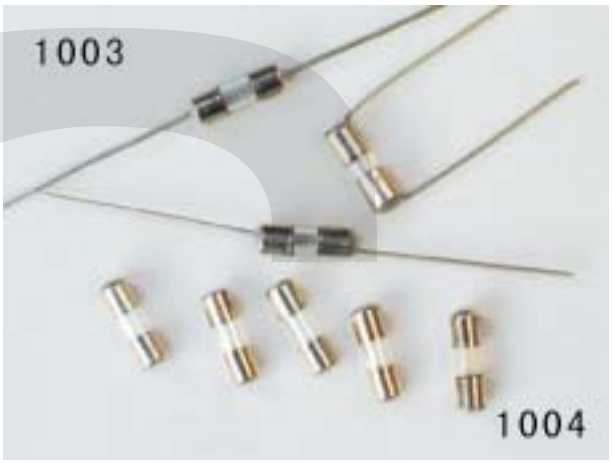

ELECTRICAL CHARACTERISTICS

RATING	1In	2In	2.75In	4In	10In
BLOWING TIME	Min 4h	Max 5s	Max 300ms	Max 30ms	Max 4ms

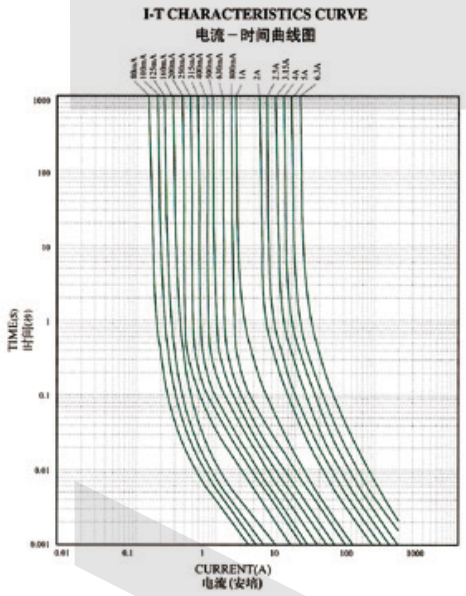

Part No.	Rated Current	Mv Voltage Drop	Voltage Rated
1004-0100	100mA	1750	125V/250V
1004-0125	125mA	1500	125V/250V
1004-0150	150mA	1500	125V/250V
1004-0160	160mA	1500	125V/250V
1004-0200	200mA	1500	125V/250V
1004-0250	250mA	1000	125V/250V
1004-0300	300mA	1000	125V/250V
1004-0315	315mA	1000	125V/250V
1004-0350	350mA	1000	125V/250V
1004-0400	400mA	1000	125V/250V
1004-0500	500mA	1000	125V/250V
1004-0600	600mA	900	125V/250V
1004-0700	700mA	500	125V/250V
1004-0750	750mA	500	125V/250V
1004-0800	800mA	275	125V/250V
1004-1000	1A	275	125V/250V
1004-1200	1.2A	275	125V/250V
1004-1250	1.25A	275	125V/250V
1004-1500	1.5A	275	125V/250V
1004-1600	1.6A	275	125V/250V
1004-1800	1.8A	275	125V/250V
1004-2000	2A	250	125V/250V
1004-2500	2.5A	250	125V/250V
1004-3000	3A	250	125V/250V
1004-3150	3.15A	250	125V/250V
1004-3500	3.5A	250	125V/250V
1004-4000	4A	225	125V/250V
1004-5000	5A	225	125V/250V
1004-6000	6A	225	125V/250V
1004-6300	6.3A	200	125V/250V
1004-7000	7A	200	125V/250V
1004-8000	8A	200	125V/250V
1004-10000	10A	200	125V/250V
1004-12000	12A	180	125V/250V
1004-15000	15A	180	125V/250V

Part No.	Rated Current	Mv Voltage Drop	Voltage Rated
1003-0100	100mA	1750	125V/250V
1003-0125	125mA	1500	125V/250V
1003-0150	150mA	1500	125V/250V
1003-0160	160mA	1500	125V/250V
1003-0200	200mA	1500	125V/250V
1003-0250	250mA	1000	125V/250V
1003-0300	300mA	1000	125V/250V
1003-0315	315mA	1000	125V/250V
1003-0350	350mA	1000	125V/250V
1003-0400	400mA	1000	125V/250V
1003-0500	500mA	1000	125V/250V
1003-0600	600mA	900	125V/250V
1003-0700	700mA	500	125V/250V
1003-0750	750mA	500	125V/250V
1003-0800	800mA	275	125V/250V
1003-1000	1A	275	125V/250V
1003-1200	1.2A	275	125V/250V
1003-1250	1.25A	275	125V/250V
1003-1500	1.5A	275	125V/250V
1003-1600	1.6A	275	125V/250V
1003-1800	1.8A	275	125V/250V
1003-2000	2A	250	125V/250V
1003-2500	2.5A	250	125V/250V
1003-3000	3A	250	125V/250V
1003-3150	3.15A	250	125V/250V
1003-3500	3.5A	250	125V/250V
1003-4000	4A	225	125V/250V
1003-5000	5A	225	125V/250V
1003-6000	6A	225	125V/250V
1003-6300	6.3A	200	125V/250V
1003-7000	7A	200	125V/250V
1003-8000	8A	200	125V/250V
1003-10000	10A	200	125V/250V
1003-12000	12A	180	125V/250V
1003-15000	15A	180	125V/250V

ORDER INFORMATION

Product NO.: KLS5-1003-XXXX

- XXXX — Rated Carrent
- 1003 — Lead Type:1003=With Lead 1004=No Lead
- KLS5 — Part Number

V

Φ3.6x10 Glass Tube Fuse Series

KLS5-1005/1006 Inner weld Φ3.6x10 Glass Tube Fuse (Fast Blow) Series

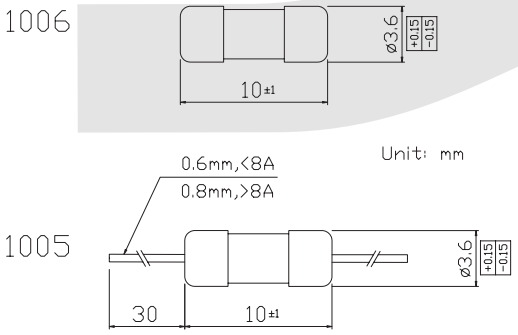

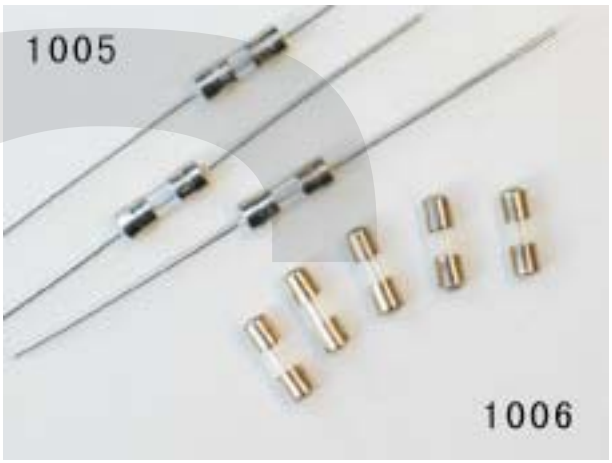

ELECTRICAL CHARACTERISTICS

RATING	1In	2In	2.75In	4In	10In
BLOWING TIME	Min 4h	Max 5s	Max 300ms	Max 30ms	Max 4ms

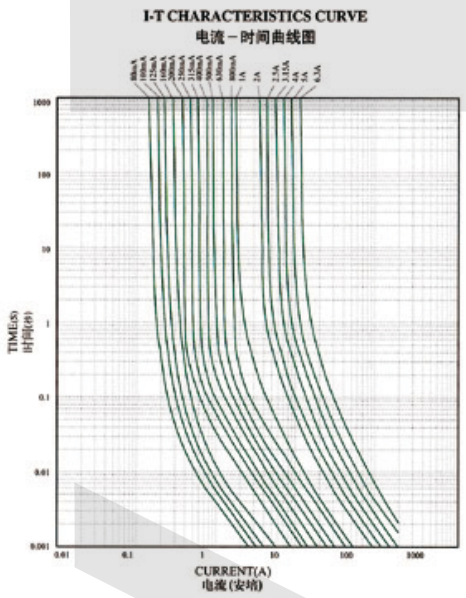

Part No.	Rated Current	Mv Voltage Drop	Voltage Rated
1006-0100	100mA	1750	125V/250V
1006-0125	125mA	1500	125V/250V
1006-0150	150mA	1500	125V/250V
1006-0160	160mA	1500	125V/250V
1006-0200	200mA	1500	125V/250V
1006-0250	250mA	1000	125V/250V
1006-0300	300mA	1000	125V/250V
1006-0315	315mA	1000	125V/250V
1006-0350	350mA	1000	125V/250V
1006-0400	400mA	1000	125V/250V
1006-0500	500mA	1000	125V/250V
1006-0600	600mA	900	125V/250V
1006-0700	700mA	500	125V/250V
1006-0750	750mA	500	125V/250V
1006-0800	800mA	275	125V/250V
1006-1000	1A	275	125V/250V
1006-1200	1.2A	275	125V/250V
1006-1250	1.25A	275	125V/250V
1006-1500	1.5A	275	125V/250V
1006-1600	1.6A	275	125V/250V
1006-1800	1.8A	275	125V/250V
1006-2000	2A	250	125V/250V
1006-2500	2.5A	250	125V/250V
1006-3000	3A	250	125V/250V
1006-3150	3.15A	250	125V/250V
1006-3500	3.5A	250	125V/250V
1006-4000	4A	225	125V/250V
1006-5000	5A	225	125V/250V
1006-6000	6A	225	125V/250V
1006-6300	6.3A	200	125V/250V
1006-7000	7A	200	125V/250V
1006-8000	8A	200	125V/250V
1006-10000	10A	200	125V/250V
1006-12000	12A	180	125V/250V
1006-15000	15A	180	125V/250V

Part No.	Rated Current	Mv Voltage Drop	Voltage Rated
1005-0100	100mA	1750	125V/250V
1005-0125	125mA	1500	125V/250V
1005-0150	150mA	1500	125V/250V
1005-0160	160mA	1500	125V/250V
1005-0200	200mA	1500	125V/250V
1005-0250	250mA	1000	125V/250V
1005-0300	300mA	1000	125V/250V
1005-0315	315mA	1000	125V/250V
1005-0350	350mA	1000	125V/250V
1005-0400	400mA	1000	125V/250V
1005-0500	500mA	1000	125V/250V
1005-0600	600mA	900	125V/250V
1005-0700	700mA	500	125V/250V
1005-0750	750mA	500	125V/250V
1005-0800	800mA	275	125V/250V
1005-1000	1A	275	125V/250V
1005-1200	1.2A	275	125V/250V
1005-1250	1.25A	275	125V/250V
1005-1500	1.5A	275	125V/250V
1005-1600	1.6A	275	125V/250V
1005-1800	1.8A	275	125V/250V
1005-2000	2A	250	125V/250V
1005-2500	2.5A	250	125V/250V
1005-3000	3A	250	125V/250V
1005-3150	3.15A	250	125V/250V
1005-3500	3.5A	250	125V/250V
1005-4000	4A	225	125V/250V
1005-5000	5A	225	125V/250V
1005-6000	6A	225	125V/250V
1005-6300	6.3A	200	125V/250V
1005-7000	7A	200	125V/250V
1005-8000	8A	200	125V/250V
1005-10000	10A	200	125V/250V
1005-12000	12A	180	125V/250V
1005-15000	15A	180	125V/250V

ORDER INFORMATION

Product NO.: KLS5-1005-XXXX

- XXXX — Rated Carrent
- 1005 — Lead Type:1005=With Lead 1006=No Lead
- KLS5 — Part Number

Φ3.6x10 Glass Tube Fuse Series

KLS5-1009/1010 Φ3.6x10 Glass Tube Fuse (Slow Blow) Series

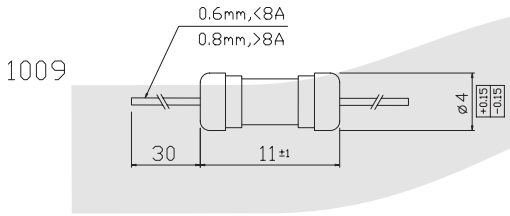

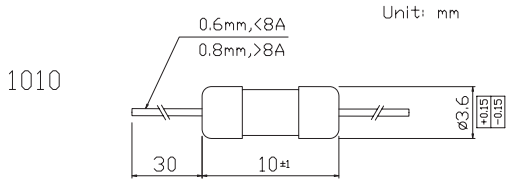

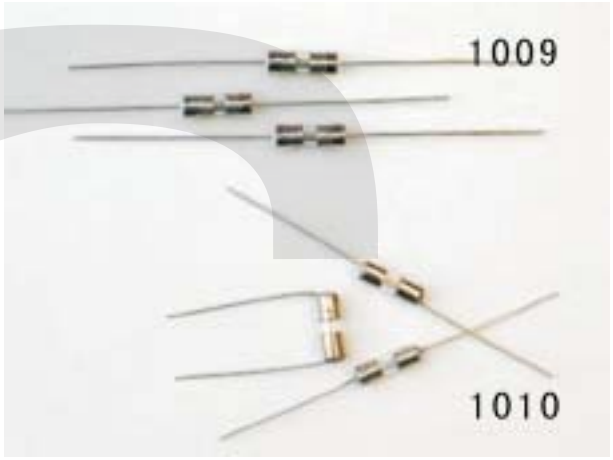

ELECTRICAL CHARACTERISTICS

RATING		BLOWING TIME
2.1In	Max	2min
2.75In	Min	400ms
	Max	10sec
4In	Min	150ms
	Max	3sec
10In	Min	20ms
	Max	150ms

I-T CHARACTERISTICS CURVE
电流－时间曲线图

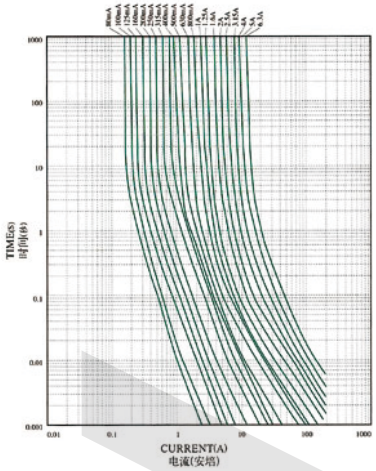

Part No.	Rated Carrent	Mv Voltage Drop	Voltage Rated
1010-0100	100mA	1750	125V/250V
1010-0125	125mA	1500	125V/250V
1010-0150	150mA	1500	125V/250V
1010-0160	160mA	1500	125V/250V
1010-0200	200mA	1500	125V/250V
1010-0250	250mA	1000	125V/250V
1010-0300	300mA	1000	125V/250V
1010-0400	400mA	1000	125V/250V
1010-0500	500mA	1000	125V/250V
1010-0600	600mA	900	125V/250V
1010-0700	700mA	500	125V/250V
1010-0750	750mA	500	125V/250V
1010-0800	800mA	275	125V/250V
1010-1000	1A	275	125V/250V
1010-1200	1.2A	275	125V/250V
1010-1250	1.25A	275	125V/250V
1010-1500	1.5A	275	125V/250V
1010-1600	1.6A	275	125V/250V
1010-1800	1.8A	275	125V/250V
1010-2000	2A	250	125V/250V
1010-2500	2.5A	250	125V/250V
1010-3000	3A	250	125V/250V
1010-3150	3.15A	250	125V/250V
1010-3500	3.5A	250	125V/250V
1010-4000	4A	225	125V/250V
1010-5000	5A	225	125V/250V
1010-6000	6A	225	125V/250V
1010-6300	6.3A	200	125V/250V
1010-7000	7A	200	125V/250V
1010-8000	8A	200	125V/250V
1010-10000	10A	200	125V/250V
1010-12000	12A	180	125V/250V
1010-15000	15A	180	125V/250V

Part No.	Rated Carrent	Mv Voltage Drop	Voltage Rated
1009-0100	100mA	1750	125V/250V
1009-0125	125mA	1500	125V/250V
1009-0150	150mA	1500	125V/250V
1009-0160	160mA	1500	125V/250V
1009-0200	200mA	1500	125V/250V
1009-0250	250mA	1000	125V/250V
1009-0300	300mA	1000	125V/250V
1009-0400	400mA	1000	125V/250V
1009-0500	500mA	1000	125V/250V
1009-0600	600mA	900	125V/250V
1009-0700	700mA	500	125V/250V
1009-0750	750mA	500	125V/250V
1009-0800	800mA	275	125V/250V
1009-1000	1A	275	125V/250V
1009-1200	1.2A	275	125V/250V
1009-1250	1.25A	275	125V/250V
1009-1500	1.5A	275	125V/250V
1009-1600	1.6A	275	125V/250V
1009-1800	1.8A	275	125V/250V
1009-2000	2A	250	125V/250V
1009-2500	2.5A	250	125V/250V
1009-3000	3A	250	125V/250V
1009-3150	3.15A	250	125V/250V
1009-3500	3.5A	250	125V/250V
1009-4000	4A	225	125V/250V
1009-5000	5A	225	125V/250V
1009-6000	6A	225	125V/250V
1009-6300	6.3A	200	125V/250V
1009-7000	7A	200	125V/250V
1009-8000	8A	200	125V/250V
1009-10000	10A	200	125V/250V
1009-12000	12A	180	125V/250V
1009-15000	15A	180	125V/250V

ORDER INFORMATION

Product NO.: KLS5-1009-XXXX

- Rated Carrent
- Lead Type:1009=Φ3.6x10 1010=Φ4x11
- Part Number

Φ3.6x10 Ceramic Tube Fuse Series

KLS5-1011/1012 Φ3.6x10 Ceramic Tube Fuse (Fast Blow) Series

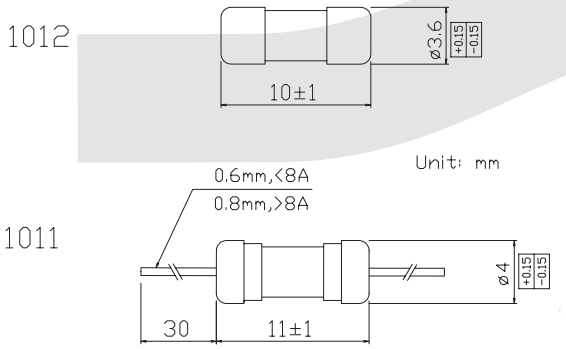

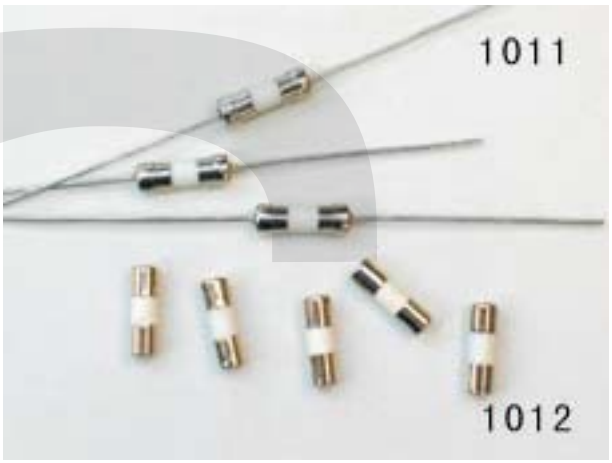

ELECTRICAL CHARACTERISTICS

RATING	BLOWING TIME
100%	4 hours Min
200%	60 Sec Max

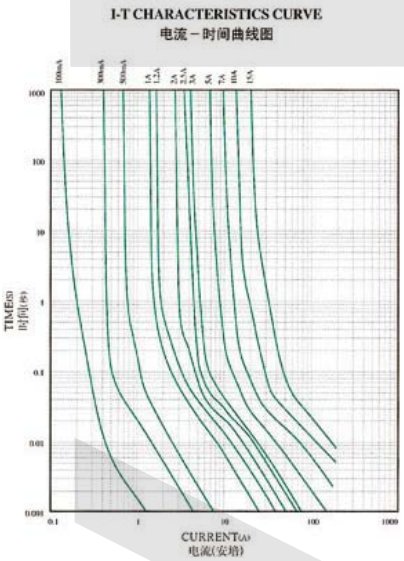

Part No.	Rated Carrent	Voltage Rated
1012-0100	100mA	125V/250V
1012-0125	125mA	125V/250V
1012-0150	150mA	125V/250V
1012-0160	160mA	125V/250V
1012-0200	200mA	125V/250V
1012-0250	250mA	125V/250V
1012-0300	300mA	125V/250V
1012-0315	315mA	125V/250V
1012-0350	350mA	125V/250V
1012-0400	400mA	125V/250V
1012-0500	500mA	125V/250V
1012-0600	600mA	125V/250V
1012-0700	700mA	125V/250V
1012-0750	750mA	125V/250V
1012-0800	800mA	125V/250V
1012-1000	1A	125V/250V
1012-1200	1. 2A	125V/250V
1012-1250	1. 25A	125V/250V
1012-1500	1. 5A	125V/250V
1012-1600	1. 6A	125V/250V
1012-1800	1. 8A	125V/250V
1012-2000	2A	125V/250V
1012-2500	2. 5A	125V/250V
1012-3000	3A	125V/250V
1012-3150	3. 15A	125V/250V
1012-3500	3. 5A	125V/250V
1012-4000	4A	125V/250V
1012-5000	5A	125V/250V
1012-6000	6A	125V/250V
1012-6300	6. 3A	125V/250V
1012-7000	7A	125V/250V
1012-8000	8A	125V/250V
1012-10000	10A	125V/250V
1012-12000	12A	125V/250V
1012-15000	15A	125V/250V

Part No.	Rated Carrent	Voltage Rated
1011-0100	100mA	125V/250V
1011-0125	125mA	125V/250V
1011-0150	150mA	125V/250V
1011-0160	160mA	125V/250V
1011-0200	200mA	125V/250V
1011-0250	250mA	125V/250V
1011-0300	300mA	125V/250V
1011-0315	315mA	125V/250V
1011-0350	350mA	125V/250V
1011-0400	400mA	125V/250V
1011-0500	500mA	125V/250V
1011-0600	600mA	125V/250V
1011-0700	700mA	125V/250V
1011-0750	750mA	125V/250V
1011-0800	800mA	125V/250V
1011-1000	1A	125V/250V
1011-1200	1. 2A	125V/250V
1011-1250	1. 25A	125V/250V
1011-1500	1. 5A	125V/250V
1011-1600	1. 6A	125V/250V
1011-1800	1. 8A	125V/250V
1011-2000	2A	125V/250V
1011-2500	2. 5A	125V/250V
1011-3000	3A	125V/250V
1011-3150	3. 15A	125V/250V
1011-3500	3. 5A	125V/250V
1011-4000	4A	125V/250V
1011-5000	5A	125V/250V
1011-6000	6A	125V/250V
1011-6300	6. 3A	125V/250V
1011-7000	7A	125V/250V
1011-8000	8A	125V/250V
1011-10000	10A	125V/250V
1011-12000	12A	125V/250V
1011-15000	15A	125V/250V

ORDER INFORMATION

Product NO.: KLS5-1012-XXXX

- Rated Carrent
- Lead Type:1011=With Lead 1012=No Lead
- Part Number

Φ3.6x10 Ceramic Tube Fuse Series

KLS5-1013/1014 Φ3.6x10 Ceramic Tube Fuse (Slow Blow) Series

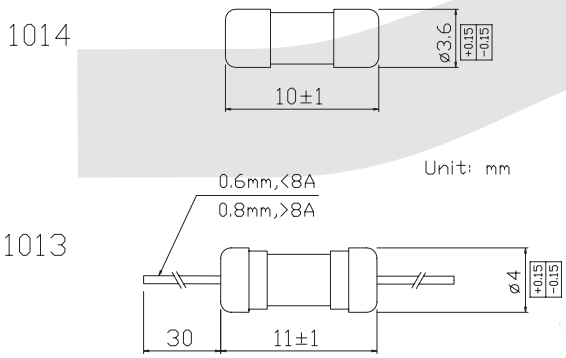



ELECTRICAL CHARACTERISTICS

RATING	BLOWING TIME
100%	4 hours Min
200%	1-60 Sec Max

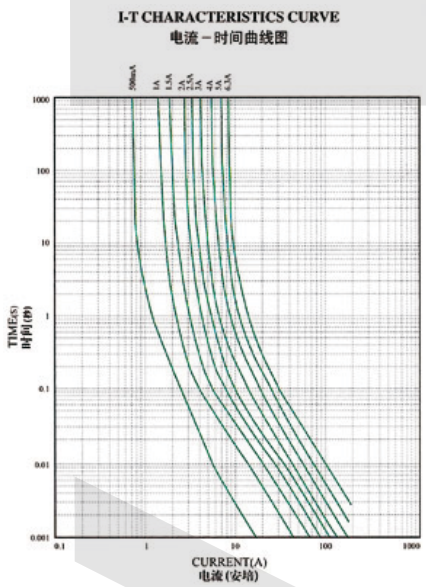

Part No.	Rated Carrent	Rated Voltage
1014-0100	100mA	125V/250V
1014-0125	125mA	125V/250V
1014-0150	150mA	125V/250V
1014-0160	160mA	125V/250V
1014-0200	200mA	125V/250V
1014-0250	250mA	125V/250V
1014-0300	300mA	125V/250V
1014-0315	315mA	125V/250V
1014-0350	350mA	125V/250V
1014-0400	400mA	125V/250V
1014-0500	500mA	125V/250V
1014-0600	600mA	125V/250V
1014-0700	700mA	125V/250V
1014-0750	750mA	125V/250V
1014-0800	800mA	125V/250V
1014-1000	1A	125V/250V
1014-1200	1.2A	125V/250V
1014-1250	1.25A	125V/250V
1014-1500	1.5A	125V/250V
1014-1600	1.6A	125V/250V
1014-1800	1.8A	125V/250V
1014-2000	2A	125V/250V
1014-2500	2.5A	125V/250V
1014-3000	3A	125V/250V
1014-3150	3.15A	125V/250V
1014-3500	3.5A	125V/250V
1014-4000	4A	125V/250V
1014-5000	5A	125V/250V
1014-6000	6A	125V/250V
1014-6300	6.3A	125V/250V
1014-7000	7A	125V/250V
1014-8000	8A	125V/250V
1014-10000	10A	125V/250V
1014-12000	12A	125V/250V
1014-15000	15A	125V/250V

Part No.	Rated Carrent	Rated Voltage
1013-0100	100mA	125V/250V
1013-0125	125mA	125V/250V
1013-0150	150mA	125V/250V
1013-0160	160mA	125V/250V
1013-0200	200mA	125V/250V
1013-0250	250mA	125V/250V
1013-0300	300mA	125V/250V
1013-0315	315mA	125V/250V
1013-0350	350mA	125V/250V
1013-0400	400mA	125V/250V
1013-0500	500mA	125V/250V
1013-0600	600mA	125V/250V
1013-0700	700mA	125V/250V
1013-0750	750mA	125V/250V
1013-0800	800mA	125V/250V
1013-1000	1A	125V/250V
1013-1200	1.2A	125V/250V
1013-1250	1.25A	125V/250V
1013-1500	1.5A	125V/250V
1013-1600	1.6A	125V/250V
1013-1800	1.8A	125V/250V
1013-2000	2A	125V/250V
1013-2500	2.5A	125V/250V
1013-3000	3A	125V/250V
1013-3150	3.15A	125V/250V
1013-3500	3.5A	125V/250V
1013-4000	4A	125V/250V
1013-5000	5A	125V/250V
1013-6000	6A	125V/250V
1013-6300	6.3A	125V/250V
1013-7000	7A	125V/250V
1013-8000	8A	125V/250V
1013-10000	10A	125V/250V
1013-12000	12A	125V/250V
1013-15000	15A	125V/250V

ORDER INFORMATION

Product NO.: KLS5-1013-XXXX

- Rated Carrent
- Lead Type:1013=With Lead 1014=No Lead
- Part Number

Φ5.2x20 Glass Tube Fuse Series

KLS5-1019/1020 Outer weld Φ5.2x20 Glass Tube Fuse (Fast Blow) Series

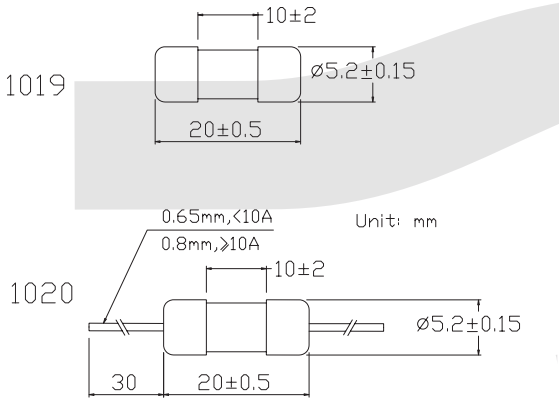

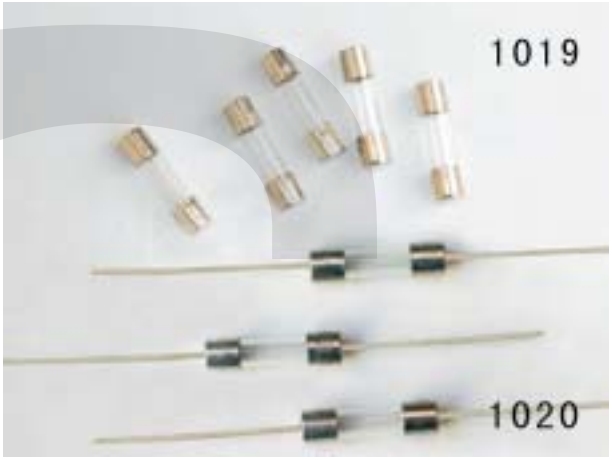

ELECTRICAL CHARACTERISTICS

RATING		≥32mA - 100mA	>100mA - 6.3A
2.1In	Max	30 min	30 min
2.75In	Min	10 ms	50 ms
	Max	500 ms	2 s
4In	Min	3 ms	10 ms
	Max	100 ms	300 ms
10In	Max	20 ms	20 ms

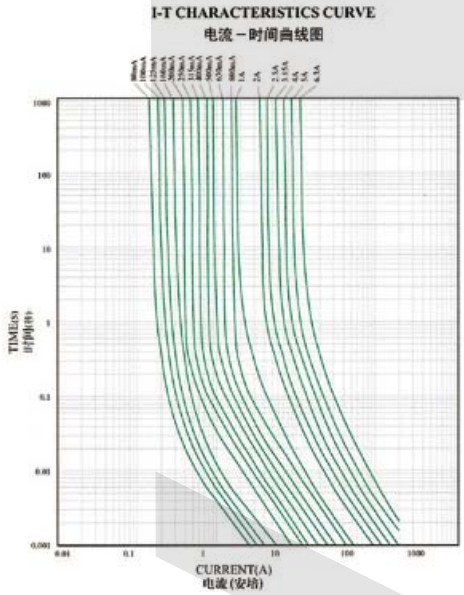

Part No.	Rated Carrent	Mv Voltage Drop	Rated Voltage
1020-0100	100mA	3500	125V/250V
1020-0125	125mA	2100	125V/250V
1020-0150	150mA	2100	125V/250V
1020-0160	160mA	2000	125V/250V
1020-0200	200mA	1700	125V/250V
1020-0250	250mA	1400	125V/250V
1020-0300	300mA	1300	125V/250V
1020-0315	315mA	1300	125V/250V
1020-0350	350mA	1300	125V/250V
1020-0400	400mA	1200	125V/250V
1020-0500	500mA	1000	125V/250V
1020-0600	600mA	650	125V/250V
1020-0700	700mA	650	125V/250V
1020-0750	750mA	600	125V/250V
1020-0800	800mA	240	125V/250V
1020-1000	1A	200	125V/250V
1020-1200	1.2A	200	125V/250V
1020-1250	1.25A	200	125V/250V
1020-1500	1.5A	200	125V/250V
1020-1600	1.6A	190	125V/250V
1020-1800	1.8A	190	125V/250V
1020-2000	2A	170	125V/250V
1020-2500	2.5A	170	125V/250V
1020-3000	3A	150	125V/250V
1020-3150	3.15A	150	125V/250V
1020-3500	3.5A	150	125V/250V
1020-4000	4A	130	125V/250V
1020-5000	5A	130	125V/250V
1020-6000	6A	130	125V/250V
1020-6300	6.3A	130	125V/250V
1020-7000	7A	120	125V/250V
1020-8000	8A	100	125V/250V
1020-10000	10A	100	125V/250V
1020-12000	12A	100	125V/250V
1020-15000	15A	100	125V/250V

Part No.	Rated Carrent	Mv Voltage Drop	Rated Voltage
1019-0100	100mA	3500	125V/250V
1019-0125	125mA	2100	125V/250V
1019-0150	150mA	2100	125V/250V
1019-0160	160mA	2000	125V/250V
1019-0200	200mA	1700	125V/250V
1019-0250	250mA	1400	125V/250V
1019-0300	300mA	1300	125V/250V
1019-0315	315mA	1300	125V/250V
1019-0350	350mA	1300	125V/250V
1019-0400	400mA	1200	125V/250V
1019-0500	500mA	1000	125V/250V
1019-0600	600mA	650	125V/250V
1019-0700	700mA	650	125V/250V
1019-0750	750mA	600	125V/250V
1019-0800	800mA	240	125V/250V
1019-1000	1A	200	125V/250V
1019-1200	1.2A	200	125V/250V
1019-1250	1.25A	200	125V/250V
1019-1500	1.5A	200	125V/250V
1019-1600	1.6A	190	125V/250V
1019-1800	1.8A	190	125V/250V
1019-2000	2A	170	125V/250V
1019-2500	2.5A	170	125V/250V
1019-3000	3A	150	125V/250V
1019-3150	3.15A	150	125V/250V
1019-3500	3.5A	150	125V/250V
1019-4000	4A	130	125V/250V
1019-5000	5A	130	125V/250V
1019-6000	6A	130	125V/250V
1019-6300	6.3A	130	125V/250V
1019-7000	7A	120	125V/250V
1019-8000	8A	100	125V/250V
1019-10000	10A	100	125V/250V
1019-12000	12A	100	125V/250V
1019-15000	15A	100	125V/250V

ORDER INFORMATION

Product NO.: KLS5-1019-XXXX

- Rated Carrent
- Lead Type:1019=No Lead 1020=With Lead
- Part Number

V

Φ5.2x20 Glass Tube Fuse Series

KLS5-1021/1022 Inner weld Φ5.2x20 Glass Tube Fuse (Fast Blow) Series

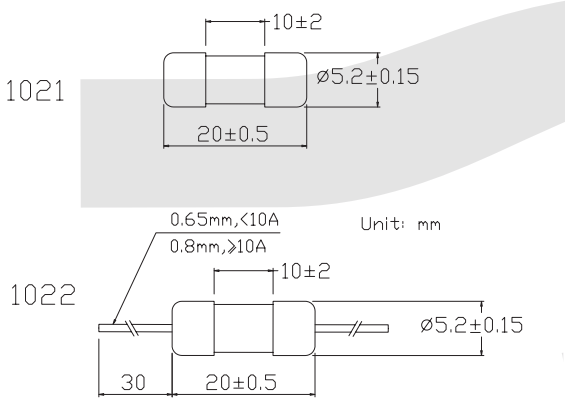

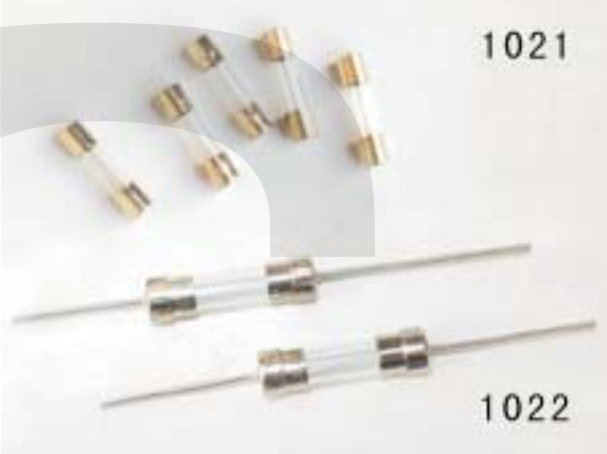

ELECTRICAL CHARACTERISTICS

RATING		≥32mA – 100mA	>100mA – 6.3A
2.1In	Max	30 min	30 min
2.75In	Min	10 ms	50 ms
	Max	500 ms	2 s
4In	Min	3 ms	10 ms
	Max	100 ms	300 ms
10In	Max	20 ms	20 ms

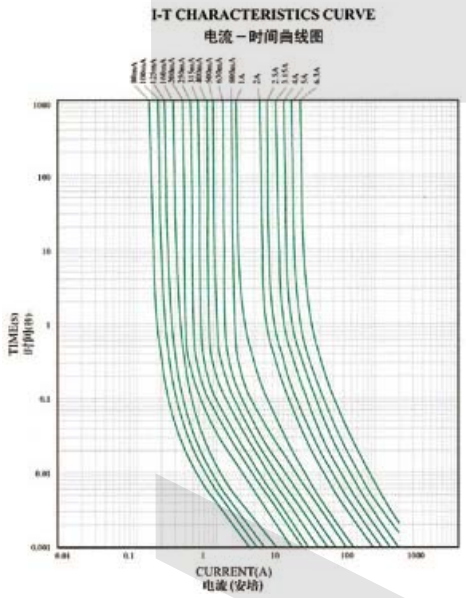

Part No.	Rated Carrent	Mv Voltage Drop	Rated Voltage
1022-0100	100mA	3500	125V/250V
1022-0125	125mA	2100	125V/250V
1022-0150	150mA	2100	125V/250V
1022-0160	160mA	2000	125V/250V
1022-0200	200mA	1700	125V/250V
1022-0250	250mA	1400	125V/250V
1022-0300	300mA	1300	125V/250V
1022-0315	315mA	1300	125V/250V
1022-0350	350mA	1300	125V/250V
1022-0400	400mA	1200	125V/250V
1022-0500	500mA	1000	125V/250V
1022-0600	600mA	650	125V/250V
1022-0700	700mA	650	125V/250V
1022-0750	750mA	600	125V/250V
1022-0800	800mA	240	125V/250V
1022-1000	1A	200	125V/250V
1022-1200	1.2A	200	125V/250V
1022-1250	1.25A	200	125V/250V
1022-1500	1.5A	200	125V/250V
1022-1600	1.6A	190	125V/250V
1022-1800	1.8A	190	125V/250V
1022-2000	2A	170	125V/250V
1022-2500	2.5A	170	125V/250V
1022-3000	3A	150	125V/250V
1022-3150	3.15A	150	125V/250V
1022-3500	3.5A	150	125V/250V
1022-4000	4A	130	125V/250V
1022-5000	5A	130	125V/250V
1022-6000	6A	130	125V/250V
1022-6300	6.3A	130	125V/250V
1022-7000	7A	120	125V/250V
1022-8000	8A	100	125V/250V
1022-10000	10A	100	125V/250V
1022-12000	12A	100	125V/250V
1022-15000	15A	100	125V/250V

Part No.	Rated Carrent	Mv Voltage Drop	Rated Voltage
1021-0100	100mA	3500	125V/250V
1021-0125	125mA	2100	125V/250V
1021-0150	150mA	2100	125V/250V
1021-0160	160mA	2000	125V/250V
1021-0200	200mA	1700	125V/250V
1021-0250	250mA	1400	125V/250V
1021-0300	300mA	1300	125V/250V
1021-0315	315mA	1300	125V/250V
1021-0350	350mA	1300	125V/250V
1021-0400	400mA	1200	125V/250V
1021-0500	500mA	1000	125V/250V
1021-0600	600mA	650	125V/250V
1021-0700	700mA	650	125V/250V
1021-0750	750mA	600	125V/250V
1021-0800	800mA	240	125V/250V
1021-1000	1A	200	125V/250V
1021-1200	1.2A	200	125V/250V
1021-1250	1.25A	200	125V/250V
1021-1500	1.5A	200	125V/250V
1021-1600	1.6A	190	125V/250V
1021-1800	1.8A	190	125V/250V
1021-2000	2A	170	125V/250V
1021-2500	2.5A	170	125V/250V
1021-3000	3A	150	125V/250V
1021-3150	3.15A	150	125V/250V
1021-3500	3.5A	150	125V/250V
1021-4000	4A	130	125V/250V
1021-5000	5A	130	125V/250V
1021-6000	6A	130	125V/250V
1021-6300	6.3A	130	125V/250V
1021-7000	7A	120	125V/250V
1021-8000	8A	100	125V/250V
1021-10000	10A	100	125V/250V
1021-12000	12A	100	125V/250V
1021-15000	15A	100	125V/250V

ORDER INFORMATION

Product NO.: KLS5-1021-XXXX

- XXXX: Rated Carrent
- 1021: Lead Type: 1021=No Lead 1022=With Lead
- KLS5: Part Number

Φ5.2x20 Glass Tube Fuse Series

KLS5-1027/1028 Φ5.2x20 Glass Tube Fuse (Medium Slow Blow) Series

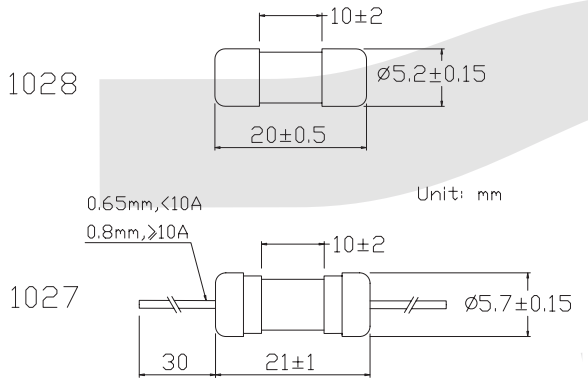

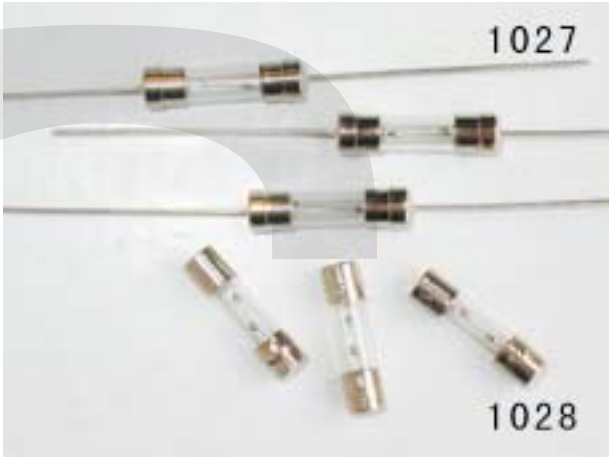

ELECTRICAL CHARACTERISTICS

RATING	BLOWING Time
130%	1 hours Min
160%	1 hours Max
200%	120 sec Max

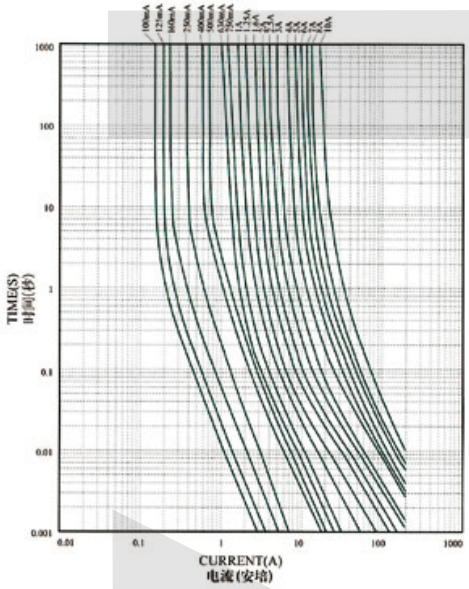

Part No.	Rated Carrent	Rated Voltage
1028-0100	100mA	125V/250V
1028-0125	125mA	125V/250V
1028-0150	150mA	125V/250V
1028-0160	160mA	125V/250V
1028-0200	200mA	125V/250V
1028-0250	250mA	125V/250V
1028-0300	300mA	125V/250V
1028-0315	315mA	125V/250V
1028-0350	350mA	125V/250V
1028-0400	400mA	125V/250V
1028-0500	500mA	125V/250V
1028-0600	600mA	125V/250V
1028-0700	700mA	125V/250V
1028-0750	750mA	125V/250V
1028-0800	800mA	125V/250V
1028-1000	1A	125V/250V
1028-1200	1.2A	125V/250V
1028-1250	1.25A	125V/250V
1028-1500	1.5A	125V/250V
1028-1600	1.6A	125V/250V
1028-1800	1.8A	125V/250V
1028-2000	2A	125V/250V
1028-2500	2.5A	125V/250V
1028-3000	3A	125V/250V
1028-3150	3.15A	125V/250V
1028-3500	3.5A	125V/250V
1028-4000	4A	125V/250V
1028-5000	5A	125V/250V
1028-6000	6A	125V/250V
1028-6300	6.3A	125V/250V
1028-7000	7A	125V/250V
1028-8000	8A	125V/250V
1028-10000	10A	125V/250V
1028-12000	12A	125V/250V
1028-15000	15A	125V/250V

Part No.	Rated Carrent	Rated Voltage
1027-0100	100mA	125V/250V
1027-0125	125mA	125V/250V
1027-0150	150mA	125V/250V
1027-0160	160mA	125V/250V
1027-0200	200mA	125V/250V
1027-0250	250mA	125V/250V
1027-0300	300mA	125V/250V
1027-0315	315mA	125V/250V
1027-0350	350mA	125V/250V
1027-0400	400mA	125V/250V
1027-0500	500mA	125V/250V
1027-0600	600mA	125V/250V
1027-0700	700mA	125V/250V
1027-0750	750mA	125V/250V
1027-0800	800mA	125V/250V
1027-1000	1A	125V/250V
1027-1200	1.2A	125V/250V
1027-1250	1.25A	125V/250V
1027-1500	1.5A	125V/250V
1027-1600	1.6A	125V/250V
1027-1800	1.8A	125V/250V
1027-2000	2A	125V/250V
1027-2500	2.5A	125V/250V
1027-3000	3A	125V/250V
1027-3150	3.15A	125V/250V
1027-3500	3.5A	125V/250V
1027-4000	4A	125V/250V
1027-5000	5A	125V/250V
1027-6000	6A	125V/250V
1027-6300	6.3A	125V/250V
1027-7000	7A	125V/250V
1027-8000	8A	125V/250V
1027-10000	10A	125V/250V
1027-12000	12A	125V/250V
1027-15000	15A	125V/250V

ORDER INFORMATION

Product NO.: KLS5-1027-XXXX

- Rated Carrent
- Lead Type:1027=With Lead 1028=No Lead
- Part Number

Φ5.2x20 Glass Tube Fuse Series

KLS5-1029/1030 Φ5.2x20 Glass Tube Fuse (Medium Fast Blow) Series

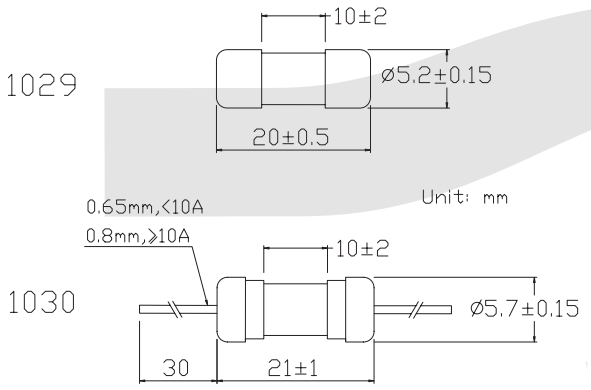



ELECTRICAL CHARACTERISTICS

RATING	BLOWING Time
130%	1 hours Min
160%	1 hours Max
200%	120 sec Max

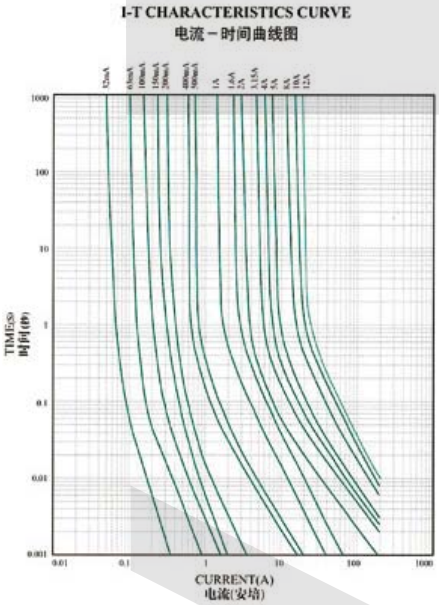

Part No.	Rated Carrent	Rated Voltage
1030-0100	100mA	125V/250V
1030-0125	125mA	125V/250V
1030-0150	150mA	125V/250V
1030-0160	160mA	125V/250V
1030-0200	200mA	125V/250V
1030-0250	250mA	125V/250V
1030-0300	300mA	125V/250V
1030-0315	315mA	125V/250V
1030-0350	350mA	125V/250V
1030-0400	400mA	125V/250V
1030-0500	500mA	125V/250V
1030-0600	600mA	125V/250V
1030-0700	700mA	125V/250V
1030-0750	750mA	125V/250V
1030-0800	800mA	125V/250V
1030-1000	1A	125V/250V
1030-1200	1. 2A	125V/250V
1030-1250	1. 25A	125V/250V
1030-1500	1. 5A	125V/250V
1030-1600	1. 6A	125V/250V
1030-1800	1. 8A	125V/250V
1030-2000	2A	125V/250V
1030-2500	2. 5A	125V/250V
1030-3000	3A	125V/250V
1030-3150	3. 15A	125V/250V
1030-3500	3. 5A	125V/250V
1030-4000	4A	125V/250V
1030-5000	5A	125V/250V
1030-6000	6A	125V/250V
1030-6300	6. 3A	125V/250V
1030-7000	7A	125V/250V
1030-8000	8A	125V/250V
1030-10000	10A	125V/250V
1030-12000	12A	125V/250V
1030-15000	15A	125V/250V

Part No.	Rated Carrent	Rated Voltage
1029-0100	100mA	125V/250V
1029-0125	125mA	125V/250V
1029-0150	150mA	125V/250V
1029-0160	160mA	125V/250V
1029-0200	200mA	125V/250V
1029-0250	250mA	125V/250V
1029-0300	300mA	125V/250V
1029-0315	315mA	125V/250V
1029-0350	350mA	125V/250V
1029-0400	400mA	125V/250V
1029-0500	500mA	125V/250V
1029-0600	600mA	125V/250V
1029-0700	700mA	125V/250V
1029-0750	750mA	125V/250V
1029-0800	800mA	125V/250V
1029-1000	1A	125V/250V
1029-1200	1. 2A	125V/250V
1029-1250	1. 25A	125V/250V
1029-1500	1. 5A	125V/250V
1029-1600	1. 6A	125V/250V
1029-1800	1. 8A	125V/250V
1029-2000	2A	125V/250V
1029-2500	2. 5A	125V/250V
1029-3000	3A	125V/250V
1029-3150	3. 15A	125V/250V
1029-3500	3. 5A	125V/250V
1029-4000	4A	125V/250V
1029-5000	5A	125V/250V
1029-6000	6A	125V/250V
1029-6300	6. 3A	125V/250V
1029-7000	7A	125V/250V
1029-8000	8A	125V/250V
1029-10000	10A	125V/250V
1029-12000	12A	125V/250V
1029-15000	15A	125V/250V

ORDER INFORMATION

Product NO.: KLS5-1029-XXXX

- XXXX — Rated Carrent
- 1029 — Lead Type: 1029=No Lead 1030=With Lead
- KLS5 — Part Number

Φ5.2x20 Glass Tube Fuse Series

KLS5-1033/1034 Φ5.2x20 Glass Tube Fuse (Slow Blow) Series

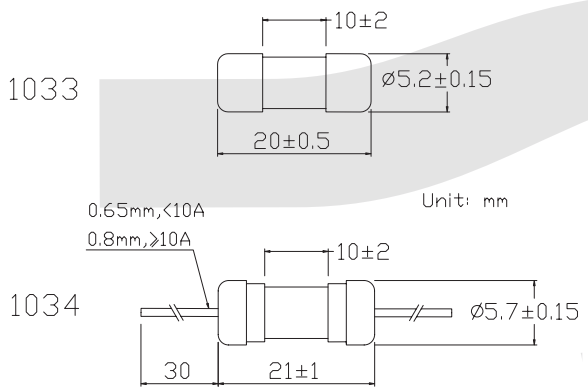

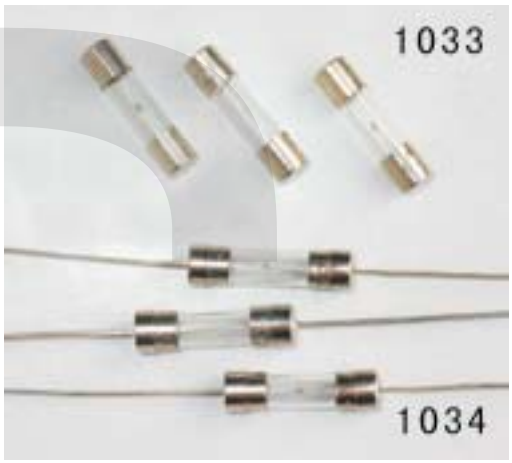

ELECTRICAL CHARACTERISTICS

RATING		32mA ~ 100mA	>125mA ~ 6.3A	8A ~ 15A
2.1In	Max	2 min	2 min	30 min
2.75In	Min	200 ms	600 ms	600 ms
	Max	10 s	10 s	10 s
4In	Min	40 ms	150 ms	150 ms
	Max	3 s	3 s	3 s
10In	Min	10 ms	20 ms	20 ms
	Max	300 ms	300 ms	300 ms

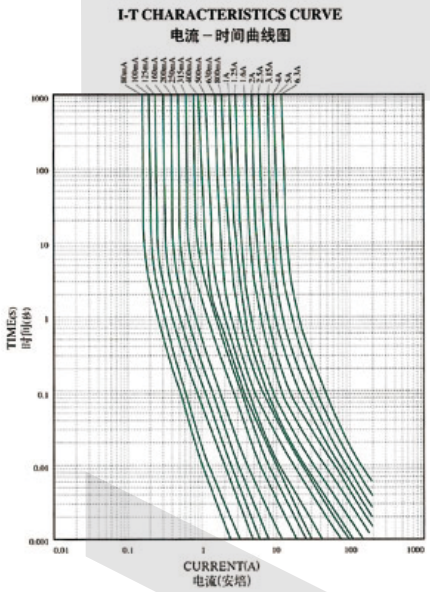

Part No.	Rated Carrent	Mv Voltage Drop	Rated Voltage
1034-0100	100mA	2500	125V/250V
1034-0125	125mA	2000	125V/250V
1034-0150	150mA	1900	125V/250V
1034-0160	160mA	1900	125V/250V
1034-0200	200mA	1500	125V/250V
1034-0250	250mA	1300	125V/250V
1034-0300	300mA	1100	125V/250V
1034-0315	315mA	1100	125V/250V
1034-0350	350mA	1100	125V/250V
1034-0400	400mA	1000	125V/250V
1034-0500	500mA	900	125V/250V
1034-0600	600mA	300	125V/250V
1034-0700	700mA	300	125V/250V
1034-0750	750mA	300	125V/250V
1034-0800	800mA	250	125V/250V
1034-1000	1A	150	125V/250V
1034-1200	1.2A	150	125V/250V
1034-1250	1.25A	150	125V/250V
1034-1500	1.5A	150	125V/250V
1034-1600	1.6A	150	125V/250V
1034-1800	1.8A	150	125V/250V
1034-2000	2A	150	125V/250V
1034-2500	2.5A	120	125V/250V
1034-3000	3A	100	125V/250V
1034-3150	3.15A	100	125V/250V
1034-3500	3.5A	100	125V/250V
1034-4000	4A	100	125V/250V
1034-5000	5A	100	125V/250V
1034-6000	6A	100	125V/250V
1034-6300	6.3A	100	125V/250V
1034-7000	7A	90	125V/250V
1034-8000	8A	90	125V/250V
1034-10000	10A	90	125V/250V
1034-12000	12A	90	125V/250V
1034-15000	15A	90	125V/250V

Part No.	Rated Carrent	Mv Voltage Drop	Rated Voltage
1033-0100	100mA	2500	125V/250V
1033-0125	125mA	2000	125V/250V
1033-0150	150mA	1900	125V/250V
1033-0160	160mA	1900	125V/250V
1033-0200	200mA	1500	125V/250V
1033-0250	250mA	1300	125V/250V
1033-0300	300mA	1100	125V/250V
1033-0315	315mA	1100	125V/250V
1033-0350	350mA	1100	125V/250V
1033-0400	400mA	1000	125V/250V
1033-0500	500mA	900	125V/250V
1033-0600	600mA	300	125V/250V
1033-0700	700mA	300	125V/250V
1033-0750	750mA	300	125V/250V
1033-0800	800mA	250	125V/250V
1033-1000	1A	150	125V/250V
1033-1200	1.2A	150	125V/250V
1033-1250	1.25A	150	125V/250V
1033-1500	1.5A	150	125V/250V
1033-1600	1.6A	150	125V/250V
1033-1800	1.8A	150	125V/250V
1033-2000	2A	150	125V/250V
1033-2500	2.5A	120	125V/250V
1033-3000	3A	100	125V/250V
1033-3150	3.15A	100	125V/250V
1033-3500	3.5A	100	125V/250V
1033-4000	4A	100	125V/250V
1033-5000	5A	100	125V/250V
1033-6000	6A	100	125V/250V
1033-6300	6.3A	100	125V/250V
1033-7000	7A	90	125V/250V
1033-8000	8A	90	125V/250V
1033-10000	10A	90	125V/250V
1033-12000	12A	90	125V/250V
1033-15000	15A	90	125V/250V

ORDER INFORMATION

Product NO.: KLS5-1033-XXXX

- Rated Carrent
- Lead Type:1033=No Lead 1034=With Lead
- Part Number

Φ5.2x20 Glass Tube Fuse Series

KLS5-1035/1036 Φ5.2x20 Glass Tube Fuse (Fast Blow) Series

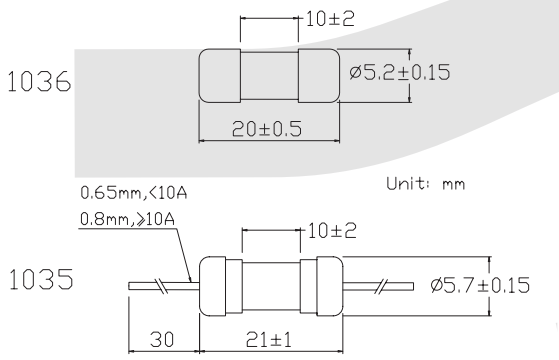

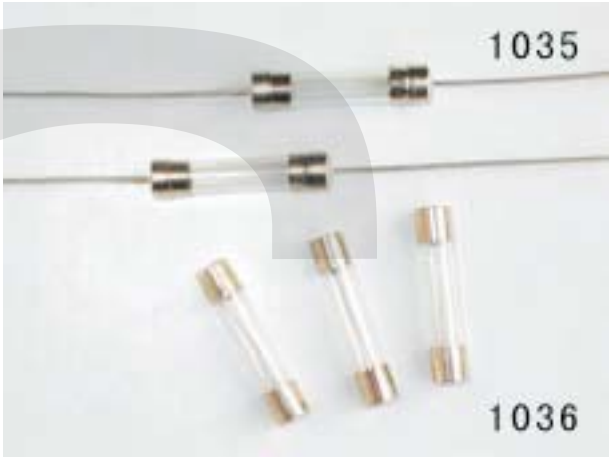

ELECTRICAL CHARACTERISTICS

RATING	Blowing Time
100%	4 hours Min
135%	1 hours Max
200%	5 sec Max

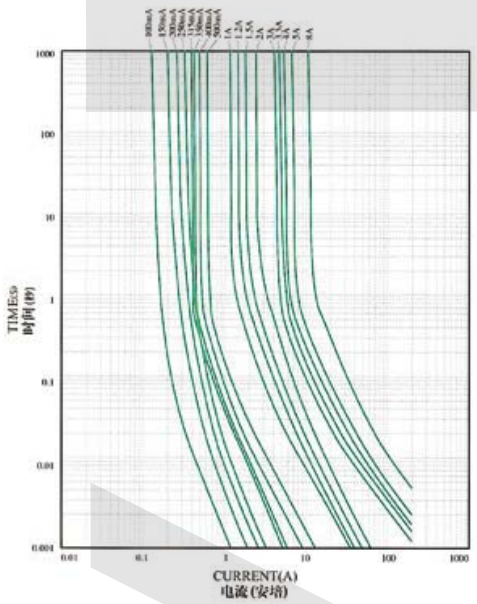

Part No.	Rated Carrent	Rated Voltage
1036-0100	100mA	125V/250V
1036-0125	125mA	125V/250V
1036-0150	150mA	125V/250V
1036-0160	160mA	125V/250V
1036-0200	200mA	125V/250V
1036-0250	250mA	125V/250V
1036-0300	300mA	125V/250V
1036-0315	315mA	125V/250V
1036-0350	350mA	125V/250V
1036-0400	400mA	125V/250V
1036-0500	500mA	125V/250V
1036-0600	600mA	125V/250V
1036-0700	700mA	125V/250V
1036-0750	750mA	125V/250V
1036-0800	800mA	125V/250V
1036-1000	1A	125V/250V
1036-1200	1. 2A	125V/250V
1036-1250	1. 25A	125V/250V
1036-1500	1. 5A	125V/250V
1036-1600	1. 6A	125V/250V
1036-1800	1. 8A	125V/250V
1036-2000	2A	125V/250V
1036-2500	2. 5A	125V/250V
1036-3000	3A	125V/250V
1036-3150	3. 15A	125V/250V
1036-3500	3. 5A	125V/250V
1036-4000	4A	125V/250V
1036-5000	5A	125V/250V
1036-6000	6A	125V/250V
1036-6300	6. 3A	125V/250V
1036-7000	7A	125V/250V
1036-8000	8A	125V/250V
1036-10000	10A	125V/250V
1036-12000	12A	125V/250V
1036-15000	15A	125V/250V

Part No.	Rated Carrent	Rated Voltage
1035-0100	100mA	125V/250V
1035-0125	125mA	125V/250V
1035-0150	150mA	125V/250V
1035-0160	160mA	125V/250V
1035-0200	200mA	125V/250V
1035-0250	250mA	125V/250V
1035-0300	300mA	125V/250V
1035-0315	315mA	125V/250V
1035-0350	350mA	125V/250V
1035-0400	400mA	125V/250V
1035-0500	500mA	125V/250V
1035-0600	600mA	125V/250V
1035-0700	700mA	125V/250V
1035-0750	750mA	125V/250V
1035-0800	800mA	125V/250V
1035-1000	1A	125V/250V
1035-1200	1. 2A	125V/250V
1035-1250	1. 25A	125V/250V
1035-1500	1. 5A	125V/250V
1035-1600	1. 6A	125V/250V
1035-1800	1. 8A	125V/250V
1035-2000	2A	125V/250V
1035-2500	2. 5A	125V/250V
1035-3000	3A	125V/250V
1035-3150	3. 15A	125V/250V
1035-3500	3. 5A	125V/250V
1035-4000	4A	125V/250V
1035-5000	5A	125V/250V
1035-6000	6A	125V/250V
1035-6300	6. 3A	125V/250V
1035-7000	7A	125V/250V
1035-8000	8A	125V/250V
1035-10000	10A	125V/250V
1035-12000	12A	125V/250V
1035-15000	15A	125V/250V

ORDER INFORMATION

Product NO.: KLS5-1035-XXXX

- Rated Carrent
- Lead Type:1035=With Lead 1036=No Lead
- Part Number

Φ5.2x20 Glass Tube Fuse Series

KLS5-1037/1038 Φ5.2x20 Glass Tube Fuse (Slow Blow) Series

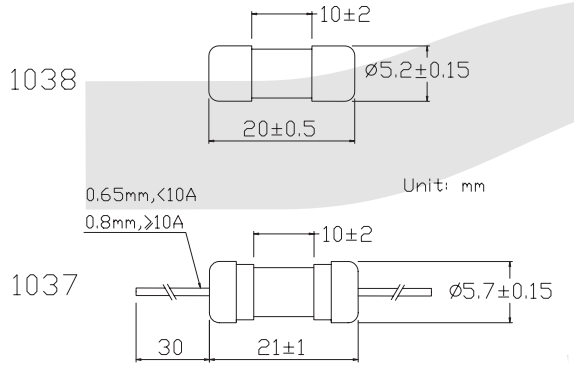

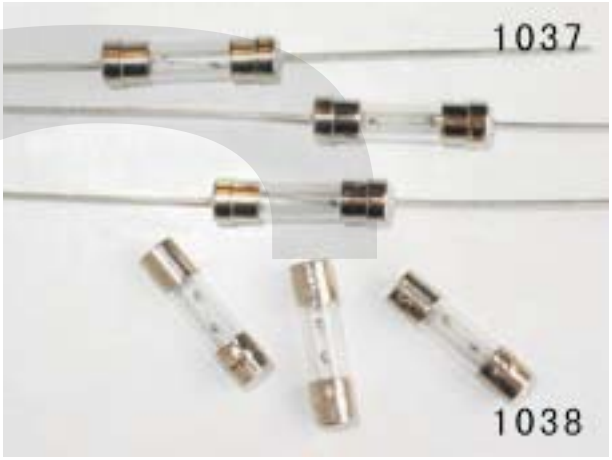

ELECTRICAL CHARACTERISTICS

RATING	Blowing Time
100%	4 hours Min
135%	1 hours Max
200%	5 sec Max

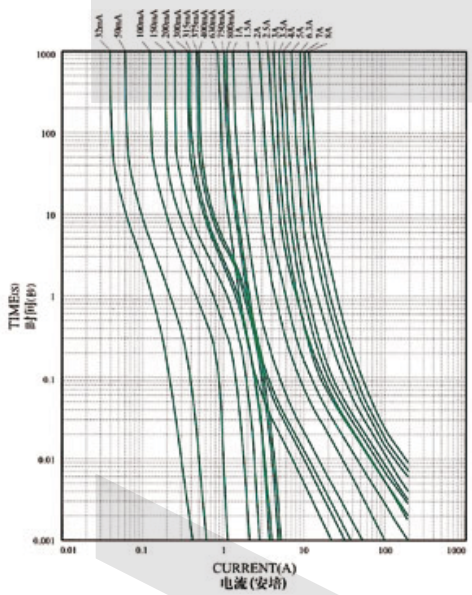

Part No.	Rated Carrent	Rated Voltage
1038-0100	100mA	125V/250V
1038-0125	125mA	125V/250V
1038-0150	150mA	125V/250V
1038-0160	160mA	125V/250V
1038-0200	200mA	125V/250V
1038-0250	250mA	125V/250V
1038-0300	300mA	125V/250V
1038-0315	315mA	125V/250V
1038-0350	350mA	125V/250V
1038-0400	400mA	125V/250V
1038-0500	500mA	125V/250V
1038-0600	600mA	125V/250V
1038-0700	700mA	125V/250V
1038-0750	750mA	125V/250V
1038-0800	800mA	125V/250V
1038-1000	1A	125V/250V
1038-1200	1.2A	125V/250V
1038-1250	1.25A	125V/250V
1038-1500	1.5A	125V/250V
1038-1600	1.6A	125V/250V
1038-1800	1.8A	125V/250V
1038-2000	2A	125V/250V
1038-2500	2.5A	125V/250V
1038-3000	3A	125V/250V
1038-3150	3.15A	125V/250V
1038-3500	3.5A	125V/250V
1038-4000	4A	125V/250V
1038-5000	5A	125V/250V
1038-6000	6A	125V/250V
1038-6300	6.3A	125V/250V
1038-7000	7A	125V/250V
1038-8000	8A	125V/250V
1038-10000	10A	125V/250V
1038-12000	12A	125V/250V
1038-15000	15A	125V/250V

Part No.	Rated Carrent	Rated Voltage
1037-0100	100mA	125V/250V
1037-0125	125mA	125V/250V
1037-0150	150mA	125V/250V
1037-0160	160mA	125V/250V
1037-0200	200mA	125V/250V
1037-0250	250mA	125V/250V
1037-0300	300mA	125V/250V
1037-0315	315mA	125V/250V
1037-0350	350mA	125V/250V
1037-0400	400mA	125V/250V
1037-0500	500mA	125V/250V
1037-0600	600mA	125V/250V
1037-0700	700mA	125V/250V
1037-0750	750mA	125V/250V
1037-0800	800mA	125V/250V
1037-1000	1A	125V/250V
1037-1200	1.2A	125V/250V
1037-1250	1.25A	125V/250V
1037-1500	1.5A	125V/250V
1037-1600	1.6A	125V/250V
1037-1800	1.8A	125V/250V
1037-2000	2A	125V/250V
1037-2500	2.5A	125V/250V
1037-3000	3A	125V/250V
1037-3150	3.15A	125V/250V
1037-3500	3.5A	125V/250V
1037-4000	4A	125V/250V
1037-5000	5A	125V/250V
1037-6000	6A	125V/250V
1037-6300	6.3A	125V/250V
1037-7000	7A	125V/250V
1037-8000	8A	125V/250V
1037-10000	10A	125V/250V
1037-12000	12A	125V/250V
1037-15000	15A	125V/250V

ORDER INFORMATION

Product NO.: KLS5-1037-XXXX

- Rated Carrent
- Lead Type:1037=With Lead 1038=No Lead
- Part Number

Φ5.2x20 Ceramic Tube Fuse Series

KLS5-1039/1040 Φ5.2x20 Ceramic Tube Fuse (Fast Blow) Series

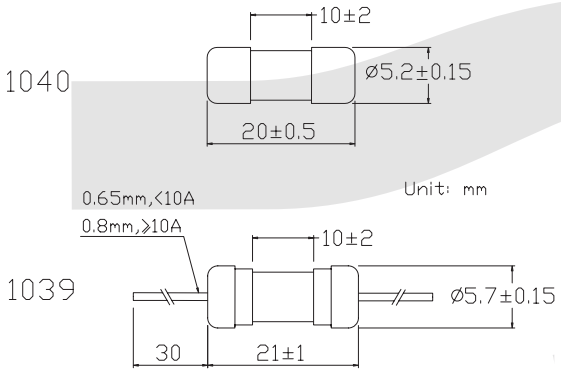

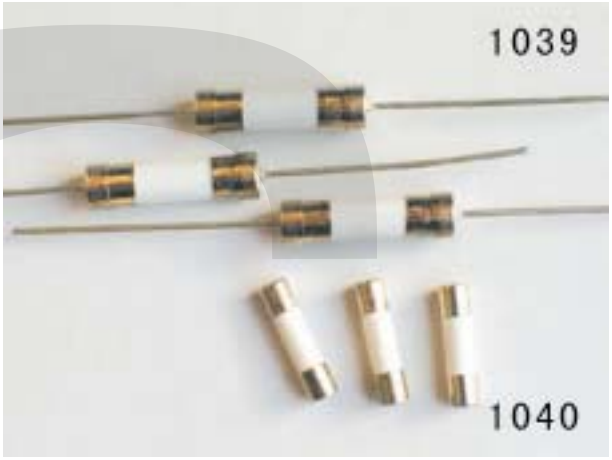

ELECTRICAL CHARACTERISTICS

RATING		100mA – 10A
2.1In	Max	30 min
2.75In	Min	10 ms
	Max	3 s
4In	Min	3 ms
	Max	300 ms
10In	Max	20 ms

I-T CHARACTERISTICS CURVE
电流－时间曲线图

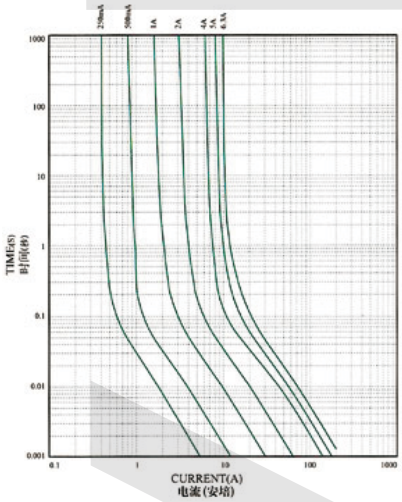

Part No.	Rated Carrent	Rated Voltage
1040-0100	100mA	125V/250V
1040-0125	125mA	125V/250V
1040-0150	150mA	125V/250V
1040-0160	160mA	125V/250V
1040-0200	200mA	125V/250V
1040-0250	250mA	125V/250V
1040-0300	300mA	125V/250V
1040-0315	315mA	125V/250V
1040-0350	350mA	125V/250V
1040-0400	400mA	125V/250V
1040-0500	500mA	125V/250V
1040-0600	600mA	125V/250V
1040-0700	700mA	125V/250V
1040-0750	750mA	125V/250V
1040-0800	800mA	125V/250V
1040-1000	1A	125V/250V
1040-1200	1.2A	125V/250V
1040-1250	1.25A	125V/250V
1040-1500	1.5A	125V/250V
1040-1600	1.6A	125V/250V
1040-1800	1.8A	125V/250V
1040-2000	2A	125V/250V
1040-2500	2.5A	125V/250V
1040-3000	3A	125V/250V
1040-3150	3.15A	125V/250V
1040-3500	3.5A	125V/250V
1040-4000	4A	125V/250V
1040-5000	5A	125V/250V
1040-6000	6A	125V/250V
1040-6300	6.3A	125V/250V
1040-7000	7A	125V/250V
1040-8000	8A	125V/250V
1040-10000	10A	125V/250V
1040-12000	12A	125V/250V
1040-15000	15A	125V/250V
1040-20000	20A	125V/250V
1040-25000	25A	125V/250V
1040-30000	30A	125V/250V

Part No.	Rated Carrent	Rated Voltage
1039-0100	100mA	125V/250V
1039-0125	125mA	125V/250V
1039-0150	150mA	125V/250V
1039-0160	160mA	125V/250V
1039-0200	200mA	125V/250V
1039-0250	250mA	125V/250V
1039-0300	300mA	125V/250V
1039-0315	315mA	125V/250V
1039-0350	350mA	125V/250V
1039-0400	400mA	125V/250V
1039-0500	500mA	125V/250V
1039-0600	600mA	125V/250V
1039-0700	700mA	125V/250V
1039-0750	750mA	125V/250V
1039-0800	800mA	125V/250V
1039-1000	1A	125V/250V
1039-1200	1.2A	125V/250V
1039-1250	1.25A	125V/250V
1039-1500	1.5A	125V/250V
1039-1600	1.6A	125V/250V
1039-1800	1.8A	125V/250V
1039-2000	2A	125V/250V
1039-2500	2.5A	125V/250V
1039-3000	3A	125V/250V
1039-3150	3.15A	125V/250V
1039-3500	3.5A	125V/250V
1039-4000	4A	125V/250V
1039-5000	5A	125V/250V
1039-6000	6A	125V/250V
1039-6300	6.3A	125V/250V
1039-7000	7A	125V/250V
1039-8000	8A	125V/250V
1039-10000	10A	125V/250V
1039-12000	12A	125V/250V
1039-15000	15A	125V/250V
1039-20000	20A	125V/250V
1039-25000	25A	125V/250V
1039-30000	30A	125V/250V

ORDER INFORMATION

Product NO.: KLS5-1039-XXXX

- Rated Carrent
- Lead Type:1039=With Lead 1040=No Lead
- Part Number

Φ5.2x20 Ceramic Tube Fuse Series

KLS5-1041/1042 Φ5.2x20 Ceramic Tube Fuse (Slow Blow) Series

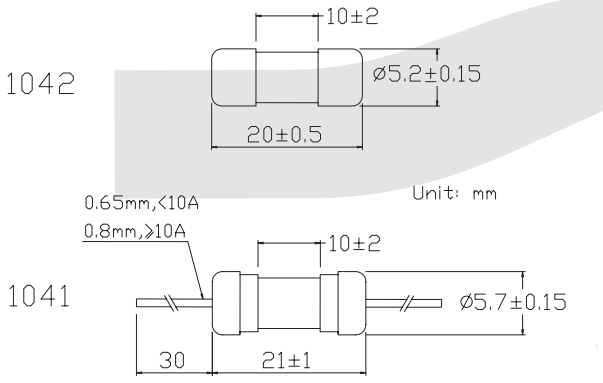

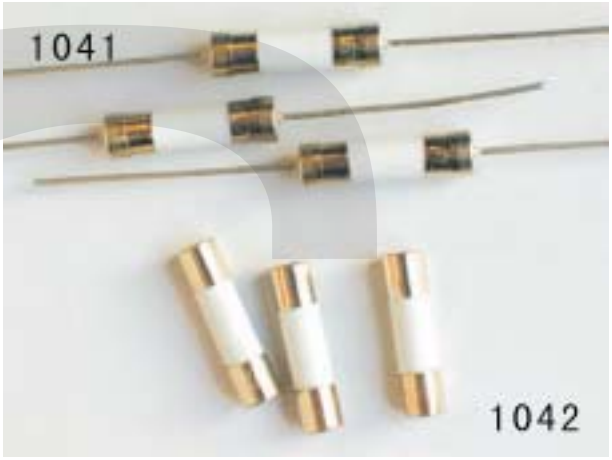

ELECTRICAL CHARACTERISTICS

RATING		200mA ~ 800mA	1A ~ 3.5A	3.15A ~ 6.3A	8A ~ 15A
2.1In	Max	30 min	30 min	30 min	30 min
2.75In	Min	400 ms	1 s	1 s	1 s
	Max	80 s	80 s	80 s	80 s
4In	Min	20 ms	95 ms	150 ms	150 ms
	Max	5 s	5 s	5 s	5 s
10In	Min	5 ms	10 ms	20 ms	20 ms
	Max	100 ms	100 ms	100 ms	120 ms

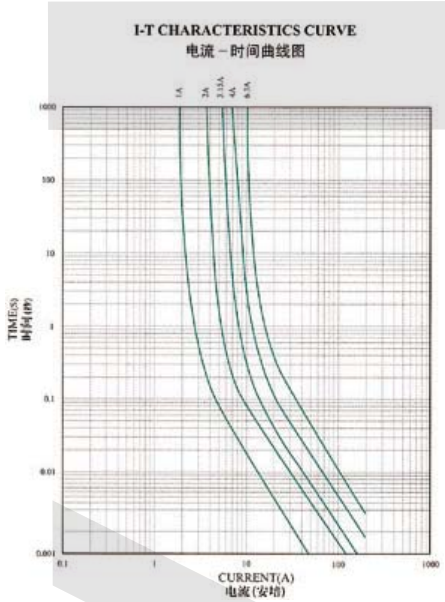

Part No.	Rated Carrent	Rated Voltage
1042-0100	100mA	125V/250V
1042-0125	125mA	125V/250V
1042-0150	150mA	125V/250V
1042-0160	160mA	125V/250V
1042-0200	200mA	125V/250V
1042-0250	250mA	125V/250V
1042-0300	300mA	125V/250V
1042-0315	315mA	125V/250V
1042-0350	350mA	125V/250V
1042-0400	400mA	125V/250V
1042-0500	500mA	125V/250V
1042-0600	600mA	125V/250V
1042-0700	700mA	125V/250V
1042-0750	750mA	125V/250V
1042-0800	800mA	125V/250V
1042-1000	1A	125V/250V
1042-1200	1.2A	125V/250V
1042-1250	1.25A	125V/250V
1042-1500	1.5A	125V/250V
1042-1600	1.6A	125V/250V
1042-1800	1.8A	125V/250V
1042-2000	2A	125V/250V
1042-2500	2.5A	125V/250V
1042-3000	3A	125V/250V
1042-3150	3.15A	125V/250V
1042-3500	3.5A	125V/250V
1042-4000	4A	125V/250V
1042-5000	5A	125V/250V
1042-6000	6A	125V/250V
1042-6300	6.3A	125V/250V
1042-7000	7A	125V/250V
1042-8000	8A	125V/250V
1042-10000	10A	125V/250V
1042-12000	12A	125V/250V
1042-15000	15A	125V/250V
1042-20000	20A	125V/250V
1042-25000	25A	125V/250V
1042-30000	30A	125V/250V

Part No.	Rated Carrent	Rated Voltage
1041-0100	100mA	125V/250V
1041-0125	125mA	125V/250V
1041-0150	150mA	125V/250V
1041-0160	160mA	125V/250V
1041-0200	200mA	125V/250V
1041-0250	250mA	125V/250V
1041-0300	300mA	125V/250V
1041-0315	315mA	125V/250V
1041-0350	350mA	125V/250V
1041-0400	400mA	125V/250V
1041-0500	500mA	125V/250V
1041-0600	600mA	125V/250V
1041-0700	700mA	125V/250V
1041-0750	750mA	125V/250V
1041-0800	800mA	125V/250V
1041-1000	1A	125V/250V
1041-1200	1.2A	125V/250V
1041-1250	1.25A	125V/250V
1041-1500	1.5A	125V/250V
1041-1600	1.6A	125V/250V
1041-1800	1.8A	125V/250V
1041-2000	2A	125V/250V
1041-2500	2.5A	125V/250V
1041-3000	3A	125V/250V
1041-3150	3.15A	125V/250V
1041-3500	3.5A	125V/250V
1041-4000	4A	125V/250V
1041-5000	5A	125V/250V
1041-6000	6A	125V/250V
1041-6300	6.3A	125V/250V
1041-7000	7A	125V/250V
1041-8000	8A	125V/250V
1041-10000	10A	125V/250V
1041-12000	12A	125V/250V
1041-15000	15A	125V/250V
1041-20000	20A	125V/250V
1041-25000	25A	125V/250V
1041-30000	30A	125V/250V

ORDER INFORMATION

Product NO.: KLS5-1041-XXXX

- XXXX — Rated Carrent
- 1041 — Lead Type: 1041=With Lead 1042=No Lead
- KLS5 — Part Number

Φ6.35x32(30) Glass Tube Fuse Series

KLS5-1043/1044 Outer weld Φ6.35x32(30) Glass Tube Fuse (Fast Blow) Series

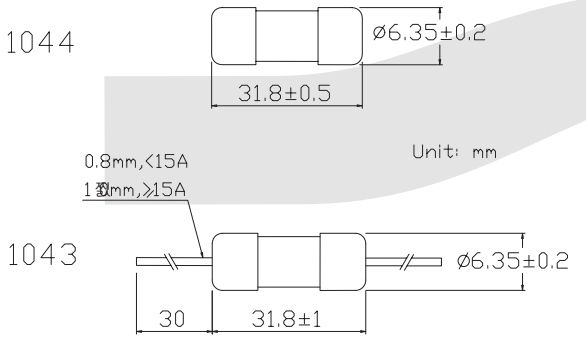

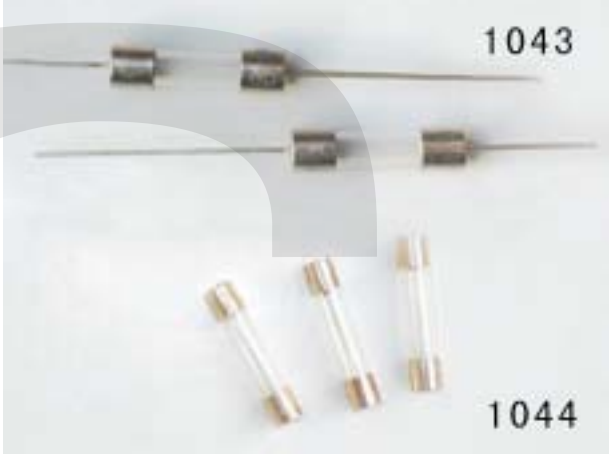

ELECTRICAL CHARACTERISTICS

RATING		⩾ 50mA – 100mA	>100mA – 10A
2.1In	Max	20 s	20 s
2.75In	Min	20 ms	20 ms
	Max	200 ms	1500 ms
4In	Min	1 ms	8ms
	Max	30 ms	400 ms
10In	Max	5 ms	80 ms

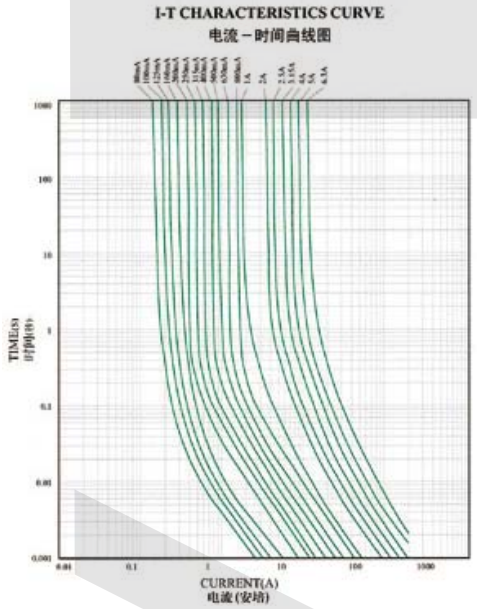

Part No.	Rated Carrent	Rated Voltage
1044-0100	100mA	125V/250V
1044-0125	125mA	125V/250V
1044-0150	150mA	125V/250V
1044-0160	160mA	125V/250V
1044-0200	200mA	125V/250V
1044-0250	250mA	125V/250V
1044-0300	300mA	125V/250V
1044-0315	315mA	125V/250V
1044-0350	350mA	125V/250V
1044-0400	400mA	125V/250V
1044-0500	500mA	125V/250V
1044-0600	600mA	125V/250V
1044-0700	700mA	125V/250V
1044-0750	750mA	125V/250V
1044-0800	800mA	125V/250V
1044-1000	1A	125V/250V
1044-1200	1.2A	125V/250V
1044-1250	1.25A	125V/250V
1044-1500	1.5A	125V/250V
1044-1600	1.6A	125V/250V
1044-1800	1.8A	125V/250V
1044-2000	2A	125V/250V
1044-2500	2.5A	125V/250V
1044-3000	3A	125V/250V
1044-3150	3.15A	125V/250V
1044-3500	3.5A	125V/250V
1044-4000	4A	125V/250V
1044-5000	5A	125V/250V
1044-6000	6A	125V/250V
1044-6300	6.3A	125V/250V
1044-7000	7A	125V/250V
1044-8000	8A	125V/250V
1044-10000	10A	125V/250V
1044-12000	12A	125V/250V
1044-15000	15A	125V/250V

Part No.	Rated Carrent	Rated Voltage
1043-0100	100mA	125V/250V
1043-0125	125mA	125V/250V
1043-0150	150mA	125V/250V
1043-0160	160mA	125V/250V
1043-0200	200mA	125V/250V
1043-0250	250mA	125V/250V
1043-0300	300mA	125V/250V
1043-0315	315mA	125V/250V
1043-0350	350mA	125V/250V
1043-0400	400mA	125V/250V
1043-0500	500mA	125V/250V
1043-0600	600mA	125V/250V
1043-0700	700mA	125V/250V
1043-0750	750mA	125V/250V
1043-0800	800mA	125V/250V
1043-1000	1A	125V/250V
1043-1200	1.2A	125V/250V
1043-1250	1.25A	125V/250V
1043-1500	1.5A	125V/250V
1043-1600	1.6A	125V/250V
1043-1800	1.8A	125V/250V
1043-2000	2A	125V/250V
1043-2500	2.5A	125V/250V
1043-3000	3A	125V/250V
1043-3150	3.15A	125V/250V
1043-3500	3.5A	125V/250V
1043-4000	4A	125V/250V
1043-5000	5A	125V/250V
1043-6000	6A	125V/250V
1043-6300	6.3A	125V/250V
1043-7000	7A	125V/250V
1043-8000	8A	125V/250V
1043-10000	10A	125V/250V
1043-12000	12A	125V/250V
1043-15000	15A	125V/250V

ORDER INFORMATION

Product NO.: KLS5-1043-XXXX

- Rated Carrent
- Lead Type:1043=With Lead 1044=No Lead
- Part Number

Φ6.35x32(30) Glass Tube Fuse Series

KLS5-1045/1046 Inner weld Φ6.35x32(30) Glass Tube Fuse (Fast Blow) Series

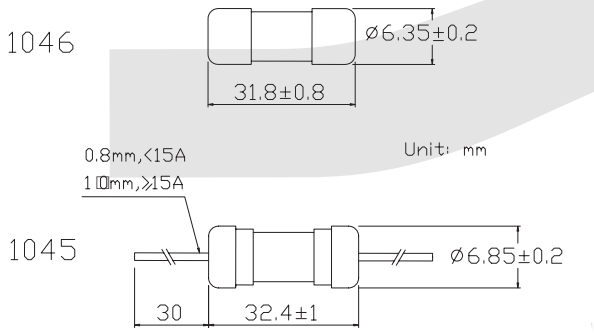

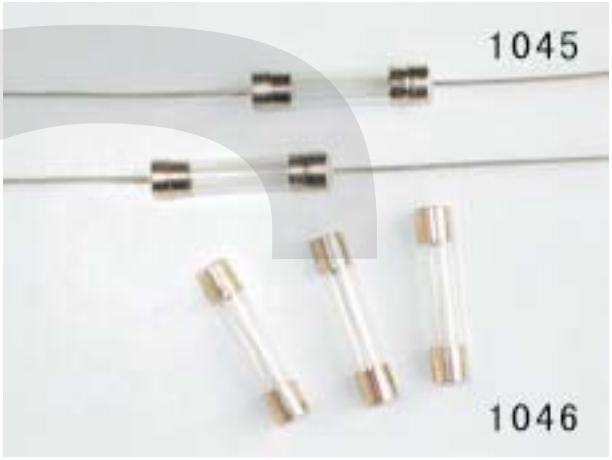

ELECTRICAL CHARACTERISTICS

RATING		≥ 50mA – 100mA	>100mA – 10A
2.1In	Max	20 s	20 s
2.75In	Min	20 ms	20 ms
	Max	200 ms	1500 ms
4In	Min	1 ms	8ms
	Max	30 ms	400 ms
10In	Max	5 ms	80 ms

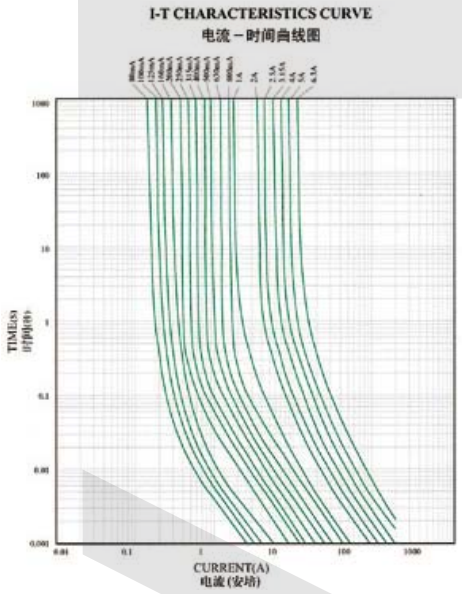

Part No.	Rated Carrent	Rated Voltage
1046-0100	100mA	125V/250V
1046-0125	125mA	125V/250V
1046-0150	150mA	125V/250V
1046-0160	160mA	125V/250V
1046-0200	200mA	125V/250V
1046-0250	250mA	125V/250V
1046-0300	300mA	125V/250V
1046-0315	315mA	125V/250V
1046-0350	350mA	125V/250V
1046-0400	400mA	125V/250V
1046-0500	500mA	125V/250V
1046-0600	600mA	125V/250V
1046-0700	700mA	125V/250V
1046-0750	750mA	125V/250V
1046-0800	800mA	125V/250V
1046-1000	1A	125V/250V
1046-1200	1.2A	125V/250V
1046-1250	1.25A	125V/250V
1046-1500	1.5A	125V/250V
1046-1600	1.6A	125V/250V
1046-1800	1.8A	125V/250V
1046-2000	2A	125V/250V
1046-2500	2.5A	125V/250V
1046-3000	3A	125V/250V
1046-3150	3.15A	125V/250V
1046-3500	3.5A	125V/250V
1046-4000	4A	125V/250V
1046-5000	5A	125V/250V
1046-6000	6A	125V/250V
1046-6300	6.3A	125V/250V
1046-7000	7A	125V/250V
1046-8000	8A	125V/250V
1046-10000	10A	125V/250V
1046-12000	12A	125V/250V
1046-15000	15A	125V/250V

Part No.	Rated Carrent	Rated Voltage
1045-0100	100mA	125V/250V
1045-0125	125mA	125V/250V
1045-0150	150mA	125V/250V
1045-0160	160mA	125V/250V
1045-0200	200mA	125V/250V
1045-0250	250mA	125V/250V
1045-0300	300mA	125V/250V
1045-0315	315mA	125V/250V
1045-0350	350mA	125V/250V
1045-0400	400mA	125V/250V
1045-0500	500mA	125V/250V
1045-0600	600mA	125V/250V
1045-0700	700mA	125V/250V
1045-0750	750mA	125V/250V
1045-0800	800mA	125V/250V
1045-1000	1A	125V/250V
1045-1200	1.2A	125V/250V
1045-1250	1.25A	125V/250V
1045-1500	1.5A	125V/250V
1045-1600	1.6A	125V/250V
1045-1800	1.8A	125V/250V
1045-2000	2A	125V/250V
1045-2500	2.5A	125V/250V
1045-3000	3A	125V/250V
1045-3150	3.15A	125V/250V
1045-3500	3.5A	125V/250V
1045-4000	4A	125V/250V
1045-5000	5A	125V/250V
1045-6000	6A	125V/250V
1045-6300	6.3A	125V/250V
1045-7000	7A	125V/250V
1045-8000	8A	125V/250V
1045-10000	10A	125V/250V
1045-12000	12A	125V/250V
1045-15000	15A	125V/250V

ORDER INFORMATION

Product NO.: KLS5-1045-XXXX

- KLS5 — Part Number
- 1045 — Lead Type: 1045=With Lead 1046=No Lead
- XXXX — Rated Carrent

Φ6.35x32(30) Glass Tube Fuse Series

KLS5-1047/1048 Φ6.35x32 Glass Tube Fuse (Fast Blow) Series

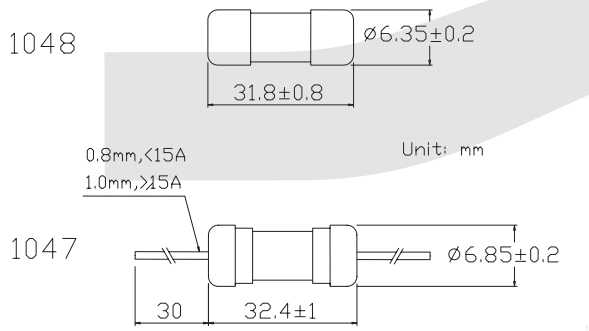

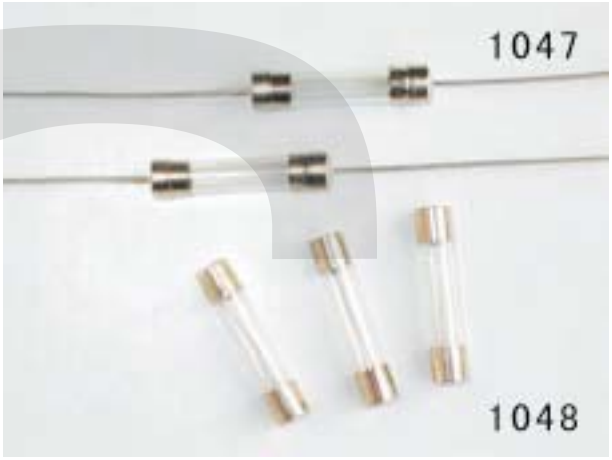

ELECTRICAL CHARACTERISTICS

Rating	Blowing TIME
100%	4 hour Min
135%	1 hour Max
200%	5 sec Max

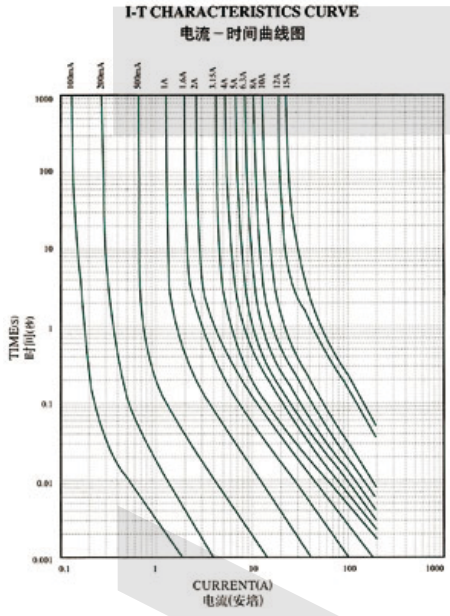

Product Model	Rated Carrent	Rated Volta
1048-0100	100mA	125V/250V
1048-0125	125mA	125V/250V
1048-0150	150mA	125V/250V
1048-0160	160mA	125V/250V
1048-0200	200mA	125V/250V
1048-0250	250mA	125V/250V
1048-0300	300mA	125V/250V
1048-0315	315mA	125V/250V
1048-0350	350mA	125V/250V
1048-0400	40mA	125V/250V
1048-0500	500mA	125V/250V
1048-0600	600mA	125V/250V
1048-0700	700mA	125V/250V
1048-0750	750mA	125V/250V
1048-0800	800mA	125V/250V
1048-1000	1A	125V/250V
1048-1200	1. 2	125V/250V
1048-1250	1. 25A	125V/250V
1048-1500	1. 5A	125V/250V
1048-1600	1. 6A	125V/250V
1048-1800	1. 8A	125V/250V
1048-2000	2A	125V/250V
1048-2500	2. 5A	125V/250V
1048-3000	3A	125V/250V
1048-3150	3. 15A	125V/250V
1048-3500	3. 5	125V/250V
1048-4000	4A	125V/250V
1048-5000	5A	125V/250V
1048-6000	6A	125V/250V
1048-6300	6. 3A	125V/250V
1048-7000	7A	125V/250V
1048-8000	8A	125V/250V
1048-10000	10A	125V/250V
1048-12000	12A	125V/250V
1048-15000	15A	125V/250V
1048-20000	20A	125V/250V
1048-25000	25A	125V/250V
1048-30000	30A	125V/250V

Product Model	Rated Carrent	Rated Volta
1047-0100	100mA	125V/250V
1047-0125	125mA	125V/250V
1047-0150	150mA	125V/250V
1047-0160	160mA	125V/250V
1047-0200	200mA	125V/250V
1047-0250	250mA	125V/250V
1047-0300	300mA	125V/250V
1047-0315	315mA	125V/250V
1047-0350	350mA	125V/250V
1047-0400	40mA	125V/250V
1047-0500	500mA	125V/250V
1047-0600	600mA	125V/250V
1047-0700	700mA	125V/250V
1047-0750	750mA	125V/250V
1047-0800	800mA	125V/250V
1047-1000	1A	125V/250V
1047-1200	1. 2	125V/250V
1047-1250	1. 25A	125V/250V
1047-1500	1. 5A	125V/250V
1047-1600	1. 6A	125V/250V
1047-1800	1. 8A	125V/250V
1047-2000	2A	125V/250V
1047-2500	2. 5A	125V/250V
1047-3000	3A	125V/250V
1047-3150	3. 15A	125V/250V
1047-3500	3. 5	125V/250V
1047-4000	4A	125V/250V
1047-5000	5A	125V/250V
1047-6000	6A	125V/250V
1047-6300	6. 3A	125V/250V
1047-7000	7A	125V/250V
1047-8000	8A	125V/250V
1047-10000	10A	125V/250V
1047-12000	12A	125V/250V
1047-15000	15A	125V/250V
1047-20000	20A	125V/250V
1047-25000	25A	125V/250V
1047-30000	30A	125V/250V

ORDER INFORMATION

Product NO.: KLS5-1047-XXXX

- XXXX — Rated Carrent
- 1047 — Lead Type: 1047=With Lead 1048=No Lead
- KLS5 — Part Number

Φ6.35x32(30) Glass Tube Fuse Series

KLS5-1049/1050 Φ6.35x32 Glass Tube Fuse (Slow Blow) Series

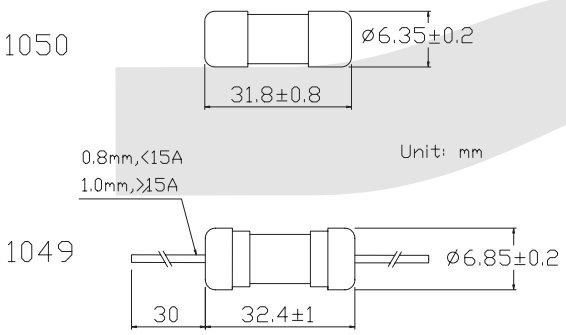

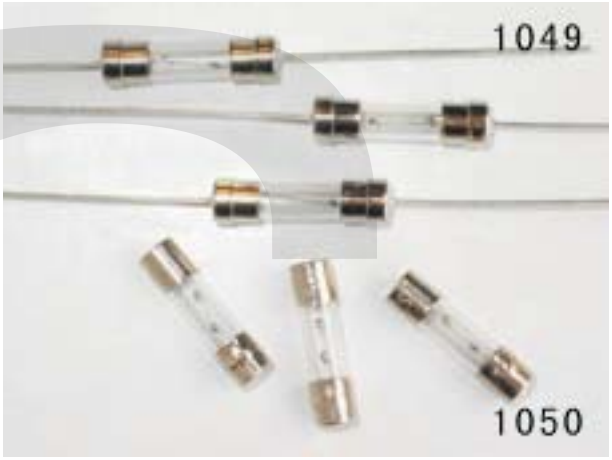

ELECTRICAL CHARACTERISTICS

Rating	Blowing TIME
100%	4 hour Min
135%	1 hour Max
200%	5 sec Max

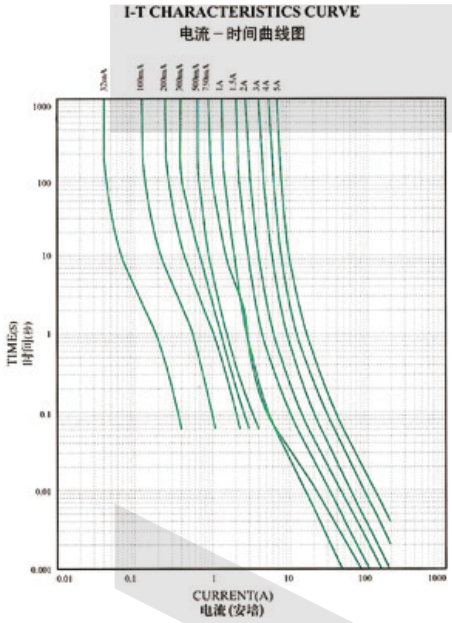

Product Model	Rated Carrent	Rated Volta
1050-0100	100mA	125V/250V
1050-0125	125mA	125V/250V
1050-0150	150mA	125V/250V
1050-0160	160mA	125V/250V
1050-0200	200mA	125V/250V
1050-0250	250mA	125V/250V
1050-0300	300mA	125V/250V
1050-0315	315mA	125V/250V
1050-0350	350mA	125V/250V
1050-0400	40mA	125V/250V
1050-0500	500mA	125V/250V
1050-0600	600mA	125V/250V
1050-0700	700mA	125V/250V
1050-0750	750mA	125V/250V
1050-0800	800mA	125V/250V
1050-1000	1A	125V/250V
1050-1200	1.2	125V/250V
1050-1250	1.25A	125V/250V
1050-1500	1.5A	125V/250V
1050-1600	1.6A	125V/250V
1050-1800	1.8A	125V/250V
1050-2000	2A	125V/250V
1050-2500	2.5A	125V/250V
1050-3000	3A	125V/250V
1050-3150	3.15A	125V/250V
1050-3500	3.5	125V/250V
1050-4000	4A	125V/250V
1050-5000	5A	125V/250V
1050-6000	6A	125V/250V
1050-6300	6.3A	125V/250V
1050-7000	7A	125V/250V
1050-8000	8A	125V/250V
1050-10000	10A	125V/250V
1050-12000	12A	125V/250V
1050-15000	15A	125V/250V
1050-20000	20A	125V/250V
1050-25000	25A	125V/250V
1050-30000	30A	125V/250V

Product Model	Rated Carrent	Rated Volta
1049-0100	100mA	125V/250V
1049-0125	125mA	125V/250V
1049-0150	150mA	125V/250V
1049-0160	160mA	125V/250V
1049-0200	200mA	125V/250V
1049-0250	250mA	125V/250V
1049-0300	300mA	125V/250V
1049-0315	315mA	125V/250V
1049-0350	350mA	125V/250V
1049-0400	40mA	125V/250V
1049-0500	500mA	125V/250V
1049-0600	600mA	125V/250V
1049-0700	700mA	125V/250V
1049-0750	750mA	125V/250V
1049-0800	800mA	125V/250V
1049-1000	1A	125V/250V
1049-1200	1.2	125V/250V
1049-1250	1.25A	125V/250V
1049-1500	1.5A	125V/250V
1049-1600	1.6A	125V/250V
1049-1800	1.8A	125V/250V
1049-2000	2A	125V/250V
1049-2500	2.5A	125V/250V
1049-3000	3A	125V/250V
1049-3150	3.15A	125V/250V
1049-3500	3.5	125V/250V
1049-4000	4A	125V/250V
1049-5000	5A	125V/250V
1049-6000	6A	125V/250V
1049-6300	6.3A	125V/250V
1049-7000	7A	125V/250V
1049-8000	8A	125V/250V
1049-10000	10A	125V/250V
1049-12000	12A	125V/250V
1049-15000	15A	125V/250V
1049-20000	20A	125V/250V
1049-25000	25A	125V/250V
1049-30000	30A	125V/250V

ORDER INFORMATION

Product NO.: KLS5-1049-XXXX

- Rated Carrent
- Lead Type:1049=With Lead 1050=No Lead
- Part Number

V

Φ6.35x32(30) Glass Tube Fuse Series

KLS5-1051/1052 Φ6.35x32(30) Glass Tube Fuse (Medium Slow Blow) Series

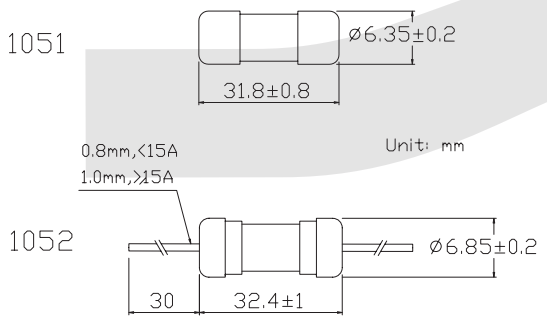

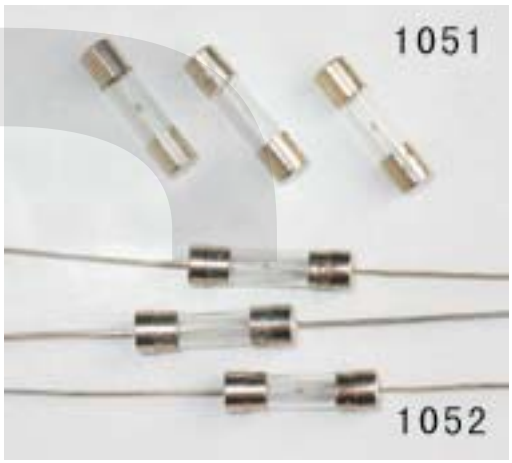

ELECTRICAL CHARACTERISTICS

Rating	2.1 In	2.75 In		4 In		10 In	
	Max	Min	Max	Min	Max	Min	Max
100mA~10A	2 min	200ms	10s	40ms	3s	10ms	300ms

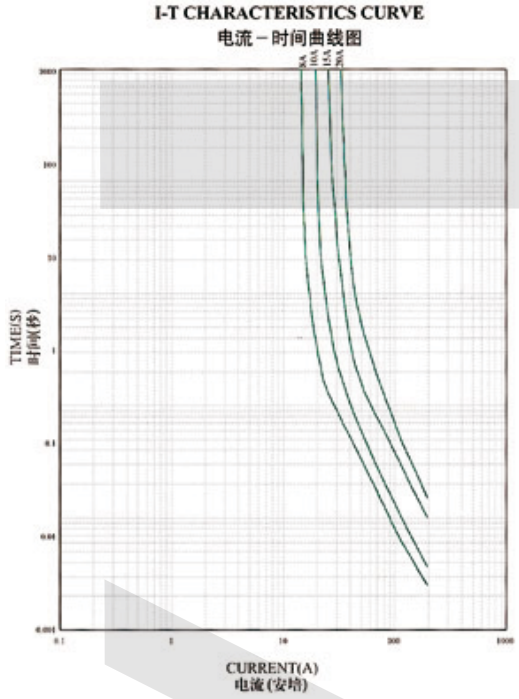

Product Model	Rated Carrent	Rated Volta
1051-0100	100mA	125V/250V
1051-0125	125mA	125V/250V
1051-0150	150mA	125V/250V
1051-0160	160mA	125V/250V
1051-0200	200mA	125V/250V
1051-0250	250mA	125V/250V
1051-0300	300mA	125V/250V
1051-0315	315mA	125V/250V
1051-0350	350mA	125V/250V
1051-0400	40mA	125V/250V
1051-0500	500mA	125V/250V
1051-0600	600mA	125V/250V
1051-0700	700mA	125V/250V
1051-0750	750mA	125V/250V
1051-0800	800mA	125V/250V
1051-1000	1A	125V/250V
1051-1200	1.2	125V/250V
1051-1250	1.25A	125V/250V
1051-1500	1.5A	125V/250V
1051-1600	1.6A	125V/250V
1051-1800	1.8A	125V/250V
1051-2000	2A	125V/250V
1051-2500	2.5A	125V/250V
1051-3000	3A	125V/250V
1051-3150	3.15A	125V/250V
1051-3500	3.5	125V/250V
1051-4000	4A	125V/250V
1051-5000	5A	125V/250V
1051-6000	6A	125V/250V
1051-6300	6.3A	125V/250V
1051-7000	7A	125V/250V
1051-8000	8A	125V/250V
1051-10000	10A	125V/250V
1051-12000	12A	125V/250V
1051-15000	15A	125V/250V
1051-20000	20A	125V/250V
1051-25000	25A	125V/250V
1051-30000	30A	125V/250V

Product Model	Rated Carrent	Rated Volta
1052-0100	100mA	125V/250V
1052-0125	125mA	125V/250V
1052-0150	150mA	125V/250V
1052-0160	160mA	125V/250V
1052-0200	200mA	125V/250V
1052-0250	250mA	125V/250V
1052-0300	300mA	125V/250V
1052-0315	315mA	125V/250V
1052-0350	350mA	125V/250V
1052-0400	40mA	125V/250V
1052-0500	500mA	125V/250V
1052-0600	600mA	125V/250V
1052-0700	700mA	125V/250V
1052-0750	750mA	125V/250V
1052-0800	800mA	125V/250V
1052-1000	1A	125V/250V
1052-1200	1.2	125V/250V
1052-1250	1.25A	125V/250V
1052-1500	1.5A	125V/250V
1052-1600	1.6A	125V/250V
1052-1800	1.8A	125V/250V
1052-2000	2A	125V/250V
1052-2500	2.5A	125V/250V
1052-3000	3A	125V/250V
1052-3150	3.15A	125V/250V
1052-3500	3.5	125V/250V
1052-4000	4A	125V/250V
1052-5000	5A	125V/250V
1052-6000	6A	125V/250V
1052-6300	6.3A	125V/250V
1052-7000	7A	125V/250V
1052-8000	8A	125V/250V
1052-10000	10A	125V/250V
1052-12000	12A	125V/250V
1052-15000	15A	125V/250V
1052-20000	20A	125V/250V
1052-25000	25A	125V/250V
1052-30000	30A	125V/250V

ORDER INFORMATION

Product NO.: KLS5-1051-XXXX

- Rated Carrent
- Lead Type:1051=No Lead 1052=With Lead
- Part Number

Φ6.35x32(30) Glass Tube Fuse Series

KLS5-1053/1054 Φ6.35x32(30) Glass Tube Fuse (Slow Blow) Series

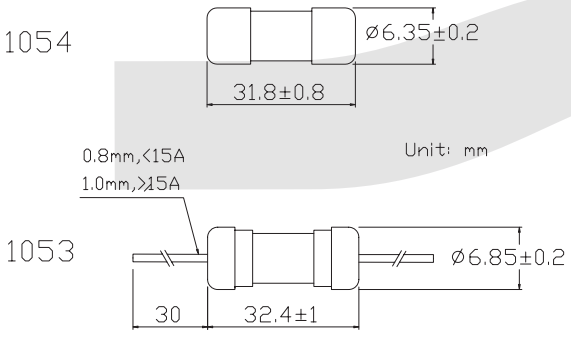

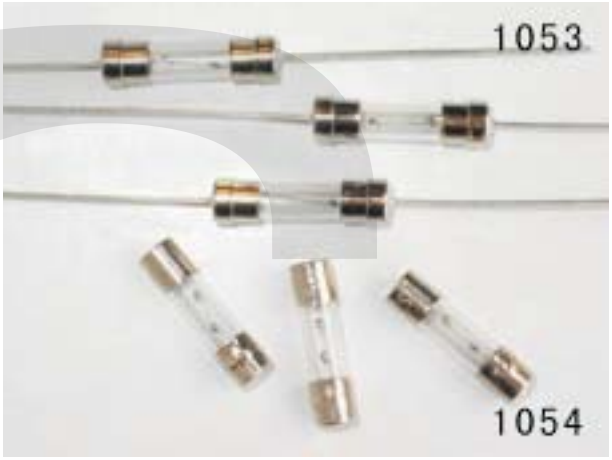

ELECTRICAL CHARACTERISTICS

Rating	Blowing TIME
100%	4 hour Min
135%	1 hour Max
200%	120 sec Max

I-T CHARACTERISTICS CURVE
电流－时间曲线图

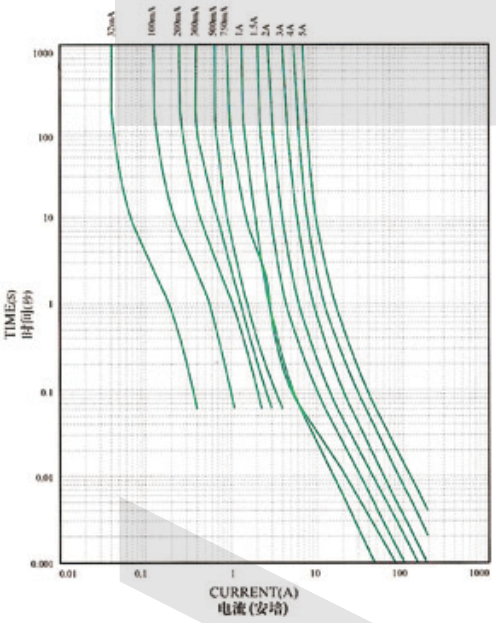

Product Model	Rated Carrent	Rated Volta
1054-0100	100mA	125V/250V
1054-0125	125mA	125V/250V
1054-0150	150mA	125V/250V
1054-0160	160mA	125V/250V
1054-0200	200mA	125V/250V
1054-0250	250mA	125V/250V
1054-0300	300mA	125V/250V
1054-0315	315mA	125V/250V
1054-0350	350mA	125V/250V
1054-0400	40mA	125V/250V
1054-0500	500mA	125V/250V
1054-0600	600mA	125V/250V
1054-0700	700mA	125V/250V
1054-0750	750mA	125V/250V
1054-0800	800mA	125V/250V
1054-1000	1A	125V/250V
1054-1200	1.2	125V/250V
1054-1250	1.25A	125V/250V
1054-1500	1.5A	125V/250V
1054-1600	1.6A	125V/250V
1054-1800	1.8A	125V/250V
1054-2000	2A	125V/250V
1054-2500	2.5A	125V/250V
1054-3000	3A	125V/250V
1054-3150	3.15A	125V/250V
1054-3500	3.5	125V/250V
1054-4000	4A	125V/250V
1054-5000	5A	125V/250V
1054-6000	6A	125V/250V
1054-6300	6.3A	125V/250V
1054-7000	7A	125V/250V
1054-8000	8A	125V/250V
1054-10000	10A	125V/250V
1054-12000	12A	125V/250V
1054-15000	15A	125V/250V
1054-20000	20A	125V/250V
1054-25000	25A	125V/250V
1054-30000	30A	125V/250V

Product Model	Rated Carrent	Rated Volta
1053-0100	100mA	125V/250V
1053-0125	125mA	125V/250V
1053-0150	150mA	125V/250V
1053-0160	160mA	125V/250V
1053-0200	200mA	125V/250V
1053-0250	250mA	125V/250V
1053-0300	300mA	125V/250V
1053-0315	315mA	125V/250V
1053-0350	350mA	125V/250V
1053-0400	40mA	125V/250V
1053-0500	500mA	125V/250V
1053-0600	600mA	125V/250V
1053-0700	700mA	125V/250V
1053-0750	750mA	125V/250V
1053-0800	800mA	125V/250V
1053-1000	1A	125V/250V
1053-1200	1.2	125V/250V
1053-1250	1.25A	125V/250V
1053-1500	1.5A	125V/250V
1053-1600	1.6A	125V/250V
1053-1800	1.8A	125V/250V
1053-2000	2A	125V/250V
1053-2500	2.5A	125V/250V
1053-3000	3A	125V/250V
1053-3150	3.15A	125V/250V
1053-3500	3.5	125V/250V
1053-4000	4A	125V/250V
1053-5000	5A	125V/250V
1053-6000	6A	125V/250V
1053-6300	6.3A	125V/250V
1053-7000	7A	125V/250V
1053-8000	8A	125V/250V
1053-10000	10A	125V/250V
1053-12000	12A	125V/250V
1053-15000	15A	125V/250V
1053-20000	20A	125V/250V
1053-25000	25A	125V/250V
1053-30000	30A	125V/250V

ORDER INFORMATION

Product NO.: KLS5-1053-XXXX

- Rated Carrent
- Lead Type:1053=With Lead 1054=No Lead
- Part Number

Φ6.35x32(30) Ceramic Tube Fuse Series

KLS5-1055/1056 Φ6.35x32(30) Ceramic Tube Fuse (Fast Blow) Series

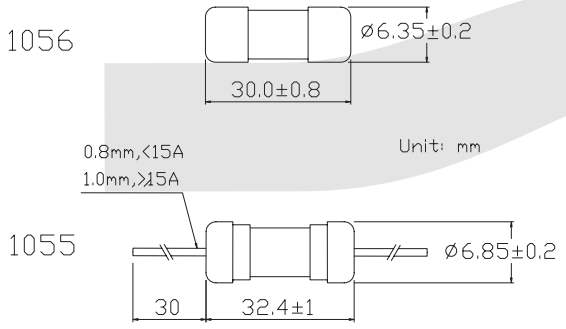

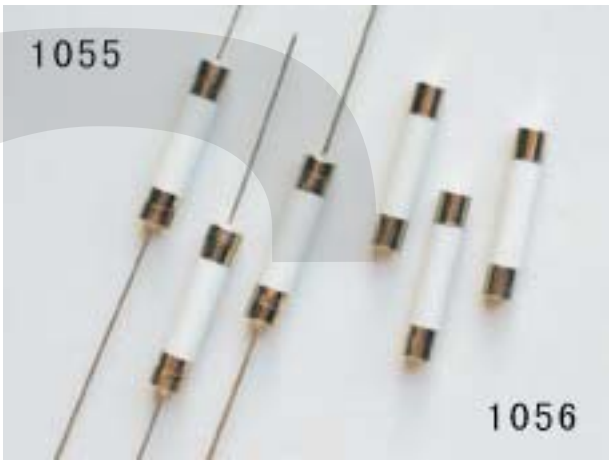

ELECTRICAL CHARACTERISTICS

Rating	Blowing TIME
100%	4 hour Min
135%	1 hour Max
200%	120 sec Max

I-T CHARACTERISTICS CURVE
电流－时间曲线图

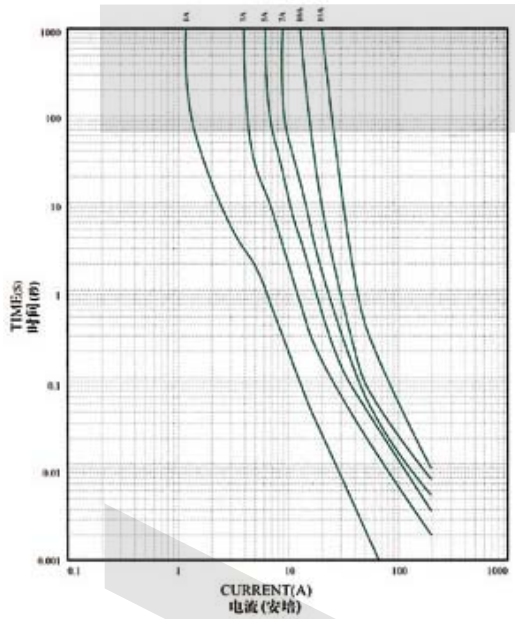

Product Model	Rated Carrent	Rated Volta
1056-0100	100mA	125V/250V
1056-0125	125mA	125V/250V
1056-0150	150mA	125V/250V
1056-0160	160mA	125V/250V
1056-0200	200mA	125V/250V
1056-0250	250mA	125V/250V
1056-0300	300mA	125V/250V
1056-0315	315mA	125V/250V
1056-0350	350mA	125V/250V
1056-0400	40mA	125V/250V
1056-0500	500mA	125V/250V
1056-0600	600mA	125V/250V
1056-0700	700mA	125V/250V
1056-0750	750mA	125V/250V
1056-0800	800mA	125V/250V
1056-1000	1A	125V/250V
1056-1200	1.2	125V/250V
1056-1250	1.25A	125V/250V
1056-1500	1.5A	125V/250V
1056-1600	1.6A	125V/250V
1056-1800	1.8A	125V/250V
1056-2000	2A	125V/250V
1056-2500	2.5A	125V/250V
1056-3000	3A	125V/250V
1056-3150	3.15A	125V/250V
1056-3500	3.5	125V/250V
1056-4000	4A	125V/250V
1056-5000	5A	125V/250V
1056-6000	6A	125V/250V
1056-6300	6.3A	125V/250V
1056-7000	7A	125V/250V
1056-8000	8A	125V/250V
1056-10000	10A	125V/250V
1056-12000	12A	125V/250V
1056-15000	15A	125V/250V
1056-20000	20A	125V/250V
1056-25000	25A	125V/250V
1056-30000	30A	125V/250V

Product Model	Rated Carrent	Rated Volta
1055-0100	100mA	125V/250V
1055-0125	125mA	125V/250V
1055-0150	150mA	125V/250V
1055-0160	160mA	125V/250V
1055-0200	200mA	125V/250V
1055-0250	250mA	125V/250V
1055-0300	300mA	125V/250V
1055-0315	315mA	125V/250V
1055-0350	350mA	125V/250V
1055-0400	40mA	125V/250V
1055-0500	500mA	125V/250V
1055-0600	600mA	125V/250V
1055-0700	700mA	125V/250V
1055-0750	750mA	125V/250V
1055-0800	800mA	125V/250V
1055-1000	1A	125V/250V
1055-1200	1.2	125V/250V
1055-1250	1.25A	125V/250V
1055-1500	1.5A	125V/250V
1055-1600	1.6A	125V/250V
1055-1800	1.8A	125V/250V
1055-2000	2A	125V/250V
1055-2500	2.5A	125V/250V
1055-3000	3A	125V/250V
1055-3150	3.15A	125V/250V
1055-3500	3.5	125V/250V
1055-4000	4A	125V/250V
1055-5000	5A	125V/250V
1055-6000	6A	125V/250V
1055-6300	6.3A	125V/250V
1055-7000	7A	125V/250V
1055-8000	8A	125V/250V
1055-10000	10A	125V/250V
1055-12000	12A	125V/250V
1055-15000	15A	125V/250V
1055-20000	20A	125V/250V
1055-25000	25A	125V/250V
1055-30000	30A	125V/250V

ORDER INFORMATION

Product NO.: KLS5-1055-XXXX

- XXXX — Rated Carrent
- 1055 — Lead Type: 1055=With Lead, 1056=No Lead
- KLS5 — Part Number

Φ6.35x32(30) Ceramic Tube Fuse Series

KLS5-1057/1058 Φ6.35x32(30) Ceramic Tube Fuse (Slow Blow) Series

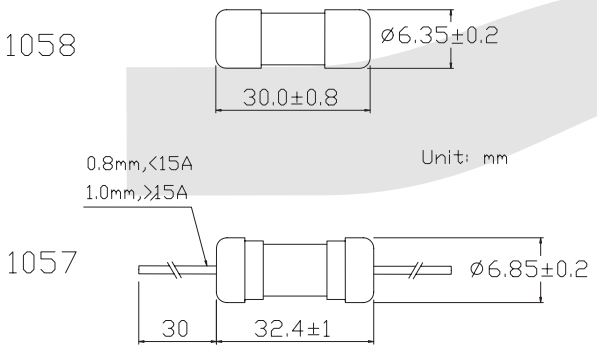

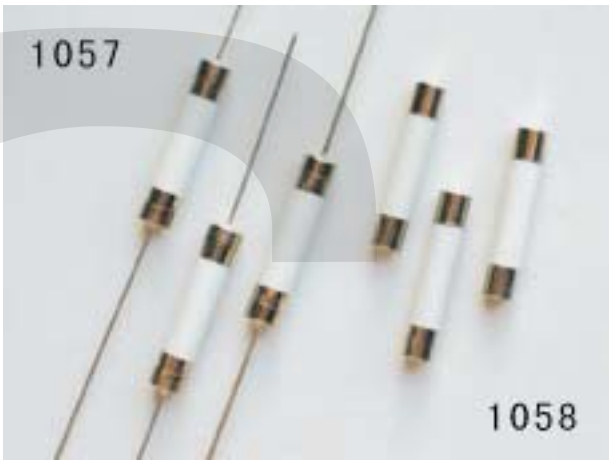

ELECTRICAL CHARACTERISTICS

Rating	Blowing TIME
100%	4 hour Min
135%	1 hour Max
200%	5s ~ 120s

I-T CHARACTERISTICS CURVE
电流－时间曲线图

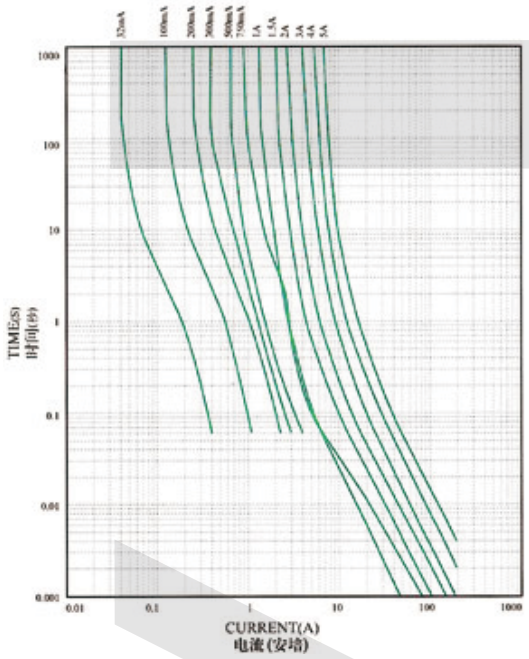

Product Model	Rated Carrent	Rated Volta
1058-0100	100mA	125V/250V
1058-0125	125mA	125V/250V
1058-0150	150mA	125V/250V
1058-0160	160mA	125V/250V
1058-0200	200mA	125V/250V
1058-0250	250mA	125V/250V
1058-0300	300mA	125V/250V
1058-0315	315mA	125V/250V
1058-0350	350mA	125V/250V
1058-0400	40mA	125V/250V
1058-0500	500mA	125V/250V
1058-0600	600mA	125V/250V
1058-0700	700mA	125V/250V
1058-0750	750mA	125V/250V
1058-0800	800mA	125V/250V
1058-1000	1A	125V/250V
1058-1200	1.2	125V/250V
1058-1250	1.25A	125V/250V
1058-1500	1.5A	125V/250V
1058-1600	1.6A	125V/250V
1058-1800	1.8A	125V/250V
1058-2000	2A	125V/250V
1058-2500	2.5A	125V/250V
1058-3000	3A	125V/250V
1058-3150	3.15A	125V/250V
1058-3500	3.5	125V/250V
1058-4000	4A	125V/250V
1058-5000	5A	125V/250V
1058-6000	6A	125V/250V
1058-6300	6.3A	125V/250V
1058-7000	7A	125V/250V
1058-8000	8A	125V/250V
1058-10000	10A	125V/250V
1058-12000	12A	125V/250V
1058-15000	15A	125V/250V
1058-20000	20A	125V/250V
1058-25000	25A	125V/250V
1058-30000	30A	125V/250V

Product Model	Rated Carrent	Rated Volta
1057-0100	100mA	125V/250V
1057-0125	125mA	125V/250V
1057-0150	150mA	125V/250V
1057-0160	160mA	125V/250V
1057-0200	200mA	125V/250V
1057-0250	250mA	125V/250V
1057-0300	300mA	125V/250V
1057-0315	315mA	125V/250V
1057-0350	350mA	125V/250V
1057-0400	40mA	125V/250V
1057-0500	500mA	125V/250V
1057-0600	600mA	125V/250V
1057-0700	700mA	125V/250V
1057-0750	750mA	125V/250V
1057-0800	800mA	125V/250V
1057-1000	1A	125V/250V
1057-1200	1.2	125V/250V
1057-1250	1.25A	125V/250V
1057-1500	1.5A	125V/250V
1057-1600	1.6A	125V/250V
1057-1800	1.8A	125V/250V
1057-2000	2A	125V/250V
1057-2500	2.5A	125V/250V
1057-3000	3A	125V/250V
1057-3150	3.15A	125V/250V
1057-3500	3.5	125V/250V
1057-4000	4A	125V/250V
1057-5000	5A	125V/250V
1057-6000	6A	125V/250V
1057-6300	6.3A	125V/250V
1057-7000	7A	125V/250V
1057-8000	8A	125V/250V
1057-10000	10A	125V/250V
1057-12000	12A	125V/250V
1057-15000	15A	125V/250V
1057-20000	20A	125V/250V
1057-25000	25A	125V/250V
1057-30000	30A	125V/250V

ORDER INFORMATION

Product NO.: KLS5-1057-XXXX

- Rated Carrent
- Lead Type:1057=With Lead 1058=No Lead
- Part Number

Φ6.35x25 Glass Tube Fuse Series

KLS5-1063/1064 Φ6.35x25 Glass Tube Fuse (Fast Blow) Series

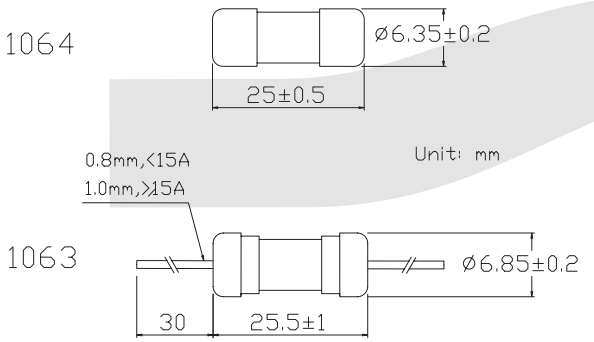

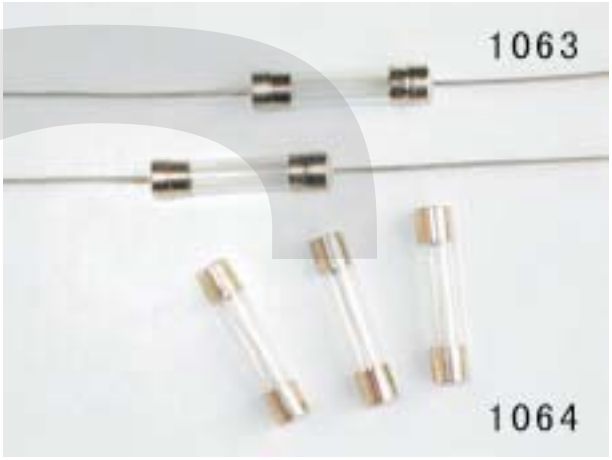

ELECTRICAL CHARACTERISTICS

Rating	2.1 In	2.75 In		4 In		10 In
	Max	Min	Max	Min	Max	Max
≥50mA~100mA	20s	20ms	200ms	1ms	30ms	5ms
>100mA~10A	20s	20ms	1500ms	8ms	400ms	80ms

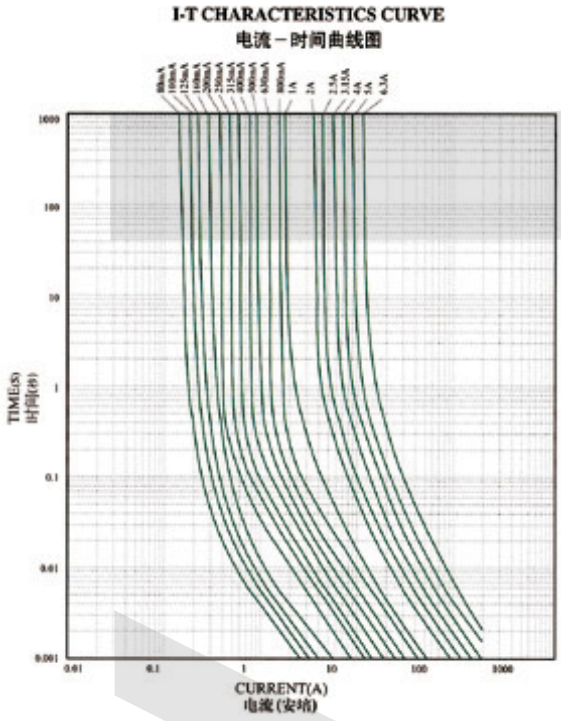

Product Model	Rated Carrent	Rated Volta
1064-0100	100mA	125V/250V
1064-0125	125mA	125V/250V
1064-0150	150mA	125V/250V
1064-0160	160mA	125V/250V
1064-0200	200mA	125V/250V
1064-0250	250mA	125V/250V
1064-0300	300mA	125V/250V
1064-0315	315mA	125V/250V
1064-0350	350mA	125V/250V
1064-0400	40mA	125V/250V
1064-0500	500mA	125V/250V
1064-0600	600mA	125V/250V
1064-0700	700mA	125V/250V
1064-0750	750mA	125V/250V
1064-0800	800mA	125V/250V
1064-1000	1A	125V/250V
1064-1200	1.2	125V/250V
1064-1250	1.25A	125V/250V
1064-1500	1.5A	125V/250V
1064-1600	1.6A	125V/250V
1064-1800	1.8A	125V/250V
1064-2000	2A	125V/250V
1064-2500	2.5A	125V/250V
1064-3000	3A	125V/250V
1064-3150	3.15A	125V/250V
1064-3500	3.5	125V/250V
1064-4000	4A	125V/250V
1064-5000	5A	125V/250V
1064-6000	6A	125V/250V
1064-6300	6.3A	125V/250V
1064-7000	7A	125V/250V
1064-8000	8A	125V/250V
1064-10000	10A	125V/250V
1064-12000	12A	125V/250V
1064-15000	15A	125V/250V
1064-20000	20A	125V/250V
1064-25000	25A	125V/250V
1064-30000	30A	125V/250V

Product Model	Rated Carrent	Rated Volta
1063-0100	100mA	125V/250V
1063-0125	125mA	125V/250V
1063-0150	150mA	125V/250V
1063-0160	160mA	125V/250V
1063-0200	200mA	125V/250V
1063-0250	250mA	125V/250V
1063-0300	300mA	125V/250V
1063-0315	315mA	125V/250V
1063-0350	350mA	125V/250V
1063-0400	40mA	125V/250V
1063-0500	500mA	125V/250V
1063-0600	600mA	125V/250V
1063-0700	700mA	125V/250V
1063-0750	750mA	125V/250V
1063-0800	800mA	125V/250V
1063-1000	1A	125V/250V
1063-1200	1.2	125V/250V
1063-1250	1.25A	125V/250V
1063-1500	1.5A	125V/250V
1063-1600	1.6A	125V/250V
1063-1800	1.8A	125V/250V
1063-2000	2A	125V/250V
1063-2500	2.5A	125V/250V
1063-3000	3A	125V/250V
1063-3150	3.15A	125V/250V
1063-3500	3.5	125V/250V
1063-4000	4A	125V/250V
1063-5000	5A	125V/250V
1063-6000	6A	125V/250V
1063-6300	6.3A	125V/250V
1063-7000	7A	125V/250V
1063-8000	8A	125V/250V
1063-10000	10A	125V/250V
1063-12000	12A	125V/250V
1063-15000	15A	125V/250V
1063-20000	20A	125V/250V
1063-25000	25A	125V/250V
1063-30000	30A	125V/250V

ORDER INFORMATION

Product NO.: KLS5-1063-XXXX

- Rated Carrent
- Lead Type:1063=With Lead 1064=No Lead
- Part Number

KLS ELECTRONIC CO;LTD

Engineering Product Specification

SMD FUSE 0603 FAST ACTING



Table of Contents

Section	Title	Page
1.	Scope	3
2.	General	3
3.	Manufacturer and Production Facility	3
4.	Agency / Certificate Information	3
5.	Catalog Symbol	4
6.	Ordering Information	4
7.	Shape & Dimensions	5
8.	Recommended Land Patterns	6
9.	Materials	6
10.	Time Current Curve	6
11.	I^2T vs Time Curve	8
12.	Temperature Derating Curve	9
13.	Reliability Test	10
14.	Recommended Solder Curve	11
15.	Packaging	12
16.	Storage	13
17.	Application	13

1. Scope

This Specification applies to F0603 series SMD fuses.

2. General

- Fast acting
- 1.6mm×0.8mm physical size
- Thick film manufacturing method,ceramic substrate, silver fusing element
- Higher temperature profiles
- Excellent environmental integrity
- RoHS compliant
- Halogen-free

3. Manufacturer and Production Facility

- Manufacturer

  Nanjing Sinochip Technology & development Co., Ltd. Qingma Road 6#
  Maqun Science & Technology Park
  Nanjing City, Jiangsu Province, P. R. China
  Phone: 086-25-52153215
  Fax: 086-25-52157065

4. Agency / Certificate Information

- UL Recognition Card:

  JDYX2.E319540, JDYX8.E319540

- ISO 9001:2000, Certificate Number 10807Q10334ROS

5. Catalog Symbol

Example F0603-1.0A

F 0603-1.0A

① ② ③ ④

①. Symbol of SINOCHIP Electrical Characteristic: F = Fast acting

②. Size Number

③. Ampere Rating: 1A

6. Ordering Information

Part Number	Marking	Current Rating (A)	Voltage Rating (V)	Interrupting Rating 32V DC	Typical Cold DCR* (Ω)	Nominal I^2T** (A^2S)
F0603 -0.5A	F	0.50	32	50A	0.940	0.0067
F0603-0.75A	G	0.75	32	50A	0.448	0.0087
F0603-1.0A	H	1.00	32	50A	0.252	0.0150
F0603-1.5A	K	1.50	32	50A	0.108	0.0365
F0603-2.0A	N	2.00	32	50A	0.058	0.0595
F0603-2.5A	O	2.50	32	50A	0.043	0.1222
F0603-3.0A	P	3.00	32	50A	0.044	0.1350
F0603-3.5A	R	3.50	32	50A	0.032	0.1891
F0603-4.0A	S	4.00	32	35A	0.019	0.3559
F0603-5.0A	T	5.00	32	35A	0.0135	0.7030
F0603-6.0A	6	6.00	32	35A	0.0115	0.8861

* Measured at≤10% rated current and 25℃.

** Melting I^2T at 10 times of rated current.

7. Shape & Dimensions: (mm)



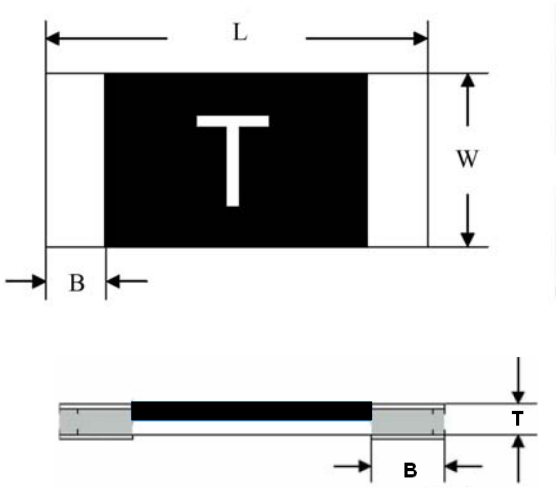

L	W	T	B
1.60±0.15	0.80±0.15	0.40±0.10	0.30±0.10

8. Recommended Land Patterns: (mm)

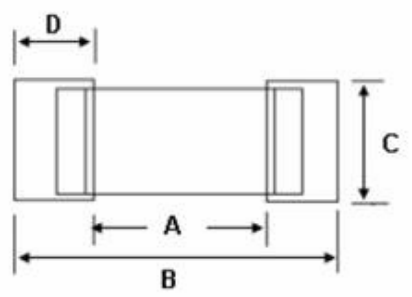

A	B	C	D
1.0±0.2	2.50±0.3	0.8±0.2	1.2±0.3

9. Materials:

	Components	Material
1	Substrate	Ceramic
2	Terminations	Silver over-plated with tin (100%)
3	Element	Silver or Silver / Palladium

10. Time Current Curve:

Electrical Characteristics		
Ampere Rating	**% of Current Rating**	**Opening Time**
500mA-6A	100%	4 Hours Min.
500mA-750mA	200%	60 Seconds Max.
500mA-6A	250%	5 Seconds Max.

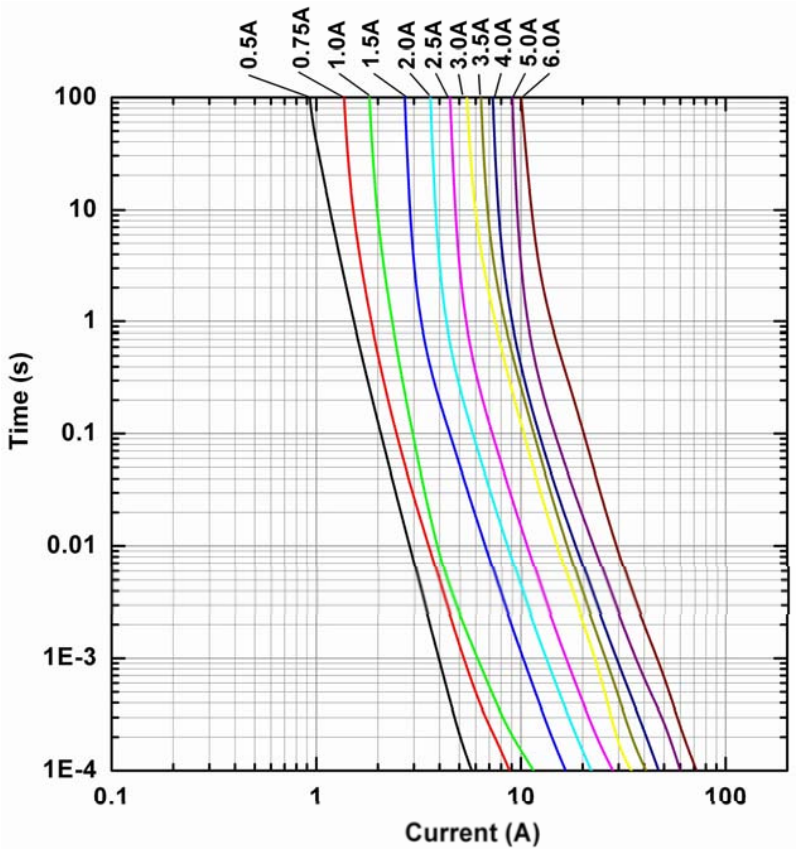

11. I^2T vs Time Curve:

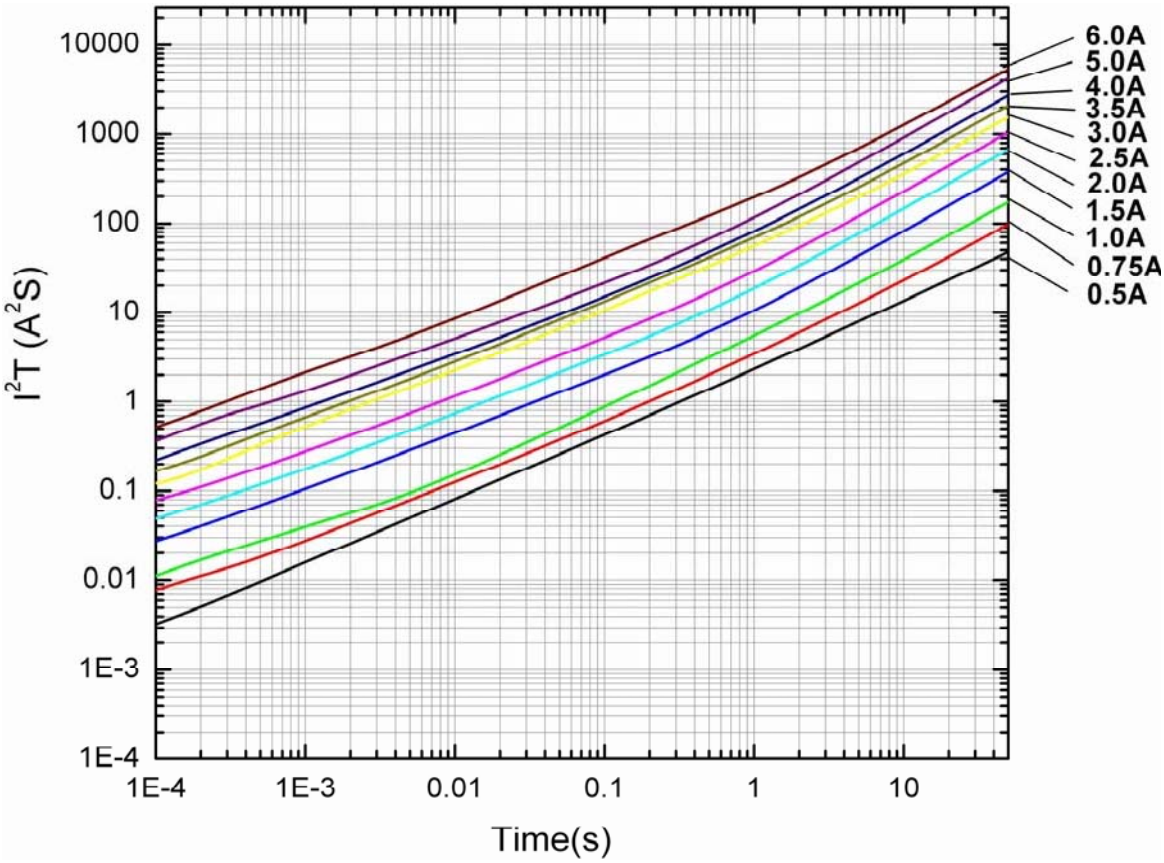

12. Temperature Derating Curve: (Ambient temperature on current-carrying capacity)

- **For Circuit,current rating shall be derated in accordannce with the figure.**
- **This current derating curve is for fusing characterisics.**

Example,

Work Temp:80℃, **Temp derating factor = 90%**

Melting $I^2t_{fuse} \geqslant I^2t_{pulse} / Fp / 0.9$

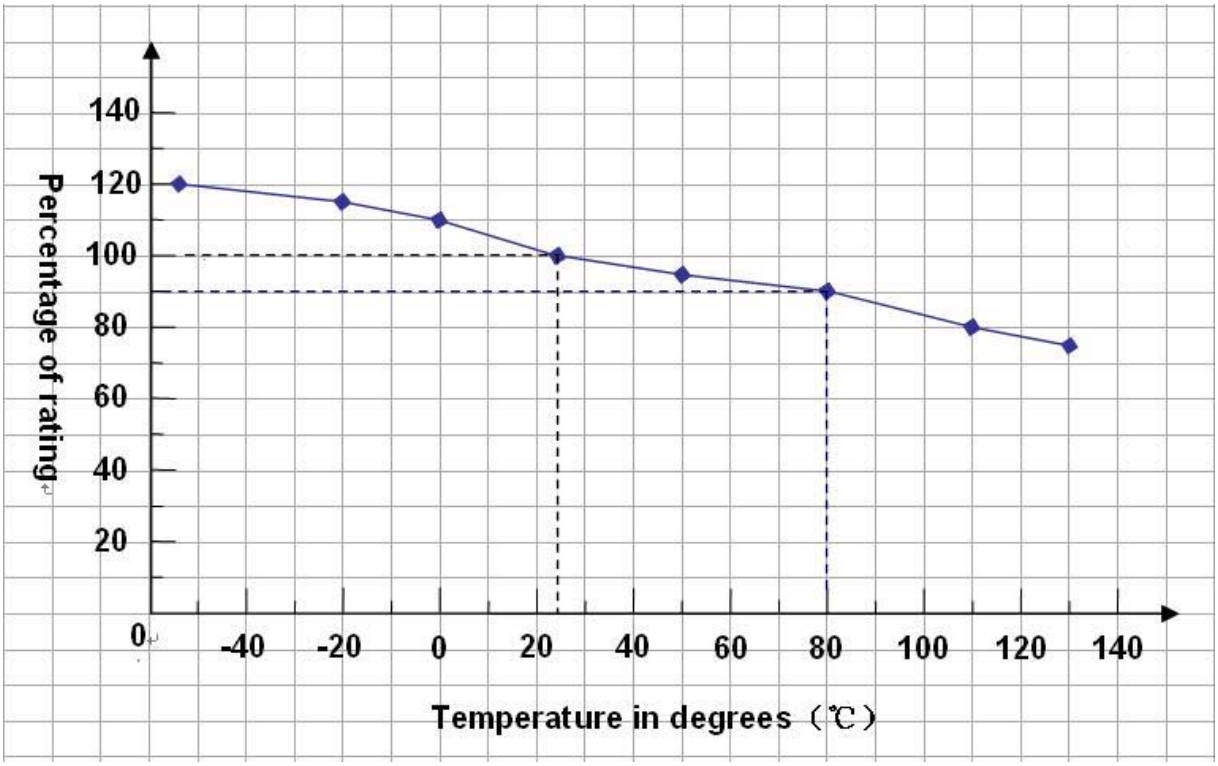

13. Reliability Test:

Characteristics	Test condition / Methods	Requirement	Test Reference
Carrying capacity	100% of its rated current	No Fusing，4hr min	Refer to SINOCHIP File
Fusing Time	200% of its rated current（500~750mA）	Within 60sec	Refer to SINOCHIP File
	250% of its rated current	Within 5sec	Refer to SINOCHIP File
Solderability	235°C±5℃, 3s±0.5s	95% coverage min	IEC60127/A.3.3; IEC60068-2-20; MIL-STD-202 Method 208H
Resistance to soldering	260°C±5℃, 10s±0.5s	△R:<10%	MIL-STD-202 Method 210
Bending test	Distance between holding points：90mm，Bending：1mm，1time，10sec	(1) No mechanical damages (2) △R: <10%	Refer to SINOCHIP File
High Temperature Operating Life	96hours, 125℃ at 60% rated current. Measure cold resistance and Time-Current characteristics.	(1)△R: <10%; (2)100% of Rating Current, Opening time >4 hours (3)200% of Rating Current, Opening time <60 seconds	MIL-STD-202 Method 108
Moisture Resistance	10 Cycles. Measure cold resistance and Time-Current characteristics.	(1)△R: <10%; (2)100% of Rating Current, Opening time >4 hours (3)200% of Rating Current, Opening time <60 seconds	MIL-STD-202 Method 106
High Temperature Exposure	1000 hrs. @ T=125℃. Unpowered. Measure cold resistance. and Time-Current characteristics.	(1)△R: <10%; (2)100% of Rating Current, Opening time >4 hours (3)200% of Rating Current, Opening time <60 seconds	MIL-STD-202 Method 108
Insulation Resistance	DC resistance	0.1MΩ min	IEC60127-4
ON /OFF Cycle Test	Surge current and 100% rated current; 50s ON; 10s OFF; 100,000 Cycles	(1)No open; (2)100% of Rating Current, Opening time >4 hours (3)200% of Rating Current, Opening time <60 seconds	Refer to SINOCHIP File

Salt spray	5% salt solution，48 hours exposure	△R: <10%	MIL-STD-202 Method 101	
Thermal Shock	10 cycles between -55°C/+125°C, 30 minutes @each extreme	No mechanical damage; △R: <10%	IEC 60068-2-14	
Interrupting Ability	Loading current 50A	without permanent arcing,ignition and bursting of fuse link	UL248-14	

14. Recommended Solder Curve:

14.1 Infrared Reflow

14.1.1 Temperature:260℃

14.1.2 Time:30 Seconds Maximum

14.1.3 Recommend Reflow profile

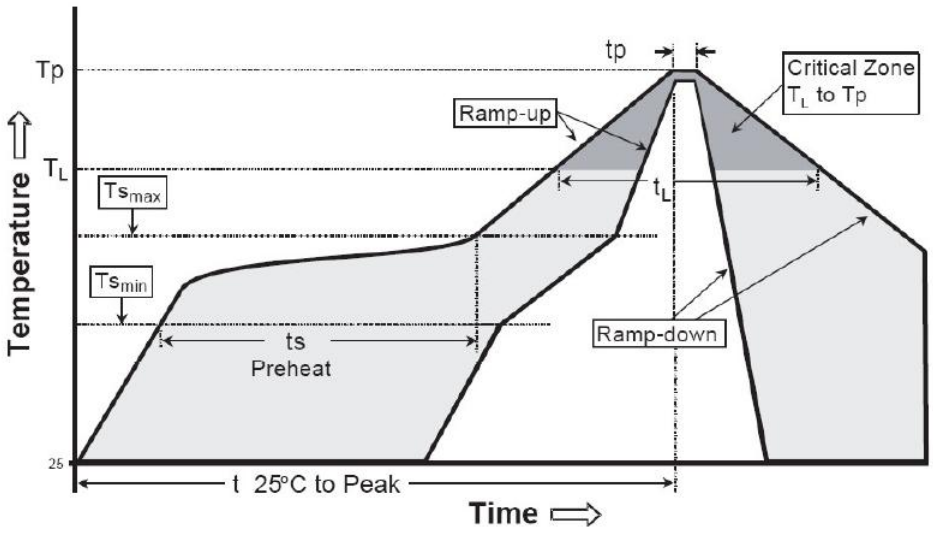

Profile Feature	Pb-Free Assembly
Average Ramp-Up Rate(Ts_{max} to Tp)	3℃/second max.
Preheat Temperature Min(Ts_{min}) Temperature Max(Ts_{max}) Time(Ts_{min} to Ts_{max})	150℃ 200℃ 60-120 seconds
Peak Temperature(Tp)	260℃
Time within 5℃ of actual Peak Temperature(Tp)	20-40 seconds
Ramp-Down Rate	6℃/second max.
Time 25℃ to Peak Temperature	8 minutes max.

14.2 Wave soldering

14.2.1 Reservoir Temperature:260℃

14.2.2 Time in Reservior:10 Seconds Maximum

14.3 Hand Soldering

14.3.1 Temperature:380℃

14.3.2 Time:5 Seconds Maximum

15. Packaging:

• 5,000 pieces of fuses in paper taper and reeled on a 178mm(7 inch) reel.

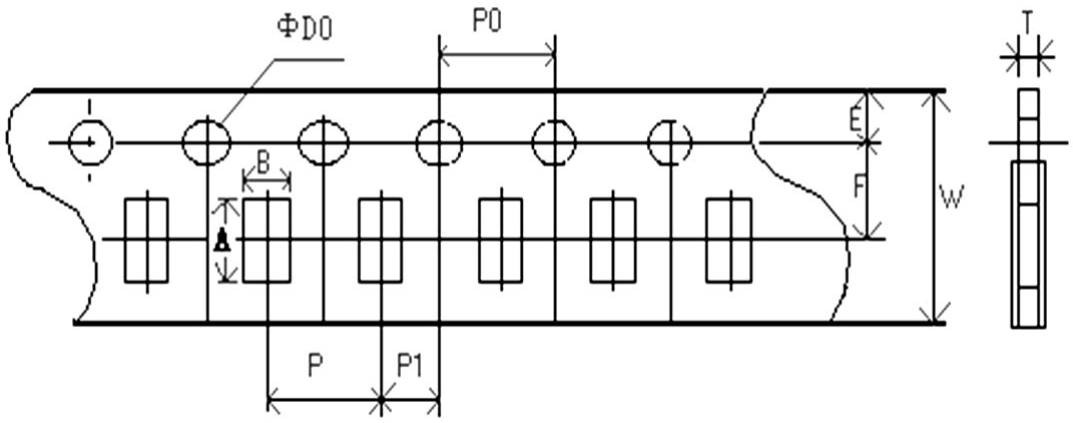

Type	A	B	W	F	E
F0603	1.85±0.10	1.10±0.10	8.00±0.20	3.50±0.05	1.75±0.10
Type	**P**	**P0**	**P1**	**D0**	**T**
F0603	4.00±0.10	4.00±0.10	2.00±0.05	1.50±0.10	0.60±0.10

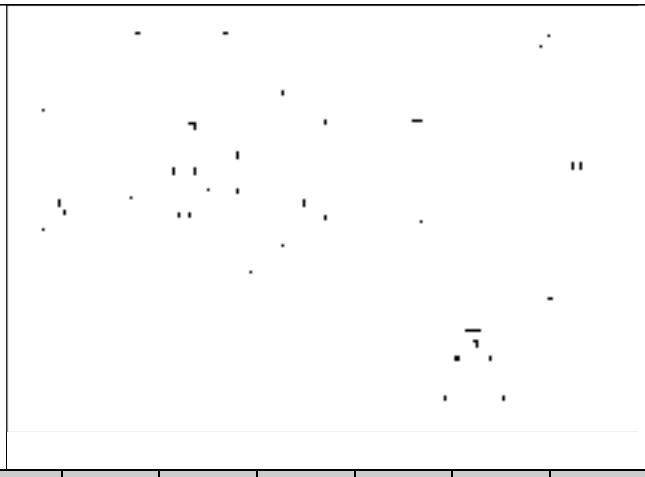

Type	M	W	T	A	B	C	D
F0603	178 ±2.0	10.0 ±1.5	12.0 ±2.0	2.5 ±0.5	13.0 ±0.5	31.0 ±1.0	80.0 ±1.0

16. Storage:

- **The maximum ambient temperature shall not exceed 40℃.Storage temperature higher than 40℃ could result in the deformation of packaging materials.**
- **The maximum relative humidity recommended for storage is 65%.High humidity with high temperature can accelerate the oxidation of the solder plating on the termination and reduce the solderability of the components.**
- **Sealed plastic bags with desiccant shall be used to reduce the oxidation of the termination and shall only be opened prior to use. The products shall not be stored in areas where harmful gases containing sulfur or chlorine are present.**

17. Application:

- **Battery pack**
- **PC related equipment and peripherals (Hard drive,Printer,etc.)**
- **Portable devices (Mobile phone,PDA battery charger,etc.)**
- **Digital camera (Digital still camera)**
- **Game equipment**
- **LCD monitor,LCD modules**
- **Wireless basestation**

END

KLS ELECTRONIC CO;LTD

Engineering Product Specification

SMD FUSE 0603 SLOW ACTING



Table of Contents

Section	Title	Page
1.	Scope	3
2.	General	3
3.	Manufacturer and Production Facility	3
4.	Agency / Certificate Information	3
5.	Catalog Symbol	4
6.	Ordering Information	4
7.	Shape & Dimensions	5
8.	Recommended Land Patterns	6
9.	Materials	6
10.	Time Current Curve	6
11.	I^2T vs Time Curve	8
12.	Temperature Derating Curve	9
13.	Reliability Test	10
14.	Recommended Solder Curve	11
15.	Packaging	12
16.	Storage	13
17.	Application	13

1. Scope

This Specification applies to S0603 series SMD fuses.

2. General

- Slow Blow
- RoHS compliant
- Halogen-free
- 1.6mm×0.8mm physical size
- Thick film manufacturing method,ceramic substrate, silver fusing element
- Higher temperature profiles
- Excellent environmental integrity

3. Manufacturer and Production Facility

- Manufacturer

  Nanjing SINOCHIP Technology & development
  Co., Ltd. Qingma Road 6#
  Maqun Science & Technology Park
  Nanjing City, Jiangsu Province, P. R. China
  Phone: 086-25-52153380
  Fax: 086-25-52157065

4. Agency / Certificate Information

- ISO 9001:2000, Certificate Number 10807Q10334ROS
- UL Recognition Card:

  JDYX2.E319540, JDYX8.E319540

5. Catalog Symbol

Example S0603-1.0A

S 0603-1.0A

① ② ③ ④

①. Symbol of SINOCHIP Electrical Characteristic: S = Slow blow

②. Size Number

③. Ampere Rating: 1A

6. Ordering Information

Part Number	Marking	Current Rating (A)	Voltage Rating (V)	Interrupting Rating 32V DC	Typical Cold DCR* (Ω)	Nominal I^2T** (A^2S)
S0603 -0.5A	F	0.50	32	50A	1.148	0.0072
S0603-0.75A	G	0.75	32	50A	0.582	0.0113
S0603-1.0A	H	1.00	32	50A	0.260	0.0746
S0603-1.5A	K	1.50	32	50A	0.104	0.1125
S0603-2.0A	N	2.00	32	50A	0.054	0.1752
S0603-2.5A	O	2.50	32	50A	0.036	0.4001
S0603-3.0A	P	3.00	32	50A	0.027	0.7329
S0603-3.5A	R	3.50	32	50A	0.022	0.9758
S0603-4.0A	S	4.00	32	35A	0.016	2.1722
S0603-5.0A	T	5.00	32	35A	0.0105	2.9022
S0603-6.0A	6	6.00	32	35A	0.0075	8.4692

* Measured at≤10% rated current and 25℃.

** Melting I^2T at 10 times of rated current.

7. Shape & Dimensions: (mm)

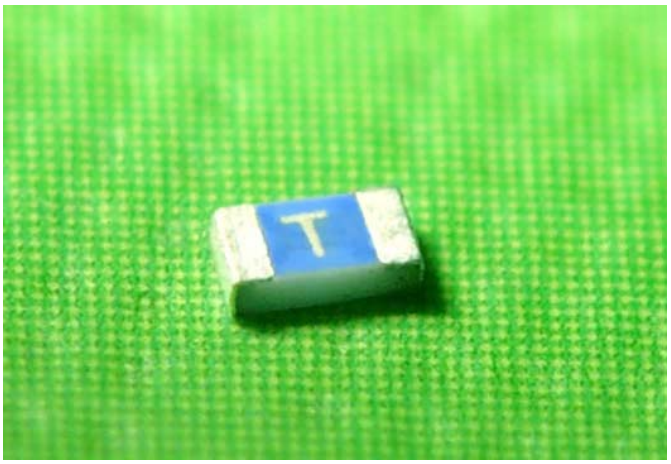

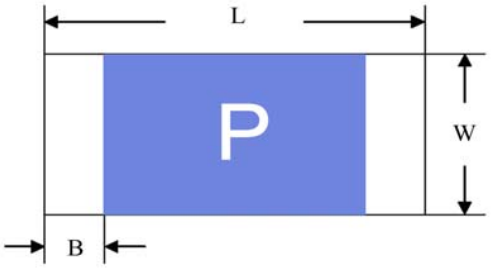



L	W	T	B
1.60±0.15	0.80±0.15	0.40±0.10	0.30±0.10

8. Recommended Land Patterns: (mm)

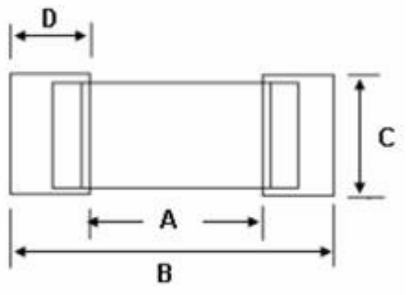

A	B	C	D
1.0±0.2	2.50±0.3	0.8±0.2	1.2±0.3

9. Materials:

	Components	Material
1	Substrate	Ceramic
2	Terminations	Silver over-plated with tin (100%)
3	Element	Silver or Silver / Palladium

10. Time Current Curve:

Electrical Characteristics		
Ampere Rating	**% of Current Rating**	**Opening Time**
500mA-6A	100%	4 Hours Min.
500mA-6A	200%	60 Seconds Max.
500mA-750mA	1000%	0.2-0.6mS
1A-6A	1000%	0.6-2.0mS

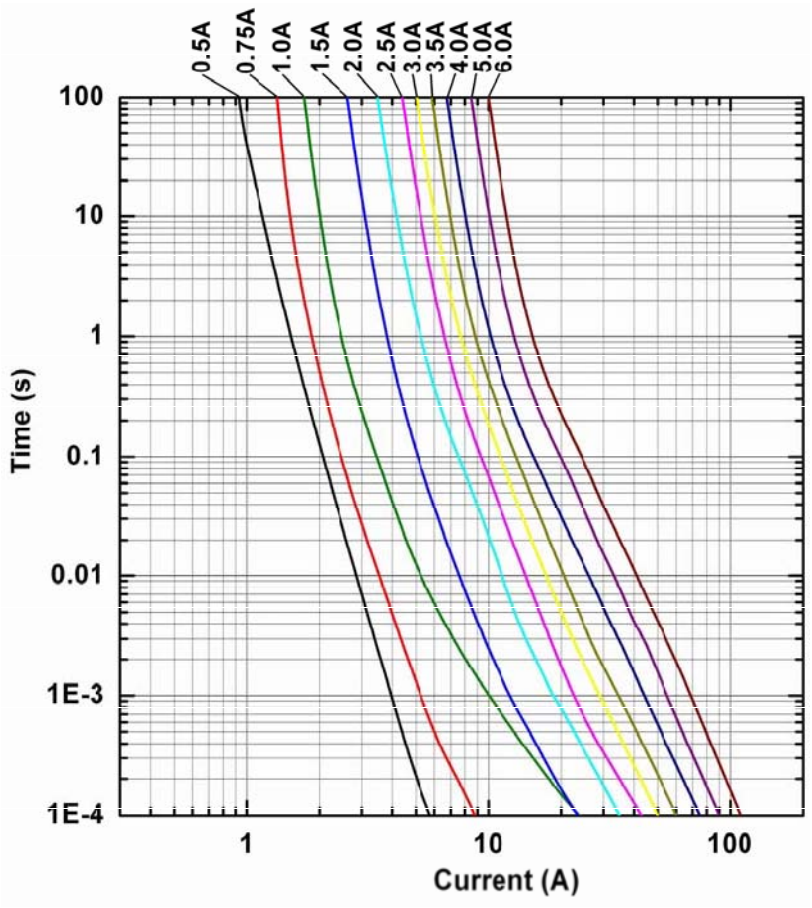

11. I^2T vs Time Curve:

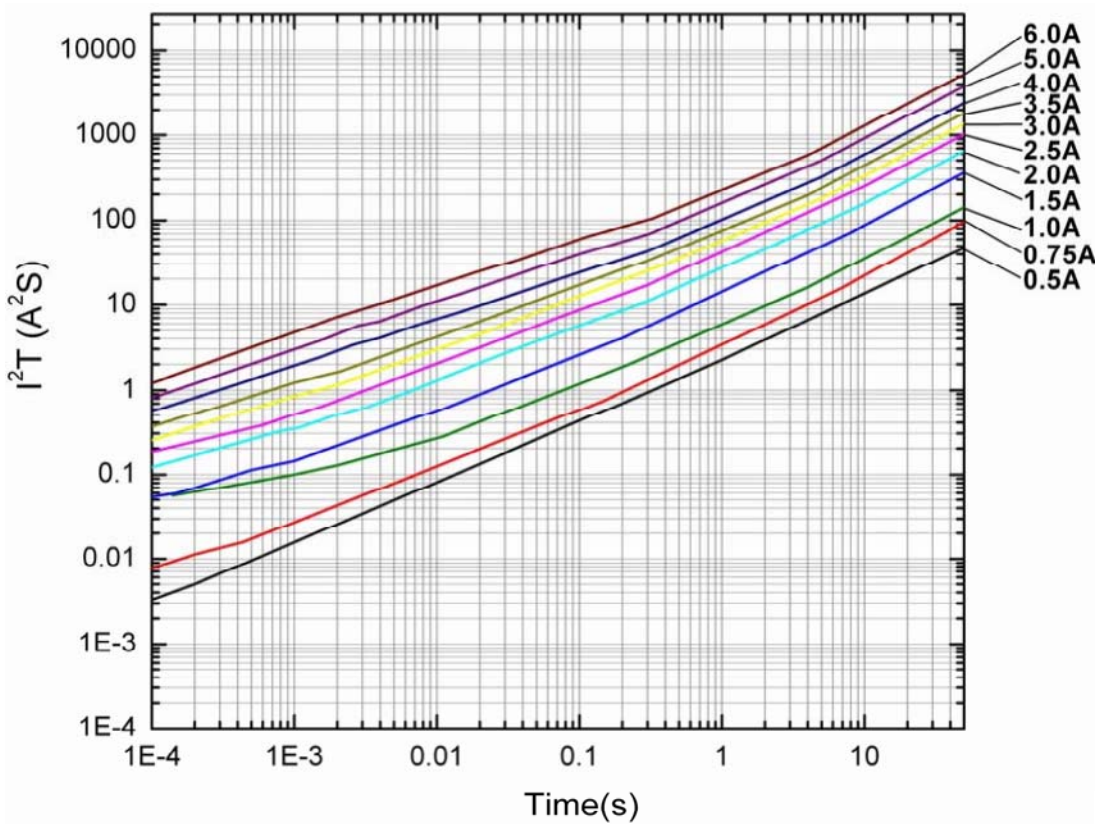

12. Temperature Derating Curve: (Ambient temperature on current-carrying capacity)

- **For Circuit,current rating shall be derated in accordannce with the figure.**
- **This current derating curve is for fusing characterisics.**

Example,

Work Temp:80℃, **Temp derating factor = 90%**

Melting $I^2t_{fuse} \geqslant I^2t_{pulse} / Fp / 0.9$

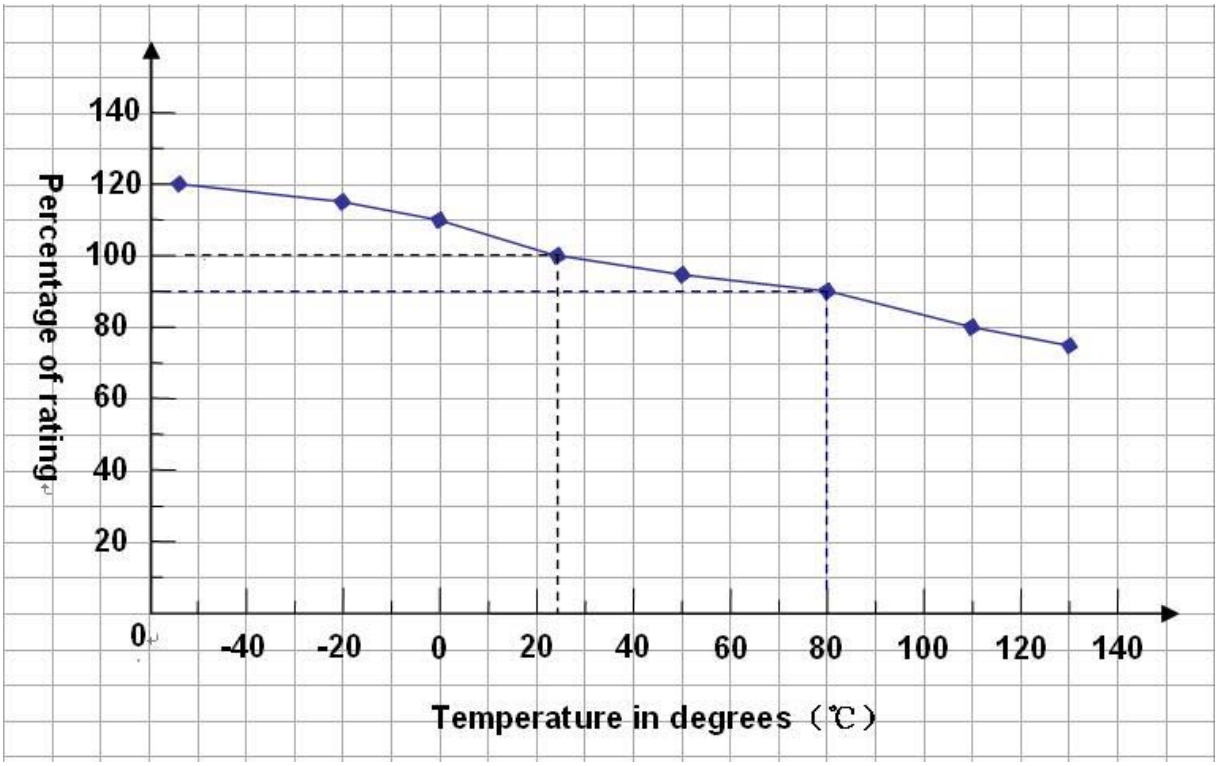

13. Reliability Test:

Characteristics	Test condition / Methods	Requirement	Test Reference
Carrying capacity	100% of its rated current	No Fusing，4hr min	Refer to SINOCHIP File
Fusing Time	200% of its rated current（500~6A）	Within 60sec	Refer to SINOCHIP File
	1000% of its rated current（500~750mA）	Within 0.0002~0.0006sec	Refer to SINOCHIP File
	1000% of its rated current（1~6A）	Within 0.0006~0.002sec	Refer to SINOCHIP File
Solderability	235°C±5℃, 3s±0.5s	95% coverage min	IEC60127/A.3.3; IEC60068-2-20; MIL-STD-202 Method 208H
Resistance to soldering	260°C±5℃, 10s±0.5s	△R:<10%	MIL-STD-202 Method 210
Bending test	Distance between holding points：90mm，Bending：1mm，1time，10sec	(1) No mechanical damages (2) △R: <10%	Refer to SINOCHIP File
High Temperature Operating Life	96hours, 125℃ at 60% rated current. Measure cold resistance and Time-Current characteristics.	(1)△R: <10%; (2)100% of Rating Current, Opening time >4 hours (3)200% of Rating Current, Opening time <60 seconds	MIL-STD-202 Method 108
Moisture Resistance	10 Cycles. Measure cold resistance and Time-Current characteristics.	(1)△R: <10%; (2)100% of Rating Current, Opening time >4 hours (3)200% of Rating Current, Opening time <60 seconds	MIL-STD-202 Method 106
High Temperature Exposure	1000 hrs. @ T=125℃. Unpowered. Measure cold resistance. and Time-Current characteristics.	(1)△R: <10%; (2)100% of Rating Current, Opening time >4 hours (3)200% of Rating Current, Opening time <60 seconds	MIL-STD-202 Method 108
Insulation Resistance	DC resistance	0.1MΩ min	IEC60127-4
ON /OFF Cycle Test	Surge current and 100% rated current; 50s ON; 10s OFF; 100,000 Cycles	(1)No open; (2)100% of Rating Current, Opening time >4 hours	Refer to SINOCHIP File

		(3)200% of Rating Current, Opening time <60 seconds		
Salt spray	5% salt solution，48 hours exposure	△R: <10%	MIL-STD-202 Method 101	
Thermal Shock	10 cycles between -55°C/+125°C, 30 minutes @each extreme	No mechanical damage; △R: <10%	IEC 60068-2-14	
Interrupting Ability	Loading current 50A	without permanent arcing,ignition and bursting of fuse link	UL248-14	

14. Recommended Solder Curve:

14.1 Infrared Reflow

14.1.1 Temperature:260℃

14.1.2 Time:30 Seconds Maximum

14.1.3 Recommend Reflow profile

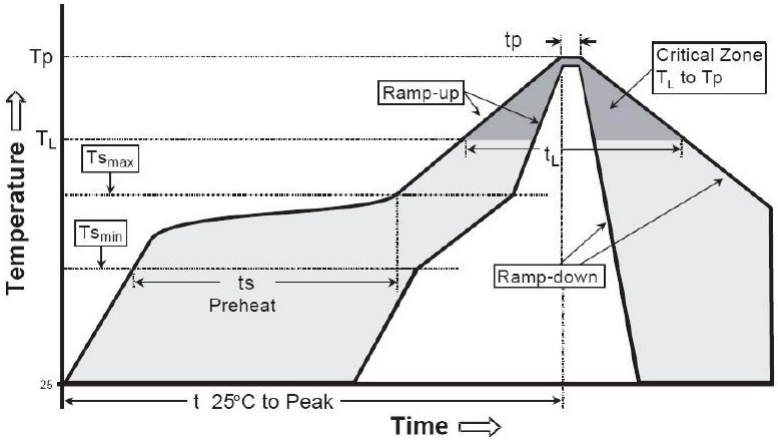

Profile Feature	Pb-Free Assembly
Average Ramp-Up Rate(Ts_{max} to Tp)	3℃/second max.
Preheat Temperature Min(Ts_{min}) Temperature Max(Ts_{max}) Time(Ts_{min} to Ts_{max})	 150℃ 200℃ 60-120 seconds
Peak Temperature(Tp)	260℃
Time within 5℃ of actual Peak Temperature(Tp)	20-40 seconds
Ramp-Down Rate	6℃/second max.
Time 25℃ to Peak Temperature	8 minutes max.

14.2 Wave soldering

14.2.1 Reservoir Temperature:260℃
14.2.2 Time in Reservior:10 Seconds Maximum

14.3 Hand Soldering
14.3.1 Temperature:380℃
14.3.2 Time:5 Seconds Maximum

15. Packaging:

- **5,000 pieces of fuses in paper taper and reeled on a 178mm(7 inch) reel.**

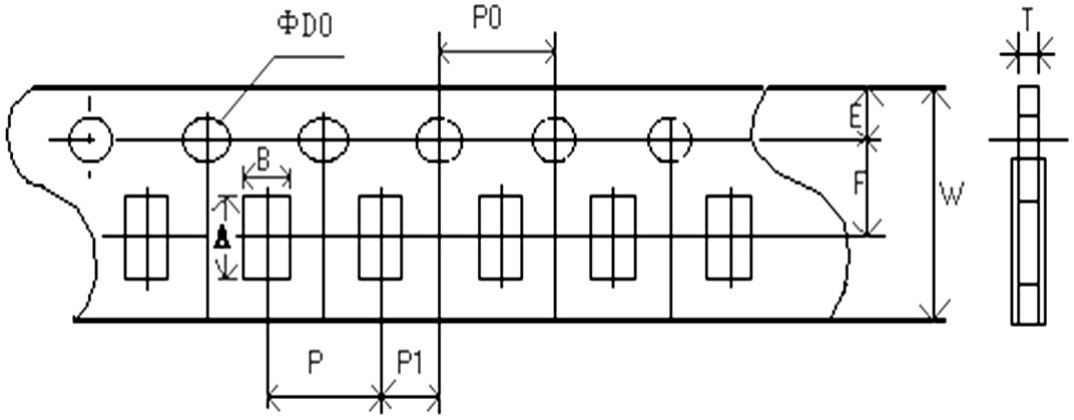

Type	A	B	W	F	E
S0603	1.85±0.10	1.10±0.10	8.00±0.20	3.50±0.05	1.75±0.10
Type	**P**	**P0**	**P1**	**D0**	**T**
S0603	4.00±0.10	4.00±0.10	2.00±0.05	1.50±0.10	0.60±0.10

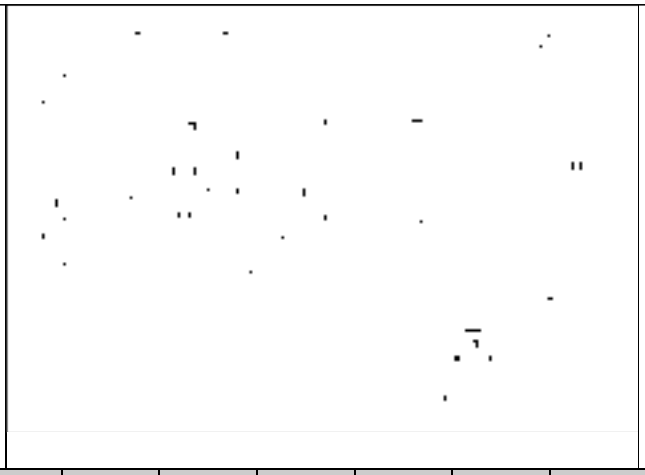

Type	M	W	T	A	B	C	D
S0603	178 ±2.0	10.0 ±1.5	12.0 ±2.0	2.5 ±0.5	13.0 ±0.5	31.0 ±1.0	80.0 ±1.0

16. Storage:

- **The maximum ambient temperature shall not exceed 40℃.Storage temperature higher than 40℃ could result in the deformation of packaging materials.**
- **The maximum relative humidity recommended for storage is 65%.High humidity with high temperature can accelerate the oxidation of the solder plating on the termination and reduce the solderability of the components.**
- **Sealed plastic bags with desiccant shall be used to reduce the oxidation of the termination and shall only be opened prior to use. The products shall not be stored in areas where harmful gases containing sulfur or chlorine are present.**

17. Application:

- **Battery pack**
- **PC related equipment and peripherals (Hard drive,Printer,etc.)**
- **Portable devices (Mobile phone,PDA battery charger,etc.)**
- **Digital camera (Digital still camera)**
- **Game equipment**
- **LCD monitor,LCD modules**
- **Wireless basestation**

END

KLS ELECTRONIC CO;LTD

Engineering Product Specification

SMD FUSE 1206 FAST ACTING

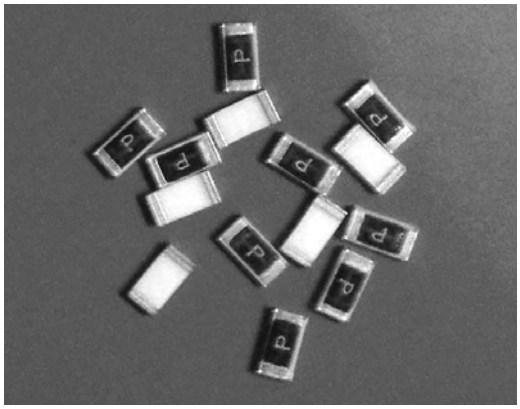

Table of Contents

Section	Title	Page
1.	Scope	3
2.	General	3
3.	Manufacturer and Production Facility	3
4.	Agency / Certificate Information	3
5.	Catalog Symbol	4
6.	Ordering Information	4
7.	Shape & Dimensions	5
8.	Recommended Land Patterns	6
9.	Materials	6
10.	Time Current Curve	6
11.	I^2T vs Time Curve	8
12.	Temperature Derating Curve	9
13.	Reliability Test	10
14.	Recommended Solder Curve	11
15.	Packaging	12
16.	Storage	13
17.	Application	13

1. Scope

This Specification applies to F1206 series SMD fuses.

2. General

- Fast acting
- RoHS compliant
- Halogen-free
- 3.1mm×1.55mm physical size
- Thick film manufacturing method,ceramic substrate, silver fusing element
- Higher temperature profiles
- Excellent environmental integrity

5. Catalog Symbol

Example F1206-1.0A

F 1206- 1.0A

① ② ③

①. Symbol of Sinochip Electrical Characteristic: F = Fast acting

②. Size Number

③. Ampere Rating: 1A

6. Ordering Information

Part Number	Mark	Current Rating (A)	Voltage Rating (V)	Interrupting Rating 32V DC	Typical Cold DCR* (Ω)	Nominal I^2T** (A^2S)
F1206-0.5A	F	0.50	32	50A	1.375	0.0155
F1206-0.75A	G	0.75	32	50A	0.605	0.0267
F1206-1.0A	H	1.00	32	50A	0.270	0.0279
F1206-1.5A	K	1.50	32	50A	0.130	0.0491
F1206-2.0A	N	2.00	32	50A	0.074	0.1251
F1206-2.5A	O	2.50	32	50A	0.051	0.1255
F1206-3.0A	P	3.00	32	50A	0.033	0.1350
F1206-3.15A	R	3.15	32	50A	0.030	0.1490
F1206-3.5A	R	3.50	32	50A	0.0325	0.1948
F1206-4.0A	S	4.00	32	35A	0.021	0.3025
F1206-5.0A	T	5.00	32	35A	0.0165	0.5207
F1206-6.0A	6	6.00	32	35A	0.0145	0.8134
F1206-7.0A	U	7.00	32	35A	0.0085	4.0418

* Measured at ≤10% rated current and 25℃.

** Melting I^2T at 10 times of rated current.

7. Shape & Dimensions: (mm)

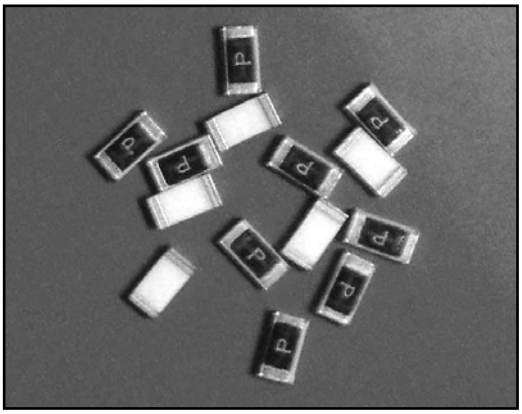

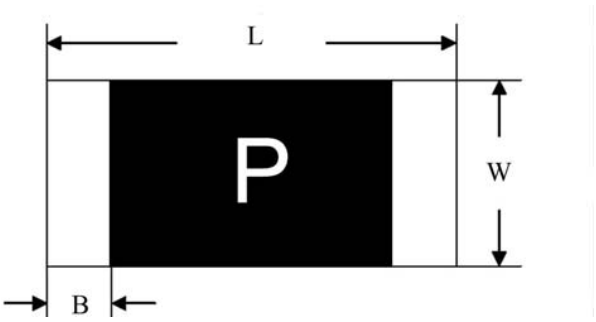



L	W	T	B
3.10±0.20	1.55±0.20	0.55±0.20	0.40±0.10

8. Recommended Land Patterns: (mm)

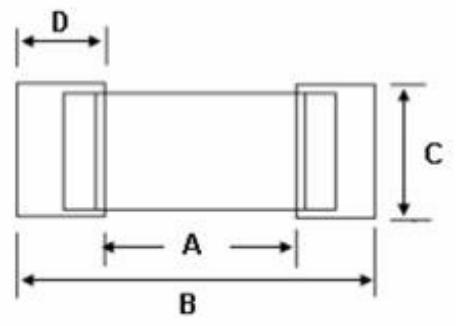

A	B	C	D
2.1±0.3	4.7±0.5	1.5±0.3	1.5±0.3

9. Materials:

	Components	Material
1	Substrate	Ceramic
2	Terminations	Silver over-plated with tin (100%)
3	Element	Silver or Silver/palladium

10. Time Current Curve:

Electrical Characteristics		
Ampere Rating	% of Current Rating	Opening Time
500mA-7A	100%	4 Hours Min.
500mA-7A	200%	60 Seconds Max.
500mA-7A	250%	5 Seconds Max.

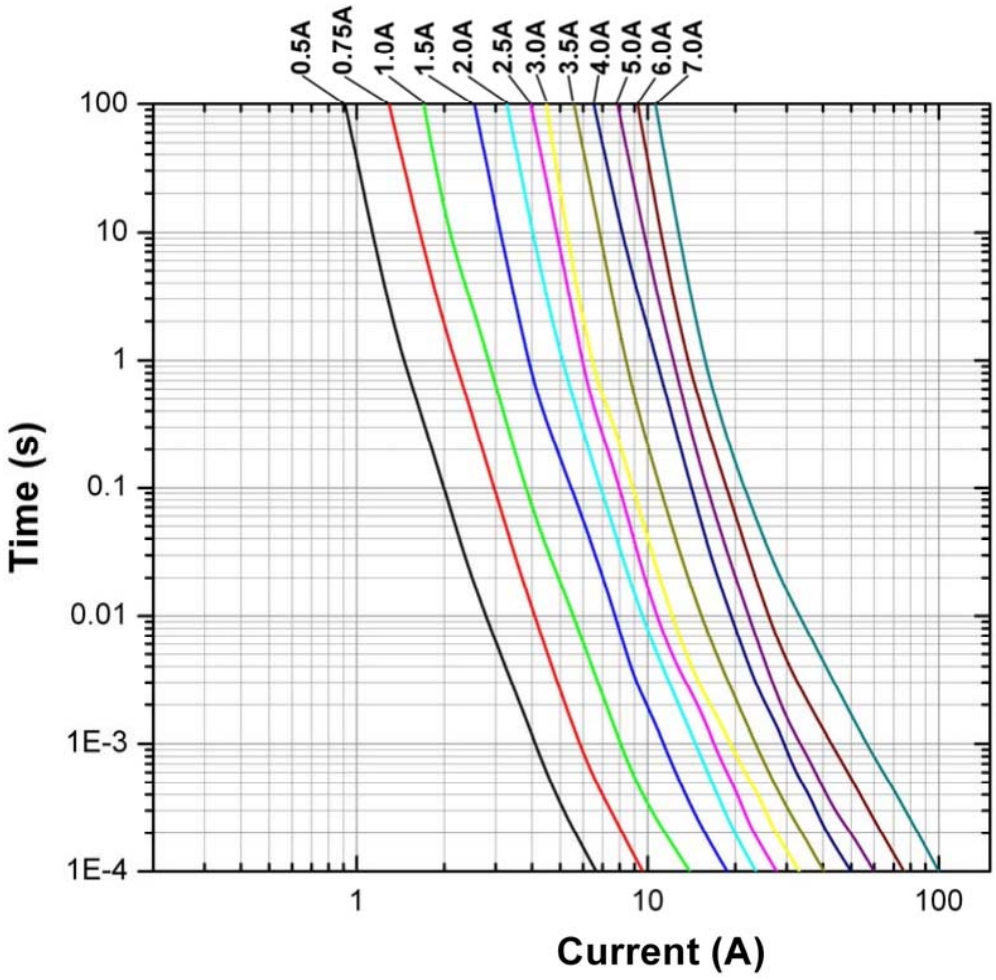

11. I^2T vs Time Curve:

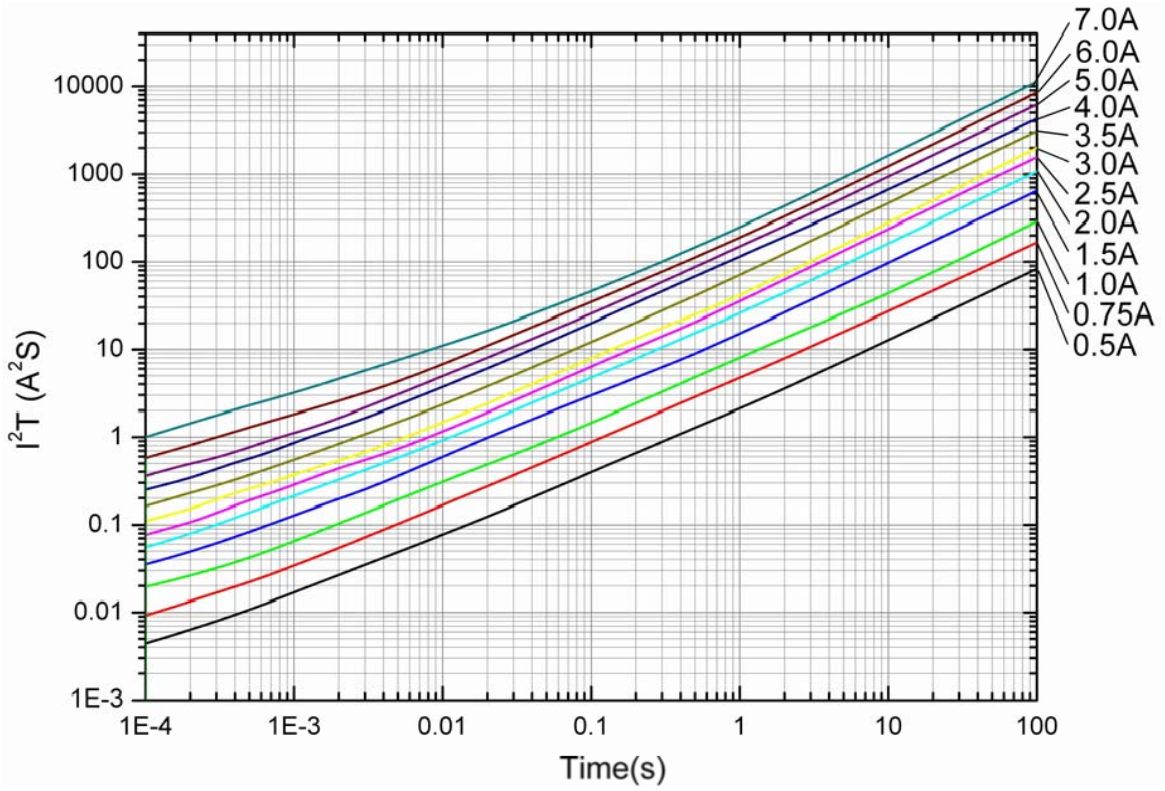

12. Temperature Derating Curve: (Ambient temperature on current-carrying capacity)

- **For Circuit,current rating shall be derated in accordannce with the figure.**
- **This current derating curve is for fusing characterisics.**

Example,

Work Temp:80℃, **Temp derating factor = 90%**

Melting $I^2t_{fuse} \geqslant I^2t_{pulse}/ Fp / 0.9$

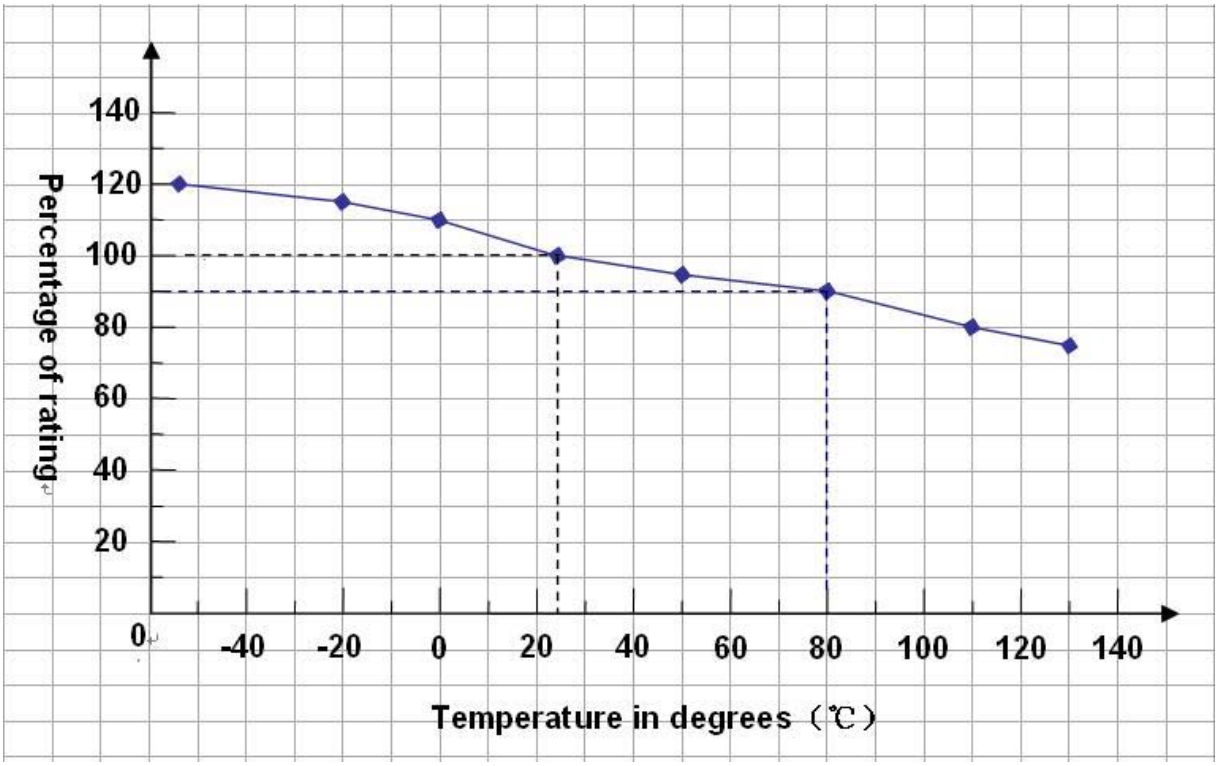

13. Reliability Test:

Characteristics	Test condition / Methods	Requirement	Test Reference
Carrying capacity	100% of its rated current	No Fusing，4hr min	Refer to SINOCHIP File
Fusing Time	200% of its rated current	Within 60sec	Refer to SINOCHIP File
	250% of its rated current	Within 5sec	Refer to SINOCHIP File
Solderability	235°C±5 ℃, 3s±0.5s	95% coverage min	IEC60127/A.3.3; IEC60068-2-20; MIL-STD-202 Method 208H
Resistance to soldering	260°C±5℃, 10s±0.5s	△R:<10%	MIL-STD-202 Method 210
Bending test	Distance between holding points：90mm，Bending：1mm，1time，10sec	(1) No mechanical damages (2) △R: <10%	Refer to SINOCHIP File
High Temperature Operating Life	96hours, 125℃ at 60% rated current. Measure cold resistance and Time-Current characteristics.	(1)△R: <10%; (2)100% of Rating Current, Opening time >4 hours (3)200% of Rating Current, Opening time <60 seconds	MIL-STD-202 Method 108
Moisture Resistance	10 Cycles. Measure cold resistance and Time-Current characteristics.	(1)△R: <10%; (2)100% of Rating Current, Opening time >4 hours (3)200% of Rating Current, Opening time <60 seconds	MIL-STD-202 Method 106
High Temperature Exposure	1000 hrs. @ T=125℃. Unpowered. Measure cold resistance. and Time-Current characteristics.	(1)△R: <10%; (2)100% of Rating Current, Opening time >4 hours (3)200% of Rating Current, Opening time <60 seconds	MIL-STD-202 Method 108
Insulation Resistance	DC resistance	0.1MΩ min	IEC60127-4
ON /OFF Cycle Test	Surge current and 100% rated current; 50s ON; 10s OFF; 100,000 Cycles	(1)No open; (2)100% of Rating Current, Opening time >4 hours (3)200% of Rating Current, Opening time <60 seconds	Refer to SINOCHIP File

Salt spray	5% salt solution，48 hours exposure	△R: <10%	MIL-STD-202 Method 101	
Thermal Shock	10 cycles between -55°C/+125°C, 30 minutes @each extreme	No mechanical damage; △R: <10%	IEC 60068-2-14	
Interrupting Ability	Loading current 50A	without permanent arcing,ignition and bursting of fuse link	UL248-14	

14. Recommended Solder Curve:

14.1 Infrared Reflow

14.1.1 Temperature:260℃

14.1.2 Time:30 Seconds Maximum

14.1.3 Recommend Reflow profile

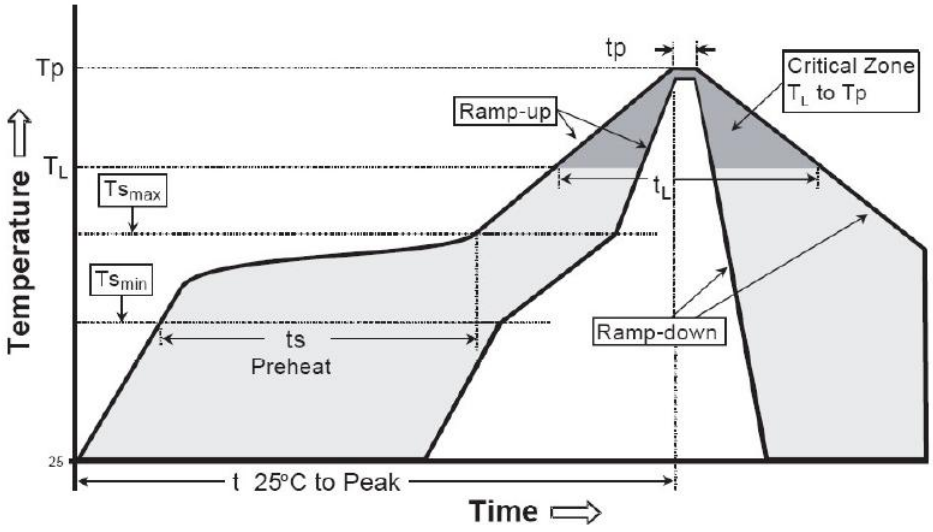

Profile Feature	Pb-Free Assembly
Average Ramp-Up Rate(Ts_{max} to Tp)	3℃/second max.
Preheat Temperature Min(Ts_{min}) Temperature Max(Ts_{max}) Time(Ts_{min} to Ts_{max})	150℃ 200℃ 60-120 seconds
Peak Temperature(Tp)	260℃
Time within 5℃ of actual Peak Temperature(Tp)	20-40 seconds
Ramp-Down Rate	6℃/second max.
Time 25℃ to Peak Temperature	8 minutes max.

14.2 Wave soldering

14.2.1 Reservoir Temperature:260℃

14.2.2 Time in Reservior:10 Seconds Maximum

14.3 Hand Soldering

14.3.1 Temperature:380℃

14.3.2 Time:5 Seconds Maximum

15. Packaging:

• 5,000 pieces of fuses in paper taper and reeled on a 178mm(7 inch) reel.

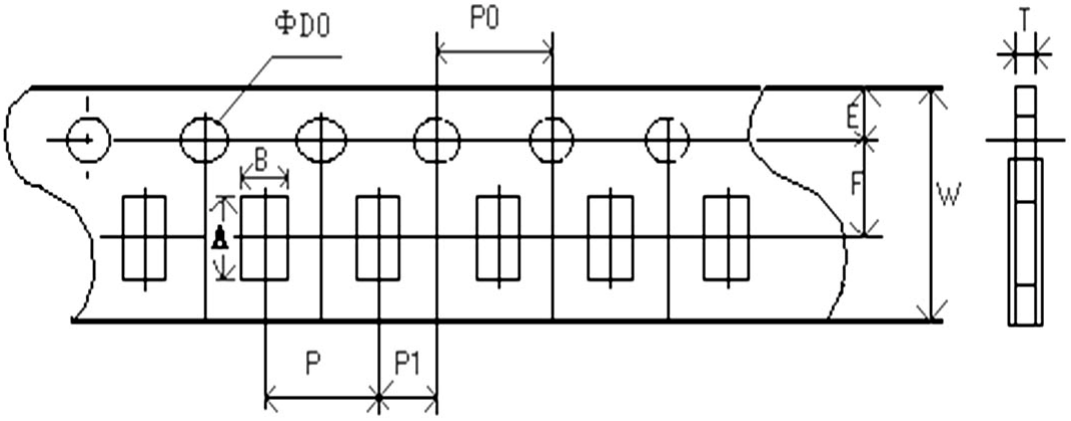

Type	A	B	W	F	E
F1206	3.50 ±0.20	1.90 ±0.20	8.00 ±0.20	3.50 ±0.05	1.75 ±0.10
Type	**P**	**P0**	**P1**	**D0**	**T**
F1206	4.00 ±0.10	4.00 ±0.10	2.00 ±0.05	1.50 ±0.10	0.75 ±0.10

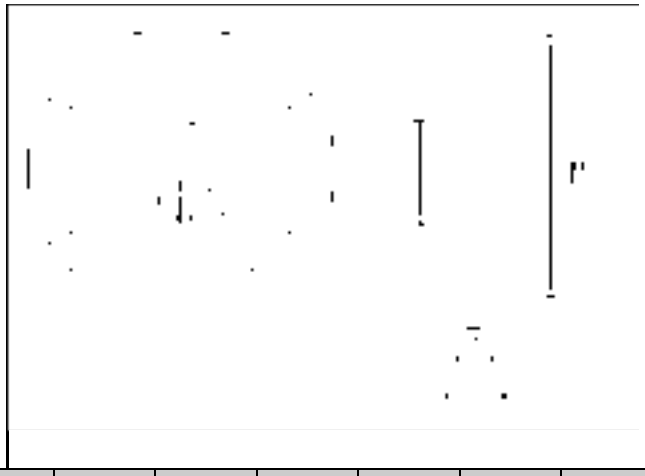

Type	M	W	T	A	B	C	D
F1206	178 ±2.0	10.0 ±1.5	12.0 ±2.0	2.5 ±0.5	13.0 ±0.5	31.0 ±1.0	80.0 ±1.0

16. Storage:

- **The maximum ambient temperature shall not exceed 40℃.Storage temperature higher than 40℃ could result in the deformation of packaging materials.**
- **The maximum relative humidity recommended for storage is 65%.High humidity with high temperature can accelerate the oxidation of the solder plating on the termination and reduce the solderability of the components.**
- **Sealed plastic bags with desiccant shall be used to reduce the oxidation of the termination and shall only be opened prior to use. The products shall not be stored in areas where harmful gases containing sulfur or chlorine are present.**

17. Application:

- **Battery pack**
- **PC related equipment and peripherals(Hard drive,Printer,etc.)**
- **Portable devices(Mobile phone,PDA battery charger,etc.)**
- **Digital camera(Digital still camera)**
- **Game equipment**
- **LCD monitor,LCD modules**
- **Wireless basestation**

END

KLS ELECTRONIC CO;LTD

Engineering Product Specification

SMD FUSE 1206 SLOW ACTING

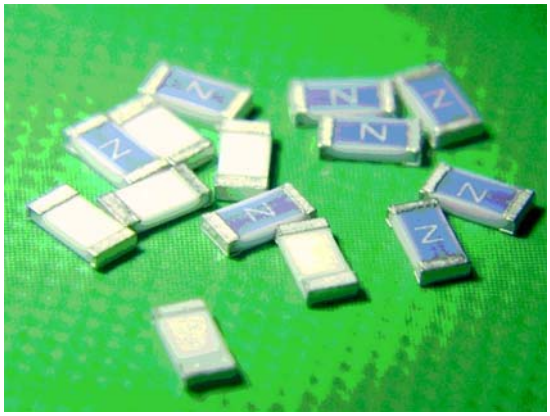

Table of Contents

Section	Title	Page
1.	Scope	3
2.	General	3
3.	Manufacturer and Production Facility	3
4.	Agency / Certificate Information	3
5.	Catalog Symbol	4
6.	Ordering Information	4
7.	Shape & Dimensions	5
8.	Recommended Land Patterns	6
9.	Materials	6
10.	Time Current Curve	6
11.	I^2T vs Time Curve	8
12.	Temperature Derating Curve	9
13.	Reliability Test	10
14.	Recommended Solder Curve	11
15.	Packaging	12
16.	Storage	13
17.	Application	13

1. Scope

This Specification applies to S1206 series SMD fuses.

2. General

- Slow Blow(Time Delay),high inrush withstand capability
- RoHS compliant
- Halogen-free
- 3.1mm×1.55mm physical size
- Thick film manufacturing method,ceramic substrate, silver fusing element
- Higher temperature profiles
- Excellent environmental integrity

5. Catalog Symbol

Example S1206-1.0A

S 1206-1.0A

① ② ③ ④

①. Symbol of SINOCHIP Electrical Characteristic: S = Slow blow

②. Size Number

③. Ampere Rating: 1A

6. Ordering Information

Part Number	Mark	Current Rating (A)	Voltage Rating (V)	Interrupting Rating 32V DC	Typical Cold DCR* (Ω)	Nominal I^2T** (A^2S)
S1206-0.5A	F	0.50	32	50A	1.344	0.0200
S1206-0.75A	G	0.75	32	50A	0.672	0.0358
S1206-1.0A	H	1.00	32	50A	0.358	0.1945
S1206-1.5A	K	1.50	32	50A	0.157	0.4137
S1206-2.0A	N	2.00	32	50A	0.103	0.4383
S1206-2.5A	O	2.50	32	50A	0.073	0.7343
S1206-3.0A	P	3.00	32	50A	0.041	1.5267
S1206-3.5A	R	3.50	32	50A	0.035	1.5312
S1206-4.0A	S	4.00	32	35A	0.027	2.5356
S1206-5.0A	T	5.00	32	35A	0.019	3.3999
S1206-6.0A	6	6.00	32	35A	0.015	5.7505
S1206-7.0A	U	7.00	32	35A	0.008	8.8200

* Measured at ≤10% rated current and 25℃.

** Melting I^2T at 10 times of rated current.

7. Shape & Dimensions: (mm)

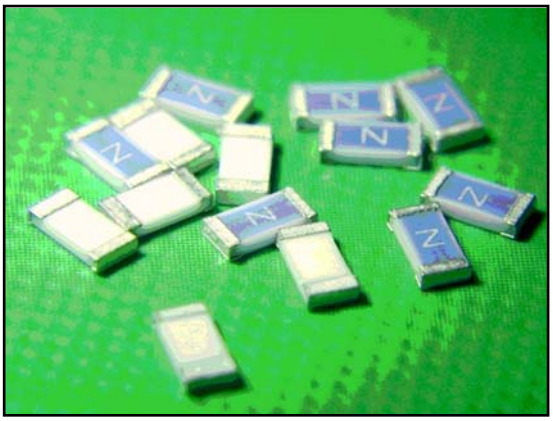

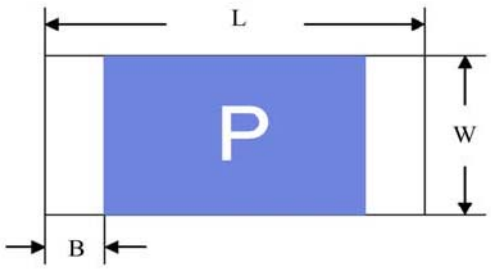

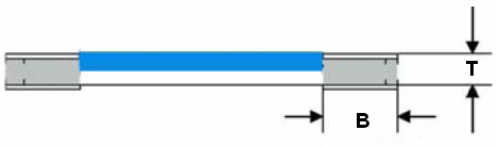

L	W	T	B
3.10±0.20	1.55±0.20	0.55±0.20	0.40±0.10

8. Recommended Land Patterns: (mm)

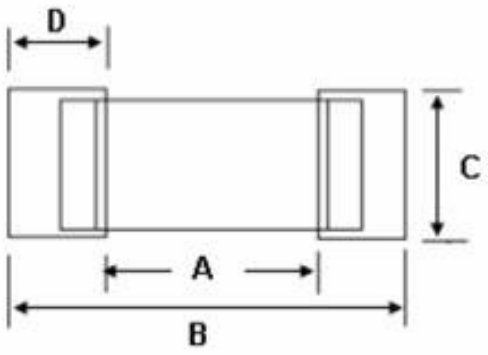

A	B	C	D
2.1±0.3	4.7±0.5	1.5±0.3	1.5±0.3

9. Materials:

	Components	Material
1	Substrate	Ceramic
2	Terminations	Silver over-plated with tin (100%)
3	Element	Silver or Silver / Palladium

10. Time Current Curve:

Electrical Characteristics		
Ampere Rating	**% of Current Rating**	**Opening Time**
500mA-7A	100%	4 Hours Min.
500mA-7A	200%	60 Seconds Max.
500mA-750mA	1000%	0.5~4ms
1A-7A	1000%	1-5ms

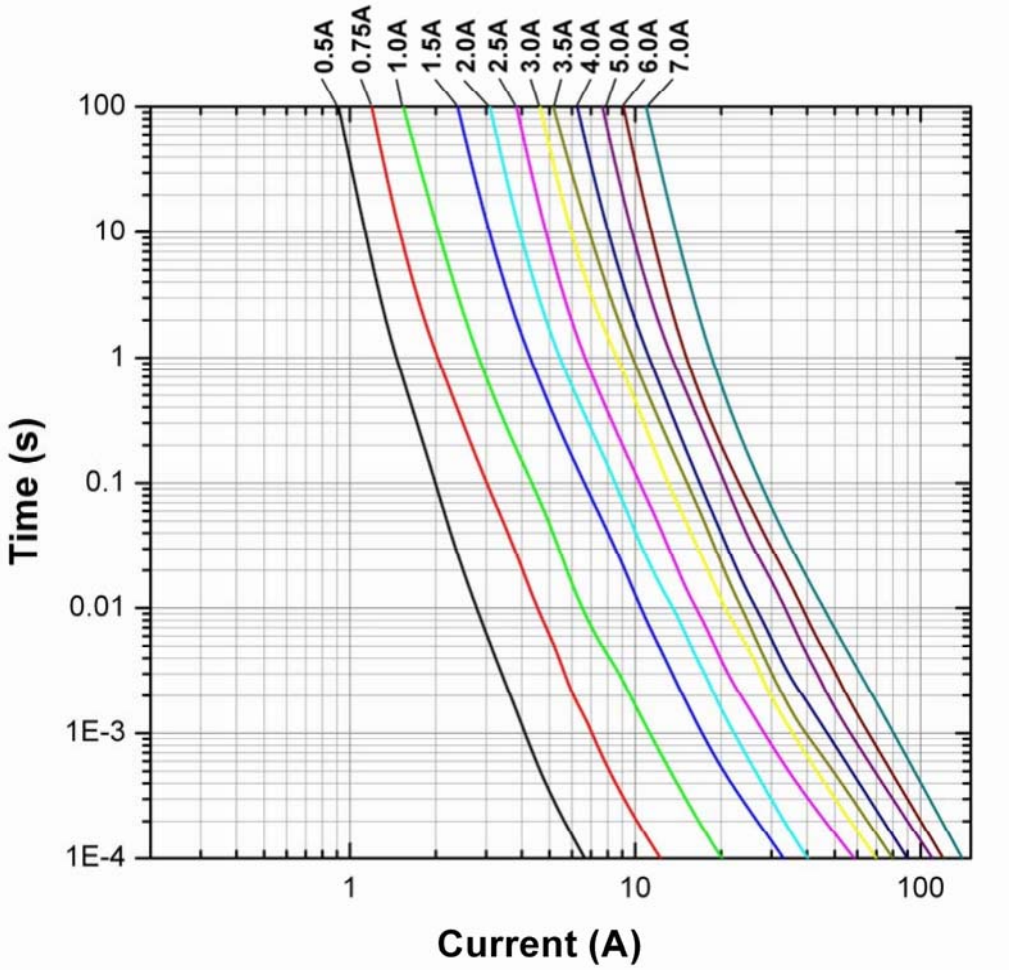

11. I^2T vs Time Curve:

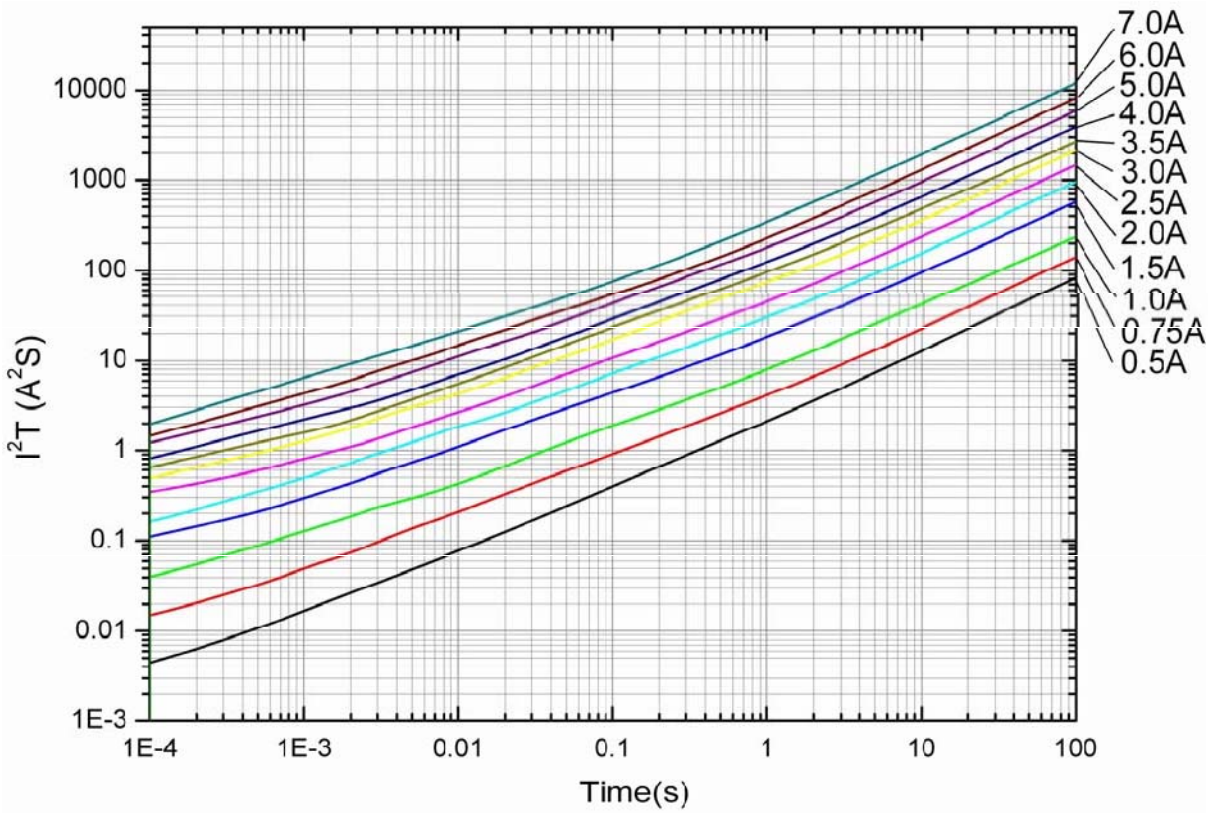

12. Temperature Derating Curve: (Ambient temperature on current-carrying capacity)

- **For Circuit,current rating shall be derated in accordannce with the figure.**
- **This current derating curve is for fusing characterisics.**

Example,

Work Temp:80℃, **Temp derating factor = 90%**

Melting $I^2t_{fuse} \geqslant I^2t_{pulse} / Fp / 0.9$

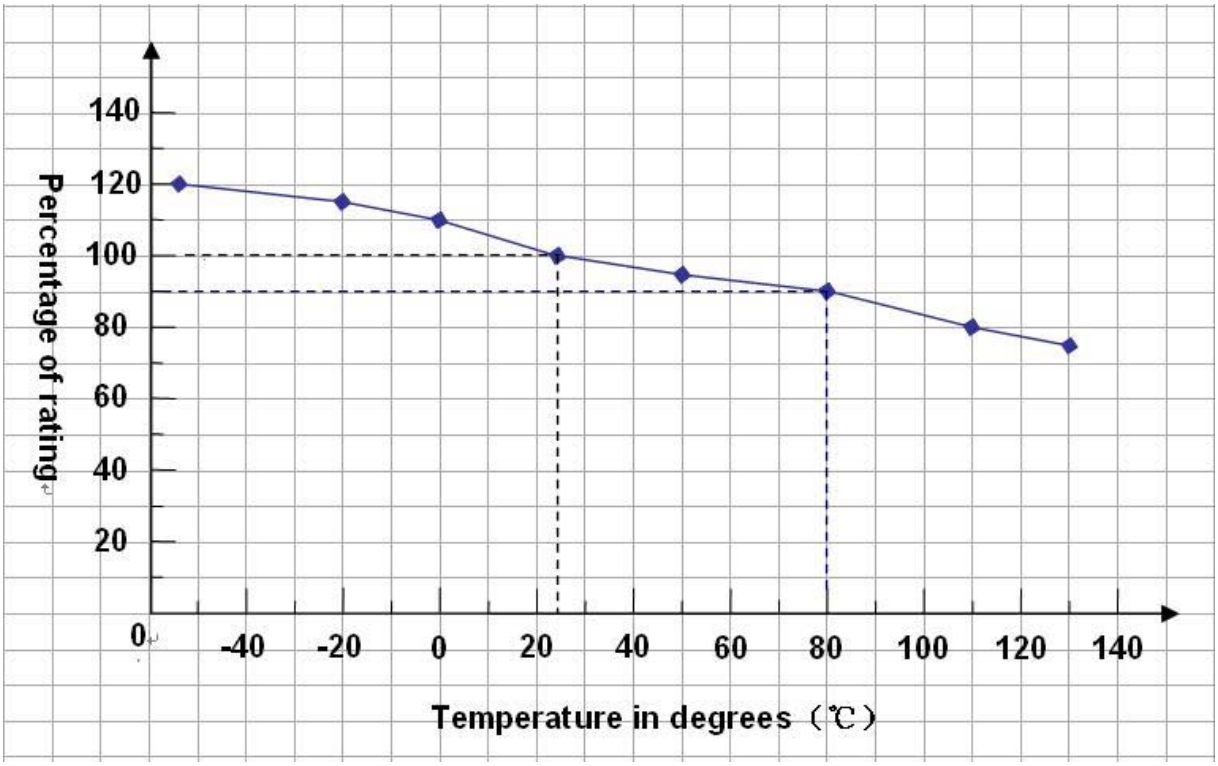

13. Reliability Test:

Characteristics	Test condition / Methods	Requirement	Test Reference
Carrying capacity	100% of its rated current	No Fusing，4hr min	Refer to SINOCHIP File
Fusing Time	200% of its rated current（500~7A）	Within 60sec	Refer to SINOCHIP File
	1000% of its rated current（500~750mA）	Within 0.0005~0.004sec	Refer to SINOCHIP File
	1000% of its rated current（1~7A）	Within 0.001~0.005sec	Refer to SINOCHIP File
Solderability	235°C±5 ℃， 3s±0.5s	95% coverage min	IEC60127/A.3.3; IEC60068-2-20; MIL-STD-202 Method 208H
Resistance to soldering	260°C±5℃， 10s±0.5s	△R:<10%	MIL-STD-202 Method 210
Bending test	Distance between holding points：90mm，Bending：1mm，1time，10sec	(1) No mechanical damages (2) △R: <10%	Refer to SINOCHIP File
High Temperature Operating Life	96hours, 125℃ at 60% rated current. Measure cold resistance and Time-Current characteristics.	(1)△R: <10%; (2)100% of Rating Current, Opening time >4 hours (3)200% of Rating Current, Opening time <60 seconds	MIL-STD-202 Method 108
Moisture Resistance	10 Cycles. Measure cold resistance and Time-Current characteristics.	(1)△R: <10%; (2)100% of Rating Current, Opening time >4 hours (3)200% of Rating Current, Opening time <60 seconds	MIL-STD-202 Method 106
High Temperature Exposure	1000 hrs. @ T=125℃. Unpowered. Measure cold resistance. and Time-Current characteristics.	(1)△R: <10%; (2)100% of Rating Current, Opening time >4 hours (3)200% of Rating Current, Opening time <60 seconds	MIL-STD-202 Method 108
Insulation Resistance	DC resistance	0.1MΩ min	IEC60127-4
ON /OFF Cycle Test	Surge current and 100% rated current; 50s ON; 10s OFF; 100,000 Cycles	(1)No open; (2)100% of Rating Current, Opening time >4 hours (3)200% of Rating Current, Opening time	Refer to SINOCHIP File

			<60 seconds	
Salt spray	5% salt solution，48 hours exposure	△R: <10%	MIL-STD-202 Method 101	
Thermal Shock	10 cycles between -55°C/+125°C, 30 minutes @each extreme	No mechanical damage; △R: <10%	IEC 60068-2-14	
Interrupting Ability	Loading current 50A	without permanent arcing,ignition and bursting of fuse link	UL248-14	

14. Recommended Solder Curve:

14.1 Infrared Reflow

14.1.1 Temperature:260℃

14.1.2 Time:30 Seconds Maximum

14.1.3 Recommend Reflow profile

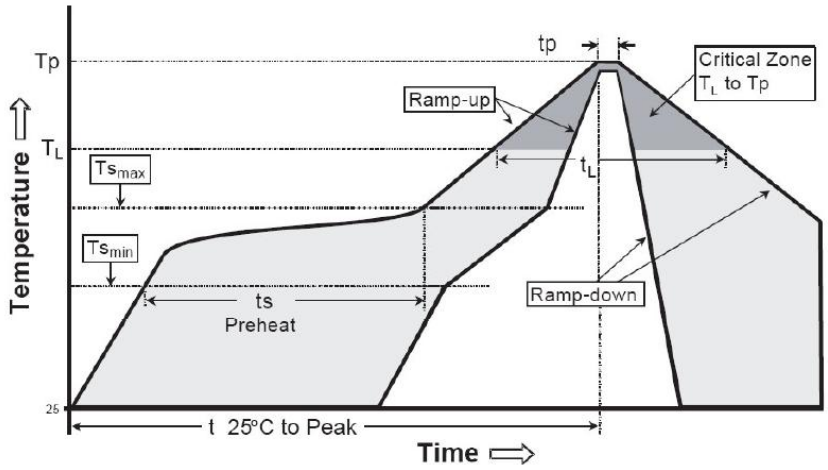

Profile Feature	Pb-Free Assembly
Average Ramp-Up Rate(Ts_{max} to Tp)	3℃/second max.
Preheat Temperature Min(Ts_{min}) Temperature Max(Ts_{max}) Time(Ts_{min} to Ts_{max})	 150℃ 200℃ 60-120 seconds
Peak Temperature(Tp)	260℃
Time within 5℃ of actual Peak Temperature(Tp)	20-40 seconds
Ramp-Down Rate	6℃/second max.
Time 25℃ to Peak Temperature	8 minutes max.

14.2 Wave soldering

14.2.1 Reservoir Temperature:260℃

14.2.2 Time in Reservior:10 Seconds Maximum

14.3 Hand Soldering

14.3.1 Temperature:380℃

14.3.2 Time:5 Seconds Maximum

15. Packaging:

• 5,000 pieces of fuses in paper taper and reeled on a 178mm(7 inch) reel.

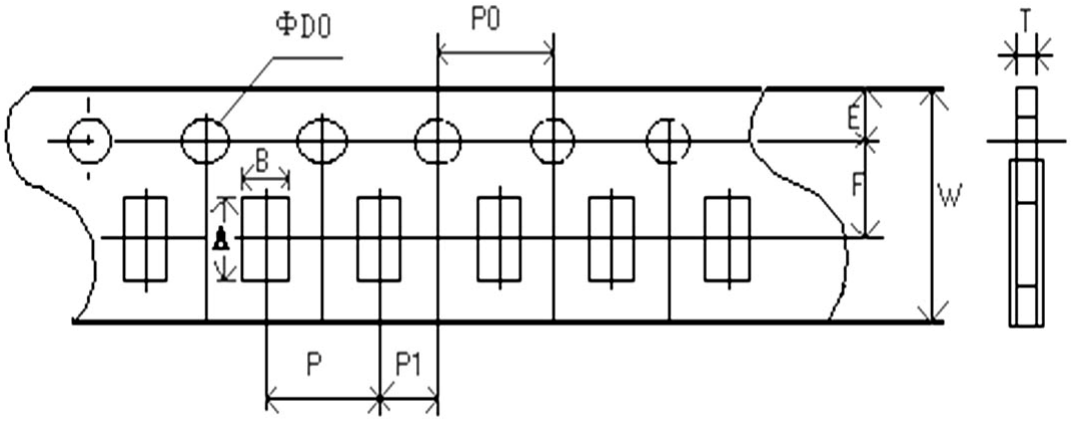

Type	A	B	W	F	E
S1206	3.50 ±0.20	1.90 ±0.20	8.00 ±0.20	3.50 ±0.05	1.75 ±0.10
Type	**P**	**P0**	**P1**	**D0**	**T**
S1206	4.00 ±0.10	4.00 ±0.10	2.00 ±0.05	1.50 ±0.10	0.75 ±0.10

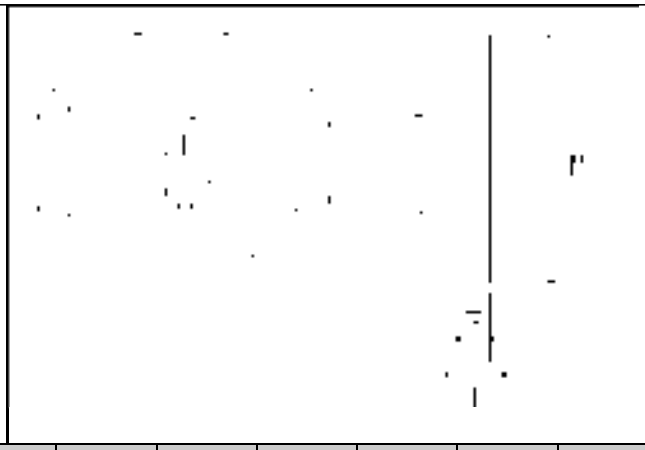

Type	M	W	T	A	B	C	D
S1206	178 ±2.0	10.0 ±1.5	12.0 ±2.0	2.5 ±0.5	13.0 ±0.5	31.0 ±1.0	80.0 ±1.0

16. Storage:

- **The maximum ambient temperature shall not exceed 40℃.Storage temperature higher than 40℃ could result in the deformation of packaging materials.**
- **The maximum relative humidity recommended for storage is 65%.High humidity with high temperature can accelerate the oxidation of the solder plating on the termination and reduce the solderability of the components.**
- **Sealed plastic bags with desiccant shall be used to reduce the oxidation of the termination and shall only be opened prior to use. The products shall not be stored in areas where harmful gases containing sulfur or chlorine are present.**

17. Application:

- **PC related equipment and peripherals(Hard drive,Printer,etc.)**
- **Portable devices(Mobile phone,PDA battery charger,etc.)**
- **Digital camera(Digital still camera)**
- **Game equipment**
- **LCD monitor,LCD modules,LCD backlight inverter,LCD panel**
- **Wireless basestation**
- **Cooling fan system**
- **Networking**
- **Industrial equipment**
- **Medical equipment**

END

KLS ELECTRONIC CO;LTD

Engineering Product Specification

SMD FUSE 2410 FAST ACTING





General

- Fast acting， Inrush withstand capability
- Wire-In-Air performance
- Wide range of current rating available
- 6.1mm× 2.5mm spuare shape surface mount
- Higher temperature profiles
- -50℃~125℃ operating temperature
- Excellent environmental integrity
- RoHS compliant
- Halogen-free

Agency / Certificate Information

Agency	File Number	Ampere Range
c UL us		1A~20A
		1A~20A
PS E		1A~5A
		6.3A~10A

Application

- Battery pack
- PC related equipment and peripherals (Hard drive,Printer,etc.)
- Digital camera (Digital still camera)
- LCD monitor,LCD modules
- Wireless basestation
- Power supply
- Medical device

Ordering Information

Part Number	Current Rating (A)	Voltage Rating (V)	Interrupting Rating	Typical Cold DCR* (mΩ)	Nominal I^2T** (A^2S)
F2410 -1.0A	1	125	UL 50A 125V AC 160V DC PSE 100A 100V AC	100	0.355
F2410-1.25A	1.25	125		89	0.481
F2410-1.6A	1.6	125		58	0.847
F2410-2.0A	2	125		32	0.84
F2410-2.5A	2.5	125		27	1.403
F2410-3.15A	3.15	125		21	2.054
F2410-4.0A	4	125		16	3.44
F2410-5.0A	5	125		14	4.843
F2410-6.3A	6.3	125		10	10.558
F2410-7.0A	7	125		9.4	10.584
F2410-8.0A	8	125		7.4	17.628
F2410-10.0A	10	125		5.9	30.3
F2410-12.0A	12	65	UL 50A 65VAC/DC	4.8	42.221
F2410-15.0A	15	65		3.7	69.753
F2410-20.0A	20	65		3	132

* Measured at≤10% rated current and 25 °C

** Melting I^2T at 10 times of rated current

Catalog Symbol

F 2410–1.0A

- **“1.0A” Ampere Rating: 1A**
- **“2410” Size Numbe**
- **“F” Electrical Characteristic: F = Fast acting**

Dimensions

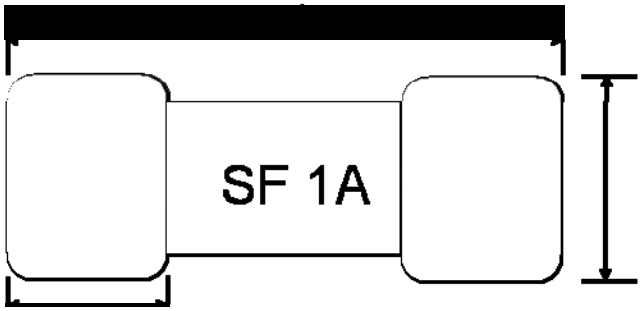

Unit:mm

L	W	t	D
6.1±0.2	2.5±0.1	2.5±0.1	1.4±0.1

Recommended Land Patterns

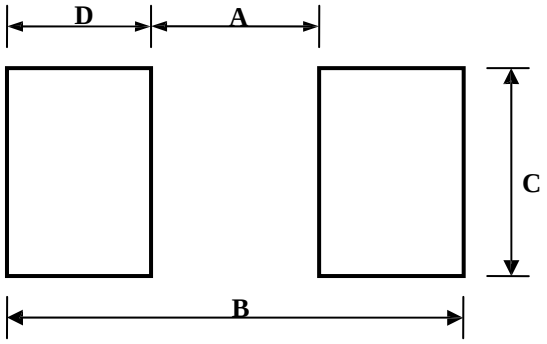

Dimensions	A	B	C	D
Spec	3.0±0.3	8.0±0.3	3.0±0.3	2.5±0.3

Unit:mm

Materials

Components	Material
Body	Ceramic
Terminations	Au Plated Brass Cap
Element	Silver Plated or Copper Alloy wire

Time Current Curve

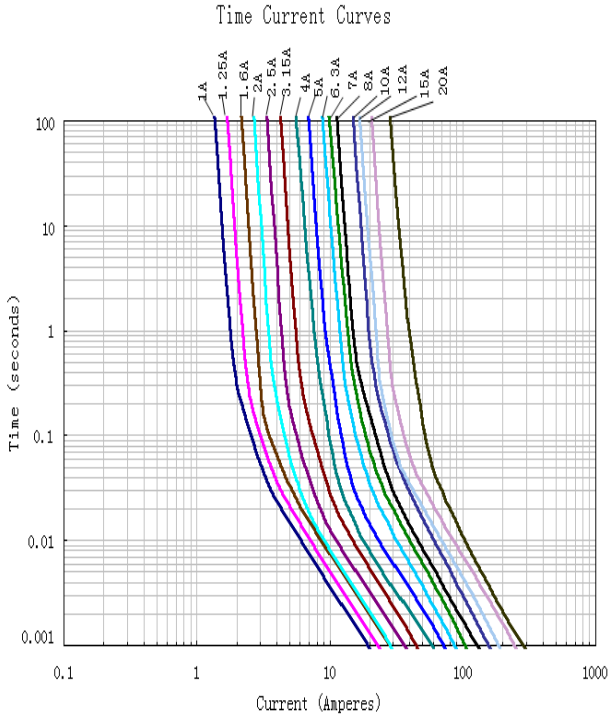

I^2T vs Time Curve

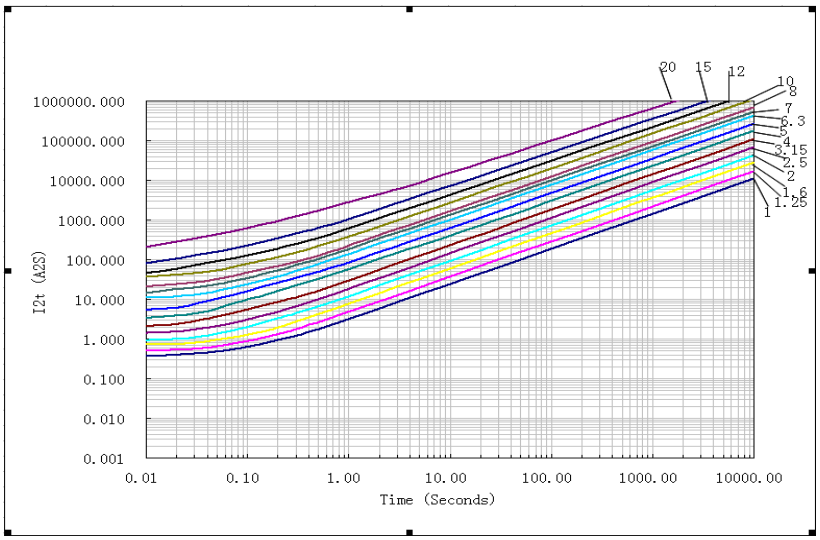

Electrical Characteristics

Ampere Rating	% of Current Rating	Opening Time
1A-20A	100%	Min.4hr.
1A-10A	200%	Max.5s
12A - 20A	200%	Max.20s

Temperature Derating Curve

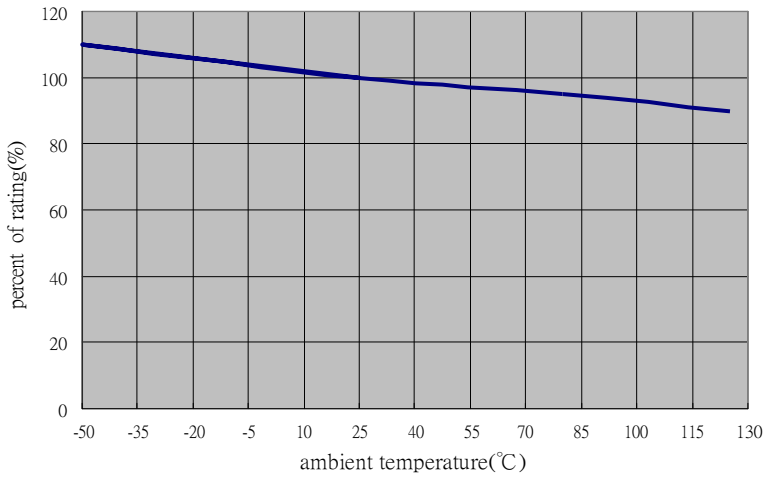

Reliability Test

Item	Test condition / Methods	Performance	Standard
Carrying capacity	100% of its rated current	No Fusing，4hr min	UL248-14
Fusing Time	200% of its rated current	1~10A < 5 s 12~20A < 20 s	Refer to SinoChip File
Fusing Time	1000% of its rated current	1ms-10ms	IEC60127-4
Voltage Drop	100% of its rated current	1-6.3A<300mv 7-10A<220mv 12A-20A<150mv	IEC-60127-4
Endurance Test	UL:100% of its rated current PSE: 125% of its rated current	1-6.3A<70K 7-10A<85K 12-20A<105K	IEC-60127-4 UL248-14
Interrupting Ability	UL 50A@125V AC160V DC 50A@ 65VAC/DC	without permanent arcing,ignition and bursting of fuse link	UL248-14 IEC60127-4
Solderability	240°C±5 ℃,3s±0.5s	95% coverage min	IEC60127-4 IEC60068-2-20; MIL-STD-202
Resistance to soldering	260 C±5℃，10s±0.5s	△R:<10%	MIL-STD-202 Method 210
High Temperature Operating Life	T=70±2℃，0.6In，96h；	△R: <10%	MIL-STD-202 Method 108
Humidity(steady state)	T=40±2℃，90～95%RH，1000h；	△R: <10%	MIL-STD-202 Method 103
Low Temperature Storage	T=-55±3℃，96 h	△R: <10%	IEC60068-2-1
High Temperature Storage	T=125±2℃，96h	△R: <10%	IEC60068-2-2
Salt Spray	5% salt solution ，48 h	△R: <10%	MIL-STD-202 Method 101
Thermal Shock	5 cycles between -55℃/+125℃, 60 minutes @each extreme	△R: <±(10%R+0.005)	IEC 60068-2-14

Recommended Solder Curve

1.Infrared Reflow:
Temperature：260℃
Time：5s max.

Recommend Reflow profile

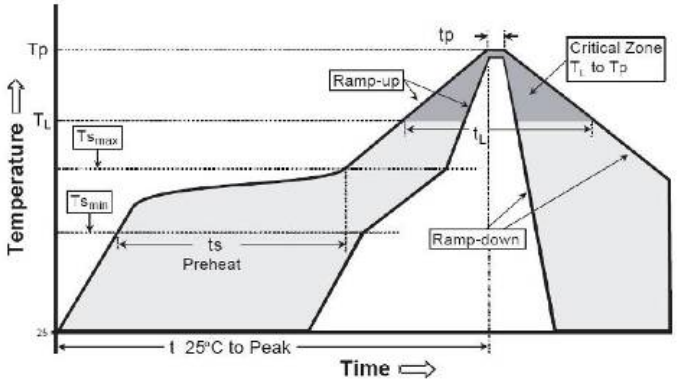

Profile Feature	Pb-Free Assembly
Average Ramp-Up Rate(Ts_{max} to Tp)	3℃/s max.
Preheat Temperature Min(Ts_{min}) Temperature Max(Ts_{max}) Time(Ts_{min} to Ts_{max})	 150℃ 200℃ 60-120s
Peak Temperature(Tp)	260℃
Time within 5℃ of actual Peak Temperature(Tp)	5s
Melting tin time(t_L)	20~40s
Ramp-Down Rate	6℃/s max.
Time 25℃ to Peak Temperature	8 minutes max.

2.Wave soldering
Reservoir Temperature：260℃
Time in Reservior：10s max.

3.Hand Soldering
Temperature：350℃
Time：5s max.

Packaging

1000 pieces of fuses in emboss taper and reeled on a 178mm(7 inch) reel

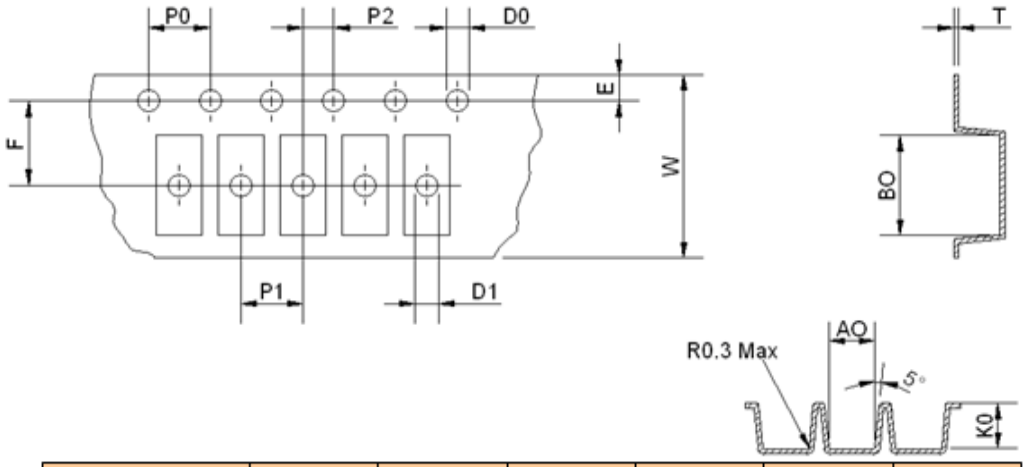

Symbol	A0	B0	K0	P0	P1	P2
Spec	3.00±0.10	6.50±0.10	3.00±0.10	4.00±0.10	4.00±0.10	2.00±0.10
Symbol	**E**	**F**	**D0**	**D1**	**W**	**T**
Spec	1.75±0.10	5.50±0.05	1.50+0.10	1.50MIN	12.0±0.20	0.30±0.05

Unit:mm

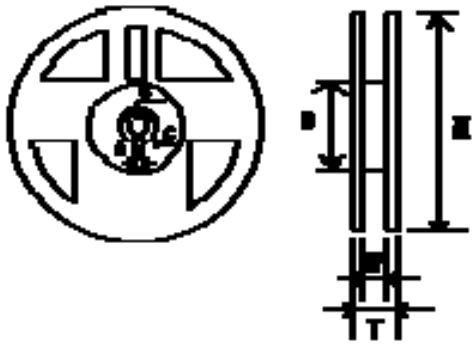

Unit:mm

Type	M	W	T	A	B	C	D
Spec	178±2.0	12.5±1.0	14.5±1.5	2.0±0.5	13.0±0.5	21.0±0.5	58.0±2.0

Storage

- **The ambient temperature shall between 5~30℃.**
- **The relative humidity recommended for storage is between 25~ 60%.**
- **Sealed plastic bags with desiccant shall be used to reduce the oxidation of the termination and shall only be opened prior to use. The products shall not be stored in areas where harmful gases containing sulfur or chlorine are present.**

AUTO fuse Series

KLS5-269 AUTO fuse Series

Material

Base / Cap: PC
Pins: Zinc Alloy
Operating Temperature: -55 ° C to +125 ° C

Features

Automotive Fuse
Many kinds of automotive fuse.
Current rating: 3A ~ 35A.
Voltage rating: 32Vdc
Excellent inrush current withstanding capability
Excellent withstand capacity for thermal and mechanic shock

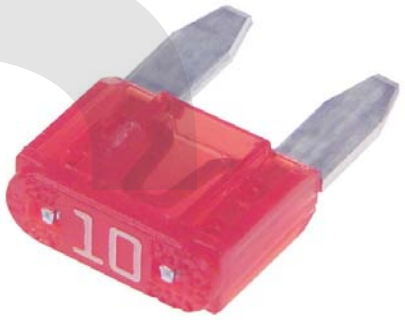

Dimension (Unit: mm)

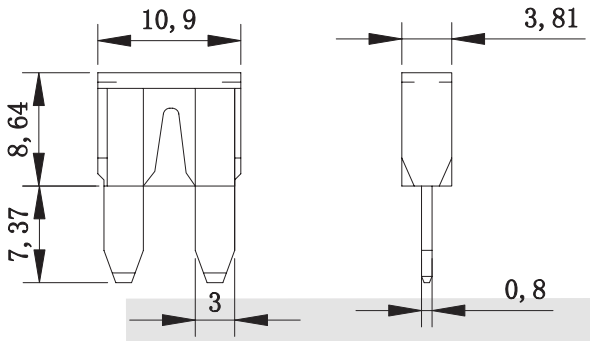

Type	Rating Current(A)	Rating Voltage(V)	Color
KLS5-269-003	3	32	purple
KLS5-269-004	4	32	Pink
KLS5-269-005	5	32	Orange
KLS5-269-008	7.5	32	tan
KLS5-269-010	10	32	red
KLS5-269-015	15	32	blue
KLS5-269-020	20	32	yellow
KLS5-269-025	25	32	natural
KLS5-269-030	30	32	green
KLS5-269-035	35	32	purplish red

Electrical Characteristics

Rating	Blowing Time
110%	4hours Min
135%	1800Sec Max
200%	5Sec Max

ORDER INFORMATION

Product NO.: KLS5-269-003-XX

Part Number
AUTO fuse Series
Rated current
Packing: A: Bulk B: Boxed C: Elevators

AUTO fuse Series

KLS5-270 AUTO fuse Series

Material

Base / Cap: PC
Pins: Zinc Alloy
Operating Temperature: -55 ° C to +125 ° C

Features

Automotive Fuse
Many kinds of automotive fuse.
Current rating: 3A ~ 40A.
Voltage rating: 32Vdc
Excellent inrush current withstanding capability
Excellent withstand capacity for thermal and mechanic shock



Dimension (Unit: mm)

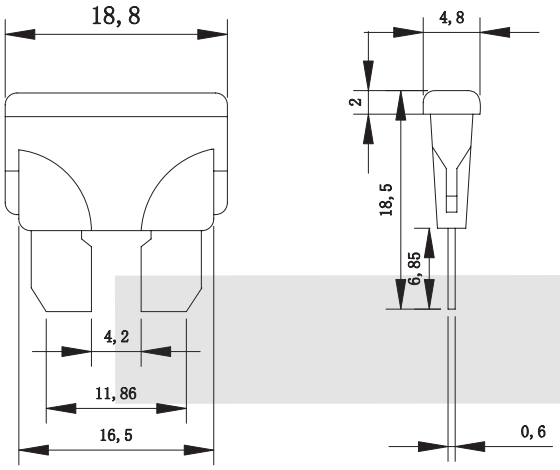

Type	Rating Current(A)	Rating Voltage(V)	Color
KLS5-270-003	3	32	purple
KLS5-270-004	4	32	Pink
KLS5-270-005	5	32	Orange
KLS5-270-008	7.5	32	tan
KLS5-270-010	10	32	red
KLS5-270-015	15	32	blue
KLS5-270-020	20	32	yellow
KLS5-270-025	25	32	natural
KLS5-270-030	30	32	green
KLS5-270-035	35	32	purplish red
KLS5-270-040	40	32	dark red

Electrical Characteristics

Rating	Blowing Time
110%	4hours Min
135%	1800Sec Max
200%	5Sec Max

ORDER INFORMATION

Product NO.: KLS5-270-003-XX

Part Number
AUTO fuse Series
Rated current
Packing: A: Bulk B: Boxed C: Elevators

Auto Plug In Fuses*ATO/ATC Fuse Holders Series

KLS5-ZH269-1



ELECTRICAL CHARACTERISTICS

RATING	BLOWING TIME
110%	4hours Min
135%	1800sec Max
200%	0.5sec Max

CHARACTERS

Type	Rating Current (A)	Rating Voltage (V)	Color
ZH269-1-003	3	32	purple
ZH269-1-004	4	32	pink
ZH269-1-005	5	32	orange
ZH269-1-008	7.5	32	tan
ZH269-1-010	10	32	red
ZH269-1-015	15	32	blue
ZH269-1-020	20	32	yellow
ZH269-1-025	25	32	natural
ZH269-1-030	30	32	green
ZH269-1-035	35	32	purplish red

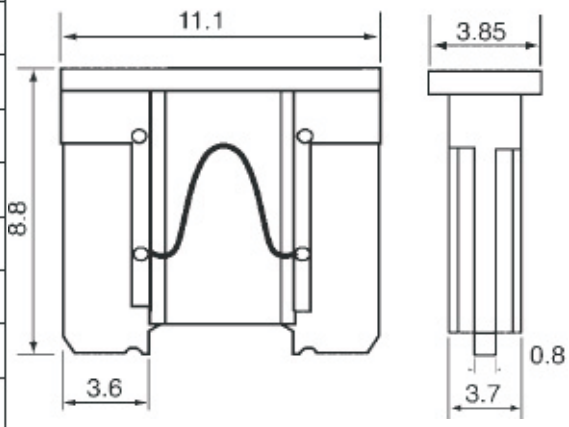

ORDER INFORMATION

Product No.: KLS5-ZH269-1

Part No.

Series No.

Auto Plug In Fuses*ATO/ATC Fuse Holders Series

KLS5-ZH271

ELECTRICAL CHARACTERISTICS

RATING	BLOWING TIME
100%	4hours Min
200%	1800sec Max
350%	5sec Max

CHARACTERS

型　号 (Type)	额定电流 (A)	额定电压 (V)	颜色标准 (Color)
ZH271-003	3	32	紫　色 purple
ZH271-004	4	32	粉红色 pink
ZH271-005	5	32	橙红色 orange
ZH271-008	7.5	32	褐　色 tan
ZH271-010	10	32	红　色 red
ZH271-015	15	32	蓝　色 blue
ZH271-020	20	32	黄　色 yellow
ZH271-025	25	32	白　　色 wite
ZH271-030	30	32	绿　色 green
ZH271-035	35	32	紫红色 purplish red
ZH271-040	40	32	深红色 dark red



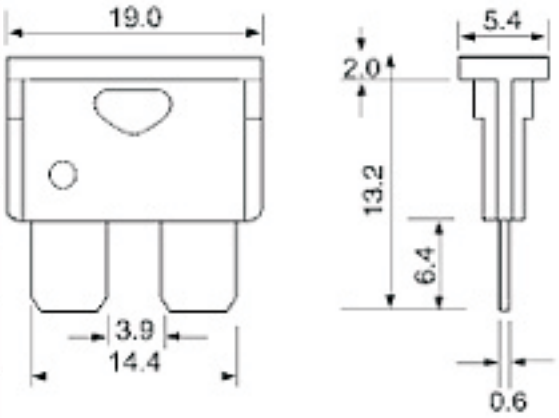

ORDER INFORMATION

Product No.: KLS5-ZH271

Part No.
Series No.

Auto Plug In Fuses*ATO/ATC Fuse Holders Series

KLS5-274-N

ELECTRICAL CHARACTERISTICS

RATING	BLOWING TIME
100%	4hours Min
200%	10sec Max
350%	0.5sec Max
Rating Voltage 32V	





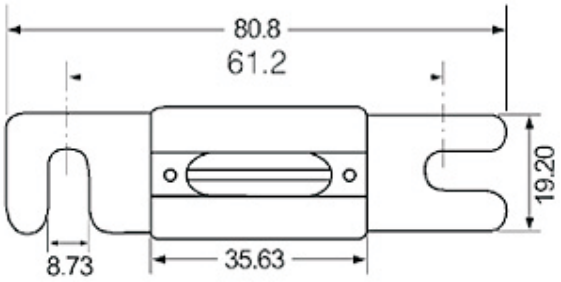

CHARACTERS

型 号 Type	额定电流 (A)	型 号 Type	额定电流 (A)
ZH274.G-080	80	ZH274.N-080	80
ZH274.G-100	100	ZH274.N-100	100
ZH274.G-130	130	ZH274.N-130	130
ZH274.G-150	150	ZH274.N-150	150
ZH274.G-180	180	ZH274.N-180	180
ZH274.G-200	200	ZH274.N-200	200
ZH274.G-250	250	ZH274.N-250	250

ORDER INFORMATION

Product No.: KLS5-ZH274-N

Part No.
Series No.
N:Nickel G:Gilded

Auto Plug In Fuses*ATO/ATC Fuse Holders Series

KLS5-ZH274-S-N

ELECTRICAL CHARACTERISTICS

RATING	BLOWING TIME
100%	4hours Min
200%	10sec Max
350%	0.5sec Max
Rating Voltage 32V	

CHARACTERIST

型 号 Type	额定电流 (A)	型 号 Type	额定电流 (A)
ZH274-S-N-030	30	ZH274-S-G-030	30
ZH274-S-N-040	40	ZH274-S-G-040	40
ZH274-S-N-050	50	ZH274-S-G-050	50
ZH274-S-N-060	60	ZH274-S-G-060	60
ZH274-S-N-080	80	ZH274-S-G-080	80
ZH274-S-N-100	100	ZH274-S-G-100	100
ZH274-S-N-130	125	ZH274-S-G-130	125
ZH274-S-N-150	150	ZH274-S-G-150	150
ZH274-S-N-180	175	ZH274-S-G-180	175
ZH274-S-N-200	200	ZH274-S-G-200	200

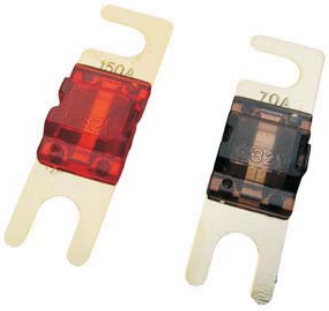

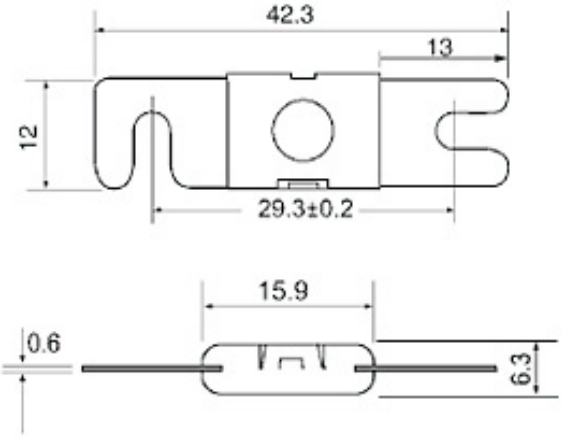

ORDER INFORMATION

Product No.: KLS5-ZH274-S-N

- Part No.
- Series No.
- N:Nickel G:Gilded

Fuse holder Series



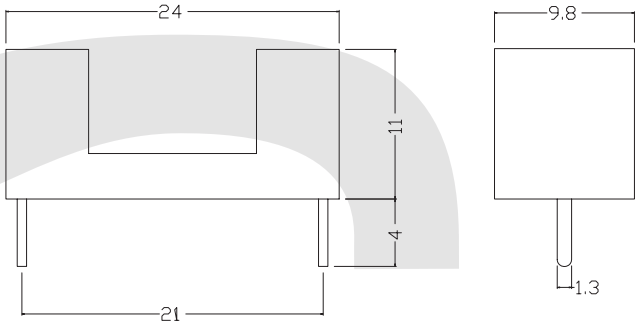

KLS5-242

Suitable fuse:ø5.2×20mm
Maximum rated value:6A.250V.AC
Holder:High temperature resisting flame-retarded plastic
Clip pole:Silver-plating brass

Fuse holder Series



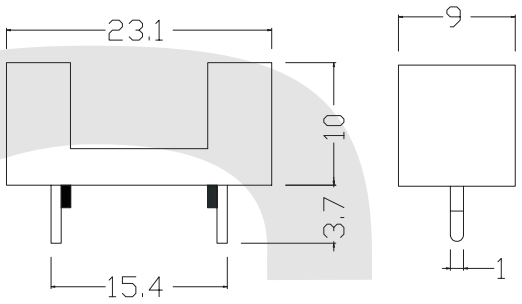

KLS5-1098

Suitable fuse:ø5.2×20mm
Maximum rated value:6A.250V.AC
Holder:High temperature resisting flame-retarded plastic
Clip pole:Silver-plating brass

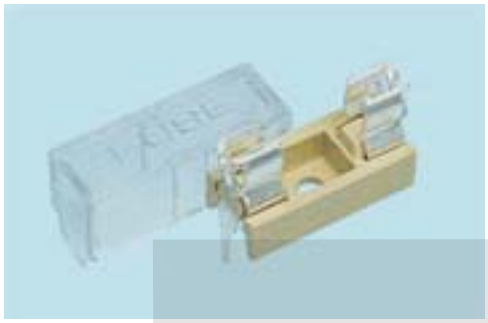

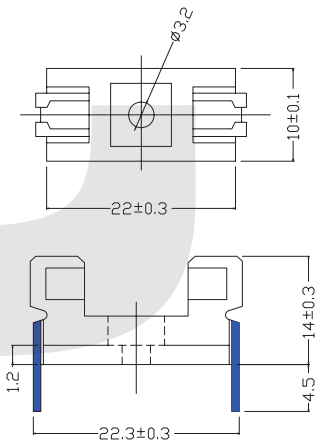

KLS5-243

Suitable fuse:ø5.2×20mm
Maximum rated value:6A.250V.AC
Holder:High temperature resisting flame-retarded plastic
Clip pole:Silver-plating brass

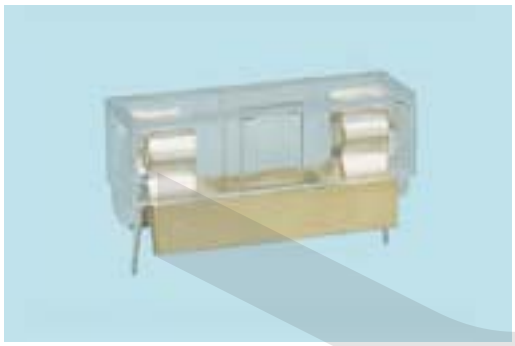

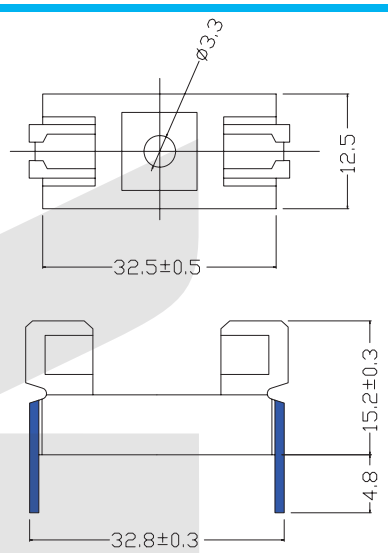

KLS5-244

Suitable fuse:ø6.35 x 30mm
Maximum rated value:6A.250V.AC
Holder:High temperature resisting flame-retarded plastic
Clip pole:Silver-plating brass

Fuse holder Series



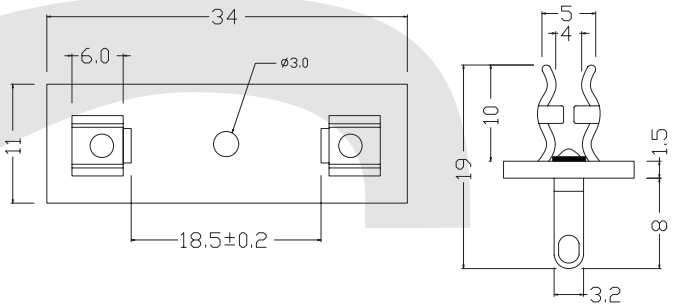

KLS5-249

Suitable fuse:ø6.35×30mm
Maximum rated value:6A.250V.AC
Holder:Epoxy plate
Clip pole:Silver-plating brass

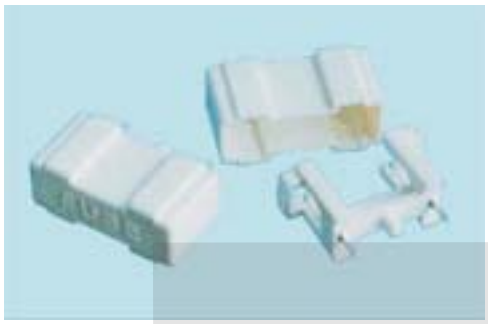

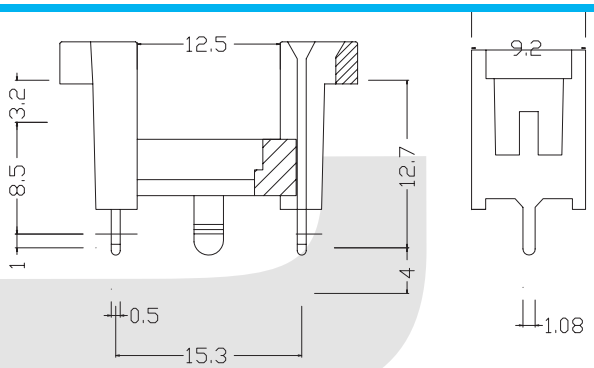

KLS5-251

Suitable fuse:ø5.2×20mm
Maximum rated value:6A.250V.AC
Holder:High temperature resisting flame-retarded plastic
Clip pole:Silver-plating brass

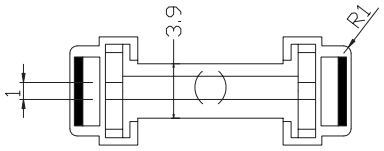



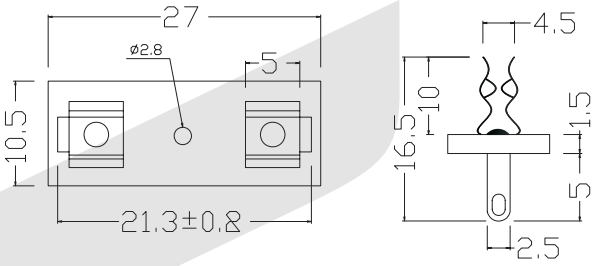

KLS5-248

Suitable fuse:ø5.2 x 20mm
Maximum rated value:6A.250V.AC
Holder:Epoxy plate
Clip pole:Silver-plating brass

Fuse holder Series



Suitable fuse:ø5.2×30mm
Maximum rated value:10A.250V.AC
Holder:High temperature resisting flame-retarded plastic
Pole:Silver-plating brass

KLS5-FH101

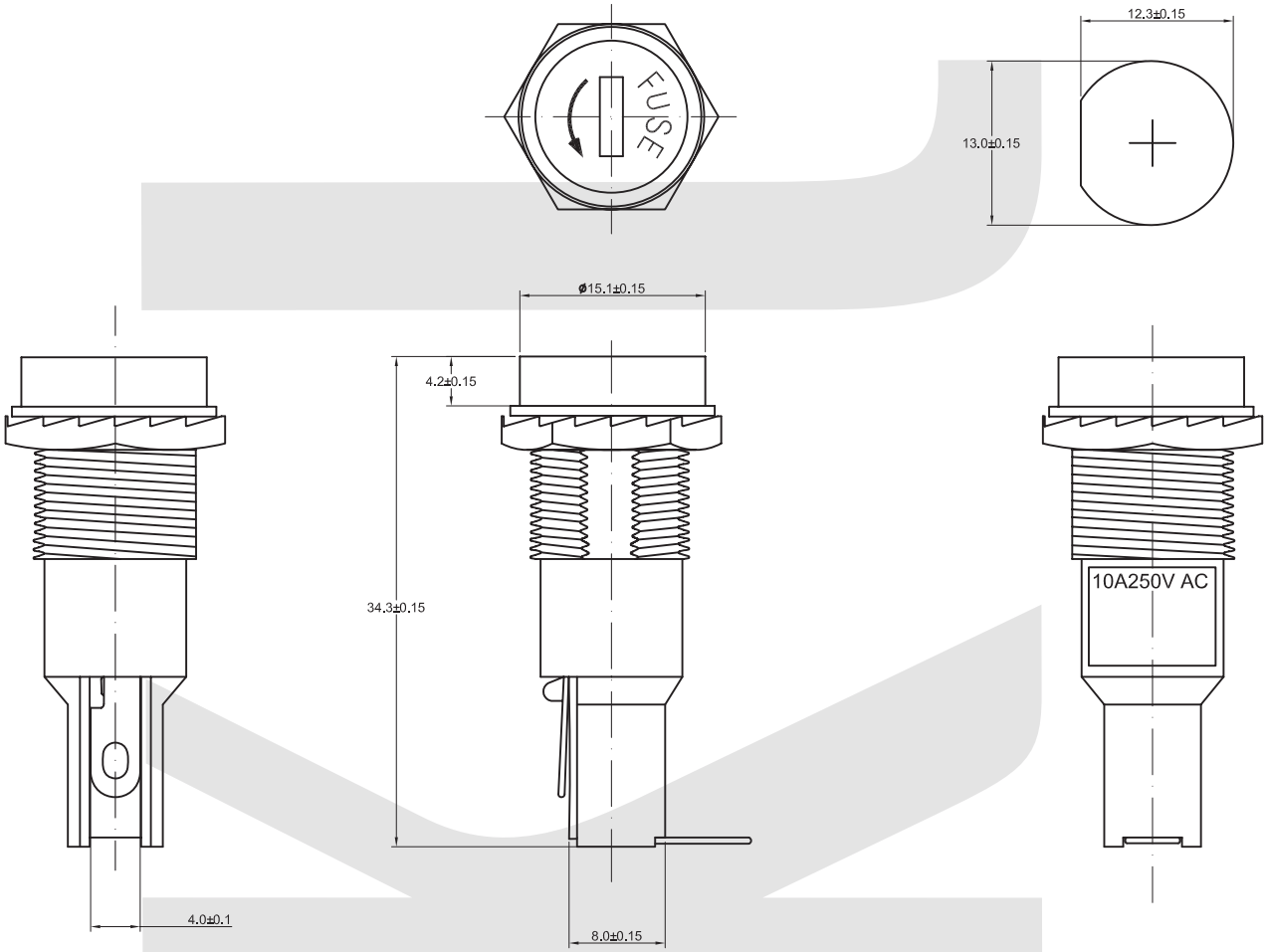

Fuse holder Series



Suitable fuse:ø6.35×30mm
Maximum rated value:15A.250V.AC
Holder:High temperature resisting flame-retarded plastic
Pole:Silver-plating brass

KLS5-FH102

Recommend hole sizes

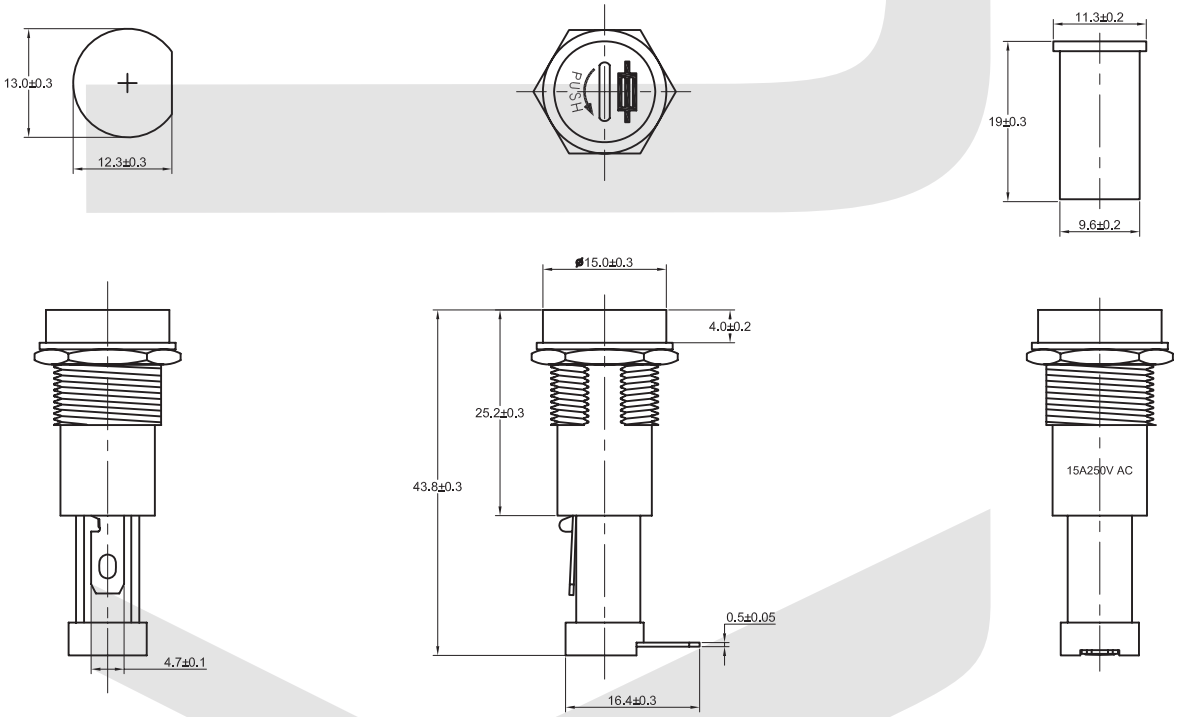

Fuse holder Series



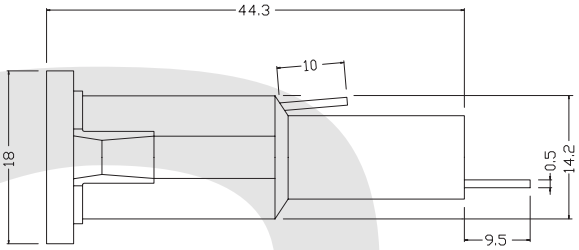

Suitable fuse:ø6.35×30mm
Maximum rated value:10A.250V.AC
Holder:High temperature resisting flame-retarded plastic
Pole:Silver-plating brass

KLS5-108



Panel-Mount Fuseholder for 10.3mmX38.1mm fuse
Electrical Ratings: 30A 600V
Insulation Body: Bakelite
Fuse Insert: Bayonet-type knob, fuse extractor type with Nickel plated copper alloy insert
Terminations: Tin plated Copper alloy with spring loaded 1 / 4 "quick connect / solder terminals

KLS5-109

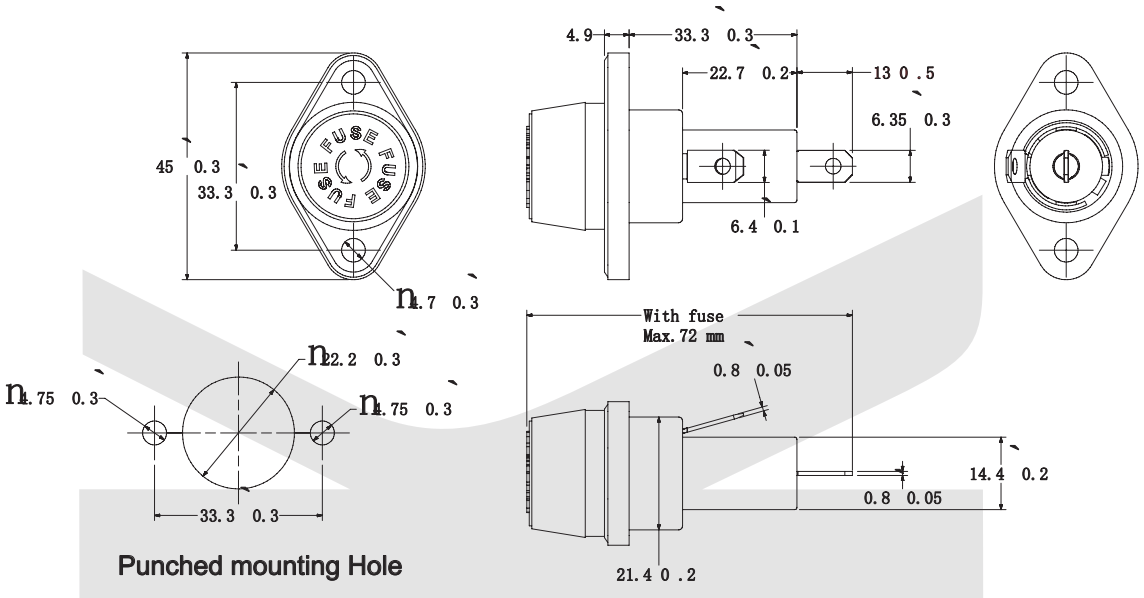

Punched mounting Hole

Fuse holder Series



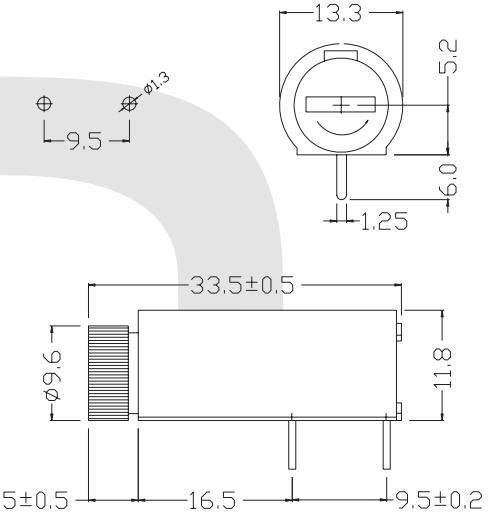

KLS5-110

Suitable fuse:ø5.2×20mm
Maximum rated value:10A.250V.AC
Holder:High temperature resisting flame-retarded plastic
Pole:Silver-plating brass



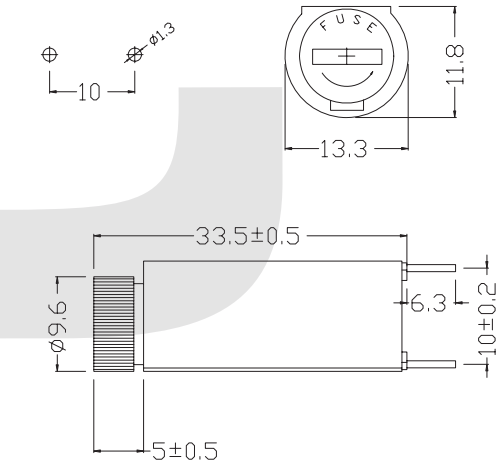

KLS5-111

Suitable fuse:ø5.2×20mm
Maximum rated value:10A.250V.AC
Holder:High temperature resisting flame-retarded plastic
Pole:Silver-plating brass

Fuse holder Series



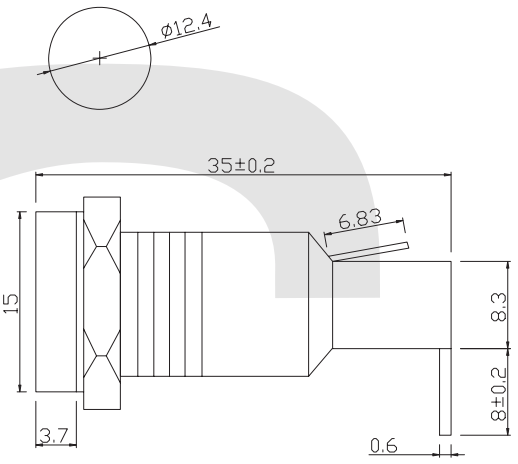

KLS5-258

Suitable fuse:5.2×20mm
Maximum rated value:15A.250V.AC
Casing:High temperature resisting flame-retarded plastic
Pole:Silver-plating brass



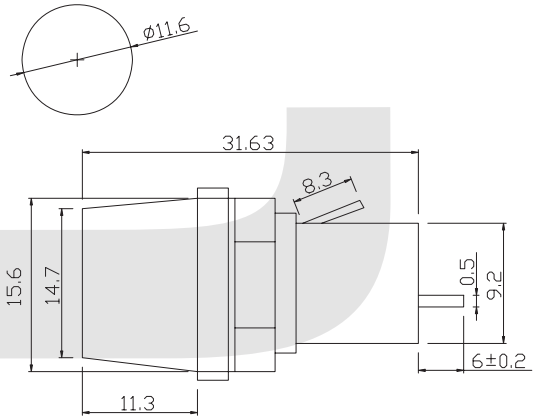

KLS5-259

Suitable fuse:5.2×20mm
Maximum rated value:30A.250V.AC
Casing:Bakelite
Pole:Silver-plating brass



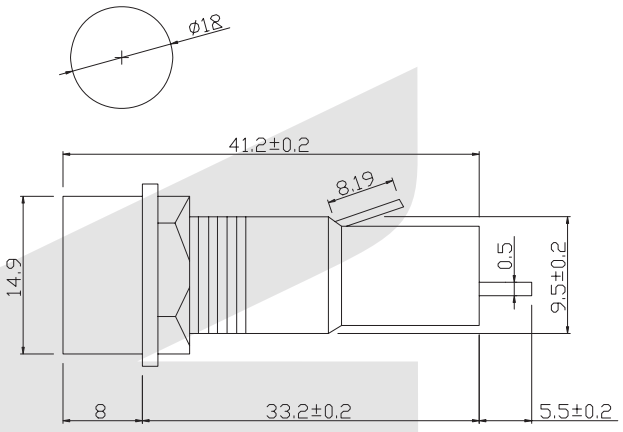

KLS5-260

Suitable fuse:5.2×20mm
Maximum rated value:30A.250V.AC
Casing:Bakelite
Pole:Silver-plating brass

Fuse holder Series



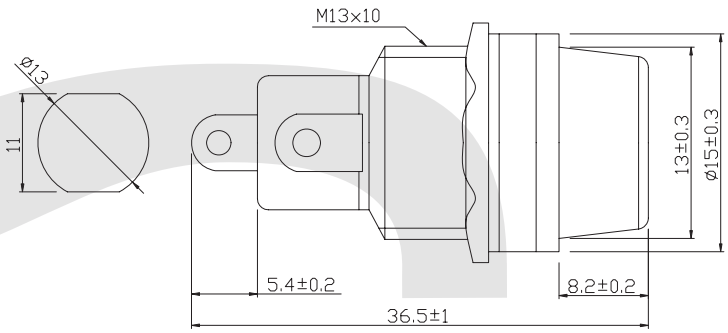

KLS5-254

Suitable fuse:ø5.2×20mm
Maximum rated value:10A.250V.AC
Casing:High temperature resisting flame-retarded plastic
Pole:Silver-plating brass



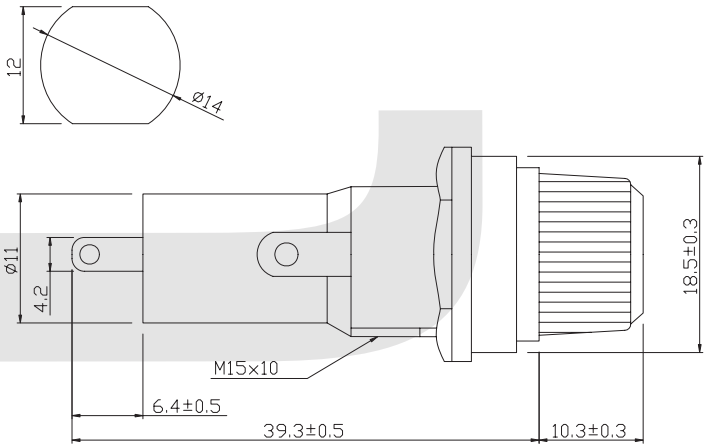

KLS5-255

Suitable fuse:6.35×30mm
Maximum rated value:6A.250V.AC
Casing:Bakelite
Pole:Silver-plating brass

Fuseholders and Clips - In-Line fuse holders



Part No: KLS5-234

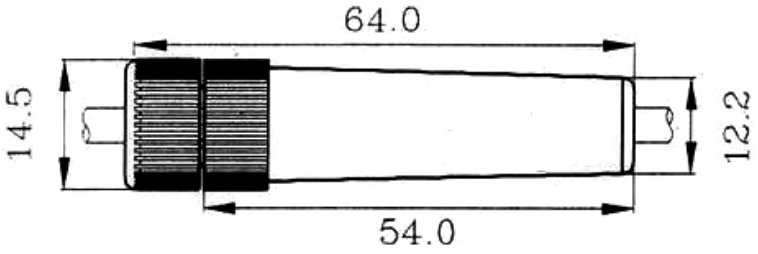

Suitable fuse:ø6.35x30mm

Description: Suitable fuse:ø6.35x32mm
Maximum rated value:15A. 250V. AC
Casing:bakelite
Pole:Silver-plating brass
Available Wire AWG:10#~20#



Part No: KLS5-235

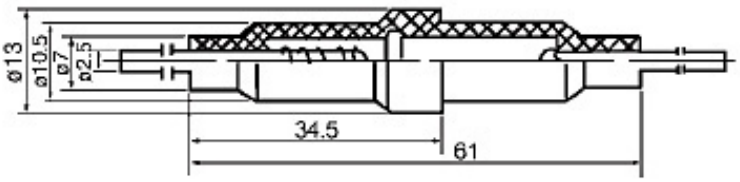

Suitable fuse:ø6.35x30mm

Description:
Suitable fuse:ø6.35x30mm
Maximum rated value:15A. 250V. AC
Casing:bakelite
Pole:Silver-plating brass
Available Wire AWG:12#~22# (Please specify wire gauge. Spring, terminal and wire are available on request.)



Part No: KLS5-236

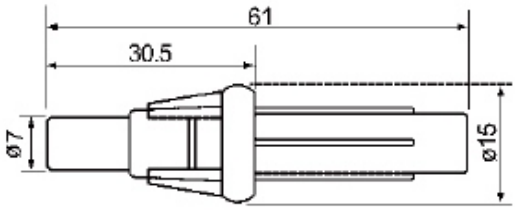

Suitable fuse:ø6.35x30mm

Description:
Suitable fuse:ø6.35x30mm
Maximum rated value:10A. 250V. AC
Casing:nylon
Pole:Silver-plating brass
Available Wire AWG:12#~22# (Please specify wire gauge. Spring, terminal and wire are available on request.)



Part No: KLS5-237

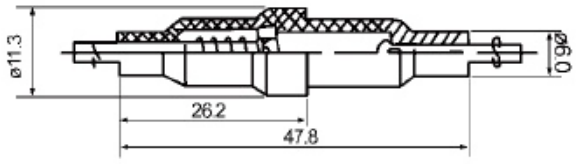

Suitable fuse:ø5.2x20mm

Description:
Suitable fuse:ø5.2x20mm
Maximum rated value:10A. 250V. AC
Casing:bakelite
Pole:Silver-plating brass
Available Wire AWG:18#~20# (Please specify wire gauge. Spring, terminal and wire are available on request.)

Fuseholders and Clips - In-Line fuse holders



Part No: KLS5-230

Blade fuse holder In-Line series



Part No: KLS5-707

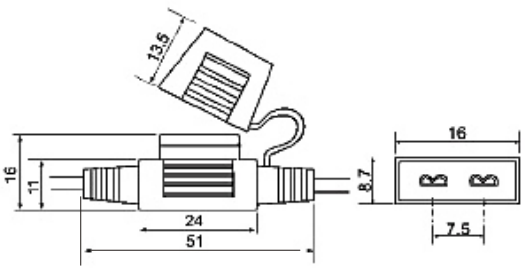

Suitable fuse:Mini auto plug-in sheet fuse

Description:

Feature Water Splashproof type
Applicable For ATS (Mini) blade fuse
Electrical Rated for currents up to 30A
Insulating Body PVC
Contacts Brass
Note Custom wire length and wire AWG 12#~20# are available.
Please specify wire gauge. Spring, terminal and wire are available on request

---



Part No: KLS5-708B

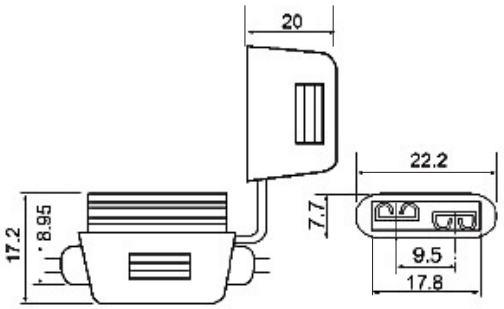

Description:

Suitable fuse:Medium auto plug-in sheet fuse

Feature Water Splashproof type
Applicable For ATC blade fuse
Electrical Rated for currents up to 30A
Insulating Body PVC
Contacts Brass
Note Custom wire length and wire AWG 12#~20# are available.
Please specify wire gauge. Spring, terminal and wire are available on request

---



Part No: KLS5-709

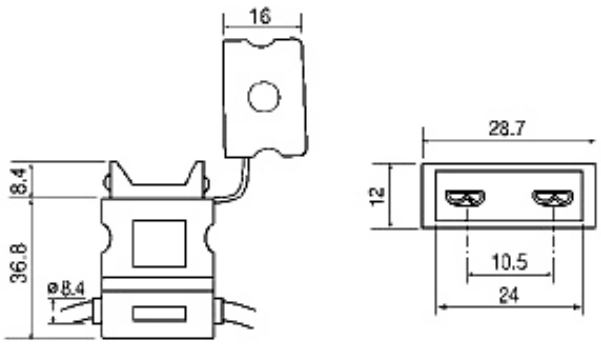

Description:

Suitable fuse:Medium auto plug-in sheet fuse

Feature Water Splashproof type
Applicable For ATC blade fuse
Electrical Rated for currents up to 30A
Insulating Body PVC
Contacts Brass
Note Custom wire length and wire AWG 10#~20# are available.
Please specify wire gauge. Spring, terminal and wire are available on request

Blade fuse holder In-Line series



Part No: KLS5-713

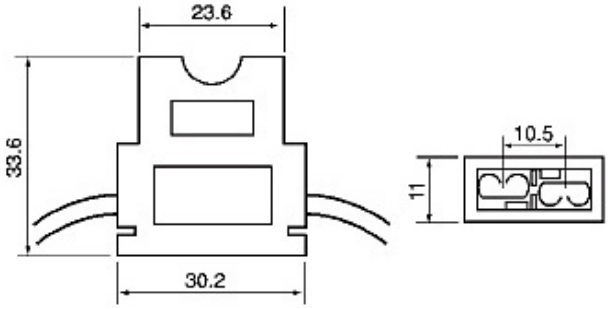

Suitable fuse:Mini auto plug-in sheet fuse

Description:

Feature Water Splashproof type
Applicable For ATC blade fuse
Electrical Rated for currents up to 30A
Insulating Body PVC
Contacts Brass
Note Custom wire length and wire AWG 12#~20# are available.
Please specify wire gauge. Spring, terminal and wire are available on request

---



Part No: KLS5-713B

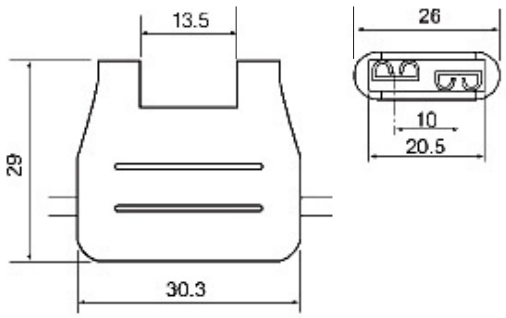

Suitable fuse:Medium auto plug-in sheet fuse

Description:

Applicable For ATC blade fuse
Electrical Rated for currents up to 30A insulated wire for rated 3A to 30A
Insulating Body Nylon
Contacts Brass
Note Custom wire length and wire AWG 10#~20# are available.
Please specify wire gauge. Spring, terminal and wire are available on request

---



Part No: KLS5-714

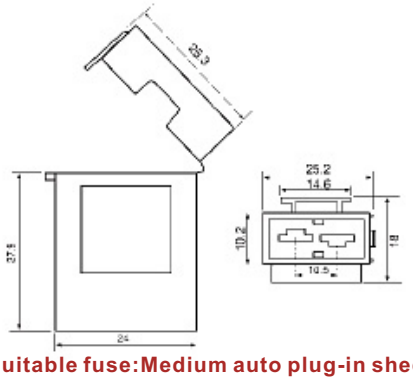

Suitable fuse:Medium auto plug-in sheet fuse

Description:

Applicable For ATC blade fuse
Electrical Rated for currents up to 30A
Insulating Body Black Nylon (U type)
Contacts Brass
Note Custom wire length and wire AWG 10#~20# are available.
Please specify wire gauge. Spring, terminal and wire are available on request.

Blade fuse holder



Part No:KLS5-718B

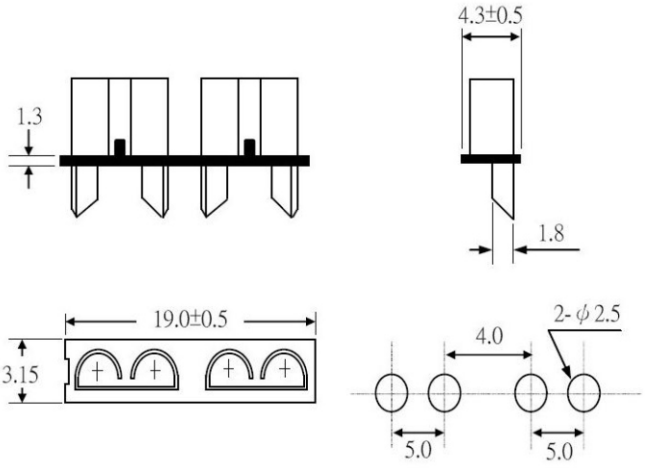

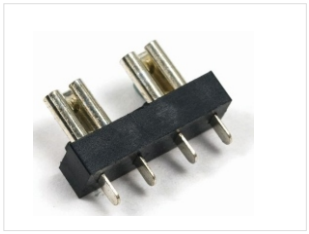

Part No:KLS5-717B

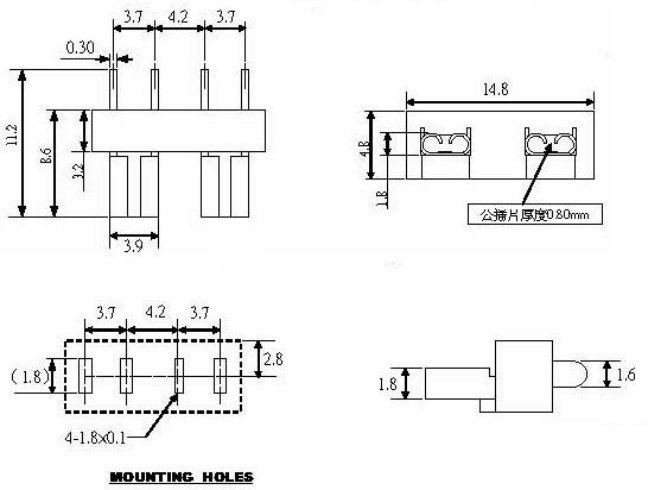



Part No:KLS5-701

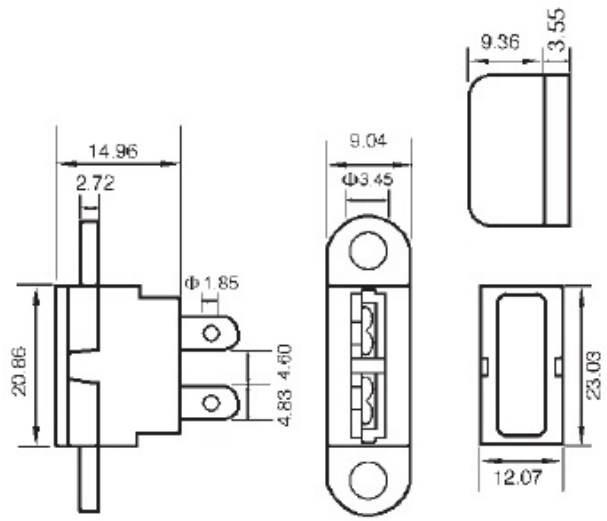

Blade fuse holder



Part No:KLS5-706

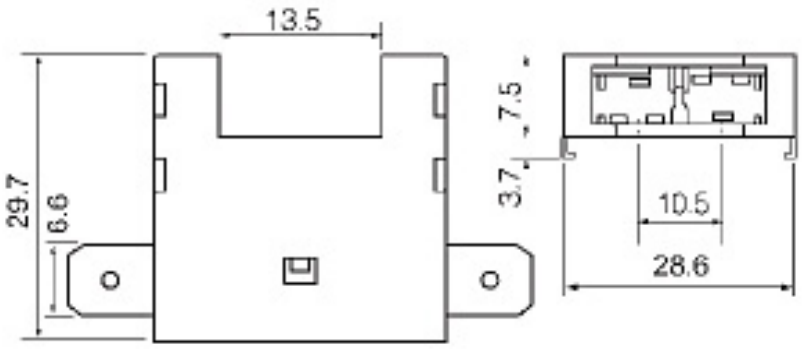

V

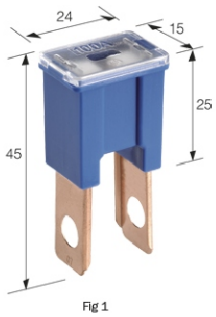

Part No:KLS5-228M

Appliance Lamp Holder	Rated Carrent	Color Criterion
KLS5-228-M-20A	20	white
KLS5-228-M-30A	30	pink
KLS5-228-M-40A	40	green
KLS5-228-M-50A	50	red
KLS5-228-M-60A	60	yellow
KLS5-228-M-70A	70	brown
KLS5-228-M-80A	80	black
KLS5-228-M-100A	100	blue
KLS5-228-M-100A	100	blue

Blade fuse holder In-Line series



Part No: KLS5-266

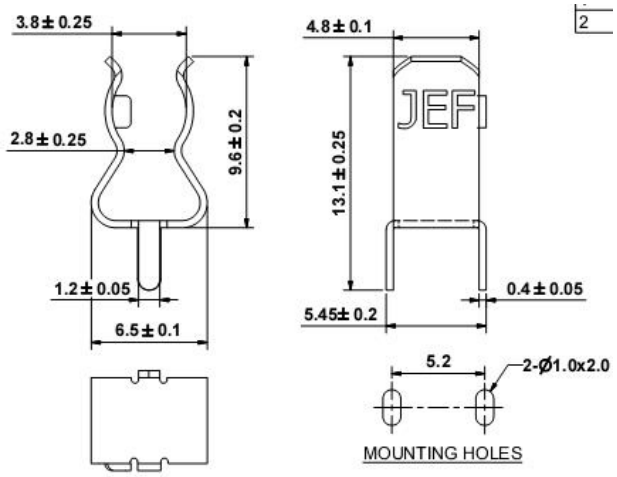

Description:

Suitable fuse:5.2×20mm
Maximum rated value:10A.250V.AC
Material:Silver-plating(nickel-plating)copper(spring copper)



Part No: KLS5-267

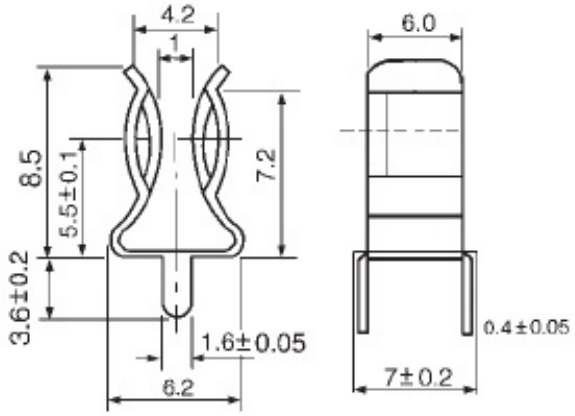

Description:

Suitable fuse:5.2×20mm
Maximum rated value:10A.250V.AC
Material:Silver-plating(nickel-plating)copper(spring copper)



Part No: KLS5-001

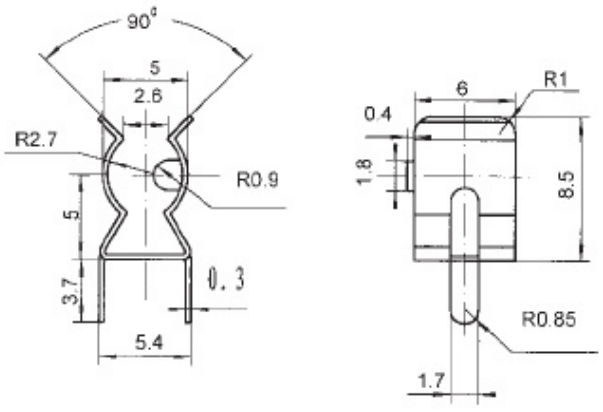

Description:

Suitable fuse:5.2×20mm
Maximum rated value:10A.250V.AC
Material:Silver-plating(nickel-plating)copper(spring copper)

Blade fuse holder In-Line series



Part No: KLS5-268

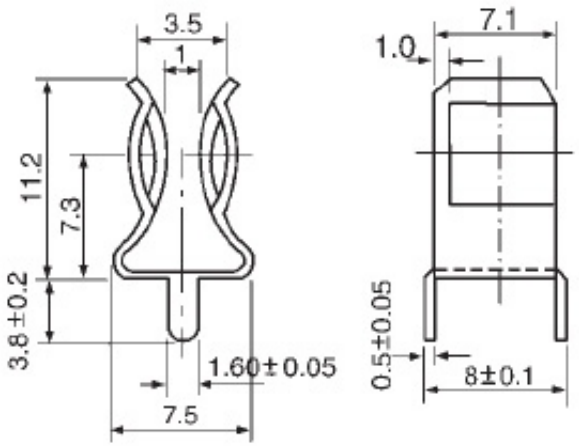

Description:

Suitable fuse:6.35×30mm
Maximum rated value:15A.250V.AC
Meterial:Silver-plating(nickel-plating)copper(spring copper)

Auto Plug In Fuses*ATO/ATC Fuse Holders Series

KLS5-231-2

2GA/4GA X 1 IN OR 3 IN
8GA X 2 OUT
USE 5AG FUSE
CLEAR HOUSING
24KT.GOLD PLATED



Order Information

Product No.: KLS5-231-2

Part No.
Series No.

Auto Plug In Fuses*ATO/ATC Fuse Holders Series

KLS5-231-4

KLS5-231-3
0GA/4GA X 3 IN
8GA X 3 OUT
USE 5AG FUSE
CLEAR HOUSING
24KT.GOLD PLATED

KLS5-231-4
0GA/4GA X 3 IN
8GA X 4 OUT
USE 5AG FUSE
CLEAR HOUSING
NICKEL PLATED





Order Information

Product No.: KLS5-231-4

Part No.
Series No.

Thermal Fuse Series

KLS5-103 Steel-type Thermal Fuse Series

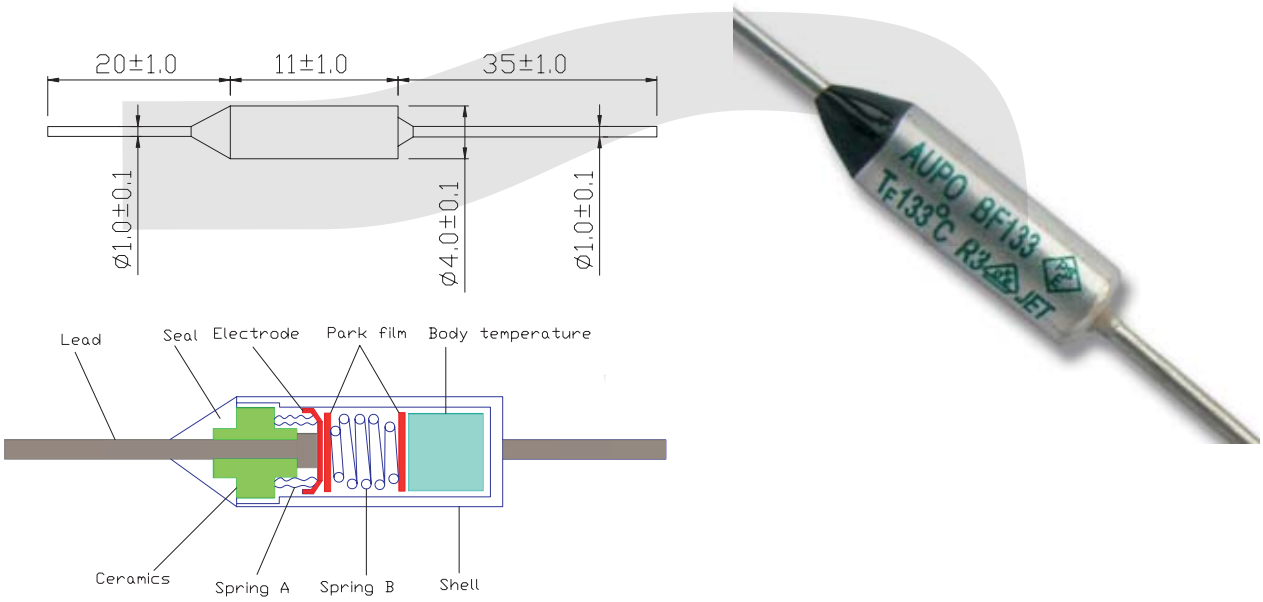

Rated functioning temperature(Tf): The temperature at which a Thermal Cutoff changes its state of conductivity to open circuit detection curret.The tolerance according to IEC60691 is from -10°C~+0°C .(With Japan Electrical Appliance and Material Law,on the other hand,they must function in the tolerance range of ±7°C).

Fusing(cut)-off temperature: The fusing-off temperature indicates value measured in silicon oil with a temperature increased by 0.5-1°C per minute and a detective current 100mA or less.

Holding temperature(Th): The maximum temperature at which a thermal Cutoff will not cause a change in state of conductivity to open circuit while conducting rated current for 168 hours. This rating is required by safety standards based on IEC60691.

Maximum temperature limit(Tm): The maximum temperature at which a Thermal Cutoff can be maimtained for 10 minutes without reclosing.This rating is requirde by safety standards based on IEC60691.

Rated current(Ir): The allowable maximum current which a Thermal Cutoff is able to carry.

Rated current(Ur): The allowable maximum voltage which a Thermal Cutoff is able to be applied.

ORDER INFORMATION

Product No.: KLS5-103-BF XXX

- KLS5-103-BF: Steel-type Thermal Fuse Series
- XXX: Rated functioning temp

Fuse holder Series

KLS5-103 Steel-type Thermal Fuse Series

AUPO BF Series											
New Model No	Rated Functioning temp (Tf)	Fusing-off temperature	Holding Temperature (Th)	Maximum temp. limit(Tm)	Rated Current (Ir)	Rated Voltage (Ur)	Safety approval				RoHS
							UL	VDE	PSE	CCC	Compliace
BF73	73℃	70±2℃	45℃	150℃	10A	250Vac	●	●	●	●	●
BF84	84℃	82±2℃	58℃	150℃	10A	250Vac	●	●	●	●	●
BF94	94℃	93+3/-1℃	66℃	150℃	10A	250Vac	●	●	●	●	●
BF99	99℃	96±2℃	71℃	150℃	10A	250Vac	●	●	●	●	●
BF104	104℃	100±2℃	79℃	150℃	10A	250Vac	●	●	●	●	●
BF113	113℃	109+3/-1℃	84℃	150℃	10A	250Vac	●	●	●	●	●
BF117	117℃	115±2℃	92℃	160℃	10A	250Vac	●	●	●	●	●
BF121	121℃	119±2℃	94℃	160℃	10A	250Vac	●	●	●	●	●
BF133	133℃	129±2℃	104℃	160℃	10A	250Vac	●	●	●	●	●
BF142	142℃	139±2℃	114℃	160℃	10A	250Vac	●	●	●	●	●
BF157	157℃	152±2℃	127℃	172℃	10A	250Vac	●	●	●	●	●
BF172	172℃	169+3/-1℃	144℃	189℃	10A	250Vac	●	●	●	●	●
BF184	184℃	182+1/-3℃	159℃	210℃	10A	250Vac	●	●	●	●	●
BF192	192℃	188+3/-1℃	170℃	300℃	10A	250Vac	●	●	●	●	●
BF216	216℃	214+1/-3℃	191℃	380℃	10A	250Vac	●	●	●	●	●
BF229	229℃	226+3/-2℃	200℃	380℃	10A	250Vac	●	●	●	●	●
BF240	240℃	235±3	200℃	380℃	10A	250Vac	●	●	●	●	●

ORDER INFORMATION

Product No.: KLS5-103-BF XXX

- KLS5-103-BF: Steel-type Thermal Fuse Series
- XXX: Rated functioning temp

Thermal Fuse Series

KLS5-105 Porcelain tube Thermal Fuse 1A Series

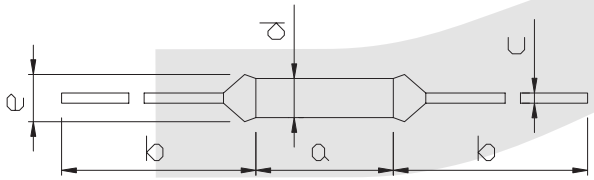



Dimension(mm)		1A Series		
a	b	c	d	e
6.5±0.5	38±0.5	ø0.54±0.05	ø2.1±0.1	2.4 or below

Rated functioning temperature(Tf): The temperature at which a Thermal Cutoff changes its state of conductivity to open circuit detection curret.The tolerance according to IEC60691 is from -10ºC~+0ºC .(With Japan Electrical Appliance and Material Law,on the other hand,they must function in the tolerance range of ±7ºC).

Fusing(cut)-off temperature: The fusing-off temperature indicates value measured in silicon oil with a temperature increased by 0.5-1ºC per minute and a detective current 100mA or less.

Holding temperature(Th): The maximum temperature at which a thermal Cutoff will not cause a change in state of conductivity to open circuit while conducting rated current for 168 hours. This rating is required by safety standards based on IEC60691.

Maximum temperature limit(Tm): The maximum temperature at which a Thermal Cutoff can be maimtained for 10 minutes without reclosing.This rating is requirde by safety standards based on IEC60691.

Rated current(Ir): The allowable maximum current which a Thermal Cutoff is able to carry.

Rated current(Ur): The allowable maximum voltage which a Thermal Cutoff is able to be applied.

ORDER INFORMATION

Product No.: KLS5- 105 - 1A X

KLS5-	105	-	1A	X
Part Number	Porcelain tube Thermal Fuse Series		Rated Current	Rated functioning temp

Fuse holder Series

KLS5-105 Porcelain tube Thermal Fuse 1A Series

105-1A Series													
Model No.	Rated Functioning temp. (Tf)	Fusing-off temperature	Holding temperature (Th)	Maximum temp. limit (Tm)	Rated current (Ir)	Rated voltage (Ur)	Safety approval						RoHS Compliace
							UL	CUL	VDE	PSE	CCC	EK	
105-1A-1	115℃	112±3℃	85℃	180℃	1A	250Vac	●	●	●	●	●	●	●
105-1A-2	125℃	120±3℃	97℃	180℃	1A	250Vac	●	●	●	●	●	●	●
105-1A-3	130℃	126±2℃	102℃	180℃	1A	250Vac	●	●	●	●	●	●	●
105-1A-4	135℃	131±3℃	105℃	180℃	1A	250Vac	●	●	●	●	●	●	●
105-1A-5	138℃	135±2℃	108℃	180℃	1A	250Vac	●	●	●	●	●	●	●
105-1A-6	150℃	145±3℃	120℃	180℃	1A	250Vac	●	●	●	●	●	●	●

ORDER INFORMATION

Product No.: KLS5- 105 - 1A X

- KLS5- : Part Number
- 105 : Porcelain tube Thermal Fuse Series
- 1A : Rated Current
- X : Rated functioning temp

Thermal Fuse Series

KLS5-105 Porcelain tube Thermal Fuse 2A Series

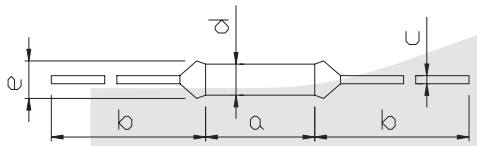



Dimension:(mm)		2A Series		
a	b	c	d	e
9.0±0.5	38±3	ø0.54±0.05	ø2.5±0.1	3.3 or below

105-2A Series													
Model No	Rated functioning temp (Tf)	Fusing-off temperature	Holding temperature (Th)	Maximum temp. limit (Tm)	Rated current (Ir)	Rated voltage	Safety approval						RoHS Compliace
							UL	CUL	VDE	PSE	CCC	EK	
105-2A-1	115℃	112±3℃	85℃	180℃	2A	250Vac	●	●	●	●	●	●	●
105-2A-2	125℃	120±3℃	97℃	180℃	2A	250Vac	●	●	●	●	●	●	●
105-2A-3	130℃	126±2℃	102℃	180℃	2A	250Vac	●	●	●	●	●	●	●
105-2A-4	135℃	131±3℃	105℃	180℃	2A	250Vac	●	●	●	●	●	●	●
105-2A-5	138℃	135±2℃	108℃	180℃	2A	250Vac	●	●	●	●	●	●	●
105-2A-6	150℃	145±3℃	120℃	180℃	2A	250Vac	●	●	●	●	●	●	●

ORDER INFORMATION

Product No.: KLS5- 105 - 2A X

- KLS5- : Part Number
- 105 : Porcelain tube Thermal Fuse Series
- 2A : Rated Current
- X : Rated functioning temp

Thermal Fuse Series

KLS5-105 Porcelain tube Thermal Fuse 3A Series

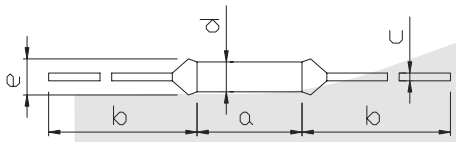



Dimension:(mm)		3A Series		
a	b	c	d	e
10.0±0.5	38±3	ø0.6±0.05	ø3.0±0.1	3.3 or below

105-3A Series													
Model No	Rated functioning temp (Tf)	Fusing-off temperature	Holding temperature (Th)	Maximum temp. limit (Tm)	Rated current (Ir)	Rated voltage (Ur)	Safety approval						RoHS Compliace
							UL	CUL	VDE	PSE	CCC		
105-3A-1	84℃	82±2℃	55℃	180℃	3A	250Vac	●	●	●	●	●		●
105-3A-2	115℃	112±3℃	75℃	180℃	3A	250Vac	●	●	●	●	●		●
105-3A-3	125℃	120±3℃	85℃	180℃	3A	250Vac	●	●	●	●	●		●
105-3A-4	130℃	126±2℃	90℃	180℃	3A	250Vac	●	●	●	●	●		●
105-3A-5	135℃	131±3℃	90℃	180℃	3A	250Vac	●	●	●	●	●		●
105-3A-6	138℃	135±2℃	95℃	180℃	3A	250Vac	●	●	●	●	●		●
105-3A-7	150℃	145±3℃	105℃	180℃	3A	250Vac	●	●	●	●	●		●

ORDER INFORMATION

Product No.: KLS5- 105 - 3A X

- KLS5- : Part Number
- 105 : Porcelain tube Thermal Fuse Series
- 3A : Rated Current
- X : Rated functioning temp

Thermal Fuse Series

KLS5-105 Porcelain tube Thermal Fuse 5A Series

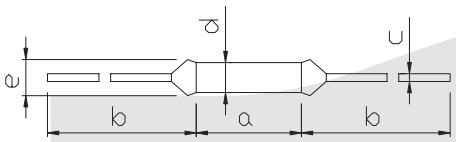



Dimension:(mm)		5A Series		
a	b	c	d	e
11.5±0.5	38±3	ø0.6±0.02	ø3.3±0.2	3.6 or below

105-5A Series

Model No	Rated functioning temp (Tf)	Fusing-off temperature	Holding temperature (Th)	Maximum temp. limit (Tm)	Rated current (Ir)	Rated voltage (Ur)	Safety approval						RoHS Compliace
							UL	CUL	VDE	PSE	CCC		
105-5A-1	84℃	82±2℃	55℃	180℃	5A	250Vac	●	●	●	●	●		●
105-5A-2	115℃	112±3℃	75℃	180℃	5A	250Vac	●	●	●	●	●		●
105-5A-3	125℃	120±3℃	85℃	180℃	5A	250Vac	●	●	●	●	●		●
105-5A-4	130℃	126±2℃	90℃	180℃	5A	250Vac	●	●	●	●	●		●
105-5A-5	135℃	131±3℃	90℃	180℃	5A	250Vac	●	●	●	●	●		●
105-5A-6	138℃	135±2℃	95℃	180℃	5A	250Vac	●	●	●	●	●		●
105-5A-7	150℃	145±3℃	105℃	180℃	5A	250Vac	●	●	●	●	●		●

ORDER INFORMATION

Product No.: KLS5- 105 - 5A X

- KLS5- : Part Number
- 105 : Porcelain tube Thermal Fuse Series
- 5A : Rated Current
- X : Rated functioning temp

Thermal Fuse Series

KLS5-104 Side shell Thermal Fuse 1A Series

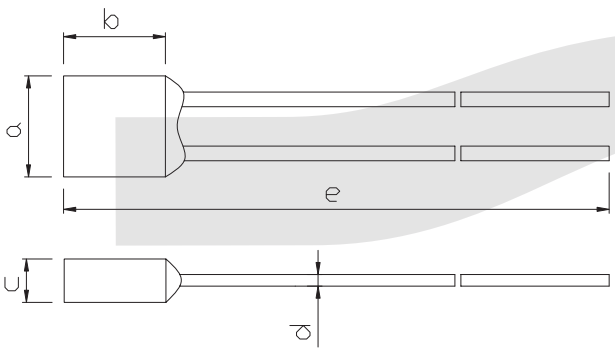



Dimension(mm)		1A Series		
a	b	c	d	e
5.2±0.5	4.0±0.5	2.2±0.2	ø0.5±0.02	60

Rated functioning temperature(Tf): The temperature at which a Thermal Cutoff changes its state of conductivity to open circuit detection curret.The tolerance according to IEC60691 is from -10ºC~+0ºC .(With Japan Electrical Appliance and Material Law,on the other hand,they must function in the tolerance range of ±7ºC).

Fusing(cut)-off temperature: The fusing-off temperature indicates value measured in silicon oil with a temperature increased by 0.5-1ºC per minute and a detective current 100mA or less.

Holding temperature(Th): The maximum temperature at which a thermal Cutoff will not cause a change in state of conductivity to open circuit while conducting rated current for 168 hours. This rating is required by safety standards based on IEC60691.

Maximum temperature limit(Tm): The maximum temperature at which a Thermal Cutoff can be maimtained for 10 minutes without reclosing.This rating is requirde by safety standards based on IEC60691.

Rated current(Ir): The allowable maximum current which a Thermal Cutoff is able to carry.

Rated current(Ur): The allowable maximum voltage which a Thermal Cutoff is able to be applied.

ORDER INFORMATION

Product No.: KLS5- 104 - 1A X

Part Number	Side shell Thermal Fuse Series	Rated Current	Rated functioning temp

Fuse holder Series

KLS5-104 Side shell Thermal Fuse 1A Series

104-1A Series												
Model No	Rated functioning temp. (Tf)	Fusing-off temperature	Holding temperature (Th)	Maximum temp. limit (Tm)	Rated current (Ir)	Rated voltage (Ur)	Safety approval					RoHS Compliace
							UL	CUL	VDE	PSE	CCC	
104-1A-1	102℃	98±2℃	76℃	180℃	1A	250Vac	●	●	●	●	●	●
104-1A-2	115℃	112±3℃	85℃	180℃	1A	250Vac	●	●	●	●	●	●
104-1A-3	125℃	120±3℃	97℃	180℃	1A	250Vac	●	●	●	●	●	●
104-1A-4	130℃	126±2℃	102℃	180℃	1A	250Vac	●	●	●	●	●	●
104-1A-5	135℃	131±3℃	105℃	180℃	1A	250Vac	●	●	●	●	●	●
104-1A-6	138℃	135±2℃	108℃	180℃	1A	250Vac	●	●	●	●	●	●
104-1A-7	150℃	145±3℃	120℃	180℃	1A	250Vac	●	●	●	●	●	●

ORDER INFORMATION

Product No.: KLS5- 104 - 1A X

- KLS5- : Part Number
- 104 : Side shell Thermal Fuse Series
- 1A : Rated Current
- X : Rated functioning temp

Thermal Fuse Series

KLS5-104 Side shell Thermal Fuse 2A Series

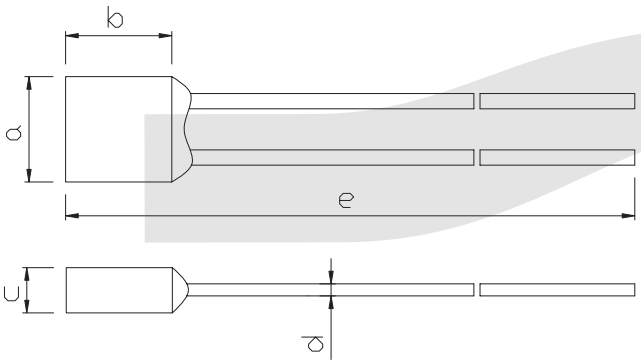

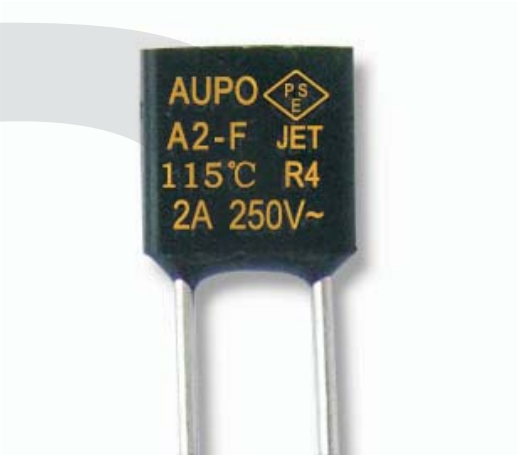

Dimension(mm)		2A Series		
a	b	c	d	e
5.5±0.5	6.0±0.5	2.4±0.3	ø0.5±0.02	60

2A Series													
Model No.	Rated functioning temp. (Tf)	Fusing-off temperature	Holding temperature (Th)	Maximum temp. Limit (Tm)	Rated current	Rated voltage	Safety approval						RoHS Compliace
					(Ir)	(Ur)	UL	CUL	VDE	TUV	PSE	CCC	
104-2A-1	102℃	98±2℃	79℃	203℃	2A	250V	●	●	●	●	●	●	●
104-2A-2	115℃	112±3℃	92℃	203℃	2A	250V	●	●	●	●	●	●	●
104-2A-3	125℃	120±3℃	101℃	203℃	2A	250V	●	●	●	●	●	●	●
104-2A-4	130℃	126±2℃	107℃	203℃	2A	250V	●	●	●	●	●	●	●
104-2A-5	135℃	131±3℃	112℃	203℃	2A	250V	●	●	●	●	●	●	●
104-2A-6	138℃	135±2℃	115℃	203℃	2A	250V	●	●	●	●	●	●	●
104-2A-7	150℃	145±3℃	126℃	203℃	2A	250V	●	●	●	●	●	●	●

ORDER INFORMATION

Product No.: KLS5- 104 - 2A X

- KLS5- : Part Number
- 104 : Side shell Thermal Fuse Series
- 2A : Rated Current
- X : Rated functioning temp

Thermal Fuse Series

KLS5-104 Side shell Thermal Fuse 3A Series

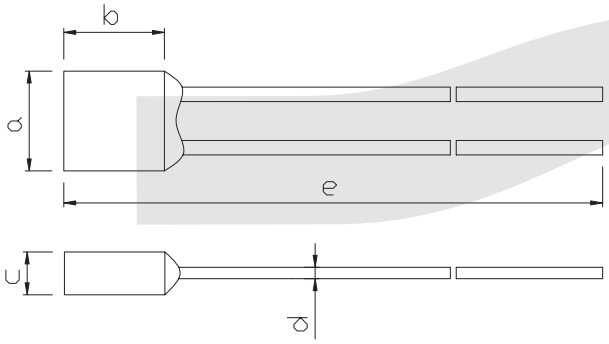



Dimension(mm)		3A Series		
a	b	c	d	e
6.6±0.5	8.0±0.5	2.5±0.3	ø0.6±0.02	60

104-3A Series												
Model No.	Rated functioning temp. (Tf)	Fusing-off temperature	Holding temperature (Th)	Maximum temp. Limit (Tm)	Rated current	Rated voltage	Safety approval					RoHS Compliace
					(Ir)	(Ur)	UL	CUL	VDE	PSE	CCC	
104-3A-1	84℃	82±2℃	40℃	180℃	3A	250Vac	●	●	●	●	●	●
104-3A-2	102℃	98±2℃	63℃	180℃	3A	250Vac	●	●	●	●	●	●
104-3A-3	115℃	112±3℃	75℃	180℃	3A	250Vac	●	●	●	●	●	●
104-3A-4	125℃	120±3℃	85℃	180℃	3A	250Vac	●	●	●	●	●	●
104-3A-5	130℃	126±2℃	90℃	180℃	3A	250Vac	●	●	●	●	●	●
104-3A-6	135℃	131±3℃	90℃	180℃	3A	250Vac	●	●	●	●	●	●
104-3A-7	138℃	135±2℃	93℃	180℃	3A	250Vac	●	●	●	●	●	●
104-3A-8	150℃	145±3℃	105℃	180℃	3A	250Vac	●	●	●	●	●	●

ORDER INFORMATION

Product No.: KLS5- 104 - 3A X

- KLS5- : Part Number
- 104 : Side shell Thermal Fuse Series
- 3A : Rated Current
- X : Rated functioning temp

Thermal Fuse Series

KLS5-104 Side shell Thermal Fuse 5A Series

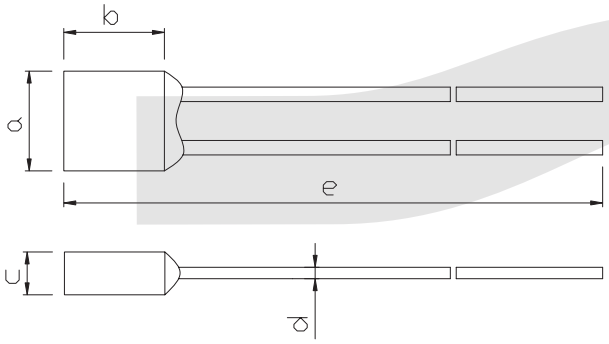



Dimension(mm)		5A Series		
a	b	c	d	e
6.6±0.5	8.0±0.5	2.5±0.3	ø0.6±0.02	60

104-5A Series												
Model No	Rated functioning temp (Tf)	Fusing-off temperature	Holding Temperature (Th)	Maximum temp. limit (Tm)	Rated current	Rated voltage	Safety approval					RoHS Compliace
					(Ir)	(Ur)	UL	CUL	VDE	PSE	CCC	
104-5A-1	84℃	82±2℃	40℃	180℃	5A	250Vac	●	●	●	●	●	●
104-5A-2	102℃	98±2℃	63℃	180℃	5A	250Vac	●	●	●	●	●	●
104-5A-3	115℃	112±3℃	75℃	180℃	5A	250Vac	●	●	●	●	●	●
104-5A-4	125℃	120±3℃	85℃	180℃	5A	250Vac	●	●	●	●	●	●
104-5A-5	130℃	126±2℃	90℃	180℃	5A	250Vac	●	●	●	●	●	●
104-5A-6	135℃	131±3℃	90℃	180℃	5A	250Vac	●	●	●	●	●	●
104-5A-7	138℃	135±2℃	93℃	180℃	5A	250Vac	●	●	●	●	●	●
104-5A-8	150℃	145±3℃	105℃	180℃	5A	250Vac	●	●	●	●	●	●

ORDER INFORMATION

Product No.: KLS5- 104 - 5A X

- KLS5- : Part Number
- 104 : Side shell Thermal Fuse Series
- 5A : Rated Current
- X : Rated functioning temp

PTC Resettable Fuses Series

KLS5-JK6 PTC Resettable Fuses Series

KLS5-JK series of Polymer PTC self-resettable fuse (Polymer PTC Restoring Fuse) is a new-generation of overcurrent protection product, its function corresponds to the self-resettable and repeatedly-usable fuse, being used to protect circuit from damage by high current and having such superiorities as automatic reset, high security, short restoring time, fine performance of resistance to strong current as well as little volume. The products are classified into 10 major categories and nearly 100 specifications based on their rated operation voltage (Operating Voltage : 6v-600v), holding current (Holding Current: 90mA-14A) and shape, they can be used in communication exchanger, main distributing frame, computer mouse, keyboard, micromotor, transformer, audio, battery and other electrical equipment as well as circuits, to play the role overcurrent protection.



Lead Material: Tinned Copper, Φ0.60 mm.
Encapsulation materials: flame-retardant epoxy powder, UL94V-0
Operating Temperature: -40°C ~ +85°C

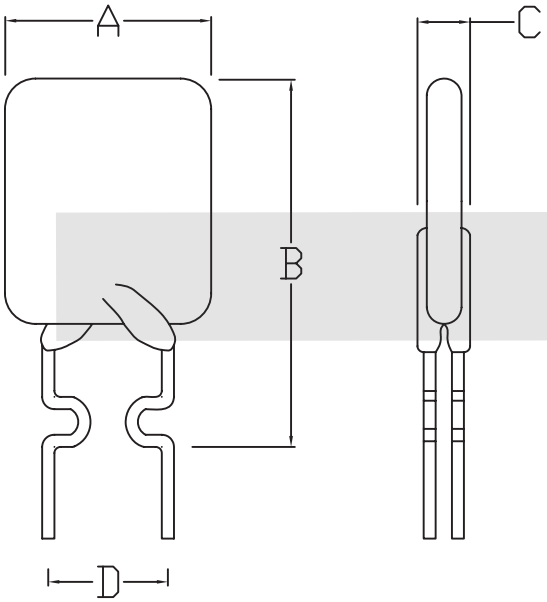

Figure 1

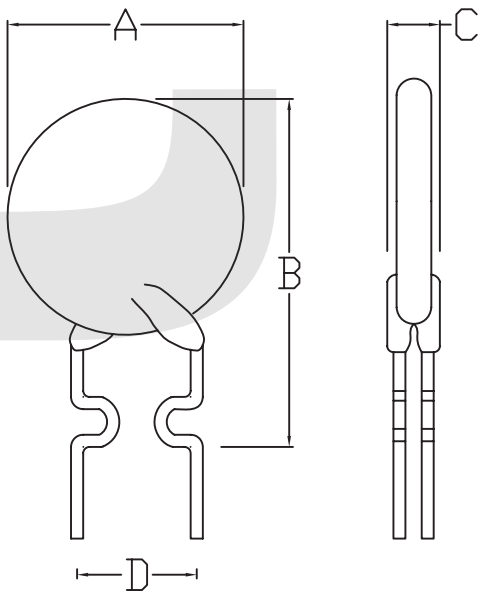

Figure 2

ORDER INFORMATION

ProductNO.: KLS5-JK 6-075

Pos. No.
PTC Resettable Fuses Series

Hold Current

Withstand voltage

PTC Resettable Fuses Series

KLS5-JK6 PTC Resettable Fuses Series

Electrical characteristics (25°C)

Model	V_{max}	I_{max}	I_h	R_{max}	R_{min}	Pd	Fig.	Maximum Contour Size(mm)				
	(V)	(A)	(mA)	(Ω)	(Ω)	(W)		A	B	C	D	E
JK6-075	6	40	0.75	0.5	0.2	0.3	2	7.4	12.7	5.1	7.6	3.1
JK6-090	6	40	0.9	0.3	0.1	0.6	2	7.4	13	5.1	7.6	3.1
JK6-110	6	40	1.1	0.27	0.1	0.7	1	7.8	13	5.1	7.6	3.1
JK6-120	6	40	1.2	0.22	0.12	0.6	2	7.4	13.5	5.1	7.6	3.1
JK6-135	6	40	1.35	0.18	0.07	0.8	2	7.4	13.5	5.1	7.6	3.1
JK6-155	6	40	1.55	0.16	0.06	0.8	2	7.4	13.5	5.1	7.6	3.1
JK6-160	6	40	1.6	0.16	0.05	0.9	1	7.8	16	5.1	7.6	3.1
JK6-185	6	40	1.85	0.11	0.04	1	1	7.8	16	5.1	7.6	3.1
JK6-250	6	40	2.5	0.08	0.02	1.2	1	10	16	5.1	7.6	3.1

ORDER INFORMATION

ProductNO.: KLS5-JK 6-075

- KLS5-JK: Pos. No. — PTC Resettable Fuses Series
- 6: Withstand voltage
- 075: Hold Current

PTC Resettable Fuses Series

KLS5-JK16 PTC Resettable Fuses Series

KLS5-JK series of Polymer PTC self-resettable fuse (Polymer PTC Restoring Fuse) is a new-generation of overcurrent protection product, its function corresponds to the self-resettable and repeatedly-usable fuse, being used to protect circuit from damage by high current and having such superiorities as automatic reset, high security, short restoring time, fine performance of resistance to strong current as well as little volume. The products are classified into 10 major categories and nearly 100 specifications based on their rated operation voltage (Operating Voltage : 6v-600v), holding current (Holding Current: 90mA-14A) and shape, they can be used in communication exchanger, main distributing frame, computer mouse, keyboard, micromotor, transformer, audio, battery and other electrical equipment as well as circuits, to play the role overcurrent protection.



Lead Material: Tinned Copper, Φ0.80 mm.
Encapsulation materials: flame-retardant epoxy powder, UL94V-0
Operating Temperature: -40°C ~ +85°C

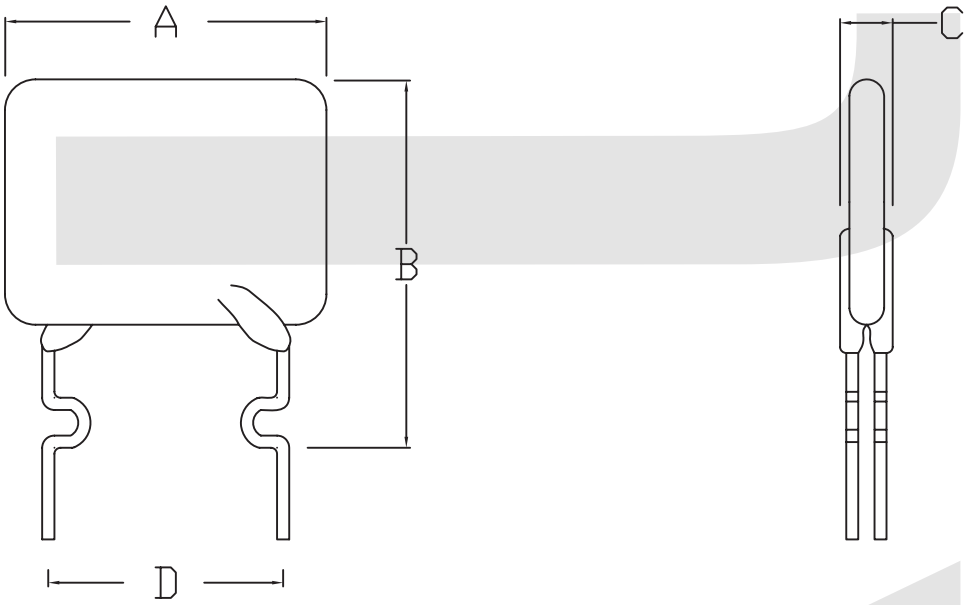

ORDER INFORMATION

ProductNO.: KLS5-JK 16-300

- Pos. No. / PTC Resettable Fuses Series
- Hold Current
- Withstand voltage

PTC Resettable Fuses Series

KLS5-JK16 PTC Resettable Fuses Series

Electrical characteristics (25°C)

Model	Vmax	Imax	Ih	Rmax	Rmin	Pd
	(V)	(A)	(A)	(mΩ)	(mΩ)	(W)
JK16-300	16	40	3	60	20	2.3
JK16-400	16	40	4	40	20	2.4
JK16-500	16	40	5	25	14	2.6
JK16-600	16	40	6	21	10	2.8
JK16-700	16	40	7	15	6	3
JK16-900	16	40	9	13	4	3.3
JK16-1000	16	40	10	12	6	3.7
JK16-1100	16	40	11	10	2	3.7
JK16-1200	16	40	12	10	2	4.2
JK16-1400	16	40	14	8	2	4.6

Product dimensions(mm)

Model	A(max)	B(max)	C(max)	D(max)	E(max)
JK16-300	9	12	5.1	7.6	3.1
JK16-400	10	13	5.1	7.6	3.1
JK16-500	10.7	15	5.1	7.6	3.1
JK16-600	13.5	15	5.1	7.6	3.1
JK16-700	13.5	18	5.1	7.6	3.1
JK16-900	15	23	5.1	7.6	3.1
JK16-1000	18	24	5.1	7.6	3.1
JK16-1100	18	24	5.1	7.6	3.1
JK16-1200	22.5	25	10.2	7.6	3.1
JK16-1400	23.1	24.6	10.2	7.6	3.1

ORDER INFORMATION

ProductNO.: KLS5-JK 16-300

Pos. No.
PTC Resettable Fuses Series

Hold Current

Withstand voltage

PTC Resettable Fuses Series

KLS5-JK30 PTC Resettable Fuses Series

KLS5-JK series of Polymer PTC self-resettable fuse (Polymer PTC Restoring Fuse) is a new-generation of overcurrent protection product, its function corresponds to the self-resettable and repeatedly-usable fuse, being used to protect circuit from damage by high current and having such superiorities as automatic reset, high security, short restoring time, fine performance of resistance to strong current as well as little volume. The products are classified into 10 major categories and nearly 100 specifications based on their rated operation voltage (Operating Voltage : 6v-600v), holding current (Holding Current: 90mA-14A) and shape, they can be used in communication exchanger, main distributing frame, computer mouse, keyboard, micromotor, transformer, audio, battery and other electrical equipment as well as circuits, to play the role overcurrent protection.



Lead Material: Tinned Copper, Φ0.60 mm.
Encapsulation materials: flame-retardant epoxy powder, UL94V-0
Operating Temperature: -40°C ~ +85°C

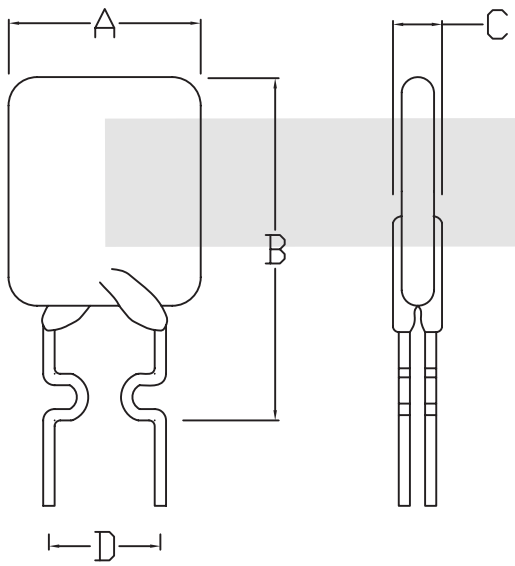

Figure 1

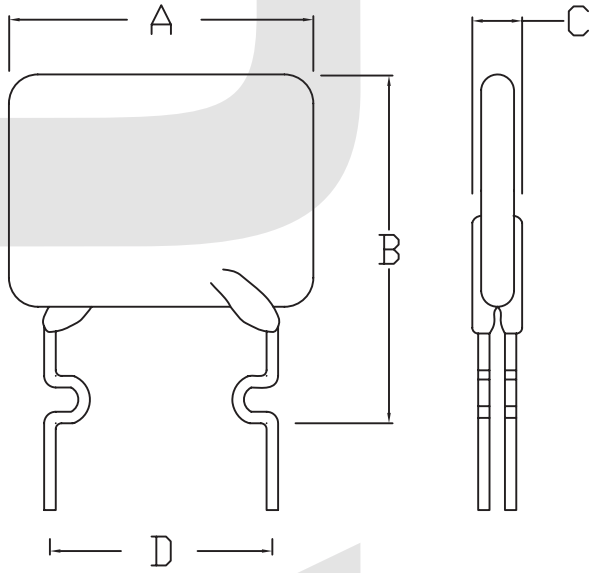

Figure 2

ORDER INFORMATION

ProductNO.: KLS5-JK 30-090

Pos. No.
PTC Resettable Fuses Series
Hold Current
Withstand voltage

PTC Resettable Fuses Series

KLS5-JK30 PTC Resettable Fuses Series

Electrical characteristics (25°C)

Model/PDF	Vmax	Imax	Ih	Rmax	Rmin	Fig.	Pd(W)	Maximum Contour Size(mm)			
	(V)	(A)	(A)	(Ω)	(Ω)			A	B	C	D
JK30-090	30	40	0.9	0.22	0.13	1	0.6	7.4	12.2	3.1	5.1
JK30-110	30	40	1.1	0.2	0.09	1	0.7	7.4	12.2	3.1	5.1
JK30-135	30	40	1.35	0.16	0.07	1	0.8	9.2	13.5	3.1	5.1
JK30-160	30	40	1.6	0.14	0.06	1	0.9	9.2	15.2	3.1	5.1
JK30-185	30	40	1.85	0.12	0.05	1	1	9.2	15.2	3.1	5.1
JK30-200	30	40	2	0.1	0.04	1	1.2	15.2	15.2	3.1	5.1
JK30-250	30	40	2.5	0.08	0.03	1	1.2	13.2	18.3	3.1	5.1
JK30-300	30	40	3	0.07	0.03	2	2	13.2	17.3	3.1	5.1
JK30-400	30	40	4	0.06	0.01	2	2.5	14	20.1	3.1	5.1
JK30-500	30	40	5	0.05	0.01	2	3	14	20.1	3.1	10.2
JK30-600	30	40	6	0.04	0.005	2	3.5	17.2	24.9	3.1	10.2
JK30-700	30	40	7	0.03	0.005	2	3.8	17.2	24.9	3.1	10.2
JK30-800	30	40	8	0.025	0.005	2	4	23.5	29.2	3.1	10.2
JK30-900	30	40	9	0.02	0.005	2	4.2	23.5	29.2	3.1	10.2

ORDER INFORMATION

ProductNO.: KLS5-JK 30-090

- Pos. No. / PTC Resettable Fuses Series
- Hold Current
- Withstand voltage

PTC Resettable Fuses Series

KLS5-JK60 PTC Resettable Fuses Series

KLS5-JK series of Polymer PTC self-resettable fuse (Polymer PTC Restoring Fuse) is a new-generation of overcurrent protection product, its function corresponds to the self-resettable and repeatedly-usable fuse, being used to protect circuit from damage by high current and having such superiorities as automatic reset, high security, short restoring time, fine performance of resistance to strong current as well as little volume. The products are classified into 10 major categories and nearly 100 specifications based on their rated operation voltage (Operating Voltage : 6v-600v), holding current (Holding Current: 90mA-14A) and shape, they can be used in communication exchanger, main distributing frame, computer mouse, keyboard, micromotor, transformer, audio, battery and other electrical equipment as well as circuits, to play the role overcurrent protection.



Lead Material: Tinned Copper, Φ0.60 mm.
Encapsulation materials: flame-retardant epoxy powder, UL94V-0
Operating Temperature: -40°C ~ +85°C

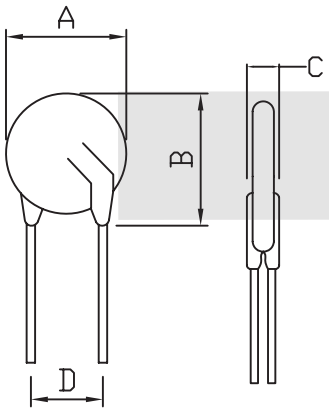

Figure 1

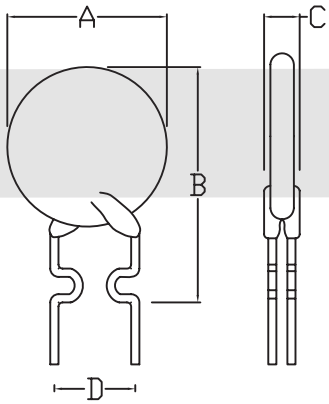

Figure 2

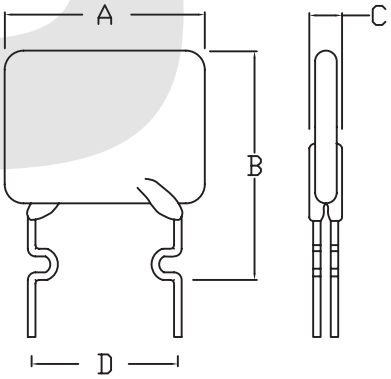

Figure 3

ORDER INFORMATION

ProductNO.: KLS5-JK 60-005

Pos. No.
PTC Resettable Fuses Series
Hold Current
Withstand voltage

PTC Resettable Fuses Series

KLS5-JK60 PTC Resettable Fuses Series

Electrical characteristics (25°C)

Model	Vmax	Imax	Ih	Rmax	Rmin	Pd	Fig.	Maximum Contour Size(mm)			
	(V)	(A)	(A)	(Ω)	(Ω)	(W)		A	B	C	D
JK60-005	60	40	0.05	20	12	0.3	1	5	8.5	3.1	5.1
JK60-010	60	40	0.1	7.5	2.5	0.38	1	5.5	9.5	3.1	5.1
JK60-017	60	40	0.17	5.21	2.84	0.48	1	7.4	12.7	3.1	5.1
JK60-020	60	40	0.2	2.84	1.83	0.41	1	7.4	12.7	3.1	5.1
JK60-025	60	40	0.25	1.95	1.25	0.45	1	7.4	12.7	3.1	5.1
JK60-030	60	40	0.3	1.36	0.88	0.49	1	7.4	13	3.1	5.1
JK60-040	60	40	0.4	0.88	0.55	0.56	2	7.4	13.5	3.1	5.1
JK60-050	60	40	0.5	0.79	0.5	0.77	2	7.6	13.5	3.1	5.1
JK60-065	60	40	0.65	0.5	0.31	0.88	2	9.4	14.5	3.1	5.1
JK60-075	60	40	0.75	0.42	0.25	0.92	2	10.2	15.2	3.1	5.1
JK60-090	60	40	0.9	0.33	0.2	0.99	2	11.2	15.8	3.1	5.1
JK60-110-Y	60	40	1.1	0.27	0.15	1.5	1	12.8	18	3.1	5.1
JK60-110-F	60	40	1.1	0.27	0.15	1.5	3	13	18	3.1	5.1
JK60-135	60	40	1.35	0.21	0.12	1.7	1	14.5	19.6	3.1	5.1
JK60-160	60	40	1.6	0.16	0.09	1.9	1	16.3	21.3	3.1	5.1
JK60-185	60	40	1.85	0.14	0.08	2.1	1	17.5	22.9	3.1	5.1
JK60-250	60	40	2.5	0.1	0.05	2.5	1	20.8	26.4	3.1	10.2
JK60-300	60	40	3	0.08	0.04	2.8	1	23.9	30	3.1	10.2
JK60-375	60	40	3.75	0.07	0.03	3.2	1	27.2	31.8	3.1	10.2
JK60-500	60	40	5	0.02	0.03	4.2	1	27.2	31.8	3.1	10.2

ORDER INFORMATION

ProductNO.: KLS5-JK 60-005

- KLS5-JK: Pos. No. PTC Resettable Fuses Series
- 60: Withstand voltage
- 005: Hold Current

PTC Resettable Fuses Series

KLS5-JK90 PTC Resettable Fuses Series

KLS5-JK series of Polymer PTC self-resettable fuse (Polymer PTC Restoring Fuse) is a new-generation of overcurrent protection product, its function corresponds to the self-resettable and repeatedly-usable fuse, being used to protect circuit from damage by high current and having such superiorities as automatic reset, high security, short restoring time, fine performance of resistance to strong current as well as little volume. The products are classified into 10 major categories and nearly 100 specifications based on their rated operation voltage (Operating Voltage : 6v-600v), holding current (Holding Current: 90mA-14A) and shape, they can be used in communication exchanger, main distributing frame, computer mouse, keyboard, micromotor, transformer, audio, battery and other electrical equipment as well as circuits, to play the role overcurrent protection.



Lead Material: Tinned Copper, Φ0.60 mm.
Encapsulation materials: flame-retardant epoxy powder, UL94V-0
Operating Temperature: -40°C ~ +85°C

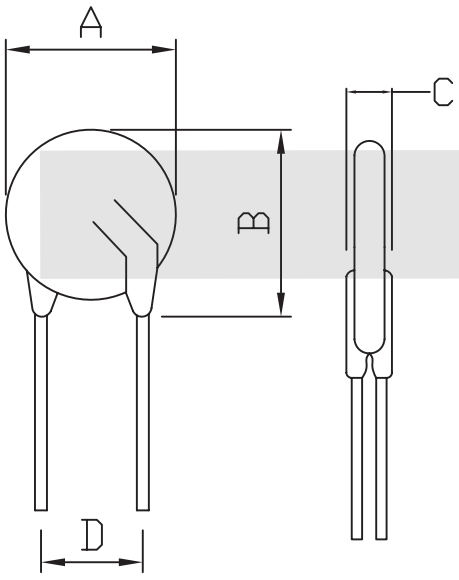

Figure 1

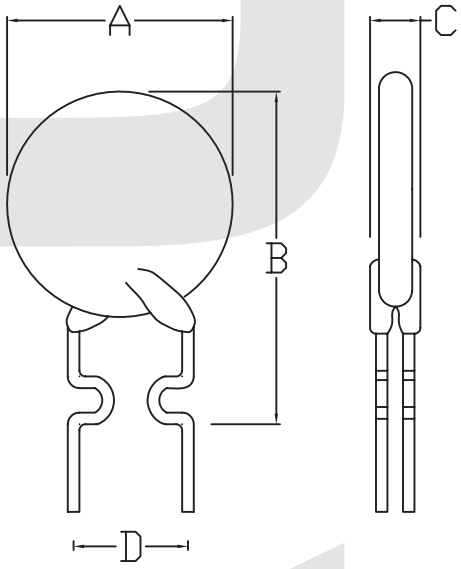

Figure 2

ORDER INFORMATION

ProductNO.: KLS5-JK 90-150

Pos. No.
PTC Resettable Fuses Series
Hold Current
Withstand voltage

PTC Resettable Fuses Series

KLS5-JK90 PTC Resettable Fuses Series

Electrical characteristics (25°C)

Model	Ih	It	Vmax	Imax	Max.Time To Trip At 3*Ih	Pd	Initial resistance (Ω)		Fig
	(A)	(A)	(V)	(A)	(S)	(W)	Rmin	Rmax	
JK90-150	0.15	0.3	90	20	60	1.65	1.5	3	2
JK90-200	0.2	0.4	90	20	60	1.7	1	2.5	2
JK90-250	0.25	0.5	90	20	60	1.75	0.8	2	2
JK90-350	0.35	0.75	90	20	60	1.8	0.6	1.2	2
JK90-550I	0.55	1.1	90	20	60	2	0.3	0.9	1
JK90-550	0.55	1.1	90	20	60	2	0.35	0.9	2
JK90-750	0.75	1.5	90	20	60	2.5	0.2	0.6	2
JK90-900	0.9	1.8	90	20	60	3	0.1	0.5	2

Product dimensions(mm)

Model	A(max)	B(max)	C(max)	D(max)
JK90-150	4.8	12.7	3	5.1
JK90-200	5.4	13.3	3	5.1
JK90-250	6.2	14	3	5.1
JK90-350	7.8	15.6	3	5.1
JK90-550	9.7	17.5	3	5.1
JK90-550I	9.7	17.5	3	5.1
JK90-750	11.2	19	3	5.1
JK90-900	12.8	20.5	3	5.1

ORDER INFORMATION

ProductNO.: KLS5-JK 90-150

- Pos. No. PTC Resettable Fuses Series
- Hold Current
- Withstand voltage

PTC Resettable Fuses Series

KLS5-JK120 PTC Resettable Fuses Series

KLS5-JK series of Polymer PTC self-resettable fuse (Polymer PTC Restoring Fuse) is a new-generation of overcurrent protection product, its function corresponds to the self-resettable and repeatedly-usable fuse, being used to protect circuit from damage by high current and having such superiorities as automatic reset, high security, short restoring time, fine performance of resistance to strong current as well as little volume. The products are classified into 10 major categories and nearly 100 specifications based on their rated operation voltage (Operating Voltage : 6v-600v), holding current (Holding Current: 90mA-14A) and shape, they can be used in communication exchanger, main distributing frame, computer mouse, keyboard, micromotor, transformer, audio, battery and other electrical equipment as well as circuits, to play the role overcurrent protection.



Lead Material: Tinned Copper, Φ0.60 mm.
Encapsulation materials: flame-retardant epoxy powder, UL94V-0
Operating Temperature: -40°C ~ +85°C

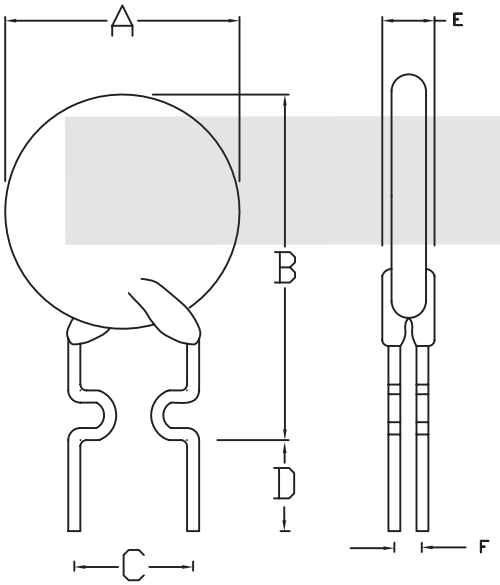

Figure 1

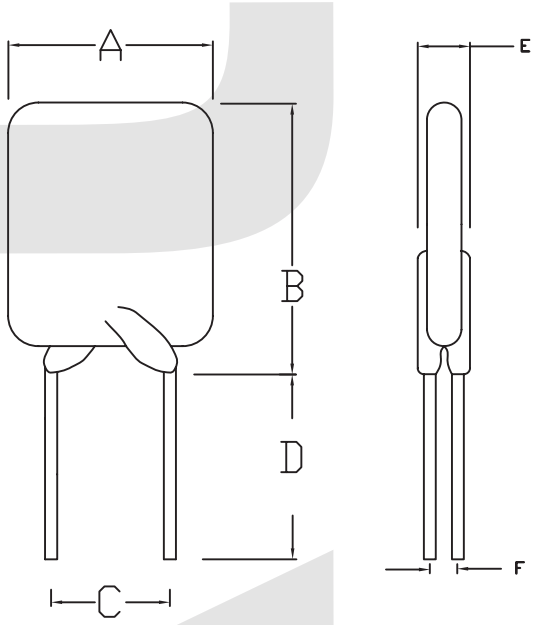

Figure 2

ORDER INFORMATION

ProductNO.: KLS5-JK 120-150

Pos. No.
PTC Resettable Fuses Series
Hold Current
Withstand voltage

PTC Resettable Fuses Series

KLS5-JK120 PTC Resettable Fuses Series

Product dimensions(mm)

Part Number	Figure type	A Maximum	B Maximum	C Typical	D Minimum	E Maximum	F Typical
JK120-010	1	7.9	13	5.1	7.6	3.8	2.2
JK120-017	1	7.9	13	5.1	7.6	3.8	2.2
JK120-020	1	7.9	13	5.1	7.6	3.8	2.2
JK120-025	1	7.9	13	5.1	7.6	3.8	2.2
JK120-030	1	7.9	13	5.1	7.6	3.8	2.2
JK120-040	1	8.2	14.2	5.1	7.6	3.8	2.2
JK120-050	1	9.2	14.9	5.1	7.6	3.8	2.2
JK120-065	1	9.7	14.9	5.1	7.6	3.8	2.2
JK120-070	1	10.6	15.5	5.1	7.6	3.8	2.2
JK120-075	2	10.9	17	5.1	7.6	4.1	2.2
JK120-090	1	11.9	15.9	5.1	7.6	3.8	2.2
JK120-100	2	11.5	20.1	5.1	7.6	4.1	2.2
JK120-110	1	13.3	18.3	5.1	7.6	4.1	2.2
JK120-125	2	14	21.7	5.1	7.6	4.1	2.2
JK120-130	1	15.5	20.6	5.1	7.6	4.1	2.2
JK120-135	2	16.3	21.7	5.1	7.6	4.1	2.2
JK120-160	1	17.5	22.5	5.1	7.6	4.1	2.2
JK120-185	1	19.9	24.9	5.1	7.6	4.1	2.2
JK120-200	2	23.5	27.9	10.2	7.6	4.1	2.2
JK120-250	1	22.5	27.5	10.2	7.6	4.1	2.2
JK120-300	1	25.5	30	10.2	7.6	4.1	2.2
JK120-375	1	29.5	34	10.2	7.6	4.1	2.2

ORDER INFORMATION

ProductNO.: KLS5-JK 120-150

Pos. No.
PTC Resettable Fuses Series
Hold Current
Withstand voltage

PTC Resettable Fuses Series

KLS5-JK120 PTC Resettable Fuses Series

Electrical characteristics (25°C)

Part NumberM	Hold Current IH, A	Trip Current IT, A	Max.Time to Trip at 5xIH, S	Maximum Current IMAX, A	Rated Voltage VMAX,Vdc	Typical Power Pd, W	Resistance RMIN ohms	R1MAX ohms
JK120-010	0.1	0.2	10	2	120	0.84	3	7.5
JK120-017	0.17	0.34	10	2	120	0.84	2	7
JK120-020	0.2	0.4	9	2	120	1.08	1.83	4.4
JK120-025	0.25	0.5	7.5	3	120	1.08	1.25	3
JK120-030	0.3	0.6	8.5	3	120	1.44	0.88	2.1
JK120-040	0.4	0.8	6.5	3	120	1.44	0.55	1.29
JK120-050	0.5	1	6	3	120	1.56	0.5	1.17
JK120-065	0.65	1.3	5.7	5	120	1.68	0.31	0.72
JK120-070	0.75	1.5	6.3	5	120	1.8	0.25	0.6
JK120-075	0.75	1.5	15	7.5	120	2.64	0.25	0.69
JK120-090	0.9	1.8	7.2	5	120	1.8	0.2	0.47
JK120-100	1	2	15	10	120	2.64	0.18	0.47
JK120-110	1.1	2.2	8.2	8	120	2.28	0.15	0.38
JK120-125	1.25	2.5	20	12.5	120	2.88	0.11	0.33
JK120-130	1.35	2.7	9.6	10	120	2.64	0.12	0.3
JK120-135	1.35	2.7	20	13.5	120	3.12	0.11	0.3
JK120-160	1.6	3.2	11.4	12	120	3.12	0.09	0.22
JK120-185	1.85	3.7	12.6	12	120	3.36	0.08	0.19
JK120-200	2	4.2	36	20	120	4.32	0.08	0.21
JK120-250	2.5	5	15.6	15	120	4.44	0.05	0.13
JK120-300	3	6	19.8	17	120	4.56	0.04	0.1
JK120-375	3.75	7.5	24	20	120	4.8	0.03	0.08

ORDER INFORMATION

ProductNO.: KLS5-JK 120-150

Pos. No.
PTC Resettable Fuses Series

Hold Current

Withstand voltage

PTC Resettable Fuses Series

KLS5-JK250 PTC Resettable Fuses Series

KLS5-JK series of Polymer PTC self-resettable fuse (Polymer PTC Restoring Fuse) is a new-generation of overcurrent protection product, its function corresponds to the self-resettable and repeatedly-usable fuse, being used to protect circuit from damage by high current and having such superiorities as automatic reset, high security, short restoring time, fine performance of resistance to strong current as well as little volume. The products are classified into 10 major categories and nearly 100 specifications based on their rated operation voltage (Operating Voltage : 6v-600v), holding current (Holding Current: 90mA-14A) and shape, they can be used in communication exchanger, main distributing frame, computer mouse, keyboard, micromotor, transformer, audio, battery and other electrical equipment as well as circuits, to play the role overcurrent protection.



Lead Material: Tinned Copper, Φ0.60 mm.
Encapsulation materials: flame-retardant epoxy powder, UL94V-0
Operating Temperature: -40°C ~ +85°C

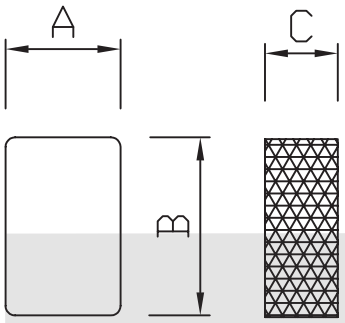

Figure 1

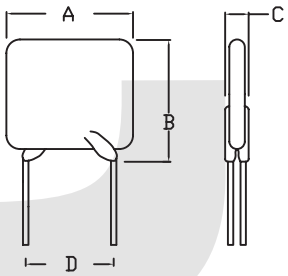

Figure 2

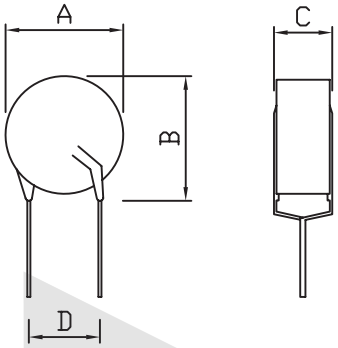

Figure 3

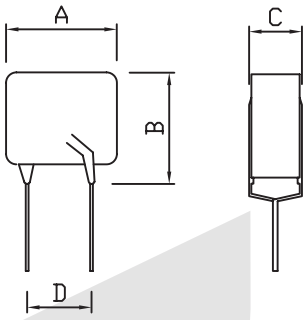

Figure 4

ORDER INFORMATION

ProductNO.: KLS5-JK 250-060U

- KLS5-JK: Pos. No. PTC Resettable Fuses Series
- 250: Withstand voltage
- 060: Hold Current
- U

PTC Resettable Fuses Series

KLS5-JK250 PTC Resettable Fuses Series

Electrical characteristics (25°C)

Model	V_{max}	I_{max}	I_h	R_{max}	R_{min}	Fig	Maximum Contour Size（mm）			
	(V)	(A)	(mA)	(Ω)	(Ω)	TYPE	A	B	C	D
JK250-060U	250	3	60	40	26	3	6	9.3	3.8	5.1
JK250-080U	250	3	80	22	14	3	6	9.3	3.8	5.1
JK250-090U	250	3	90	20	10	3	6	9.3	3.8	5.1
JK250-110U	250	3	110	12	6	4	6.5	10	3.8	5.1
JK250-120	250	3	120	10	5	1	5.5	5.5	2.6	5.1
JK250-120U	250	3	120	10	6	4	7	10	3.8	5.1
JK250-145uU	250	3	145	6.5	3.5	4	7	10	3.8	5.1
JK250-180T	250	10	180	2.2	1	3	10.2	14.5	3.4	5.1
JK250-180U	250	10	180	3	1	4	10.4	14.5	3.8	5.1
JK250-200U	250	10	200	6	3	2	10.5	17	3.8	5.1
JK250-400U	250	10	400	3	1	2	10.5	17	3.8	5.1
JK250-600U	250	10	600	2	0.6	2	16	18	4.5	5.1
JK250-800U	250	10	800	1	0.4	2	20	22	4.5	5.1

ORDER INFORMATION

ProductNO.: KLS5-JK 250-060U

- KLS5-JK: Pos. No. PTC Resettable Fuses Series
- 250: Withstand voltage
- 060U: Hold Current

PTC Resettable Fuses Series

KLS5-JK600 PTC Resettable Fuses Series

KLS5-JK series of Polymer PTC self-resettable fuse (Polymer PTC Restoring Fuse) is a new-generation of overcurrent protection product, its function corresponds to the self-resettable and repeatedly-usable fuse, being used to protect circuit from damage by high current and having such superiorities as automatic reset, high security, short restoring time, fine performance of resistance to strong current as well as little volume. The products are classified into 10 major categories and nearly 100 specifications based on their rated operation voltage (Operating Voltage : 6v-600v), holding current (Holding Current: 90mA-14A) and shape, they can be used in communication exchanger, main distributing frame, computer mouse, keyboard, micromotor, transformer, audio, battery and other electrical equipment as well as circuits, to play the role overcurrent protection.



Lead Material: Tinned Copper, Φ0.60 mm.
Encapsulation materials: flame-retardant epoxy powder, UL94V-0
Operating Temperature: -40°C ~ +85°C

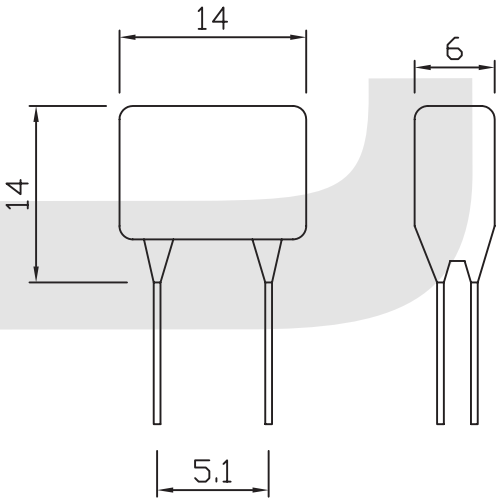

Electrical characteristics (25°C)

Model	V_{max}	$V_{max.inter}$	I_{max}	I_h	R_{max}	R_{min}
	(V)	(V)	(A)	(mA)		(Ω)
JK600-110U	60	600	3	110	14	7
JK600-150U	60	600	3	150	12	6
JK600-160U	60	600	3	160	10	4

ORDER INFORMATION

ProductNO.: KLS5-JK 600-110U

- KLS5-JK: Pos. No. PTC Resettable Fuses Series
- 600: Withstand voltage
- 110: Hold Current

HOW DOES THE RESETTABLE FUSE ORK

Resettable fuses are designed and made of patented novel polymeric PTC material in thin chip form . With electrodes and leads attached on both sides, it is placed in series to protect a circuit. At "normal operating condition" the device remains at an extremely low resistance (milli-ohms) and allows the electrical current to flow through it without any restriction. When overcurrent conditions occur, the polymeric PTC material heats up and its resistance increases sharply. Such a sharp resistance increase (to an insulated status) cuts off the current in the circuit, and consequently protects the element and device in the circuit. Upon fault current being removed, the resettable fuse cools and its resistance drops to the original extremely low value. The resettable fuse is "reset" and allows the current through the circuit again.

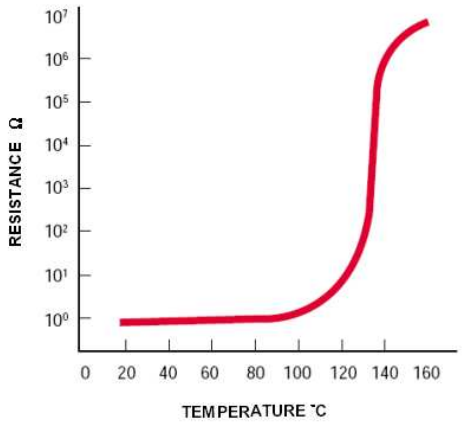

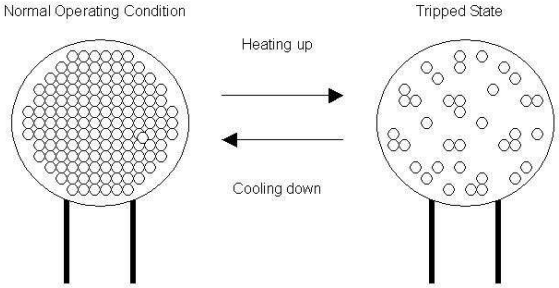

TRIP CURRENT, HOLD CURRENT AND THERMAL DERATING

Trip Current (IT) and Hold Current (IH) of Sinochip resettable fuse are rated at 23℃. Typically its Trip Current is twice as much as its Hold Current. Sinochip device does not trip at or below its rated Hold Current, and will trip at or above its Trip Current value. However, due to PTC effect both IT and IH reduce with ambient temperature increase and vice versa. As shown bellow, the currents are reduced nearly 50% at 85℃ and increased to 150% at -40℃.

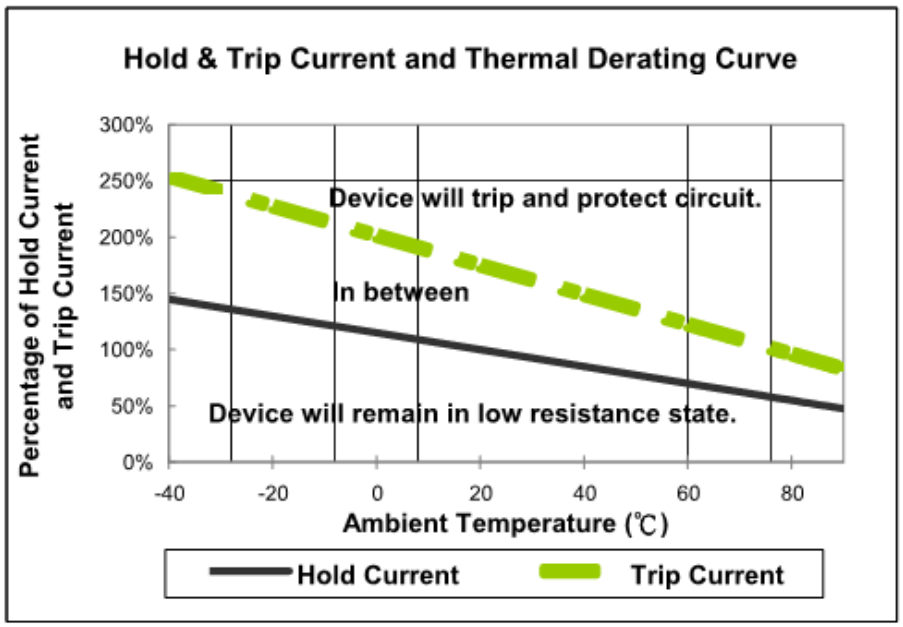

SMD2920 Resettable Fuses

RoHS Compliant & Halogen Free

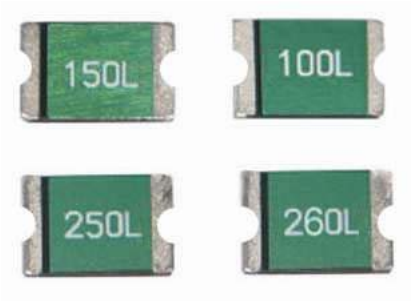

Application: All high-density boards

Product Features: 2920 Dimension, Surface mountable, Solid state,

Faster time to trip than standard SMD devices.

RoHS 2002/95/EC | HF Halogen Free

Operation Current: 0.3A~3.0A

Maximum Voltage: 6V~60V_{DC}

Electrical Characteristics (23℃)

Part Number	Hold Current I_H, A	Trip Current I_T, A	Rated Voltage V_{MAX},V_{DC}	Max Current I_{MAX}, A	Typ. Power Pd, W	Max Time to Trip		Resistance	
						Current A	Time Sec	R_{MIN} Ohms	$R1_{MAX}$ Ohms
SMD2920-030-60	0.30	0.60	60	10	1.5	1.5	3.0	1.000	4.800
SMD2920-050-60	0.50	1.00	60	10	1.5	2.5	4.0	0.300	1.400
SMD2920-075-33	0.75	1.50	33	40	1.5	8.0	0.3	0.180	1.000
SMD2920-100-33	1.10	2.20	33	40	1.5	8.0	0.5	0.090	0.410
SMD2920-125-33	1.25	2.50	33	40	1.5	8.0	2.0	0.050	0.250
SMD2920-150-33	1.50	3.00	33	40	1.5	8.0	2.0	0.050	0.230
SMD2920-185-33	1.85	3.70	33	40	1.5	8.0	2.5	0.040	0.150
SMD2920-200-16	2.00	4.00	16	40	1.5	8.0	4.5	0.035	0.120
SMD2920-250-16	2.50	5.00	16	40	1.5	8.0	16.0	0.025	0.085
SMD2920-260-6	2.60	5.20	6	40	1.5	8.0	20.0	0.020	0.075
SMD2920-300-6	3.00	5.20	6	40	1.5	8.0	25.0	0.010	0.048

Thermal Derating for PPTC Device at Various Ambient Temperatures

TEMPERATURE	-40℃	-20℃	0℃	23℃	30℃	40℃	50℃	60℃	70℃	85℃
DERATING %	158%	134%	117%	100%	92%	83%	75%	66%	58%	45%

2920 Product Dimensions (mm)

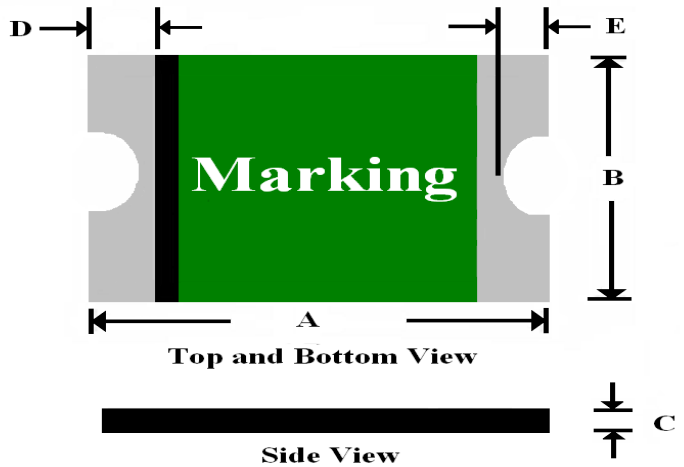

SMD2920 Resettable Fuses

Part Number	A		B		C		D		E	
	Min	Max	Min	Max	Min	Max	Min	Max	Min	Max
SMD2920-030-60	6.73	7.98	4.80	5.44	0.60	1.15	0.50	1.20	0.50	0.90
SMD2920-050-60	6.73	7.98	4.80	5.44	0.60	1.15	0.50	1.20	0.50	0.90
SMD2920-075-33	6.73	7.98	4.80	5.44	0.40	1.15	0.50	1.20	0.50	0.90
SMD2920-100-33	6.73	7.98	4.80	5.44	0.40	1.00	0.50	1.20	0.50	0.90
SMD2920-125-33	6.73	7.98	4.80	5.44	0.40	0.90	0.50	1.20	0.50	0.90
SMD2920-150-33	6.73	7.98	4.80	5.44	0.40	0.90	0.50	1.20	0.50	0.90
SMD2920-185-33	6.73	7.98	4.80	5.44	0.30	0.90	0.50	1.20	0.50	0.90
SMD2920-200-16	6.73	7.98	4.80	5.44	0.30	0.90	0.50	1.20	0.50	0.90
SMD2920-250-16	6.73	7.98	4.80	5.44	0.30	0.90	0.50	1.20	0.50	0.90
SMD2920-260-6	6.73	7.98	4.80	5.44	0.30	0.90	0.50	1.20	0.50	0.90
SMD2920-300-6	6.73	7.98	4.80	5.44	0.40	0.90	0.50	1.20	0.50	0.90

Typical Time-To-Trip at 23℃

A = SMD2920-030-60
B = SMD2920-050-60
C = SMD2920-075-33
D = SMD2920-100-33
E = SMD2920-125-33
F = SMD2920-150-33
G = SMD2920-185-33
H = SMD2920-200-16
I = SMD2920-250-16
J = SMD2920-260-6
K= SMD2920-300-6

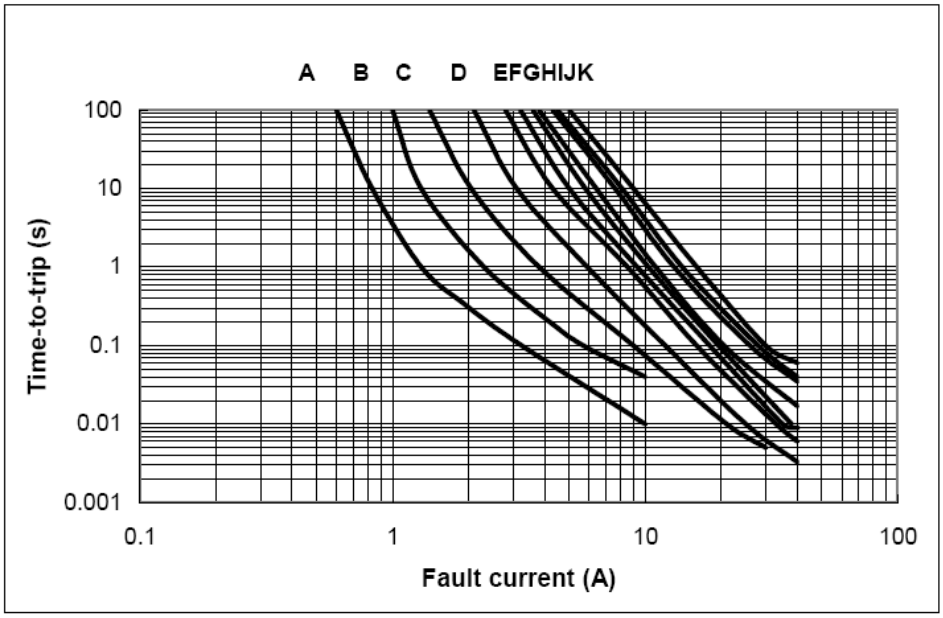

Standard Package: 2.0K Reel/Tape

SMD1812 Resettable Fuses

RoHS Compliant & Halogen Free

RoHS 2002/95/EC | HF Halogen Free

Application: All high-density boards

Product Features: Small surface mount, Solid state Faster time to trip than standard SMD devices Lower resistance than standard SMD devices

Operation Current: 0.1A~3.0A

Maximum Voltage: 6V~60V_{DC} **Temperature Range:** -40℃ to 85℃

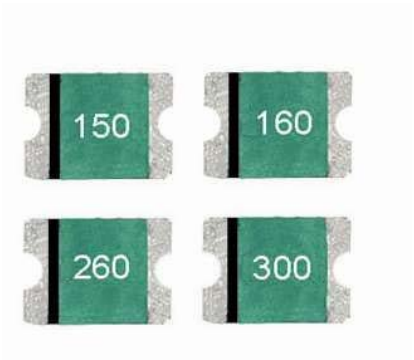

Electrical Characteristics(23℃)

Part Number	Hold Current	Trip Current	Rated Voltage	Max Current	Typ. Power	Max Time to Trip		Resistance	
						Current	Time	R_{MIN}	$R1_{MAX}$
	I_H, A	I_T, A	V_{MAX},V_{DC}	I_{MAX}, A	Pd, W	A	Sec	Ohms	Ohms
SMD1812-010-60	0.10	0.30	60	10	0.8	8.0	0.020	1.600	15.00
SMD1812-014-60	0.14	0.30	60	10	0.8	8.0	0.008	1.200	6.500
SMD1812-020-30	0.20	0.40	30	10	0.8	8.0	0.020	0.800	5.000
SMD1812-035-16	0.35	0.70	16	40	0.8	8.0	0.100	0.320	1.500
SMD1812-050-16	0.50	1.00	16	40	0.8	8.0	0.150	0.150	1.000
SMD1812-075-16	0.75	1.50	16	40	0.8	8.0	0.200	0.110	0.450
SMD1812-075-24	0.75	1.50	24	40	1.0	8.0	0.200	0.110	0.290
SMD1812-075-33	0.75	1.50	33	40	1.0	8.0	0.200	0.110	0.400
SMD1812-110-8	1.10	2.20	8	100	0.8	8.0	0.300	0.040	0.210
SMD1812-110-16	1.10	2.20	16	100	0.8	8.0	0.500	0.040	0.180
SMD1812-110-24	1.10	2.20	24	100	1.0	8.0	0.500	0.060	0.200
SMD1812-125-6	1.25	2.50	6	40	0.8	8.0	0.400	0.050	0.140
SMD1812-150-8	1.50	3.00	8	100	0.8	8.0	0.500	0.040	0.110
SMD1812-150-12	1.50	3.00	12	100	1.0	8.0	0.500	0.040	0.110
SMD1812-150-24	1.50	3.00	24	100	1.0	8.0	1.500	0.040	0.120
SMD1812-160-8	1.60	3.20	8	100	0.8	8.0	0.500	0.030	0.100
SMD1812-160-12	1.60	3.20	12	100	1.0	8.0	1.000	0.030	0.100
SMD1812-160-16	1.60	3.20	16	100	1.0	8.0	1.000	0.030	0.100
SMD1812-200-8	2.00	3.50	8	100	1.0	8.0	2.000	0.020	0.070
SMD1812-260-6	2.60	5.00	6	100	1.0	8.0	2.500	0.015	0.047
SMD1812-260-13	2.60	5.00	13.2	100	1.3	8.0	5.000	0.015	0.050
SMD1812-260-16	2.60	5.00	16	100	1.3	8.0	5.000	0.015	0.050
SMD1812-300-6	3.00	5.00	6	100	1.0	8.0	4.000	0.012	0.040

Thermal Derating for PPTC Device at Various Ambient Temperatures

TEMPERATURE	-40℃	-20℃	0℃	23℃	30℃	40℃	50℃	60℃	70℃	85℃
DERATING %	157%	135%	118%	100%	93%	87%	79%	72%	65%	56%

1812 Product Dimensions (mm)

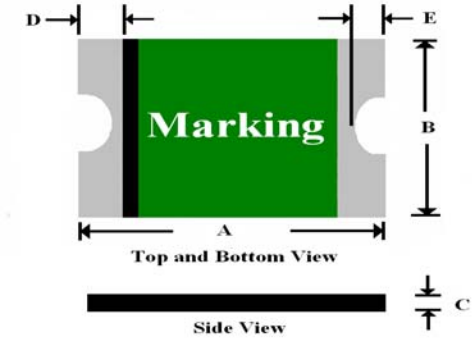

SMD1812 Resettable Fuses

Part Number	A		B		C		D		E	
	Min	Max	Min	Max	Min	Max	Min	Max	Min	Max
SMD1812-010-60	4.37	4.73	3.07	3.41	0.60	0.90	0.30	0.95	0.25	0.65
SMD1812-014-60	4.37	4.73	3.07	3.41	0.60	0.90	0.30	0.95	0.25	0.65
SMD1812-020-30	4.37	4.73	3.07	3.41	0.60	0.90	0.30	0.95	0.25	0.65
SMD1812-035-16	4.37	4.73	3.07	3.41	0.40	0.70	0.30	0.95	0.25	0.65
SMD1812-050-16	4.37	4.73	3.07	3.41	0.35	0.65	0.30	0.95	0.25	0.65
SMD1812-075-16	4.37	4.73	3.07	3.41	0.35	0.65	0.30	0.95	0.25	0.65
SMD1812-075-24	4.37	4.73	3.07	3.41	0.80	1.55	0.25	0.95	0.25	0.65
SMD1812-075-33	4.37	4.73	3.07	3.41	0.80	1.55	0.25	0.95	0.25	0.65
SMD1812-110-8	4.37	4.73	3.07	3.41	0.25	0.55	0.30	0.95	0.25	0.65
SMD1812-110-16	4.37	4.73	3.07	3.41	0.25	0.90	0.30	0.95	0.25	0.65
SMD1812-110-24	4.37	4.73	3.07	3.41	0.80	1.30	0.25	0.95	0.25	0.65
SMD1812-125-6	4.37	4.73	3.07	3.41	0.25	0.55	0.30	0.95	0.25	0.65
SMD1812-150-8	4.37	4.73	3.07	3.41	0.25	0.55	0.30	0.95	0.25	0.65
SMD1812-150-12	4.37	4.73	3.07	3.41	0.60	1.10	0.25	0.95	0.25	0.65
SMD1812-150-24	4.37	4.73	3.07	3.41	0.60	1.55	0.25	0.95	0.25	0.65
SMD1812-160-8	4.37	4.73	3.07	3.41	0.25	0.90	0.30	0.95	0.25	0.65
SMD1812-160-12	4.37	4.73	3.07	3.41	0.60	1.35	0.25	0.95	0.25	0.65
SMD1812-160-16	4.37	4.73	3.07	3.41	0.60	1.35	0.25	0.95	0.25	0.65
SMD1812-200-8	4.37	4.73	3.07	3.41	0.55	1.20	0.25	0.95	0.25	0.65
SMD1812-260-6	4.37	4.73	3.07	3.41	0.55	1.20	0.25	0.95	0.25	0.65
SMD1812-260-13	4.37	4.73	3.07	3.41	0.80	1.55	0.25	0.95	0.25	0.65
SMD1812-260-16	4.37	4.73	3.07	3.41	0.80	1.55	0.25	0.95	0.25	0.65
SMD1812-300-6	4.37	4.73	3.07	3.41	0.80	1.55	0.25	0.95	0.25	0.65

Typical Time-To-Trip at 23℃

A = SMD1812-010-60
B = SMD1812-014-60
C = SMD1812-020-30
D = SMD1812-035-16
E = SMD1812-050-16
F = SMD1812-075-16
075-24/075-33
G = SMD1812-110-8/
110-16/110-24
H = SMD1812-125-6
I = SMD1812-150-8/
150-12/150-24
J = SMD1812-160-8/
160-12/160-16
K = SMD1812-200-8
L = SMD1812-260-8/260-13/
260-16
M = SMD1812-300-8

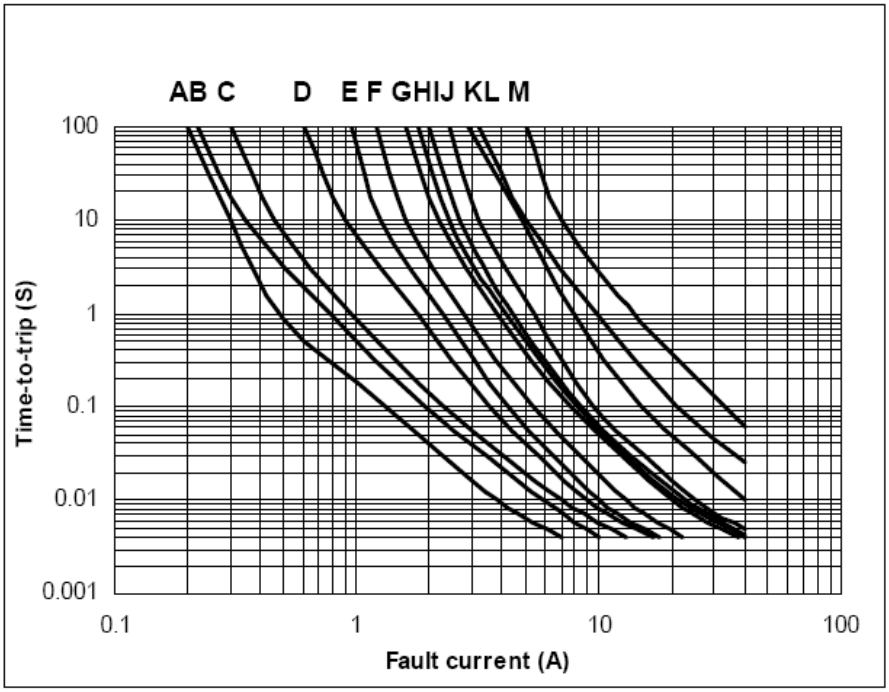

SMD1210 Resettable Fuses

RoHS Compliant & Halogen Free

RoHS 2002/95/EC | HF Halogen Free

Application: All high-density boards

Product Features: Small surface mount, Solid state Faster time to trip than standard SMD devices

Lower resistance than standard SMD devices

Operation Current: 0.05A~2.00A

Maximum Voltage: 6V~60V_{DC}

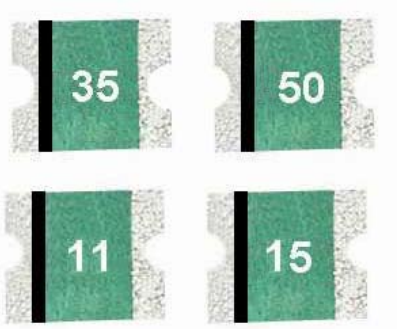

Electrical Characteristics(23℃)

Part Number	Hold Curren	Trip Curren	Rated Voltage	Max Curren	Typ. Power	Max Time to Trip		Resistance	
						Current	Time	R_{MIN}	$R1_{MAX}$
	I_H, A	I_T, A	V_{MAX}, V_{DC}	I_{MAX}, A	Pd, W	A	Sec	Ohms	Ohms
SMD1210-005-60	0.05	0.15	60	10	0.60	0.25	3.00	3.600	50.000
SMD1210-010-60	0.10	0.25	60	10	0.60	0.50	1.50	1.600	15.000
SMD1210-020-30	0.20	0.40	30	10	0.60	8.00	0.02	0.800	5.000
SMD1210-035-16	0.35	0.70	16	40	0.60	8.00	0.20	0.320	1.300
SMD1210-050-16	0.50	1.00	16	40	0.60	8.00	0.10	0.250	0.900
SMD1210-075-8	0.75	1.50	8	40	0.60	8.00	0.10	0.130	0.400
SMD1210-110-6	1.10	2.20	6	100	0.80	8.00	0.30	0.060	0.210
SMD1210-150-6	1.50	3.00	6	100	0.80	8.00	0.50	0.040	0.110
SMD1210-175-6	1.75	4.00	6	100	0.80	8.00	0.60	0.020	0.080
SMD1210-200-6	2.00	4.00	6	100	0.80	8.00	1.00	0.015	0.070

Thermal Derating for PPTC Device at Various Ambient Temperatures

TEMPERATURE	-40℃	-20℃	0℃	23℃	30℃	40℃	50℃	60℃	70℃	85℃
DERATING %	155%	132%	115%	100%	92%	83%	75%	64%	59%	46%

SMD1210 Product Dimensions (mm)

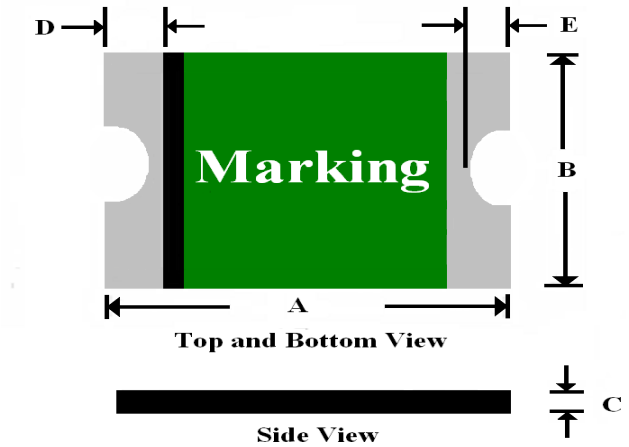

SMD1220 Resettable Fuses

Part Number	A		B		C		D		E	
	Min	Max	Min	Max	Min	Max	Min	Max	Min	Max
SMD1210-005-60	3.00	3.43	2.35	2.80	0.60	1.15	0.25	0.75	0.10	0.45
SMD1210-010-60	3.00	3.43	2.35	2.80	0.60	1.15	0.25	0.75	0.10	0.45
SMD1210-020-30	3.00	3.43	2.35	2.80	0.40	0.85	0.25	0.75	0.10	0.45
SMD1210-035-16	3.00	3.43	2.35	2.80	0.40	0.80	0.25	0.75	0.10	0.45
SMD1210-050-16	3.00	3.43	2.35	2.80	0.30	0.75	0.25	0.75	0.10	0.45
SMD1210-075-8	3.00	3.43	2.35	2.80	0.30	0.70	0.25	0.75	0.10	0.45
SMD1210-110-6	3.00	3.43	2.35	2.80	0.60	1.00	0.25	0.75	0.10	0.45
SMD1210-150-6	3.00	3.43	2.35	2.80	0.50	0.90	0.25	0.75	0.10	0.45
SMD1210-175-6	3.00	3.43	2.35	2.80	0.80	1.40	0.25	0.75	0.10	0.45
SMD1210-200-6	3.00	3.43	2.35	2.80	0.80	1.40	0.25	0.75	0.10	0.45

Typical Time-To-Trip at 23℃

A =SMD1210-005-60
B =SMD1210-010-60
C =SMD1210-020-30
D =SMD1210-035-16
E =SMD1210-050-16
F =SMD1210-075-8
G =SMD1210-110-6
H =SMD1210-150-6
I =SMD1210-175-6
J =SMD1210-200-6

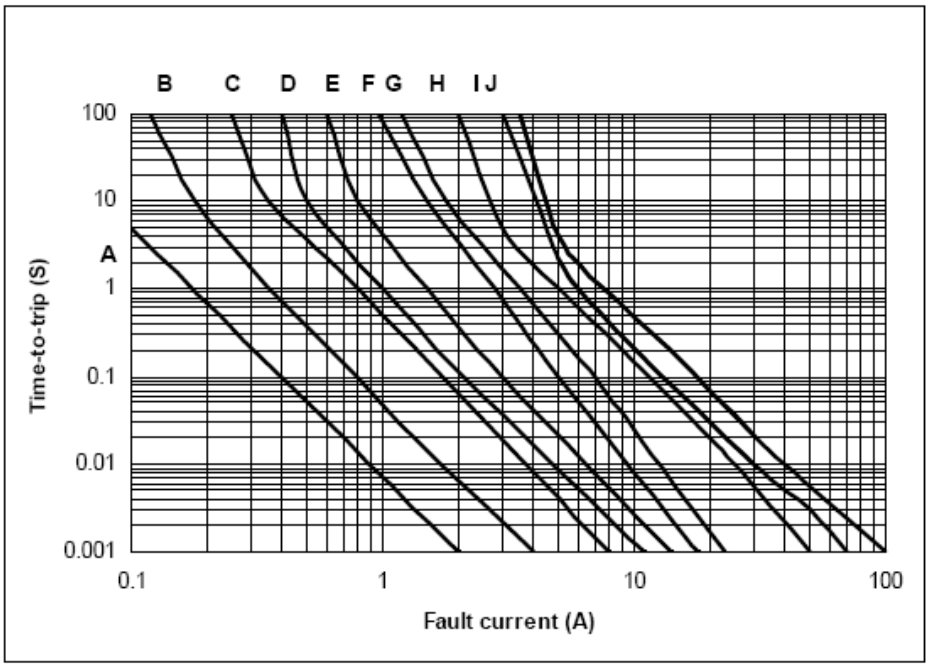

SMD1206 Resettable Fuses

RoHS Compliant & Halogen Free

RoHS 2002/95/EC | HF Halogen Free

Application: All high-density boards

Product Features: Small surface mount, Solid state Faster time to trip than standard SMD devices

Lower resistance than standard SMD devices

Operation Current: 0.05A~2.00A

Maximum Voltage: 6V~60V_{DC}

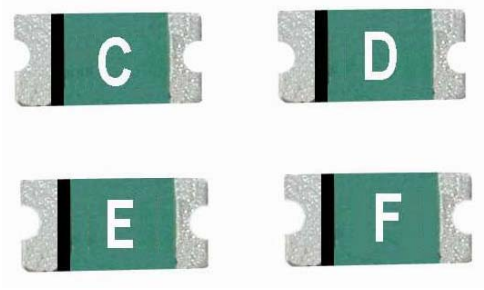

Electrical Characteristics(23℃)

Part Number	Hold Current	Trip Current	Rated Voltage	Max Current	Typ. Power	Max Time to Trip		Resistance	
						Current	Time	R_{MIN}	$R1_{MAX}$
	I_H, A	I_T, A	V_{MAX}, V_{DC}	I_{MAX}, A	Pd, W	A	Sec	Ohms	Ohms
SMD1206-005-60	0.05	0.15	60	10	0.4	0.25	1.50	3.600	50.000
SMD1206-010-60	0.10	0.25	60	10	0.4	0.50	1.00	1.600	15.000
SMD1206-012-48	0.12	0.39	48	10	0.6	1.00	0.20	1.400	6.500
SMD1206-016-48	0.16	0.45	48	10	0.6	1.00	0.30	1.100	5.000
SMD1206-020-30	0.20	0.40	30	10	0.4	8.00	0.10	0.600	2.500
SMD1206-025-16	0.25	0.50	16	40	0.6	8.00	0.08	0.550	2.300
SMD1206-035-16	0.35	0.75	16	40	0.4	8.00	0.10	0.300	1.200
SMD1206-050-8	0.50	1.00	8	40	0.4	8.00	0.10	0.150	0.700
SMD1206-050-24	0.50	1.00	24	100	0.6	8.00	0.10	0.150	0.750
SMD1206-075-6	0.75	1.50	6	100	0.6	8.00	0.20	0.090	0.290
SMD1206-075-16	0.75	1.50	16	100	0.6	8.00	0.20	0.090	0.290
SMD1206-100-6	1.00	1.80	6	100	0.6	8.00	0.30	0.055	0.210
SMD1206-110-6	1.10	2.20	6	100	0.8	8.00	0.30	0.040	0.180
SMD1206-150-6	1.50	3.00	6	100	0.8	8.00	1.00	0.030	0.120
SMD1206-200-6	2.00	3.50	6	100	0.8	8.00	1.50	0.018	0.080

Thermal Derating for PPTC Device at Various Ambient Temperatures

TEMPERATURE	-40℃	-20℃	0℃	23℃	30℃	40℃	50℃	60℃	70℃	85℃
DERATING %	148%	135%	117%	100%	94%	88%	81%	71%	66%	52%

SMD1206 Product Dimensions (mm)

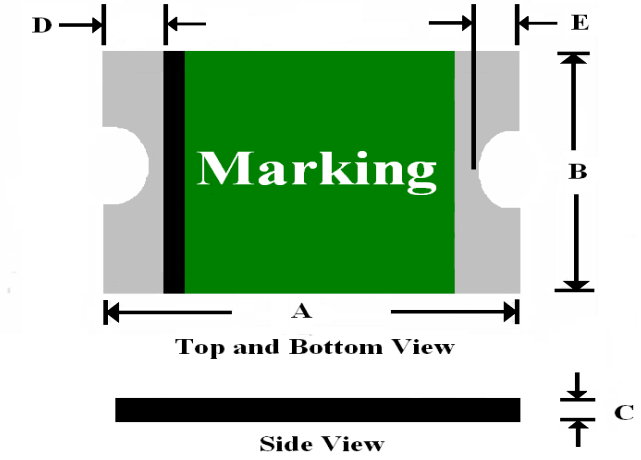

SMD1206 Resettable Fuses

Part Number	A		B		C		D		E	
	Min	Max	Min	Max	Min	Max	Min	Max	Min	Max
SMD1206-005-60	3.00	3.50	1.50	1.80	0.45	0.85	0.10	0.75	0.10	0.45
SMD1206-010-60	3.00	3.50	1.50	1.80	0.45	0.85	0.10	0.75	0.10	0.45
SMD1206-012-48	3.00	3.50	1.50	1.80	0.45	0.85	0.10	0.75	0.10	0.45
SMD1206-016-48	3.00	3.50	1.50	1.80	0.45	0.75	0.10	0.75	0.10	0.45
SMD1206-020-30	3.00	3.50	1.50	1.80	0.45	0.75	0.10	0.75	0.10	0.45
SMD1206-025-16	3.00	3.50	1.50	1.80	0.45	0.75	0.10	0.75	0.10	0.45
SMD1206-035-16	3.00	3.50	1.50	1.80	0.45	0.75	0.10	0.75	0.10	0.45
SMD1206-050-8	3.00	3.50	1.50	1.80	0.25	0.55	0.10	0.75	0.10	0.45
SMD1206-050-24	3.00	3.50	1.50	1.80	0.90	1.30	0.25	0.75	0.10	0.45
SMD1206-075-6	3.00	3.50	1.50	1.80	0.45	1.25	0.25	0.75	0.10	0.45
SMD1206-075-16	3.00	3.50	1.50	1.80	0.45	1.25	0.25	0.75	0.10	0.45
SMD1206-100-6	3.00	3.50	1.50	1.80	0.45	1.00	0.25	0.75	0.10	0.45
SMD1206-110-6	3.00	3.50	1.50	1.80	0.45	1.00	0.25	0.75	0.10	0.45
SMD1206-150-6	3.00	3.50	1.50	1.80	0.80	1.40	0.25	0.75	0.10	0.45

Typical Time-To-Trip at 23℃

Z= SMD1206-005-60
A= SMD1206-010-60
B= SMD1206-012-48
C= SMD1206-016-48
D= SMD1206-020-30
E= SMD1206-025-16
F= SMD1206-035-16
G= SMD1206-050-8/
SMD1206-050-24
H= SMD1206-075-6 /
SMD1206-075-16
I= SMD1206-100-6
J= SMD1206-110-6
K= SMD1206-150-6
L= SMD1206-200-6

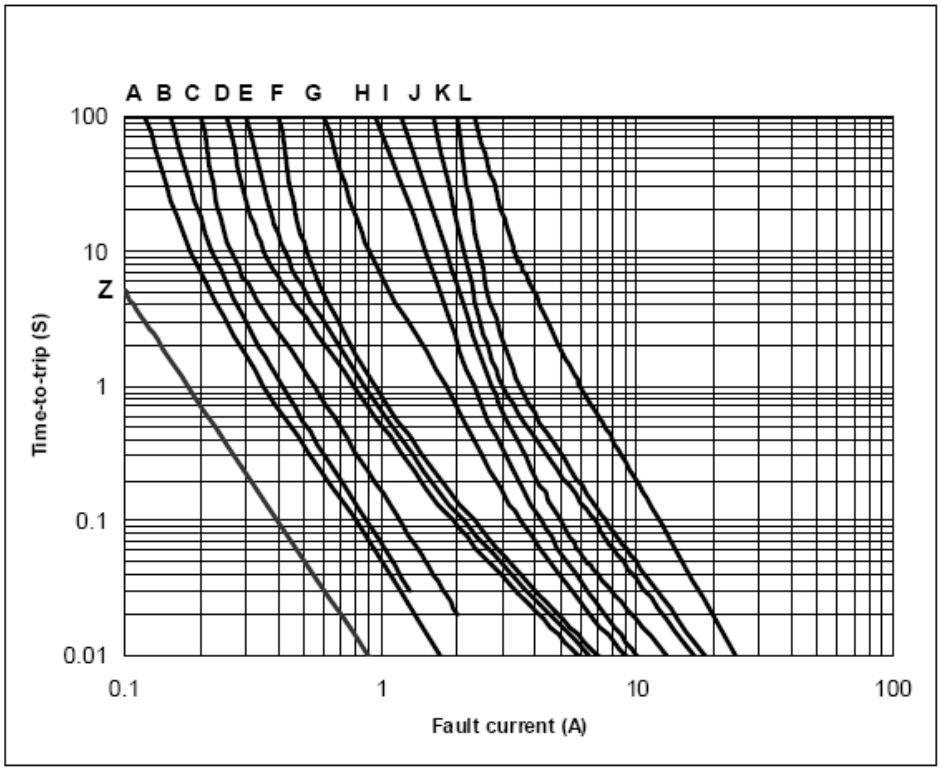

SMD0805 Resettable Fuses

RoHS Compliant & Halogen Free

RoHS 2002/95/EC | HF Halogen Free

Application : All high-density boards

Product Features : Small surface mountable, Solid state,Faster time to trip than standard SMD devices, Lower resistance than standard SMD devices

Operation Current : 0.1A~1.0A

Maximum Voltage : 6V~15V_{DC}

Temperature Range : -40℃ to 85℃

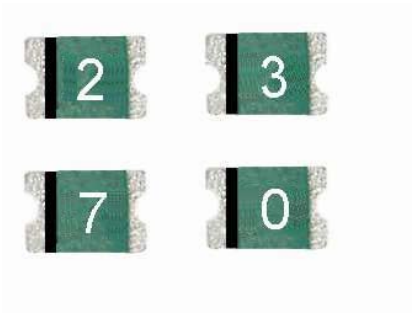

Electrical Characteristics(23℃)

Part Number	Hold Current	Trip Current	Rated Voltage	Max Current	Typ. Power	Max Time to Trip		Resistance	
						Current	Time	R_{MIN}	$R1_{MAX}$
	I_H, A	I_T, A	V_{MAX}, V_{DC}	I_{MAX}, A	Pd, W	A	Sec	Ohms	Ohms
SMD0805-010-15	0.10	0.30	15	100	0.5	0.50	1.50	0.700	6.000
SMD0805-020-9	0.20	0.50	9	100	0.5	8.00	0.02	0.400	3.500
SMD0805-035-6	0.35	0.75	6	100	0.5	8.00	0.10	0.250	1.200
SMD0805-050-6	0.50	1.00	6	100	0.5	8.00	0.10	0.150	0.850
SMD0805-075-6	0.75	1.50	6	40	0.6	8.00	0.20	0.090	0.350
SMD0805-100-6	1.00	1.95	6	40	0.6	8.00	0.30	0.060	0.210

Thermal Derating for PPTC Device at Various Ambient Temperatures

TEMPERATURE	-40℃	-20℃	0℃	23℃	30℃	40℃	50℃	60℃	70℃	85℃
DERATING %	145%	130%	116%	100%	91%	84%	76%	69%	61%	53%

SMD0805 Product Dimensions (mm)

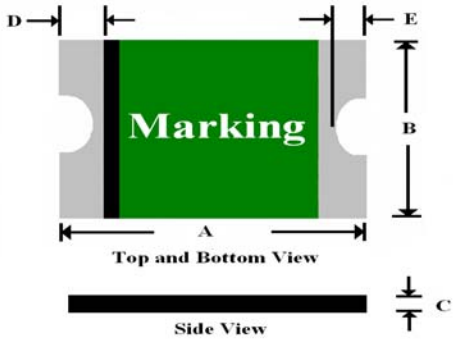

Part Number	A		B		C		D		E	
	Min	Max	Min	Max	Min	Max	Min	Max	Min	Max
SMD0805-010-15	2.00	2.30	1.20	1.50	0.55	1.00	0.20	0.60	0.10	0.45
SMD0805-020-9	2.00	2.30	1.20	1.50	0.55	1.00	0.20	0.60	0.10	0.45
SMD0805-035-6	2.00	2.30	1.20	1.50	0.45	0.75	0.20	0.60	0.10	0.45
SMD0805-050-6	2.00	2.30	1.20	1.50	0.55	1.25	0.20	0.60	0.10	0.45
SMD0805-075-6	2.00	2.30	1.20	1.50	0.55	1.25	0.20	0.60	0.10	0.45
SMD0805-100-6	2.00	2.30	1.20	1.50	0.75	1.80	0.20	0.60	0.10	0.45

SMD0805 Resettable Fuses

Typical Time-To-Trip at 23℃

A =SMD0805-010-15
B =SMD0805-020-9
C =SMD0805-035-6
D =SMD0805-050-6
E =SMD0805-075-6
F =SMD0805-100-6

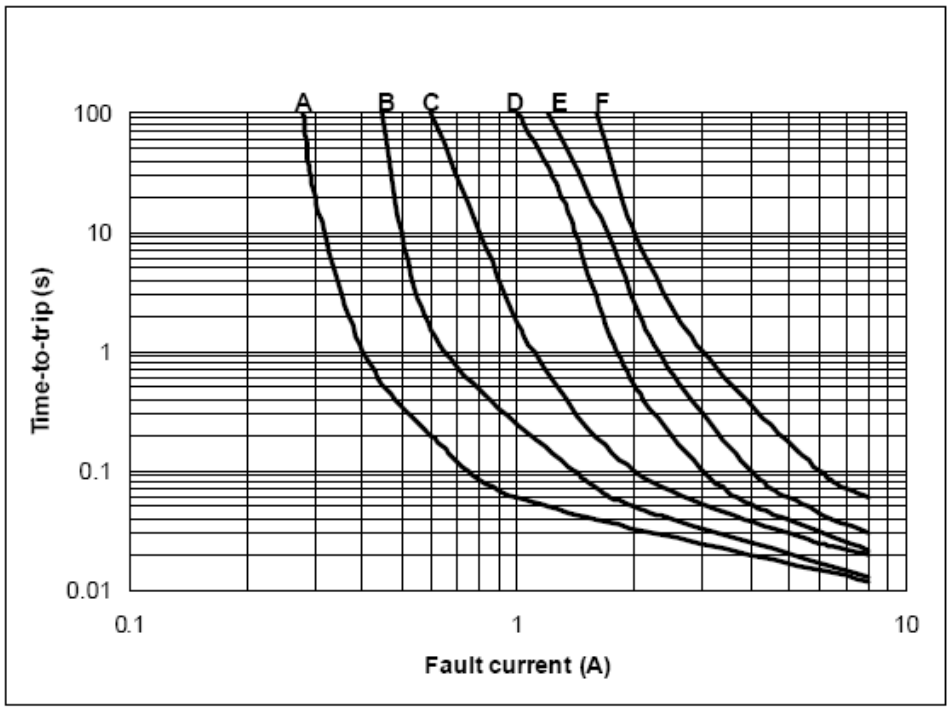

KLS

5-Passive Components-Пассивные компоненты



5-1 Varistors
5-2 PTC thermistors
5-3 NTC thermistors
5-4 Resistors permanent
5-5 Potentiometers, Variable Resistors
5-6 Crystals and Oscillators
5-7 Capacitor
5-8 Inductors, Chokes & Coils
5-9 Transformer & Accessory

More . . .

VARISTOR Series

KLS6-(ZOV HEL Overvoltage Protection) Voltage Dependent Series

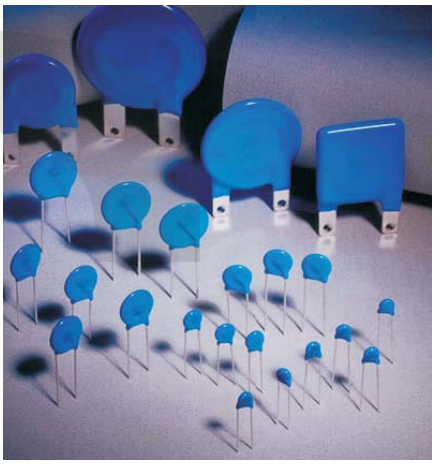

1.Applications

- Transistor, diode, IC, thyristor and trial, semi conductor switeh elecment and kinds of electronic equipuent protection
- Surge absoption in house-hold appliance, industrial electronies, relay and electro magnetic valva.
- Electrostaitc discharge noise spike suppression
- Leakage-protection switch over-voltage protection
- Thunderbolt and over-voltage protection on such telecommunication apparatus as telephone, miles-control exchanger at so on.

2.Features and technological characteristics

- Small figure, large capacitarce and energy
- Security working, operating easilyethoxyline resin-envenloped
- Response time: <25ns
- Using ambiend temperature: -40ºC~ +85ºC
- Using ambiend temperature: ⩾500MΩ
- Insulation resistance: -0.5% /ºC
- Temperature coefficience of varistor voltage: -0.5% /ºC
  chip diameter:: 5,7,10,14,20,25,32,40 mm
- Allowable tolerance of varistor voltage: K ± 10%

Dimension (Unit: mm)

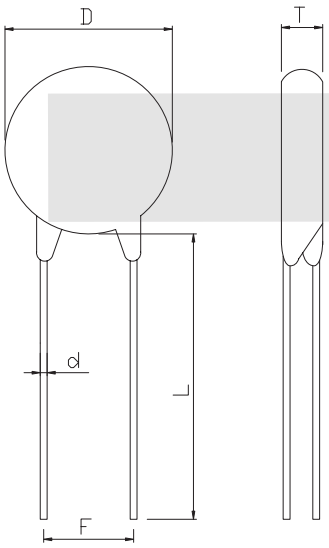

Part No.	Dimensions (mm)				
	Dmax	Tmax	Lmin	F±1	d±0.1
05D	7.5	6	20	5	0.6
07D	9	6	20	5	0.6
10D	14	8	25	7.5	0.8
14D	17	12	25	7.5	0.8
20D	25	12	25	10	1
25D	30	12	25	12.5	1
32D	39	12	25	25	1
40D	48	12	25	25	1

ORDER INFORMATION

KLS6- 05D - 180 K

- 05D — Part Number / Chip Diameter
- 180 — Varistor Voltage
- K — Allowable tolerance of varistor voltage: K ± 10%

VARISTOR Series

KLS6-(ZOV HEL Overvoltage Protection) Voltage Dependent Series

Model number	Max allowable Operating Voltage		Varistor Voltage	Max Clamping Voltage		Capacity of with standing surge current (8/20u s)		Max Energy (J)		Rated Power	Capacitance
	AC(V)	DC(V)	V0.1mA	Vp(V)	Ip(A)	1次(A)	2次(A)	10/1000us	2ms	(W)	1KHZ(pF)
KLS6-05D180K	11	14	18(16-20)	40	1	250	125	0.6	0.5	0.01	1400
KLS6-05D220K	14	18	22(20-24)	48	1	250	125	0.7	0.7	0.01	1150
KLS6-05D270K	17	22	27(24-30)	60	1	250	125	0.9	0.8	0.01	930
KLS6-05D330K	20	26	33(30-36)	73	1	250	125	1.1	0.9	0.01	760
KLS6-05D390K	25	31	39(35-43)	86	1	250	125	1.2	1.1	0.01	640
KLS6-05D470K	30	38	47(42-52)	104	1	250	125	1.5	1.4	0.01	530
KLS6-05D560K	35	45	56(50-62)	123	1	250	125	1.8	1.7	0.01	450
KLS6-05D680K	40	56	68(61-75)	145	1	250	125	2.2	2	0.01	370
KLS6-05D820K	50	65	82(74-90)	150	5	800	600	4	2.5	0.1	300
KLS6-05D101K	60	85	100(90-110)	175	5	800	600	4.1	3	0.1	250
KLS6-05D121K	75	100	120(108-132)	210	5	800	600	4.9	3.6	0.1	210
KLS6-05D151K	95	125	150(135-165)	260	5	800	600	6.5	4.5	0.1	165
KLS6-05D181K	115	150	180(162-198)	320	5	800	600	7.5	5	0.1	140
KLS6-05D201K	130	170	200(185-225)	355	5	800	600	8.5	6	0.1	125
KLS6-05D221K	140	180	220(198-242)	380	5	800	600	9	6.5	0.1	110
KLS6-05D241K	150	200	240(216-264)	415	5	800	600	10.5	7.5	0.1	100
KLS6-05D271K	175	225	270(243-297)	475	5	800	600	11	8	0.1	95
KLS6-05D301K	190	250	300(270-330)	520	5	800	600	12	8.5	0.1	85
KLS6-05D331K	210	275	330(297-363)	570	5	800	600	13	9.5	0.1	75
KLS6-05D361K	230	300	360(324-396)	620	5	800	600	16	11	0.1	70
KLS6-05D391K	250	320	390(351-429)	675	5	800	600	17	12	0.1	65
KLS6-05D431K	275	350	430(387-473)	745	5	800	600	20	13.5	0.1	60
KLS6-05D471K	300	385	470(423-517)	810	5	800	600	21	15	0.1	55
KLS6-05D511K	320	415	510(459-561)	845	5	800	600	22.5	16	0.1	50
KLS6-05D561K	350	460	560(504-616)	920	5	800	600	24	17	0.1	45
KLS6-07D180K	11	14	18(16-20)	36	2.5	500	250	2	1	0.02	2800
KLS6-07D220K	14	18	22(20-24)	43	2.5	500	250	2	1.3	0.02	2300
KLS6-07D270K	17	22	27(24-30)	53	2.5	500	250	3	1.6	0.02	1800
KLS6-07D330K	20	26	33(30-36)	65	2.5	500	250	4	1.9	0.02	1500
KLS6-07D390K	25	31	39(35-43)	77	2.5	500	250	4	2.3	0.02	1300
KLS6-07D470K	30	38	47(42-52)	93	2.5	500	250	5	2.8	0.02	1100
KLS6-07D560K	35	45	56(50-62)	110	2.5	500	250	6	3.3	0.02	890
KLS6-07D680K	40	56	68(61-75)	135	2.5	500	250	7	4.1	0.02	740
KLS6-07D820K	50	65	82(74-90)	135	10	1750	1250	10	4.8	0.25	600
KLS6-07D101K	60	85	100(90-110)	165	10	1750	1250	12	6	0.25	500
KLS6-07D121K	75	100	120(108-132)	200	10	1750	1250	13	7.3	0.25	420
KLS6-07D151K	95	125	150(135-165)	250	10	1750	1250	13	9	0.25	330
KLS6-07D181K	115	150	181(162-198)	300	10	1750	1250	16	11	0.25	280
KLS6-07D201K	130	170	200(185-225)	340	10	1750	1250	17.5	12.5	0.25	250
KLS6-07D221K	140	180	220(198-242)	360	10	1750	1250	19	13.5	0.25	230

VARISTOR Series

KLS6-(ZOV HEL Overvoltage Protection) Voltage Dependent Series

KLS6-07D241K	150	200	240 (216-264)	395	10	1750	1250	21	15	0. 25	210
KLS6-07D271K	175	225	270 (243-297)	455	10	1750	1250	24	17	0. 25	185
KLS6-07D301K	190	250	300 (270-330)	500	10	1750	1250	26	18. 5	0. 25	165
KLS6-07D331K	210	275	330 (297-363)	550	10	1750	1250	28	20	0. 25	150
KLS6-07D361K	230	300	360 (324-396)	595	10	1750	1250	32	23	0. 25	140
KLS6-07D391K	250	320	390 (351-429)	650	10	1750	1250	35	25	0. 25	130
KLS6-07D431K	275	350	430 (387-437)	710	10	1750	1250	40	27. 5	0. 25	115
KLS6-07D471K	300	385	470 (423-517)	775	10	1750	1250	42	30	0. 25	105
KLS6-07D511K	320	415	510 (495-561)	845	10	1750	1250	45	32	0. 25	100
KLS6-07D561K	350	460	560 (504-616)	920	10	1750	1250	49	35	0. 25	90
KLS6-07D621K	385	505	620 (558-682)	1025	10	1750	1250	55	38	0. 25	80
KLS6-07D681K	420	560	680 (612-748)	1120	10	1750	1250	60	42	0. 25	75
KLS6-10D180K	11	14	18 (16-20)	36	5	1000	500	3	2. 1	0. 05	5600
KLS6-10D220K	14	18	22 (20-24)	43	5	1000	500	5	2. 6	0. 05	4500
KLS6-10D270K	17	22	27 (24-30)	53	5	1000	500	6	3. 2	0. 05	3700
KLS6-10D330K	20	26	33 (30-36)	65	5	1000	500	7	3. 9	0. 05	3000
KLS6-10D390K	25	31	39 (35-43)	77	5	1000	500	9	4. 7	0. 05	2400
KLS6-10D470K	30	38	47 (42-52)	93	5	1000	500	11	5. 6	0. 05	2100
KLS6-10D560K	35	45	56 (50-62)	110	5	1000	500	13	6. 6	0. 05	1800
KLS6-10D680K	40	56	68 (61-75)	135	5	1000	500	15	8. 1	0. 05	1500
KLS6-10D820K	50	65	82 (74-90)	135	25	3500	2500	17	9. 8	0. 4	1200
KLS6-10D101K	60	85	100 (90-110)	165	25	3500	2500	18	11. 6	0. 4	1000
KLS6-10D121K	75	100	120 (108-132)	200	25	3500	2500	21	14	0. 4	830
KLS6-10D151K	95	125	150 (135-165)	250	25	3500	2500	25	18	0. 4	670
KLS6-10D181K	115	150	180 (162-198)	300	25	3500	2500	30	21	0. 4	560
KLS6-10D201K	130	170	200 (185-225)	340	25	3500	2500	35	25	0. 4	500
KLS6-10D221K	140	180	220 (198-242)	360	25	3500	2500	39	27. 5	0. 4	450
KLS6-10D241K	150	200	240 (216-264)	395	25	3500	2500	42	30	0. 4	420
KLS6-10D271K	175	225	270 (243-297)	455	25	3500	2500	49	35	0. 4	370
KLS6-10D301K	190	250	300 (270-330)	500	25	3500	2500	54	38	0. 4	330
KLS6-10D331K	210	275	330 (297-363)	550	25	3500	2500	58	42	0. 4	300
KLS6-10D361K	230	300	360 (324-396)	595	25	3500	2500	65	45	0. 4	280
KLS6-10D391K	250	320	390 (324-396)	650	25	3500	2500	70	50	0. 4	280
KLS6-10D431K	275	350	430 (387-473)	710	25	3500	2500	80	55	0. 4	230
KLS6-10D471K	300	385	470 (423-517)	775	25	3500	2500	85	60	0. 4	210
KLS6-10D511K	320	415	510 (459-561)	845	25	3500	2500	92	67	0. 4	200
KLS6-10D561K	350	460	560 (504-616)	925	25	3500	2500	92	67	0. 4	180
KLS6-10D621K	385	505	620 (558-682)	1025	25	3500	2500	92	67	0. 4	160

VARISTOR Series

KLS6-(ZOV HEL Overvoltage Protection) Voltage Dependent Series

Model number	Max allowable Operating Voltage		Varistor Voltage	Max Clamping Voltage		Capacity of with standing surge current (8/20u s)		Max Energy (J)		Rated Power	Capacitance
	AC(V)	DC(V)	V0.1mA	Vp(V)	Ip(A)	1次(A)	2次(A)	10/1000us	2ms	(W)	1KHZ(pF)
KLS6-10D681K	420	560	680(612-748)	1120	25	3500	2500	92	67	0.4	150
KLS6-10D751K	460	615	750(675-825)	1240	25	3500	2500	100	70	0.4	130
KLS6-10D781K	485	640	780(702-858)	1290	25	3500	2500	105	75	0.4	130
KLS6-10D821K	510	670	820(738-902)	1355	25	3500	2500	110	80	0.4	120
KLS6-10D911K	550	745	910(819-1001)	1500	25	3500	2500	130	90	0.4	110
KLS6-10D102K	625	825	1000(900-1100)	1650	25	3500	2500	140	100	0.4	100
KLS6-10D112K	680	895	1100(990-1210)	1815	25	3500	2500	155	110	0.4	90
KLS6-14D180K	11	14	18(16-20)	36	10	2000	1000	7	4.7	0.1	11100
KLS6-14D220K	14	18	22(20-24)	43	10	2000	1000	8	5.7	0.1	9100
KLS6-14D270K	17	22	27(24-30)	53	10	2000	1000	10	6.9	0.1	7400
KLS6-14D330K	20	26	33(30-36)	65	10	2000	1000	12	8.4	0.1	6100
KLS6-14D390K	25	31	39(35-43)	77	10	2000	1000	13	9.9	0.1	5100
KLS6-14D470K	30	38	47(42-52)	93	10	2000	1000	17	11.9	0.1	4300
KLS6-14D560K	35	45	56(50-62)	110	10	2000	1000	20	14.2	0.1	3600
KLS6-14D680K	40	56	58(61-75)	135	10	2000	1000	24	17.3	0.1	2900
KLS6-14D820K	50	65	82(74-90)	135	50	6000	5000	27	20.5	0.6	2400
KLS6-14D101K	60	85	100(90-110)	165	50	6000	5000	33	25	0.6	2000
KLS6-14D121K	75	100	120(108-132)	200	50	6000	5000	40	30	0.6	1700
KLS6-14D151K	95	125	150(135-165)	250	50	6500	5000	53	37.5	0.6	1300
KLS6-14D181K	115	150	180(162-198)	300	50	6500	5000	60	42	0.6	1100
KLS6-14D201K	130	170	200(185-225)	340	50	6500	5000	70	50	0.6	1000
KLS6-14D221K	140	180	220(198-242)	360	50	6500	5000	78	55	0.6	900
KLS6-14D241K	150	200	240(216-264)	395	50	6500	5000	84	60	0.6	830
KLS6-14D271K	175	225	270(243-297)	455	50	6500	5000	99	70	0.6	740
KLS6-14D301K	190	250	300(270-330)	500	50	6500	5000	108	75	0.6	670
KLS6-14D331K	210	275	330(297-363)	550	50	6500	5000	115	80	0.6	610
KLS6-14D361K	230	300	360(324-396)	595	50	6500	5000	130	90	0.6	560
KLS6-14D391K	250	320	390(351-429)	650	50	6500	5000	140	100	0.6	510
KLS6-14D431K	275	350	430(387-473)	710	50	6500	5000	155	110	0.6	460
KLS6-14D471K	300	385	470(423-517)	775	50	6500	5000	175	125	0.6	430
KLS6-14D511K	320	415	510(459-561)	845	50	6500	5000	190	136	0.6	390
KLS6-14D561K	350	460	560(504-616)	925	50	6500	5000	190	136	0.6	360
KLS6-14D621K	385	505	620(558-682)	1025	50	6500	5000	190	136	0.6	320
KLS6-14D681K	420	560	680(612-748)	1120	50	6500	5000	190	136	0.6	290
KLS6-14D751K	460	615	750(675-825)	1240	50	6500	5000	210	150	0.6	270
KLS6-14D781K	485	640	780(702-858)	1290	50	6500	5000	220	155	0.6	260
KLS6-14D821K	510	670	820(738-902)	1355	50	6500	5000	235	165	0.6	240

VARISTOR Series

KLS6-(ZOV HEL Overvoltage Protection) Voltage Dependent Series

Model number	Max allowable Operating Voltage		Varistor Voltage	Max Clamping Voltage		Capacity of with standing surge current (8/20u s)		Max Energy (J)		Rated Power	Capacir tance
	AC(V)	DC(V)	V0.1mA	Vp(V)	Ip(A)	1次(A)	2次(A)	10/1000us	2ms	(W)	1KHZ(pF)
KLS6-14D911K	550	745	910(819-1001)	1500	50	6500	5000	255	180	0.6	220
KLS6-14D102K	625	825	1000(900-1100)	1650	50	6500	5000	280	200	0.6	200
KLS6-14D112K	680	895	1100(990-1210)	1815	50	6500	5000	310	220	0.6	180
KLS6-20D180K	11	14	18(16-20)	36	20	3000	2000	13	11	0.2	28500
KLS6-20D220K	14	18	22(20-24)	43	20	3000	2000	16	13	0.2	18500
KLS6-20D270K	17	22	27(24-30)	53	20	3000	2 00	19	15	0.2	13000
KLS6-20D330K	20	26	33(30-36)	65	20	3000	2000	24	20	0.2	11500
KLS6-20D390K	25	31	39(35-43)	77	20	3000	2000	28	24	0.2	8500
KLS6-20D470K	30	38	47(42-52)	93	20	3000	2000	34	30	0.2	7400
KLS6-20D560K	35	45	56(50-62)	110	20	3000	2000	41	35	0.2	6500
KLS6-20D680K	40	56	68(61-75)	135	20	3000	2000	49	40	0.2	5800
KLS6-20D820K	50	65	82(74-90)	135	100	10000	7000	56	41	1	4900
KLS6-20D101K	60	85	100(90-110)	165	100	10000	7000	70	56	1	4000
KLS6-20D121K	75	100	120(108-132)	200	100	10000	7000	85	66	1	3300
KLS6-20D151K	95	125	150(135-165)	250	100	13000	7000	106	75	1	2700
KLS6-20D181K	115	150	180(162-198)	300	100	13000	7000	130	90	1	2200
KLS6-20D201K	130	170	200(185-225)	340	100	13000	7000	140	100	1	2000
KLS6-20D221K	140	180	220(198-242)	360	100	13000	7000	155	110	1	1800
KLS6-20D241K	150	200	240(216-264)	395	100	13000	7000	168	120	1	1650
KLS6-20D271K	175	2250	270(243-297)	455	100	13000	7000	190	135	1	1500
KLS6-20D301K	190	250	300(270-330)	500	100	1300	7000	210	148	1	1300
KLS6-20D331K	210	275	330(297-363)	550	100	13000	7000	228	160	1	1200
KLS6-20D361K	230	300	360(324-396)	595	100	13000	7000	255	180	1	1100
KLS6-20D391K	250	320	390(351-429)	650	100	13000	7000	275	195	1	1000
KLS6-20D431K	275	350	430(387-473)	710	100	13000	7000	305	215	1	930
KLS6-20D471K	300	385	470(423-517)	775	100	13000	7000	350	250	1	850
KLS6-20D511K	320	415	510(459-561)	845	100	13000	7000	382	273	1	780
KLS6-20D561K	350	460	560(504-616)	925	100	10000	7000	380	273	1	710
KLS6-20D621K	385	505	620(558-682)	1025	100	10000	7000	380	273	1	650
KLS6-20D681K	420	560	680(612-748)	1120	100	10000	7000	380	273	1	600
KLS6-20D751K	460	615	750(675-825)	1240	100	10000	7000	420	300	1	530
KLS6-20D781K	480	640	780(702-858)	1290	100	10000	7000	440	310	1	510
KLS6-20D821K	510	670	820(738-902)	1355	100	10000	7000	460	325	1	500
KLS6-20D911K	550	745	910(819-1001)	1500	100	10000	7000	510	360	1	440
KLS6-20D102K	625	825	1000(900-1100)	1650	100	10000	7000	565	400	1	400
KLS6-20D112K	680	895	1100(990-1210)	1815	100	10000	7000	620	440	1	360

VARISTOR Series

KLS6-(ZOV HEL Overvoltage Protection) Voltage Dependent Series

Model number	Max allowable Operating Voltage		Varistor Voltage	Max Clamping Voltage		Capacity of with standing surge current (8/20u s)		Max Energy (J)		Rated Power	Capacitance
	AC(V)	DC(V)	V0.1mA	Vp(V)	Ip(A)	1次(A)	2次(A)	10/1000us	2ms	(W)	1KHZ(pF)
KLS6-25D201K	130	170	200(185-225)	340	150	20000	14000	190	140		3200
KLS6-25D221K	140	180	220(198-242)	360	150	20000	14000	200	150		2900
KLS6-25D241K	150	200	240(216-264)	395	150	20000	14000	220	160		2650
KLS6-25D271K	175	225	270(243-297)	455	150	20000	14000	255	180		2400
KLS6-25D301K	190	250	300(270-330)	500	150	20000	14000	275	200		2100
KLS6-25D331K	210	275	330(297-363)	550	150	20000	14000	300	220		1900
KLS6-25D361K	230	300	360(324-396)	595	150	20000	14000	330	240		1750
KLS6-25D391K	250	320	390(351-429)	650	150	20000	14000	360	260		1600
KLS6-25D431K	275	350	430(387-473)	710	150	20000	14000	380	280		1500
KLS6-25D471K	300	385	470(423-396)	775	150	20000	14000	440	300		1400
KLS6-25D511K	320	415	510(459-561)	845	150	20000	14000	440	300		1250
KLS6-25D561K	350	460	560(504-616)	925	150	20000	14000	440	300		1150
KLS6-25D621K	385	505	620(558-682)	1025	150	20000	14000	440	300		1050
KLS6-25D681K	420	560	680(612-748)	1120	150	20000	14000	460	320		950
KLS6-25D751K	460	615	750(675-825)	1240	150	20000	14000	510	350		850
KLS6-25D781K	485	640	780(702-858)	1290	150	20000	14000	530	360		850
KLS6-25D821K	510	670	820(738-902)	1355	150	20000	14000	570	380		800
KLS6-25D911K	550	745	910(819-1001)	1500	150	20000	14000	620	430		700
KLS6-25D102K	625	825	1000(900-1100)	1650	150	20000	14000	685	460		650
KLS6-25D112K	680	895	1100(990-1210)	1815	150	20000	14000	770	500		600
KLS6-32D201K	130	170	200(185-225)	340	200	25000	20000	210			5200
KLS6-32D241K	150	200	240(216-264)	395	200	25000	20000	240			5100
KLS6-32D271K	175	225	270(243-297)	455	200	25000	20000	255			4800
KLS6-32D331K	210	275	330(297-363)	550	200	25000	20000	300			4300
KLS6-32D361K	230	300	360(324-396)	595	200	25000	20000	315			3900
KLS6-32D391K	250	320	390(351-429)	650	200	25000	20000	330			3200
KLS6-32D431K	275	350	430(387-473)	710	200	25000	20000	360			3100
KLS6-32D471K	300	385	470(423-517)	775	200	25000	20000	380			2800
KLS6-32D511K	320	415	510(459-561)	845	200	25000	20000	430			2700
KLS6-32D621K	385	505	620(558-682)	1025	200	25000	20000	470			2400
KLS6-32D681K	420	560	680(612-748)	1120	200	25000	20000	495			2200
KLS6-32D751K	460	615	750(657-825)	1240	200	25000	20000	520			2000
KLS6-32D781K	485	640	780(702-858)	1290	200	25000	20000	550			1900
KLS6-32D821K	510	670	820(738-902)	1355	200	25000	20000	580			1800
KLS6-32D911K	550	745	910(819-1001)	1500	200	25000	20000	620			1300
KLS6-32D951K	575	765	950(855-1045)	1570	200	25000	20000	650			1200
KLS6-32D102K	625	825	1000(900-1100)	1650	200	25000	20000	685			1100
KLS6-32D112K	680	895	1100(990-1210)	1815	200	25000	20000	750			1000

VARISTOR Series

KLS6-(ZOV HEL Overvoltage Protection) Voltage Dependent Series

Model number	Max allowable Operating Voltage		Varistor Voltage	Max Clamping Voltage		Capacity of with standing surge current (8/20u s)		Max Energy (J)		Rated Power	Capacir tance
	AC(V)	DC(V)	V0.1mA	Vp(V)	Ip(A)	1次(A)	2次(A)	10/1000us	2ms	(W)	1KHZ(pF)
KLS6-40D201K	130	170	200(185-225)	395	250	40000	25000	310			8400
KLS6-40D241K	150	200	240(216-264)	455	250	40000	25000	360			8000
KLS6-40D271K	175	225	270(243-297)	550	250	40000	25000	390			7600
KLS6-40D331K	210	275	330(297-363)	595	250	40000	25000	460			6700
KLS6-40D361K	230	300	360(324-396)	650	250	40000	25000	475			6200
KLS6-40D391K	250	320	390(351-429)	710	250	40000	25000	490			5100
KLS6-40D431K	275	350	430(387-473)	775	250	40000	25000	550			4900
KLS6-40D471K	300	385	470(423-517)	845	250	40000	25000	600			4300
KLS6-40D511K	320	415	510(459-561)	1025	250	40000	25000	640			4200
KLS6-40D621K	385	505	620(558-682)	1120	250	40000	25000	720			3800
KLS6-40D681K	420	560	680(612-748)	1240	250	40000	25000	750			3500
KLS6-40D751K	460	615	750(675-825)	1290	250	40000	25000	780			3200
KLS6-40D781K	485	640	780(702-858)	1355	250	40000	25000	820			3000
KLS6-40D821K	510	670	820(738-902)	1500	250	40000	25000	900			2900
KLS6-40D911K	550	745	910(819-1001)	1570	250	40000	25000	960			2200
KLS6-40D951K	575	765	950(855-1045)	1650	250	40000	25000	1000			2000
KLS6-40D102K	625	825	1000(900-1100)	1815	250	40000	25000	1055			1800
KLS6-40D112K	680	895	1100(990-1210)	340	250	40000	25000	1155			1600
KLS6-53D201K	130	170	200(185-225)	395	500	70000	50000	550			15000
KLS6-53D241K	150	200	240(216-264)	455	500	70000	50000	650			12500
KLS6-53D271K	175	225	270(243-297)	550	500	70000	50000	700			11000
KLS6-53D331K	210	275	330(297-363)	595	500	70000	50000	825			9000
KLS6-53D361K	230	300	360(324-396)	650	500	70000	50000	850			8500
KLS6-53D391K	250	320	390(351-429)	710	500	70000	50000	885			7500
KLS6-53D431K	275	350	430(387-473)	775	500	70000	50000	990			7000
KLS6-53D471K	300	385	470(423-517)	845	500	70000	50000	1080			6500
KLS6-53D511K	320	415	510(459-561)	1025	500	70000	50000	1150			6000
KLS6-53D621K	380	505	620(558-682)	1120	500	70000	50000	1300			5000
KLS6-53D681K	420	560	685(612-748)	1240	500	70000	50000	1350			4500
KLS6-53D751K	460	615	750(675-825)	1290	500	70000	50000	1400			4000
KLS6-53D781K	485	640	780(702-858)	1355	500	70000	50000	1450			3900
KLS6-53D821K	510	670	820(738-902)	1500	500	70000	50000	1600			3700
KLS6-53D911K	550	745	910(819-1001)	1570	500	70000	50000	1700			3300
KLS6-53D951K	575	765	950(855-1045)	1650	500	70000	50000	1800			3200
KLS6-53D102K	625	825	1000(900-1100)	18515	500	70000	50000	1890			3000
KLS6-53D112K	680	895	1100(990-1210)	1980	500	70000	50000	2050			2700
KLS6-53D122K	750	990	1200(1080-1320)	2310	500	70000	50000	2050			2500
KLS6-53D142K	880	1140	1400(1260-1540)	2640	500	70000	50000	2300			2150
KLS6-53D162K	1000	1280	1600(1440-1760)		500	70000	50000	2500			1900

Features

1. RoHS compliant
2. High surge suppress capability
3. EIA size 0402 ~ 2220
4. Operating voltage: 5.5 ~ 85 Vdc
5. Bidirectional and symmetrical V/I characteristics
6. Multilayer ceramic construction technology
7. Variable capacitance
8. -40 ~ +125°C operating temperature range



Recommended Applications

1. Power system
2. Mother board / notebook
3. Scanner
4. Handheld devices
5. Digital video
6. Set-top box

Outlook and Dimension（ Unit：mm）

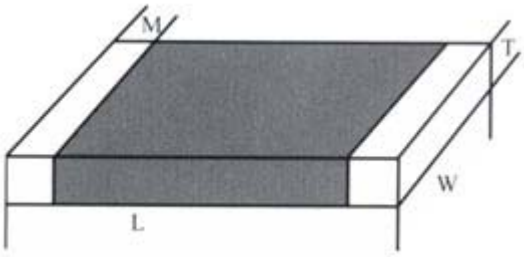

Type	L	W	T	MB
0402	1.0 ± 0.10	0.5 ± 0.10	0.5 ± 0.20	0.30+0.2/-0.1
0603	1.6 ±0.15	0.8 ±0.10	0.8 ± 0.20	0.30+0.2/-0.1
0805	2.0 ± 0.20	1.25 ±0.15	0.8 ± 0.20	0.30+0.2/-0.1
1206	3.2 ± 0.20	1.6 ± 0.15	1.2 ± 0.20	0.40+0.2/-0.2
1210	3.2 ± 0.20	2.5 ± 0.20	1.2 ± 0.20	0.40+0.2/-0.1
1812	4.5 ± 0.20	3.20 ±0.20	1.3 ± 0.20	0.50+0.2/-0.1
2220	5.7 ± 0.20	5.00 ±0.20	1.5 ± 0.20	0.80+0.2/-0.1
3220	8.0 ± 0.20	5.00 ±0.20	2.0 ± 0.20	0.80+0.2/-0.1
4032	10.0 ± 0.20	8.00 ±0.20	2.0 ± 0.20	0.80+0.2/-0.1
4840	12.0 ± 0.20	10.00 ±0.20	2.5 ± 0.20	0.80+0.2/-0.1

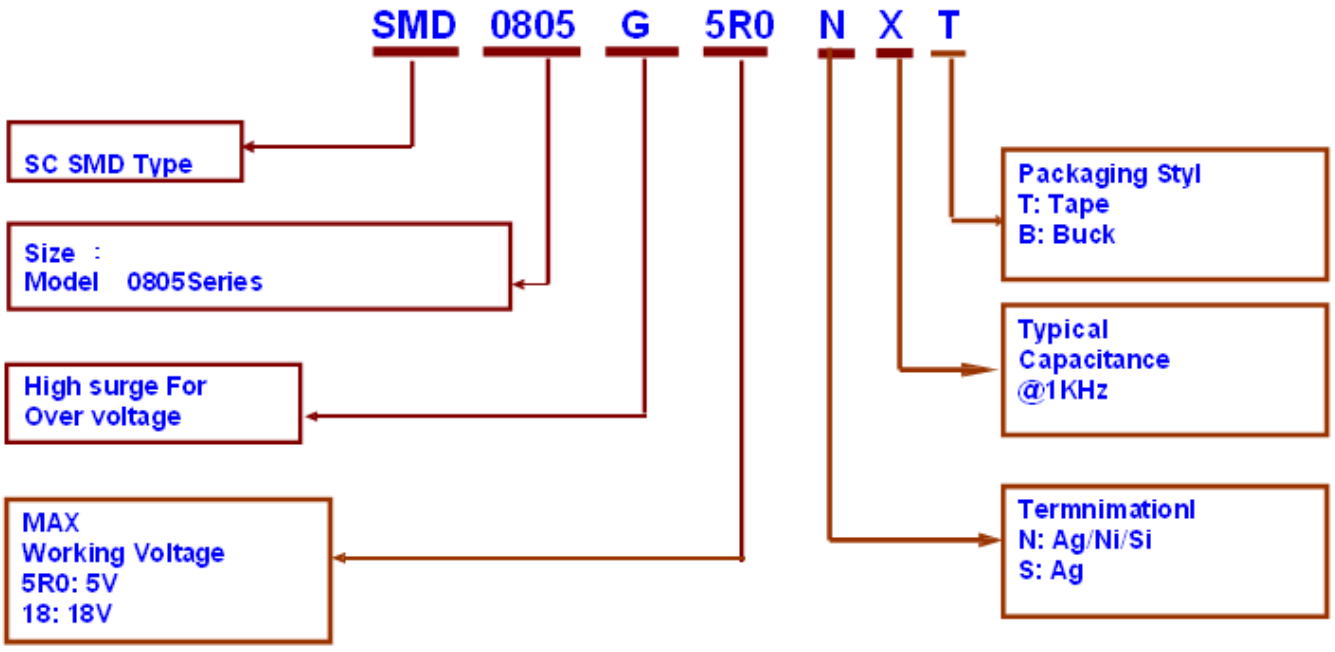

SMD0402~SMD1210 Serials

Part Number	Max. Operating Voltage		Varistor Voltage (@ 1mA DC)		Max. Clamping Voltage	Max. Surge Current	Max. Energy	Typical Capacitance
	Vac	Vdc	V1mA(V)		Vc(V)	Ip(A)	Et(J)	C_P(pF)
			Vb(V)		8/20μs 1A	8/20μs	10/1000μs	1KHz/1V
SMD0402G3R3NXT	2.5	3.3	5	±20%	10	10	0.02	by user
SMD0402G5R6NXT	4	5.6	8	±20%	15.5	10	0.02	by user
SMD0402G8R0NXT	5.7	8	12	±20%	25	10	0.05	by user
SMD0402G9R0NXT	6	9	12	±10%	25	10	0.05	by user
SMD0402G110NXT	7.8	11	14	±15%	35	10	0.05	by user
SMD0402G140NXT	10	14	18	±15%	45	10	0.05	by user
SMD0405G180NXT	14	18	25	±15%	53	10	0.05	by user
SMD0405G220NXT	17	22	27	±10%	58	10	0.05	by user
SMD0402G260NXT	20	26	33	±10%	60	10	0.05	by user
SMD0402G300NXT	25	30	39	±10%	72	10	0.05	by user
SMD0402G380NXT	30	38	47	±10%	85	10	0.05	by user
SMD0603G3R0NXT	2.2	3	4.8	±25%	10	20	0.05	by user
SMD0603G3R3NXT	2.5	3.3	5	±20%	10	20	0.05	by user
SMD0603G5R6NXT	4	5.6	8	±20%	15.5	20	0.05	by user
SMD0603G8R0NXT	5.7	8	12	±20%	25	30	0.1	by user
SMD0603G9R0NXT	6	9	13	±20%	25	30	0.1	by user
SMD0603G110NXT	8	11	15	±15%	28	30	0.1	by user
SMD0603G120NXT	9	12	16	±15%	30	30	0.1	by user
SMD0603G140NXT	10	14	18	±15%	35	30	0.1	by user
SMD0603G160NXT	12	16	22	±15%	37	30	0.1	by user
SMD0603G180NXT	14	18	25	±10%	52	30	0.1	by user
SMD0603G220NXT	15	22	27	±10%	58	30	0.1	by user
SMD0603G260NXT	20	26	33	±10%	65	30	0.1	by user
SMD0603G300NXT	22	30	39	±10%	72	30	0.1	by user
SMD0603G380NXT	30	38	47	±10%	81	30	0.1	by user
SMD0603G450NXT	35	45	56	±10%	100	30	0.1	by user
SMD0805G3R0NXT	2.2	3	4.8	±25%	10	30	0.1	by user
SMD0805G3R3NXT	2.5	3.3	5	±20%	10	30	0.1	by user
SMD0805G5R6NXT	4	5.6	8	±20%	15.5	30	0.1	by user
SMD0805G8R0NXT	5.7	8	12	±20%	25	30	0.1	by user
SMD0805G9R0NXT	6	9	13	±20%	25	30	0.1	by user
SMD0805G110NXT	8	11	15	±15%	28	35	0.1	by user
SMD0805G120NXT	9	12	16	±15%	30	35	0.1	by user
SMD0805G140NXT	10	14	18	±15%	35	40	0.2	by user
SMD0805G160NXT	12	16	22	±15%	37	40	0.2	by user
SMD0805G180NXT	14	18	25	±10%	52	40	0.2	by user
SMD0805G220NXT	15	22	27	±10%	58	40	0.2	by user
SMD0805G260NXT	20	26	33	±10%	65	40	0.2	by user
SMD0805G300NXT	22	30	39	±10%	72	40	0.2	by user
SMD0805G380NXT	30	38	47	±10%	81	40	0.2	by user
SMD0805G450NXT	35	45	56	±10%	100	40	0.2	by user
SMD1206G3R0NXT	2.2	3	4.8	±25%	10	40	0.2	by user
SMD1206G3R3NXT	2.5	3.3	5	±20%	10	40	0.2	by user
SMD1206G5R6NXT	4	5.6	8	±20%	15.5	40	0.2	by user

SMD1206G8R0NXT	5.7	8	12	±20%	25	40	0.2	by user
SMD1206G9R0NXT	6	9	13	±20%	25	50	0.2	by user
SMD1206G110NXT	8	11	15	±15%	28	50	0.2	by user
SMD1206G120NXT	9	12	16	±15%	30	50	0.2	by user
SMD1206G140NXT	10	14	18	±15%	35	60	0.2	by user
SMD1206G160NXT	12	16	22	±15%	37	60	0.2	by user
SMD1206G180NXT	14	18	25	±10%	52	80	0.3	by user
SMD1206G220NXT	15	22	27	±10%	58	80	0.3	by user
SMD1206G260NXT	20	26	33	±10%	65	100	0.4	by user
SMD1206G300NXT	22	30	39	±10%	72	100	0.4	by user
SMD1206G380NXT	30	38	47	±10%	81	100	0.4	by user
SMD1206G400NXT	31	40	53	±10%	90	100	0.4	by user
SMD1206G450NXT	32	45	56	±10%	100	100	0.4	by user
SMD1206G480NXT	34	48	62	±10%	110	120	0.5	by user
SMD1206G560NXT	40	56	68	±10%	136	120	0.5	by user
SMD1206G750NXT	56	75	100	±10%	150	130	0.6	by user
SMD1210G5R6NXT	4	5.6	8	±20%	15.5	80	0.2	by user
SMD1210G8R0NXT	5.7	8	12	±20%	25	100	0.5	by user
SMD1210G9R0NXT	6	9	13	±20%	25	100	0.5	by user
SMD1210G110NXT	8	11	15	±15%	28	100	0.5	by user
SMD1210G120NXT	9	12	16	±15%	30	100	0.5	by user
SMD1210G140NXT	10	14	18	±15%	35	150	1	by user
SMD1210G160NXT	12	16	22	±15%	37	150	1	by user
SMD1210G180NXT	14	18	25	±10%	52	150	1	by user
SMD1210G220NXT	15	22	27	±10%	58	180	1	by user
SMD1210G260NXT	20	26	33	±10%	65	200	1.2	by user
SMD1210G300NXT	22	30	39	±10%	72	200	1.2	by user
SMD1210G380NXT	30	38	47	±10%	81	200	1.2	by user
SMD1210G400NXT	31	40	53	±10%	90	200	1.5	by user
SMD1210G450NXT	32	45	56	±10%	100	200	1.5	by user
SMD1210G480NXT	34	48	62	±10%	110	250	2	by user
SMD1210G560NXT	40	56	68	±10%	136	250	2	by user
SMD1210G750NXT	56	75	100	±10%	200	250	2	by user

SMD1812~SMD4820 Serials

Part Number	Max. Operating Voltage		Varistor Voltage (@ 1mA DC)		Max. Clamping Voltage	Max. Surge Current	Max. Energy	Typical Capacitance
	Vac	Vdc	V1mA(V)		Vc(V)	Ip(A)	Et(J)	C_P(pF)
			Vb(V)		8/20μs 1A	8/20μs	10/1000μs	1KHz/1V
SMD1812G180N	14	18	25	±10%	38	400	1	by user
SMD1812G220N	17	22	27	±10%	45	400	1	by user
SMD1812G250N	20	26	33	±10%	45	400	1	by user
SMD1812G280N	23	28	38	±10%	45	400	1	by user
SMD1812G300N	25	30	39	±10%	55	400	1	by user
SMD1812G380N	30	38	47	±10%	77	400	1	by user
SMD1812G480N	34	48	62	±10%	80	400	1	by user
SMD1812G560N	40	56	68	±10%	120	500	2	by user
SMD1812G750N	55	75	100	±10%	120	500	2	by user
SMD1812G850N	60	85	100	±10%	160	500	2	by user

SMD1812G101N	75	100	120	±10%	250	500	2.5	by user
SMD2220G180N	14	18	25	±10%	38	600	2	by user
SMD2220G250N	20	26	33	±10%	45	600	2	by user
SMD2220G300N	25	30	39	±10%	55	600	2	by user
SMD2220G380N	30	38	47	±10%	77	600	2	by user
SMD2220G470N	34	47	62	±10%	85	600	2	by user
SMD2220G101N	75	100	120	±10%	200	600	2.5	by user
SMD3220G101N	75	100	120	±10%	200	500	3	by user
SMD3220G201N	150	200	240	±10%	360	500	3	by user
SMD3220G221N	175	220	270	±10%	380	500	3	by user
SMD3220G321N	250	320	390	±10%	650	500	3	by user
SMD3220G351N	275	350	430	±10%	710	500	4.5	by user
SMD3220G381N	300	380	470	±10%	775	500	5	by user
SMD4032G101N	75	100	120	±10%	200	500	5	by user
SMD4032G321N	250	320	390	±10%	650	500	5	by user
SMD4032G351N	275	350	430	±10%	710	500	5	by user
SMD4032G381N	300	380	470	±10%	775	500	5	by user
SMD4840G101N	75	100	120	±10%	200	500	5	by user
SMD4840G321N	250	320	390	±10%	650	500	5	by user
SMD4840G351N	275	350	430	±10%	710	500	5	by user
SMD4840G381N	300	380	470	±10%	775	500	5	by user

Ⅰ Normal Capacitance

Features

1. RoHS compliant
2. Low clamping voltage
3. EIA size 0402, 0603, 0805
4. Operating voltage: 5.5 ~ 30 Vdc
5. Bidirectional and symmetrical V/I characteristics
6. Multilayer ceramic construction technology
7. Rate for ESD protection
8. Variable capacitance
9. -40 ~ +125℃ operating temperature range



Recommended Applications

1. Cellular phones
2. I/O port for mother board
3. LCD module
4. Data line (USB, RS232)
5. PDA
6. Bluetooth headset

Outlook and Dimension（ Unit：mm）

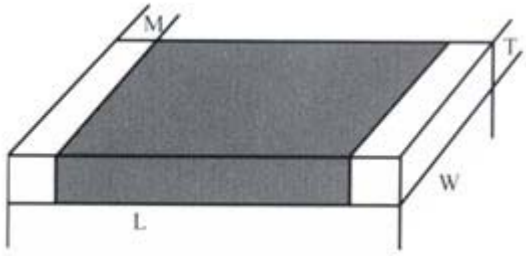

Type	L	W	T	MB
0402	1.0 ± 0.10	0.5 ± 0.10	0.5 ± 0.20	0.30+0.2/-0.1
0603	1.6 ±0.15	0.8 ±0.10	0.8 ± 0.20	0.30+0.2/-0.1

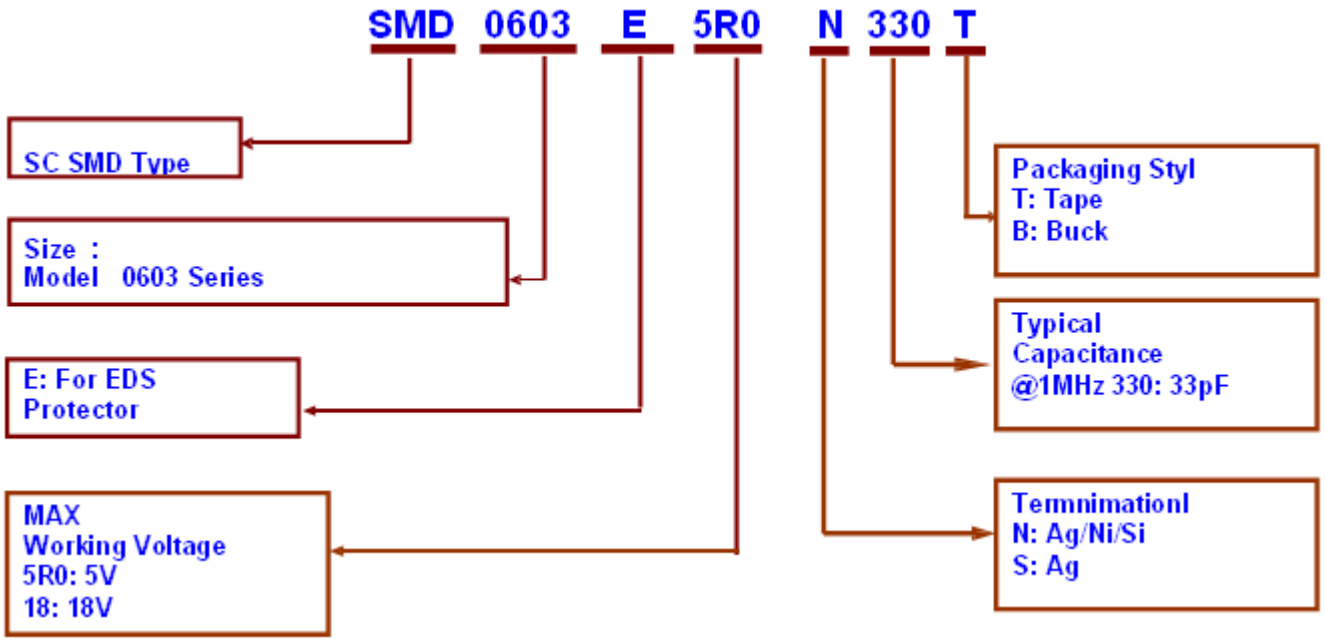

Part Number	Max. Operating Voltage		Varistor Voltage (@ 1mA DC)		Max. Clamping Voltage	Typical Capacitance		ESD TEST
	Vac	Vdc	V1mA(V)		Vc(V)	C_N(pF)	△ C_P(pF)	IEC61000-4-2
			Vb(V)		8/20μs 1A	@1MHZ		
SMD0402E180N1R5T	14	18	46	60	110	1.5	±2pF	ESD Contact:8kv ESD Air: 15kv
SMD0402E180N3R0T	14	18	22	34	58	3	±2pF	
SMD0402E180N5R0T	14	18	22	34	58	5	±2pF	
SMD0402E180N100T	14	18	22	34	58	10	±30%	
SMD0402E180N150T	14	18	22	34	58	15	±30%	
SMD0402E260N5R0T	20	26	46	60	110	5	±2pF	
SMD0402E420N3R0T	30	42	46	75	135	3	±2pF	
SMD0603E5R0N5R0T	4	5	22	34	58	5	±2pF	
SMD0603E9R0N3R0T	6	9	36	60	110	3	±2pF	
SMD0603E120N5R0T	9	12	30	40	70	5	±2pF	
SMD0603E180N3R0T	14	18	36	60	110	3	±2pF	
SMD0603E180N7R0T	14	18	36	60	110	7	±2pF	
SMD0603E180N120T	14	18	22	34	58	12	±30%	
SMD0603E180N150T	14	18	22	34	58	15	±30%	
SMD0603E180N220T	14	18	22	34	58	22	±30%	

Ⅱ Super Low Capacitance

Features

1. RoHS compliant and lead-free
2. EIA size 0402, 0603
3. Ultra-low capacitance (<0.2pF) and low leakage current (<0.05uA)
4. Fast response time (<1ns)
5. Single-line, bi-directional device
6. Rate for ESD protection and pass IEC 61000-4-2 level 4 test



Recommended Applications

1. High-Speed Data Lines (HDMI, Serial ATA, USB, IEEE1394)
2. Antenna Circuit (Cellular phone, GPS…)
3. Digital Cameras
4. Set-Top Boxes
5. Printer Ports

Part Number	Max. Operating Voltage		Typical Trigger Voltage	Max. Clamping Voltage	Typical Capacitance	Max. Leakage Current @VDC	ESD TEST
	Vac	Vdc	VV	Vc(V)	CN(pF)	IL	IEC61000-4-2
				8/20μs	@1MHZ	(nA)	
SMD0402ESD120T	10	12	300	35	＜0.15	＜10	ESD Contact:8kv ESD Air: 15kv
SMD0402ESD140T	12	14	500	50	＜0.15	＜10	
SMD0603ESD6R0T	5	6	350	35	＜0.15	＜10	
SMD0603ESD240T	18	24	125	35	＜0.15	＜10	
SMD0603ESD240T1	18	24	500	50	＜0.15	＜10	
SMD0603ESD300T	25	30	300	35	＜0.15	＜10	

Ⅰ Super Low Capacitance

Features

1. RoHS compliant and lead-free
2. EIA size 0402, 0603
3. Ultra-low capacitance (<0.2pF) and low leakage current (<0.05uA)
4. Fast response time (<1ns)
5. Single-line, bi-directional device
6. Rate for ESD protection and pass IEC 61000-4-2 level 4 test



Recommended Applications

1. High-Speed Data Lines (HDMI, Serial ATA, USB, IEEE1394)
2. Antenna Circuit (Cellular phone, GPS…)
3. Digital Cameras
4. Set-Top Boxes
5. Printer Ports

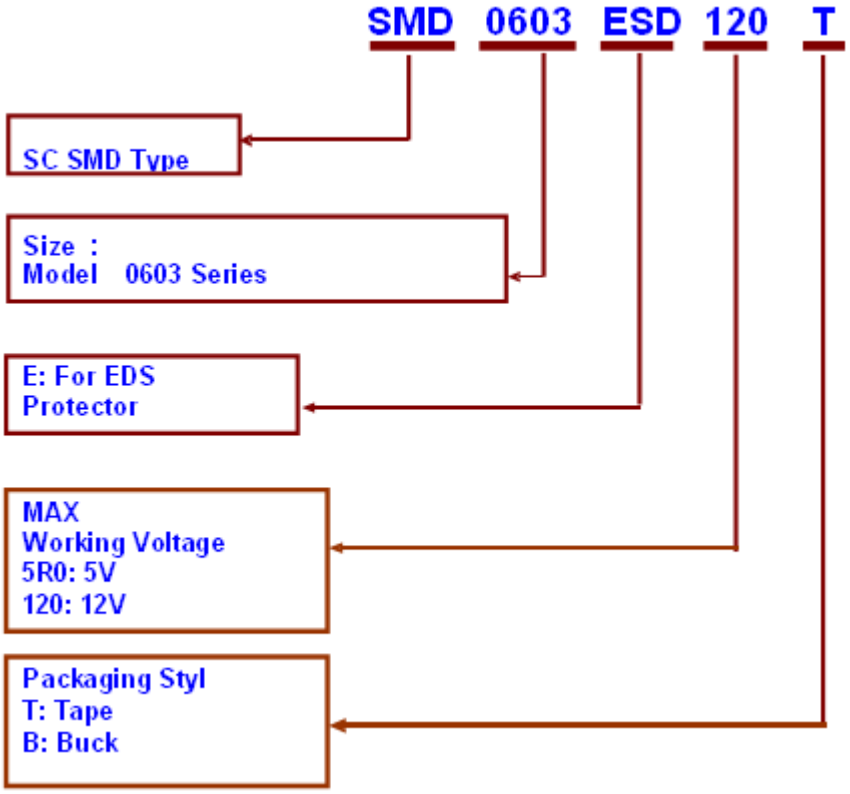

Part Number	Max. Operating Voltage		Typical Trigger Voltage	Max. Clamping Voltage	Typical Capacitance	Max. Leakage Current @VDC	ESD TEST
	Vac	Vdc	VV	Vc(V) 8/20μs	CN(pF) @1MHZ	IL (nA)	IEC61000-4-2
SMD0402ESD120T	10	12	300	35	＜0.15	＜10	ESD Contact:8kv ESD Air: 15kv
SMD0402ESD140T	12	14	500	50	＜0.15	＜10	
SMD0603ESD6R0T	5	6	350	35	＜0.15	＜10	
SMD0603ESD240T	18	24	125	35	＜0.15	＜10	
SMD0603ESD240T1	18	24	500	50	＜0.15	＜10	
SMD0603ESD300T	25	30	300	35	＜0.15	＜10	

Ⅱ Normal Capacitance

Features

1. RoHS compliant
2. Low clamping voltage
3. EIA size 0402, 0603, 0805
4. Operating voltage: 5.5 ~ 30 Vdc
5. Bidirectional and symmetrical V/I characteristics
6. Multilayer ceramic construction technology
7. Rate for ESD protection
8. Variable capacitance
9. -40 ~ +125℃ operating temperature range



Recommended Applications

1. Cellular phones
2. I/O port for mother board
3. LCD module
4. Data line (USB, RS232)
5. PDA
6. Bluetooth headset

Outlook and Dimension（ Unit：mm）

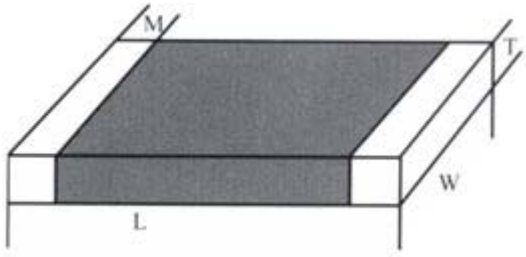

Type	L	W	T	MB
0402	1.0 ± 0.10	0.5 ± 0.10	0.5 ± 0.20	0.30+0.2/-0.1
0603	1.6 ±0.15	0.8 ±0.10	0.8 ± 0.20	0.30+0.2/-0.1

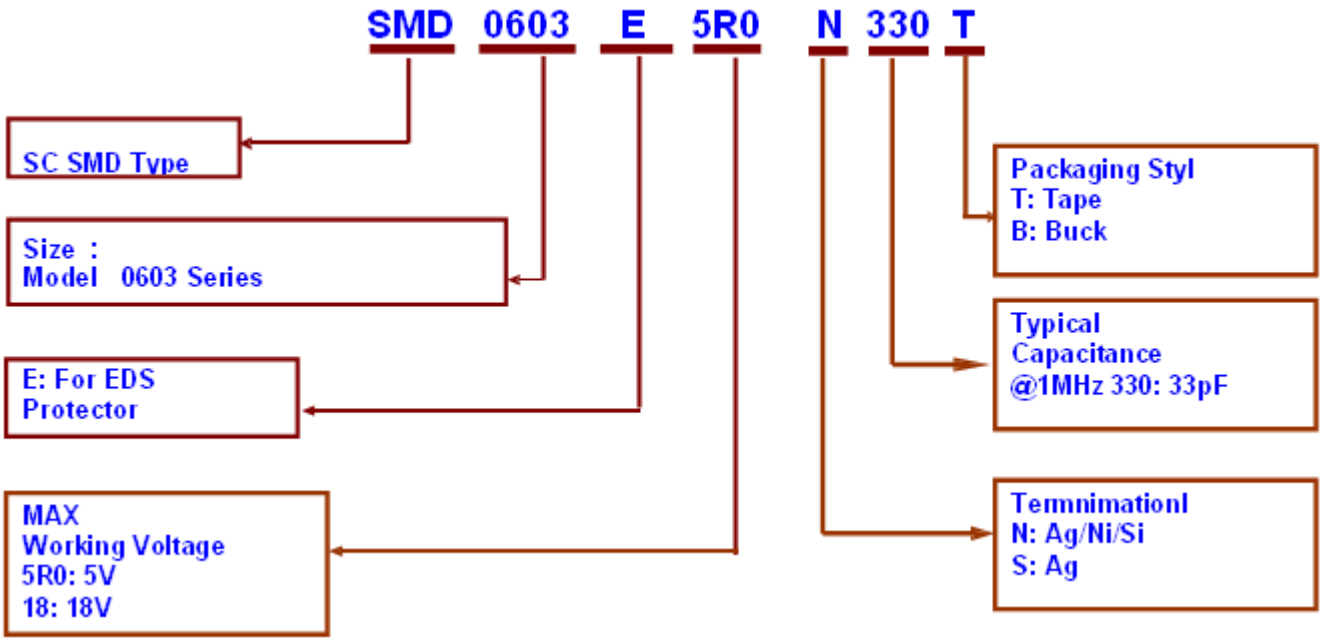

Part Number	Max. Operating Voltage		Varistor Voltage (@ 1mA DC)		Max. Clamping Voltage	Typical Capacitance		ESD TEST
	Vac	Vdc	V1mA(V)		Vc(V)	C_N(pF)	△ C_P(pF)	IEC61000-4-2
			Vb(V)		8/20μs 1A	@1MHZ		
SMD0402E180N1R5T	14	18	46	60	110	1.5	±2pF	ESD Contact:8kv ESD Air: 15kv
SMD0402E180N3R0T	14	18	22	34	58	3	±2pF	
SMD0402E180N5R0T	14	18	22	34	58	5	±2pF	
SMD0402E180N100T	14	18	22	34	58	10	±30%	
SMD0402E180N150T	14	18	22	34	58	15	±30%	
SMD0402E260N5R0T	20	26	46	60	110	5	±2pF	
SMD0402E420N3R0T	30	42	46	75	135	3	±2pF	
SMD0603E5R0N5R0T	4	5	22	34	58	5	±2pF	
SMD0603E9R0N3R0T	6	9	36	60	110	3	±2pF	
SMD0603E120N5R0T	9	12	30	40	70	5	±2pF	
SMD0603E180N3R0T	14	18	36	60	110	3	±2pF	
SMD0603E180N7R0T	14	18	36	60	110	7	±2pF	
SMD0603E180N120T	14	18	22	34	58	12	±30%	
SMD0603E180N150T	14	18	22	34	58	15	±30%	
SMD0603E180N220T	14	18	22	34	58	22	±30%	

PTC Thermistor Series

KLS6-MZ11A Filament Preheat PTC Thermistor Series



1. Applications

It can be applied in the electronic ballast of kinds of fluorescent lamps and electronic energy-saving lamps.No necessity to modify the circuitry.If proper thermistor is parallel connected on the two ends of resonant capacitor of lamps, cold startup of electronic ballast and electronic energy-saving lamps will turn into the Preheatstartup which can make the Preheatingtime reach 0.4-2S and extend the life of service to three times of the primary.

2. Characteristics

Execution utilizing the characteristic of PTC material, Small size of product, High voltage resistance, Longevity of service, Low power when normally working.

3. Application principal

Preheatstartup principium of PTC thermistor is showed in following chart: At initial moment of turning on the switch, R_t is on normal temperature state, its resistance is far below that of C_2, and the current passes through C_1 and R_t and comes into being loop warming up the Filamnet, About 0.4-2s later, the temperature of R_t exceeds courier temperature T_c and jumps into the state of high resistance far over that of C_2, and the current passes through C_1, C_2, comes into being loop and results in LC resonance which generates high voltage to light the lamps.

4. Dimension (Unit: mm)

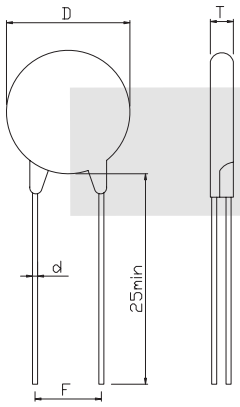

Type Code	Dmax	Tmax	F 1	d 0.05
S	4	4.5	5	0.5
L	5	4.5	5	0.6
A	6	4.5	5	0.6
HV	6	5	5	0.6
B	8	4.5	5	0.6
BHV	8	5	5	0.6
LV	9	4.5	5	0.6
M	11.5	5	5	0.6
SL	14.5	5	7.5	0.8
ML	18.5	5	7.5	0.8
LL	21	5	7.5	0.8

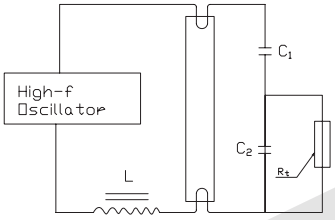

ORDER INFORMATION

KLS6-MZ11A - 75 - HV -XXX N U

- Part Number
- Filament Preheat PTC Thermistor Mz11A Series
- Temperature of switch: 50-50°C 75-75°C 85-85°C 105-105°C 120-120°C
- Type code: S-small type A-Basic type HV-High voltage
- Rated zero power resistance 102=1000Ω 68R=68Ω
- Tol.of resistance: N-± 30% V-± 25% M-± 20% K-± 10% X-else
- Shape of lead: U-in-formed S-straight A-asis wind

PTC Thermistor Series

KLS6-MZ11A Filament Preheat PTC Thermistor Series

Main Techno-Parameter

No.	Part No.	Rated Zero-power Resistance Rn (Ω)	Break Down Vol. (Vac)	Max. W.C.I max (mA)	Switch Temp. Tsw (℃)	Dimensions (mm)		
						Dmax	Tmax	d
1	MZ11A-50S68RNU	68±30%	360	200	50±7	4	4.5	0.5
2	MZ11A-50S101NU	100±30%	400					
3	MZ11A-50S151NU	150±30%	400					
4	MZ11A-50S221NU	220±30%	500					
5	MZ11A-50S331NU	330±30%	600					
6	MZ11A-50S471NU	470±30%	600					
7	MZ11A-50S681NU	680±30%	600					
8	MZ11A-50S102NU	1000±30%	600					
9	MZ11A-50S152NU	1500±30%	600	100				
10	MZ11A-50S222NU	2200±30%	600					
11	MZ11A-50S332NU	3300±30%	600	70				
12	MZ11A-50S472NU	4700±30%	600	50				
13	MZ11A-75S68RNU	68±30%	360	200	75±7			
14	MZ11A-75S101NU	100±30%	400					
15	MZ11A-75S151NU	150±30%	400					
16	MZ11A-75S221NU	220±30%	500					
17	MZ11A-75S331NU	330±30%	500					
18	MZ11A-75S471NU	470±30%	600					
19	MZ11A-75S681NU	680±30%	600					
20	MZ11A-75S102NU	1000±30%	600					
21	MZ11A-75S152NU	1500±30%	600	100				
22	MZ11A-75S222NU	2200±30%	600					
23	MZ11A-75S332NU	3300±30%	600	70				
24	MZ11A-75S472NU	4700±30%	600	50				

ORDER INFORMATION

KLS6-MZ11A - 75 - HV -XXX N U

- Part Number
- Filament Preheat PTC Thermistor Mz11A Series
- Temperature of switch: 50-50°C 75-75°C 85-85°C 105-105°C 120-120°C
- Type code: S-small type A-Basic type HV-High voltage
- Rated zero power resistance 102=1000Ω 68R=68Ω
- Tol.of resistance: N-± 30% V-± 25% M-± 20% K-± 10% X-else
- Shape of lead: U-in-formed S-straight A-asis wind

PTC Thermistor Series

KLS6-MZ11A Filament Preheat PTC Thermistor Series

No.	Part No.	Rated Zero-power Resistance Rn (Ω)	Break Down Vol. (Vac)	Max. W.C.I max (mA)	Switch Temp. Tsw (℃)	Dimensions (mm)		
						Dmax	Tmax	d
25	MZ11A-105S68RNU	68±30%	360	200	150±7	4	4.5	0.5
26	MZ11A-105S101NU	100±30%	400					
27	MZ11A-105S151NU	150±30%	400					
28	MZ11A-105S221NU	220±30%	400					
29	MZ11A-105S331NU	330±30%	500					
30	MZ11A-105S471NU	470±30%	500					
31	MZ11A-75S681NU	680±30%	600					
32	MZ11A-75S102NU	1000±30%	600					
33	MZ11A-75S152NU	1500±30%	600	100				
34	MZ11A-120S68RNU	68±30%	360	200	120±7			
35	MZ11A-120S101NU	100±30%	400					
36	MZ11A-120S151NU	150±30%	400					
37	MZ11A-120S221NU	220±30%	400					
38	MZ11A-120S331NU	330±30%	500					
39	MZ11A-120S471NU	470±30%	500					
40	MZ11A-120S681NU	680±30%	600					
41	MZ11A-50A68RNU	68±30%	420	400	50±7	6	4.5	0.6
42	MZ11A-50A101NU	100±30%	420					
43	MZ11A-50A151NU	150±30%	500					
44	MZ11A-50A221NU	220±30%	500					
45	MZ11A-50A331NU	330±30%	600					
46	MZ11A-50A471NU	470±30%	600					
47	MZ11A-50A681NU	680±30%	600	300				
48	MZ11A-50S102NU	1000±30%	600					
49	MZ11A-50A152NU	1500±30%	600	150				
50	MZ11A-50A222NU	2200±30%	600	100				
51	MZ11A-75A68RNU	68±30%	420	400	75±7			
52	MZ11A-75A101NU	100±30%	420					
53	MZ11A-75A151NU	150±30%	500					
54	MZ11A-75A221NU	220±30%	500					
55	MZ11A-75A331NU	330±30%	600					
56	MZ11A-75A471NU	470±30%	600					
57	MZ11A-75A681NU	680±30%	600	300				
58	MZ11A-75A102NU	1000±30%	600					
59	MZ11A-75A152NU	1500±30%	600	150				
60	MZ11A-75A102NU	220±30%	600	100				

PTC Thermistor Series

VI

KLS6-MZ11A Filament Preheat PTC Thermistor Series

No.	Part No.	Rated Zero-power Resistance Rn (Ω)	Break Down Vol. (Vac)	Max. W.C.I max (mA)	Switch Temp. Tsw (℃)	Dimensions (mm)		
						Dmax	Tmax	d
61	MZ11A-105A68RNU	68±30%	400	400	105±7	6	4.5	0.6
62	MZ11A-105A101NU	100±30%	400					
63	MZ11A-105A151NU	150±30%	400					
64	MZ11A-105A221NU	220±30%	500					
65	MZ11A-105A331NU	330±30%	600					
66	MZ11A-105A471NU	470±30%	600					
67	MZ11A-105A681NU	680±30%	600	300				
68	MZ11A-105A102NU	1000±30%	600					
69	MZ11A-120A68RNU	68±30%	400	400	120±7			
70	MZ11A-120A101NU	100±30%	400					
71	MZ11A-120A151NU	150±30%	400	400	120±7			
72	MZ11A-120A221NU	220±30%	500					
73	MZ11A-120A331NU	330±30%	600					
74	MZ11A-120A471NU	470±30%	600					
75	MZ11A-50HV68RNU	68±30%	600	400	50±7	6	5	0.6
76	MZ11A-50HV101NU	100±30%	600					
77	MZ11A-50HV151NU	150±30%	750					
78	MZ11A-50HV221NU	220±30%	750					
79	MZ11A-50HV331NU	330±30%	800					
80	MZ11A-50HV471NU	470±30%	900					
81	MZ11A-50HV681NU	680±30%	900	250				
82	MZ11A-50HV102NU	1000±30%	900					
83	MZ11A-50HV152NU	1500±30%	900	150				
84	MZ11A-75HV68RNU	68±30%	600	400	75±7			
85	MZ11A-75HV101NU	100±30%	660					
86	MZ11A-75HV151NU	150±30%	750					
87	MZ11A-75HV221NU	220±30%	750					
88	MZ11A-75HV331NU	330±30%	800					
89	MZ11A-75HV471NU	470±30%	900					
90	MZ11A-75HV681NU	680±30%	900	250				
91	MZ11A-75HV102NU	1000±30%	900					
92	MZ11A-75HV152NU	500±30%	900	150				
93	MZ11A-75HV222NU	2200±30%	900	100				
94	MZ11A-75HV332NU	3300±30%	900	70				

PTC Thermistor Series

KLS6-MZ11A Filament Preheat PTC Thermistor Series

No.	Part No.	Rated Zero-power Resistance Rn (Ω)	Break Down Vol. (Vac)	Max. W.C.I max (mA)	Switch Temp. Tsw (℃)	Dimensions (mm)		
						Dmax	Tmax	d
95	MZ11A-50B68RNU	68±30%	400	800	50±7	8	4.5	0.6
96	MZ11A-50B101NU	100±30%	500					
97	MZ11A-50B151NU	150±30%	500					
98	MZ11A-50B221NU	220±30%	600					
99	MZ11A-50B331NU	330±30%	600	600				
100	MZ11A-50B471NU	470±30%	600	450				
101	MZ11A-50B681NU	680±30%	600	300				
102	MZ11A-50B102NU	1000±30%	600	200				
103	MZ11A-85B68RNU	68±30%	400	800	85±7			
104	MZ11A-85B101NU	100±30%	500					
105	MZ11A-85B151NU	150±30%	500					
106	MZ11A-85B221NU	220±30%	600					
107	MZ11A-85B331NU	330±30%	600	600				
108	MZ11A-85B471NU	470±30%	600	450				
109	MZ11A-85B681NU	680±30%	600	300				
110	MZ11A-85B102NU	1000±30%	600	200				
111	MZ11A-105B68RNU	68±30%	400	800	105±7			
112	MZ11A-105B101NU	100±30%	500					
113	MZ11A-105B151NU	150±30%	500					
114	MZ11A-105B221NU	220±30%	600					
115	MZ11A-105B331NU	330±30%	600	600				
116	MZ11A-105B471NU	470±30%	600	450				
117	MZ11A-105B681NU	680±30%	600	300				
118	MZ11A-105B102NU	1000±30%	600	200				
119	MZ11A-75BHV68RNU	68±30%	600	800	75±7	8	5	0.6
120	MZ11A-75BHV101NU	100±30%	600					
121	MZ11A-75BHV151NU	150±30%	750					
122	MZ11A-75BHV221NU	220±30%	900					
123	MZ11A-75BHV331NU	330±30%	900	600				
124	MZ11A-75BHV471NU	470±30%	900	450				
125	MZ11A-75BHV681NU	680±30%	900	300				
126	MZ11A-75BHV102NU	1000±30%	900	200				
127	MZ11A-75BHV152NU	1500±30%	900	140				
128	MZ11A-75BHV222NU	2200±30%	900	100				

Remark: If the Preheating time is too short, PTC thermistor of low resistance, high couriertemp.of big buld should be selected, vice versa.Besides, Peculiar manufacture capable according to the demands of users.

PTC Thermistor Series

KLS6-MZ11B PTC Thermistor Series

1. Applications

MZ11B PTC thermistor series is mainly applied in the zero-temperature-rise and zero-consumption preheat startup of high-performance ballasts and energy-saving lamps.



2.Principal

MZ11 B series PTC thermister is a kind of compound element which Rt of PTC thermistor is in series of Rv of varistor.when turn on the switch, voltage is higher than Rv's varistor voltage, Rv is in conduction state, it's proceed of preheating startup is basically independent completed by Rt, the startup spot of lamp pipe is in normal operating state, voltage declines below the Rv's varistor voltage, Rv is on break-open state, then make zero power-consumption and zero temperature-up comes true.

Selection of M2 11B series is basically familiar with MZ11A series.there lies one difference Namely, Rv's varistor voltage should be slightly higher than lamp pipe's voltage.

4. Dimension (Unit: mm)

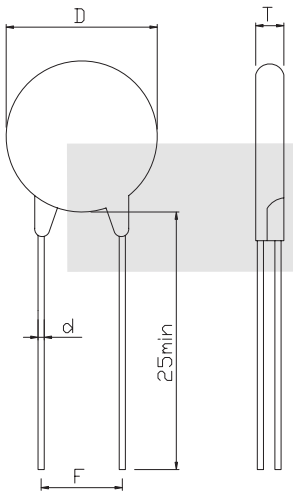

ORDER INFORMATION

KLS6-MZ11B - 75 - HV -XXX N U - 5D - 121K

- Part Number
- PTC Thermistor MZ11B Series
- Temperature of switch: 50-50°C 75-75°C 85-85°C 105-105°C 120-120°C
- Type code: S-small type A-Basic type HV-High voltage
- Rated zero power resistance 102=1000Ω 68R=68Ω
- Tol.of resistance: N-± 30% V-± 25% M-± 20% K-± 10% X-else
- Shape of lead: U-in-formed S-straight A-asis wind
- Chip Diameter: 5D=Φ5mm 7D=Φ7mm 10D=Φ10mm
- Vols of Varistr and Allowable tolerance: 820-82V 101-100V 121-120V 151-S150V K: ± 10% J: ± 5%

PTC Thermistor Series

KLS6-MZ11B PTC Thermistor Series

Main Techno-Parameter

No	Part No.	Rated Zero-power Resistance (Ω)	Switch Temp Tsw (℃)	Varistor Voltage (V)	Max. W.Cur.I max (mA)	Dimensions (mm) Dmax	Tmax	D±0.05	F±1
1	MZ11B-75S221NU-5D121K	220±30%	75±7	120±10%	200	6.5	6.5	0.5	5
2	MZ11B-75S331NU-5D121K	330±30%							
3	MZ11B-75S681NU-5D121K	680±30%							
4	MZ11B-75S102NU-5D121K	1000±30%							
5	MZ11B-75S152NU-5D121K	1500±30%							
6	MZ11B-75S221NU-5D151K	220±30%	75±7	150±10%	200	8.5	6.5	0.5	5
7	MZ11B-75S331NU-5D151K	330±30%							
8	MZ11B-75S681NU-5D151K	680±30%							
9	MZ11B-75S102NU-5D151K	1000±30%							
10	MZ11B-75S152NU-5D151K	1500±30%							
11	MZ11B-85S331NU-5D121K	220±30%	85±7	120±10%	300	6.5	6.5	0.6	5
12	MZ11B-85S471NU-5D121K	330±30%							
13	MZ11B-85S681NU-5D121K	680±30%							
14	MZ11B-85S102NU-5D121K	1000±30%							
15	MZ11B-75S152NU-5D121K	1500±30%							
16	MZ11B-85S331NU-5D151K	330±30%	85±7	150±10%	300	8	6.5	0.5	5
17	MZ11B-85S471NU-5D151K	470±30%							
18	MZ11B-85S681NU-5D151K	680±30%							
19	MZ11B-85S102NU-5D151K	1000±30%							
20	MZ11B-75S152NU-5D151K	1500±30%							
21	MZ11B-105S101NU-5D121K	100±30%	105±7	120±10%	200	6	6.5	0.6	5
22	MZ11B-105S151NU-5D121K	150±30%							
23	MZ11B-105S221NU-5D121K	220±30%							
24	MZ11B-105S331NU-5D121K	330±30%							
25	MZ11B-105S471NU-5D121K	470±30%							
26	MZ11B-105S681NU-5D121K	680±30%							
27	MZ11B-105S102NU-5D121K	1000±30%							
28	MZ11B-105S101NU-5D151K	100±30%	105±7	150±10%	200	8	6.5	0.6	5
29	MZ11B-105S151NU-5D151K	150±30%							
30	MZ11B-105S221NU-5D151K	220±30%							
31	MZ11B-105S331NU-5D151K	330±30%							
32	MZ11B-105S471NU-5D151K	470±30%							
33	MZ11B-105S681NU-5D151K	680±30%							
34	MZ11B-105S102NU-5D151K	1000±30%							
35	MZ11B-105A101NU-7D151K	100±30%	105±7	150±10%	400	8	6.5	0.6	5
36	MZ11B-105A151NU-7D151K	150±30%							
37	MZ11B-105A221NU-7D151K	220±30%							
38	MZ11B-105A331NU-7D151K	330±30%							
39	MZ11B-105A471NU-7D151K	470±30%							
40	MZ11B-105A681NU-7D151K	680±30%							
41	MZ11B-105A102NU-7D151K	1000±30%							
42	MZ11B-105A152NU-7D151K	1500±30%							
43	MZ11B-105A68RNU-10D201K	68±30%	105±7	200±10%	800	11	6.5	0.6	5
44	MZ11B-105A101RNU-10D201K	100±30%							
45	MZ11B-105A151RNU-10D201K	150±30%							
46	MZ11B-105A221RNU-10D201K	220±30%							
47	MZ11B-105A331RNU-10D201K	330±30%							
48	MZ11B-105A471RNU-10D201K	470±30%							
49	MZ11B-85B101NU-7D151K	100±30%	85±7	150±10%	800	8	6.5	0.6	5
50	MZ11B-85B151NU-7D151K	150±30%							
51	MZ11B-85B221NU-7D151K	220±30%							
52	MZ11B-85B331NU-7D151K	330±30%							
53	MZ11B-85B471NU-7D151K	470±30%							
54	MZ11B-85B101NU-10D201K	100±30%	85±7	200±10%	800	11	6.5	0.6	5
55	MZ11B-85B151NU-10D201K	150±30%							
56	MZ11B-85B221NU-10D201K	220±30%							
57	MZ11B-85B331NU-10D201K	330±30%							
58	MZ11B-85B471NU-10D201K	470±30%							

PTC Thermistor Series

KLS6-MZ12A PTC Thermistor Series

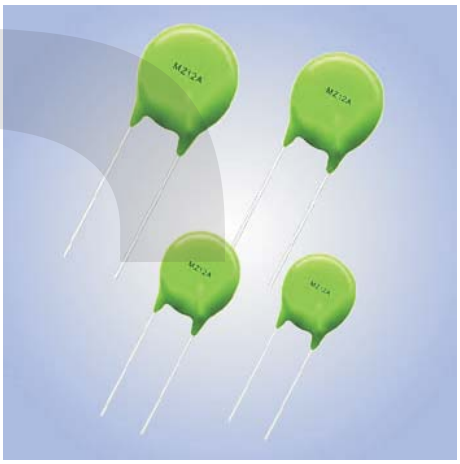

1.Application

MZ12A thermistor is mainly applied in abnormal current and thermal protection of electronic ballast (energy-saving lamp, electronic transformer, multimeter, intellectualized ammeter etc.). It can be in series of the load circuitry right and clamp the excessive current or interdict the current automatically in exceptional conditions, and come back the primary state automatically after the trouble eliminating.It is called ten-thousand time fuse.

2.Characteristics

- No-touch-point circuit and elements protection
- Clamping the excessive current automatically
- Coming back auto.after trouble eliminating
- No noise or sparkle in operating
- Security working, operating easliy

3.Principal

MZ12A thermistor in series of the power supply loop, the current passing through PTC will be less than the ratedcurnt, PTC will be normal, its resistance will be very litle and the normal work of protected circuitries of electronic ballast (energy-saving lamp, transformer , multimeter etc.) will not be influenced when circuitry is in normal state.And PTC will heat suddenly, its resistance will rise up to the high-resistance state suddenly accordingly so as to clamp or interdict the current auto matically to protect the circuitry from damage when the current is far over the rated value.After the current come back the normal state, PTC will also come back low-resistance state automatically and the circuitry will work normally again.

In the field of Surge current protection of electronic ballast (energy-saving lamp, transformer, multimeter etc.).

4. Dimension (Unit: mm)

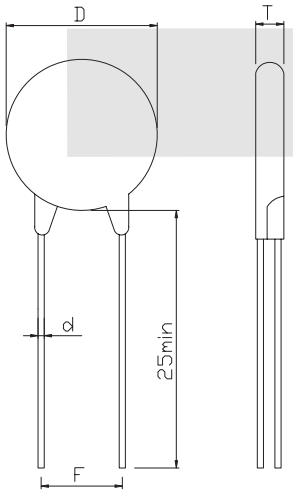

ORDER INFORMATION

KLS6-MZ12A - 75 - LL -XXX M XXX

- Part Number / MZ12A over I / t protection of PTC thermistor series
- Sorts of switch temp : 75-75°C 105-105°C 120-120°C
- Chip Diameter : S=Φ3mm A=Φ5mm B=Φ7mm LB=Φ8mm M=Φ10mm SL=Φ13mm LL=Φ19mm
- Rated R: 82R=82Ω 4R7=4.7Ω 151=150Ω
- R.precision: N-± 30% M-± 20% K-± 10% J-± 5%
- Max.non-operating current : 060-60mA 300-300mA

PTC Thermistor Series

KLS6-MZ12A PTC Thermistor Series

Main Techno-Parameter

MZ12A (I) for over current / over heat protection

No.	Max. Non-operating Cur. In (mA)	Trip Cur. It (mA)	Rated Zero-power Resistance R25 (Ω)	Max. w. Cur. Imax (A)	Dimensions (mm)			
					Dmax	Tmax	D±0.05	F±1
MZ12A-75S222M005	5	10	2200±20%	0.2	4	4.5	0.5	5
MZ12A-75S152M006	6	12	1500±20%					
MZ12A-75S102M008	8	16	1000±20%					
MZ12A-75S681M010	10	20	680±20%					
MZ12A-75S471M012	12	24	470±20%	0.3				
MZ12A-75S331M015	15	30	330±20%					
MZ12A-75S221M018	18	36	220±20%					
MZ12A-75S151M020	20	40	150±20%	0.4				
MZ12A-75S101M025	25	50	100±20%					
MZ12A-75A471M014	14	28	470±20%	0.4	6.5	4.5	0.6	5
MZ12A-75A331M017	17	34	330±20%					
MZ12A-75A221M020	20	40	220±20%	0.5				
MZ12A-75A151M024	24	48	150±20%					
MZ12A-75A101M028	28	56	100±20%	0.6				
MZ12A-75A68RM032	32	64	680±20%					
MZ12A-75B331M020	20	40	330±20%	0.8	8	4.5	0.6	5
MZ12A-75B221M025	25	50	220±20%					
MZ12A-75B151M030	30	60	150±20%					
MZ12A-75B101M035	35	70	100±20%	1				
MZ12A-75B68RM040	40	80	68±20%					
MZ12A-75LB82RM035	35	70	82±20%	1	9	4.5	0.6	5
MZ12A-75LB68RM040	40	80	68±20%	1.2				
MZ12A-75LB47RM045	45	90	47±20%					
MZ12A-75LB33RM050	50	100	33±20%					
MZ12A-75LB22RM060	60	120	22±20%	1.5				
MZ12A-75LB15RM070	70	140	15±20%					
MZ12A-75LB10RM080	80	160	10±20%					
MZ12A-85B151M35	35	70	150±20%	0.8	8	4.5	0.6	5
MZ12A-85B121M040	40	80	120±20%					
MZ12A-85B101M045	45	90	100±20%	0.9				
MZ12A-85B82M050	50	100	82±20%					
MZ12A-85B68M055	55	110	68±20%	1				
MZ12A-85LB68RM060	60	120	68±20%	1.2	9	4.5	0.6	5
MZ12A-85LB47RM065	65	130	47±20%					
MZ12A-85LB39RM070	70	140	39±20%					
MZ12A-85LB33RM075	75	150	33±20%					
MZ12A-85LB25RM080	80	160	25±20%	1.5				
MZ12A-85LB22RM085	85	170	22±20%					
MZ12A-85LB18RM090	90	180	18±20%					
MZ12A-85LB15RM098	98	196	15±20%					
MZ12A-85LB12RM105	105	210	12±20%					
MZ12A-85LB10RM115	115	230	10±20%					

PTC Thermistor Series

KLS6-MZ12A PTC Thermistor Series

No.	Max.Non-operating Cur.In (mA)	Trip Cur.It (mA)	Rated Zero-power Resistance R25 (Ω)	Max.w. Cur.Imax (A)	Dimensions (mm)			
					Dmax	Tmax	D±0.05	F±1
MZ12A-105S221MO20	20	40	220±20%	0.2	4	4.5	0.5	5
MZ12A-105S151MO25	25	50	150±20%					
MZ12A-105S101MO30	30	60	100±20%					
MZ12A-105B151MO45	45	90	150±20%	0.8	8	4.5	0.6	5
MZ12A-105B121MO50	50	100	120±20%					
MZ12A-105B101MO55	55	110	100±20%					
MZ12A-105B82RMO60	60	120	82±20%	0.9				
MZ12A-105B68RMO65	65	130	68±20%					
MZ12A-105B56RMO70	70	140	56±20%					
MZ12A-105LB33RM100	100	200	33±20%	1.2	9	4.5	0.6	5
MZ12A-105LB22RM170	110	220	22±20%					
MZ12A-105LB15RM120	120	240	15±20%					
MZ12A-105LB22RM120	120	240	22±20%	1.5	11.5	4.5	0.6	5
MZ12A-105M15RM130	130	260	15±20%					
MZ12A-105M10RM140	140	280	10±20%	1.8				
MZ12A-105M8R2M150	150	300	8.2±20%					
MA12Z-105SL18RM150	150	300	18±20%	1.8	14.5	5	0.8	7.5
MZ12A-105SL15RM-160	160	320	15±20%					
MZ12A-105SL12RM170	170	340	12±20%	2				
MZ12A-105SL10RM180	180	360	10±20%	2.2				
MZ12A-105SL8R2M190	190	380	8.2±20%					
MZ12A-105SL6R8M200	200	400	6.8±20%	2.5				
MZ12A-120M47RNO90	90	180	47±20%	1.2	11.5	5	0.6	5
MZ12A-120M39RM100	100	200	39±20%					
MZ12A-120M33RM110	110	220	33±20%	1.5				
MZ12A-120M22RM130	130	260	22±20%					
MZ12A-120M15RM150	150	300	15±20%					
MZ12A-120M10RM170	170	340	10±20%	1.8				
MZ12A-120SL15RM200	200	400	15±20%	1.8	14.5	5	0.6	5
MZ12A-120SL12RM220	220	4440	12±20%					
MZ12A-120SL10RM240	240	480	10±20%	2				
MZ12A-120SL8R2M270	270	540	8.2±20%					
MZ12A-120SL6R8M300	300	600	6.8±20%	2.4				
MZ12A-120LL12RM300	300	600	12±20%	3.5	21	5	0.8	7.5
MZ12A-120LL10RM330	330	660	10±20%					
MZ12A-120LL8R2M360	360	720	8.2±20%	4				
MZ12A-120LL6R8M400	400	800	6.8±20%					
MZ12A-120LL4R7M450	450	900	4.7±20%	4.5				
MZ12A-120LL3R3M500	500	1000	3.3±20%					
MZ12A-120LL2R2M550	550	1100	2.2±20%	5				
MZ12A-120LL1R5M600	600	1200	1.5±20%					

PTC Thermistor Series

KLS6-MZ12A PTC Thermistor Series

Main Techno-Parameter

MZ12A （Ⅱ） for Over-current Protection of Telcom

No.	Part No.	Rated Zero-power Resistance （Ω）	Max. Non-Operating Current （40℃±2℃） （mA）	Max. Operating Times （S） 3A ↓ 0.5A	1A ↓ 0.5	0.5A ↓ 0.15A	0.2A ↓ 0.1A	Dimensions （mm） D	T	F	d
1	MZ12A-12RM090	12±20%	90	0.3	1.2	20	50	9	4.5	5	0.6
2	MZ12A-15RM070	15±20%	70	0.2	1	12	20	9	4.5	5	0.6
3	MZ12A-18RM110	18±20%	110	0.2	1.4	15	30	8	2.5	5	0.6
4	MZ12A-20RM070	20±20%	70	0.2	1	12	20	9	4.5	5	0.6
5	MZ12A-35RM060	35±20%	60	0.2	0.8	4	15	9	4.5	5	0.6
6	MZ12A-50RM060	50±20%	50	0.1	0.8	3	15	11	4.5	5	0.6
7	MZ12A-55RM060	55±20%	60	0.1	0.5	2	15	11	4.5	5	0.6
8	MZ12A-101M050	100±20%	50	0.1	0.5	2	8	9	4.5	5	0.6

Other specifications:
Over-current withstanding: 3Arms 220Vrms 20times
Lightning surges: 10/310μs 1.5KV37.5A 10times
10/1000μs 1.0KV25A 30times
Over-voltage withstanding: 250Vrms 3Arms 15min
Restore time: ≤ 60S
Induced voltage withstanding: 650Vrms 1.1Arms 20times

PTC Thermistor Series

KLS6-MZ12A PTC Thermistor Series

Main Techno-Parameter

MZ12A （Ⅲ） is mainly used for overcurrent / overheat protection

No	Part No.	Max. Non-Operating Current (mA)	Trip current (mA)	Rated Zero-power Resistance (Ω)	Max. W. C. I max (mA)	Dimensions (mm)			
						Dmax	Tmax	d±0.05	F±1
Max. W. V. 60V_{AC}									
1	MZ12A-3R5N010	100	200	3.5±30%	40	7.4	4.5	0.5	5
2	MZ12A-2R4M020	200	400	2.4±20%		7.4	4.5	0.5	5
3	MZ12A-1R1M030	300	600	1.1±20%		7.4	4.5	0.5	5
4	MZ12A-R63M050	500	1000	0.63±20%		7.9	4.5	0.5	5
5	MZ12A-R33M075	750	1500	0.33±20%		9.4	4.5	0.5	5
6	MZ12A-R20M110	1100	2200	0.20±20%		12.8	4.5	0.8	5
7	MZ12A-R15M135	1350	1700	0.15±20%		15.7	4.5	0.8	5
8	MZ12A-R10M185	1850	3700	0.10±20%		17.5	4.5	0.8	5
9	MZ12A-R06M250	2500	5000	0.06±20%		20.8	4.5	0.8	10
10	MZ12A-R04M375	3750	7500	0.04		27.2	4.5	0.8	10
:Max. W. V. :Wmax=30V_{AC}									
11	MZ12A-R18M090	900	1800	0.18±20%	40	7.4	4.5	0.5	5
12	MZ12A-R10A135	1350	1500	0.10±20%		8.9	4.5	0.5	5
13	MZ12A-R08A185	1850	2700	0.08±20%		10.2	4.5	0.5	5
14	MZ12A-R06M250	2500	5000	0.06±20%		11.4	4.5	0.5	5
15	MZ12A-R05M400	4000	8000	0.05±20%		14	4.5	0.8	5
16	MZ12A-R03N600	6000	12000	0.03±20%		16.5	4.5	0.8	10
17	MZ12A-R02N800	8000	16000	0.02±20%		21.6	4.5	0.8	10

NTC Thermistor Series

KLS6-MF11、 Mf12 Compensation NTC Thermistors Series

1. Application

Common-precision temperature measurement, temperature compensation in measuring equipments and transistor circuit.



2.Characteristics

MF11: Little error range of B value and for the products of which the resistance error is in the range of 5%, there is good quality of coherence and interchange.

MF12: Broad range of resistance, the maximum rated resistance can reach 5MΩ, good stability.

3.Main Techno-Parameter

Rated resistance, B value and their allowable tolerance showed in the following table

Time constant ⩽ 30S

Measuring power ⩽ 0. 1mW

The range of application -55ºC ~ +125ºC

Dissi.Factor ⩾ 6mW/ºC

Rated Power: 0.5W

Remark:Our corporation can offer the thermistor of corresponding parameter according to the especial requirement of customer's.

Power-Consumption curve

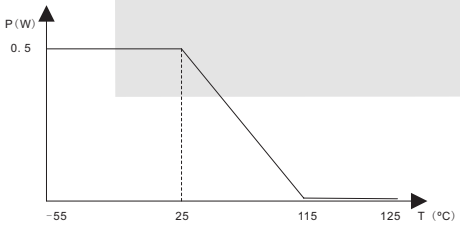

Dimension (Unit: mm)

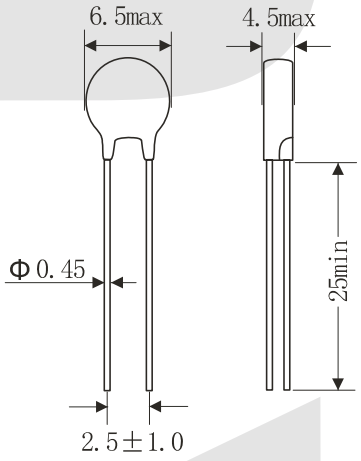

ORDER INFORMATION

KLS6-MF11-XX / X

Part Number

Temperature compensation NTC thermistor MF11/ 12 Series

Rated Resistance

Tolerance: J-± 5% K-± 10% L-± 15% M-± 20%

NTC Thermistor Series

VI

KLS6-MF11、 MF12 Compensation NTC Thermistors Series

Part No	B Value (25/50℃)		Rated zero-power resistance at 25℃	
	Rated Value (K)	Allowable Tolerance (%)	Resistance range (Ω)	Allowable Tolerance (%)
MF11	2700	±5	3.3～33	±5
	2830		6.8～68	
	2950		15～150	
	3100		33～330	
	3250		68～680	
	3400		150～1500	
	3570		330～3300	
	3740		680～6800	±10
	3900		1500～15000	±20
	4050		3300～33000	
MF12	4250		6800～68000	
	4450		15000～150000	
	4670		33000～330000	
	4800		68000～680000	
	5050		150000～5000000	

NTC Thermistor Series

KLS6-MF72 Power NTC Thermistors Series

1.Introduction

An NTC thermistor has to be connected in series to the power source circuit to avoid the surge current at the instant when the electronic circuits are turned on. The device can effectively suppress the surge current, and its resistance and power consumption can be greatly reduced after that through the continuous effect of the current so as not to affect the normal work current. Therefore the Power NTC thermistor is the most convenient and efficient instrument to curb the surge current and protect the electronic devices from being damaged.

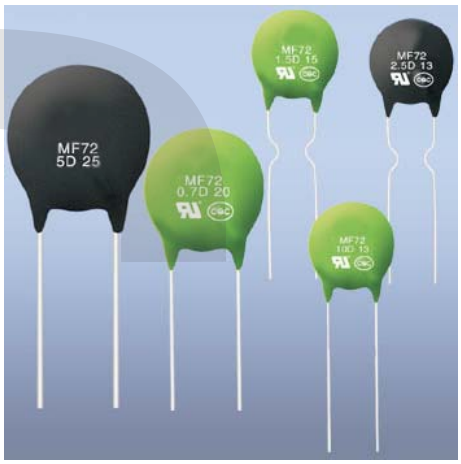

2. Applications

Applicable to the protection of the power circuits of conversion power supply, switching power supply, UPS power supply, electric heaters, electronic energy-saving amps, electronic ballasts and other electronic devices, and the filament protection of color picture tubes, incandescent amps and other lights.

3.Characteristics:

Small size,Strong power and strong capability of surge current protection.
Characteristics Fast response to the rapidly surge.
Big material constant(B value),Small remain resistance.
Longevity of service,High reliability.
Integral series,Extensive operating range.

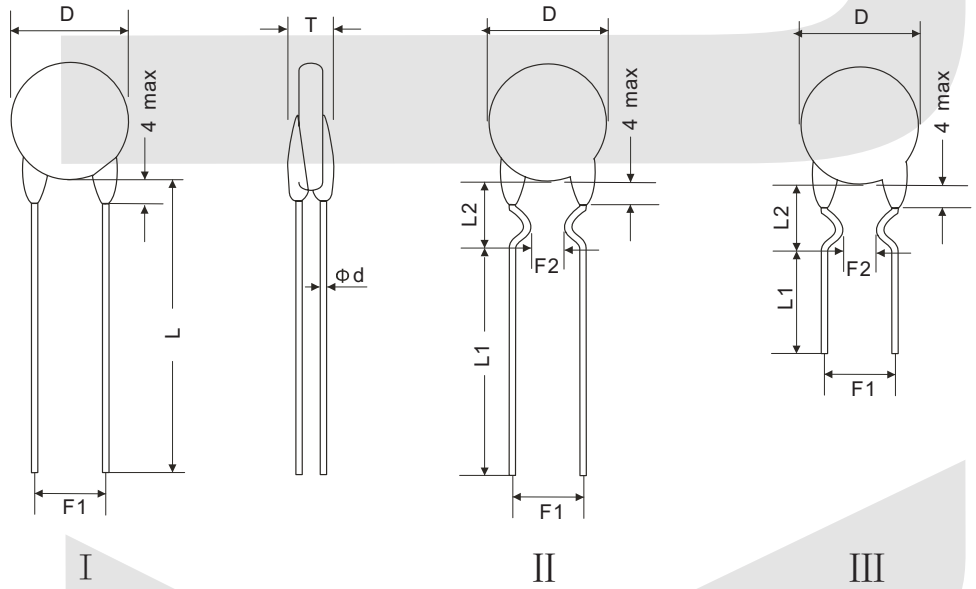

ORDER INFORMATION

KLS6-MF72-XX-D XX

Part Number
Inrush limite NTC thermistor
Mf72 series
Chip Diameter
Rated Zero Power Resistance

NTC Thermistor Series

KLS6-MF72 Power NTC Thermistors Series

Sym / Dim (mm) / Part No.	D +2/−1	T max	d 0.05	F_1 1	F_2 1.5	Straight Lead Wire L min	Curved Lead Wire b L_1 min	Curved Lead Wire L_2 2
MF72-□D5	6.5	5	0.6/0.45	5/2.5	3	25	17/5	8
MF72-□D7	8.5	5	0.6	5	3	25	17/5	8
MF72-□D9	10.5	5.5	0.8/0.6	7.5/5	5/3	25	17/5	8
MF72-□D11	12.5	5.5	0.8/0.6	7.5/5	5/3	25	17/5	8
MF72-□D13	14.5	6	0.8	7.5	5	25	17/5	8
MF72-□D15	16.5	6	0.8	10/7.5	5	25	17/5	8
MF72-□D20	21.5	7	1.0	10/7.5	/	25	/	/
MF72-□D25	26.5	8	1.0	10	/	25	/	/
Remark	a、□rated zero-power resistance b、17/5 17 show the long bend tead wire 5 shows the short bend lead wire.							

Illustration:In general,the long bend lead wire is used,name shape is II.

Main Techno-Parameter

Part NO.	R_{25} (Ω)	Max. Steady State Current (A)	Approx. R of Max. Cur (Ω)	Dissi, Coef. (mW/℃)	Thermal time Constant (S)	Operating Temp. (℃)
MF72-5D5	5	1	0.353	6	20	−55～+200
MF72-10D5	10	0.7	0.771	6	20	
MF72-60D5	60	0.5	1.878	6	18	
MF72-200D5	200	0.1	6.259	6	18	
MF72-5D7	5	2	0.283	10	30	
MF72-8D7	8	1	0.539	9	28	
MF72-10D7	10	1	0.616	9	27	
MF72-12D7	12	1	0.816	9	27	
MF72-16D7	16	0.7	1.003	9	27	
MF72-22D7	22	0.6	1.108	9	27	
MF72-33D7	33	0.5	1.485	10	28	
MF72-200D7	200	0.2	6.233	11	28	
MF72-3D9	3	4	0.12	11	35	
MF72-4D9	4	3	0.19	11	35	
MF72-5D9	5	3	0.21	11	34	
MF72-6D9	6	2	0.315	11	34	
MF72-8D9	8	2	0.4	11	32	
MF72-10D9	10	2	0.458	11	32	
MF72-12D9	12	1	0.652	11	32	
MF72-16D9	16	1	0.802	11	31	
MF72-20D9	20	1	0.864	11	30	
MF72-22D9	22	1	0.95	11	30	
MF72-30D9	30	1	1.022	11	30	
MF72-33D9	33	1	1.124	11	30	
MF72-50D9	50	1	1.252	11	30	
MF72-60D9	60	0.8	1.502	11	30	
MF72-80D9	80	0.8	2.01	11	30	
MF72-120D9	120	0.8	3.015	11	30	
MF72-200D9	200	0.5	5.007	11	32	
MF72-400D9	400	0.2	9.852	11	32	

NTC Thermistor Series

KLS6-MF72 Power NTC Thermistors Series

Part NO.	R_{25}	Max. Steady State Current	Approx. R of Max. Cur	Dissi. Coef.	Thermal time Constant	Operating Temp.
	(Ω)	(A)	(Ω)	(mW/℃)	(S)	(℃)
MF72-2.5D11	2.5	5	0.095	13	43	-55～+200
MF72-3D11	3	5	0.1	13	43	
MF72-4D11	4	4	0.15	13	44	
MF72-5D11	5	4	0.156	13	45	
MF72-6D11	6	3	0.24	13	45	
MF72-8D11	8	3	0.255	14	47	
MF72-10D11	10	3	0.275	14	47	
MF72-12D11	12	2	0.462	14	48	
MF72-16D11	16	2	0.47	14	50	
MF72-20D11	20	2	0.512	15	52	
MF72-22D11	22	2	0.563	15	52	
MF72-30D11	30	1.5	0.667	15	52	
MF72-33D11	33	1.5	0.734	15	52	
MF72-50D11	50	1.5	1.021	15	52	
MF72-60D11	60	1.5	1.215	15	52	
MF72-80D11	80	1.2	1.656	15	52	
MF72-1.3D13	1.3	7	0.062	13	60	
MF72-1.5D13	1.5	7	0.073	13	60	
MF72-2.5D13	2.5	6	0.088	13	60	
MF72-3D13	3	6	0.092	14	60	
MF72-4D13	4	5	0.12	15	67	
MF72-5D13	5	5	0.125	15	68	
MF72-6D13	6	4	0.17	15	65	
MF72-7D13	7	4	0.188	15	65	
MF72-8D13	8	4	0.194	15	60	
MF72-10D13	10	4	0.206	15	65	
MF72-12D13	12	3	0.316	16	65	
MF72-15D13	15	3	0.335	16	60	
MF72-16D13	16	3	0.338	16	60	
MF72-20D13	20	3	0.372	16	65	
MF72-30D13	30	2.5	0.517	16	65	
MF72-47D13	47	2	0.81	17	65	
MF72-120D13	120	1.5	2.124	16	65	
MF72-1.3D15	1.3	8	0.048	18	68	
MF72-1.5D15	1.5	8	0.052	19	69	
MF72-3D15	3	7	0.075	18	76	
MF72-5D15	5	6	0.112	20	76	
MF72-6D15	6	5	0.155	20	80	
MF72-7D15	7	5	0.173	20	80	
MF72-8D15	9	5	0.178	20	80	
MF72-10D15	10	5	0.18	20	75	
MF72-12D15	12	4	0.25	20	75	
MF72-15D15	15	4	0.268	21	85	
MF72-16D15	16	4	0.276	21	70	

NTC Thermistor Series

KLS6-MF72 Power NTC Thermistors Series

Part NO.	R_{25}	Max. Steady State Current	Approx. R of Max. Cur	Dissi. Coef.	Thermal time Constant	Operating Temp.
	(Ω)	(A)	(Ω)	(mW/℃)	(S)	(℃)
MF72-20D15	20	4	0.288	17	86	-55～+200
MF72-30D15	30	3.5	0.438	18	75	
MF72-47D15	47	3	0.68	21	86	
MF72-120D15	120	2.5	1.652	22	87	
MF72-0.7D20	0.7	12	0.018	25	89	
MF72-1.3D20	1.3	9	0.037	24	88	
MF72-3D20	3	8	0.055	24	88	
MF72-5D20	5	7	0.087	23	87	
MF72-6D20	6	6	0.113	25	103	
MF72-8D20	8	6	0.142	25	105	
MF72-10D20	10	6	0.162	24	102	
MF72-12D20	12	5	0.195	24	100	
MF72-16D20	16	5	0.212	25	100	
MF72-0.7D25	0.7	13	0.014	30	120	
MF72-1.5D25	1.5	10	0.027	30	121	
MF72-3D25	3	9	0.044	32	124	
MF72-5D25	5	8	0.07	32	125	
MF72-8D25	8	7	0.114	33	125	
MF72-10D25	10	7	0.13	32	127	
MF72-12D25	12	6	0.156	32	126	
MF72-16D25	16	6	0.16	35	126	

NTC Thermistor Series

KLS6-MF73 Super-Large Power NTC Thermistors Series

1. Applications

Applicable to the surge current suppression of the conversion power supply, switching power supply, UPS power supply, large power lights and electric heaters.

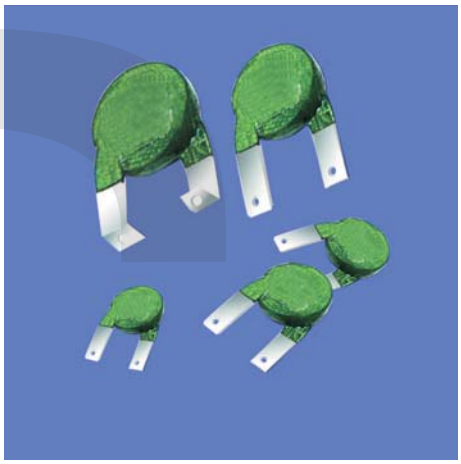

2. Features

This type NTC thermistor is processed with high purity materials and special techniques, and it can work continously under high steady current. It is one of the power NTC thermistors that have the best surge current suppression capability and the highest workable steady current.

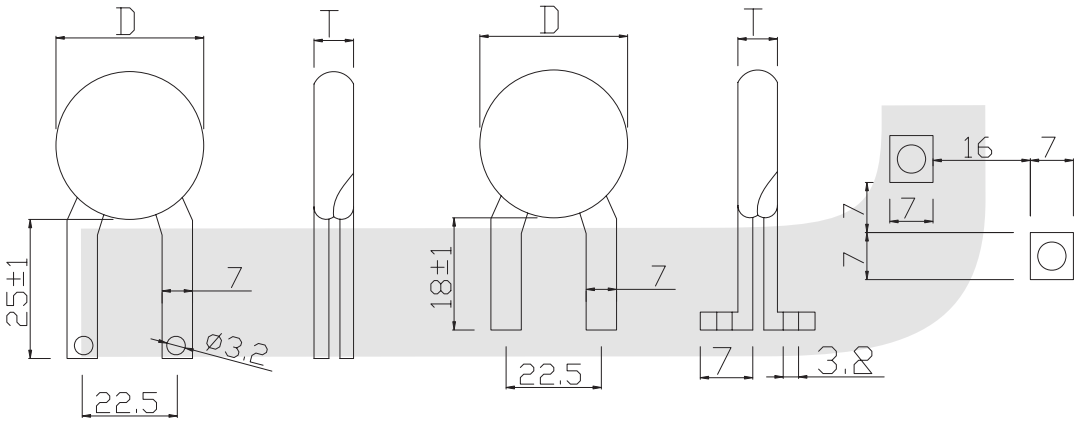

Chip Diameter 1 (mm)	30	35	45	60
Format Diameter (D) max	35	40	50	65
Thickness (T) max	10	12	12	12

ORDER INFORMATION

KLS6-MF73-XX / XX

- KLS6-MF73: Part Number — Super-Large Power NTC Thermistors MF73 Series
- XX: Rated Resistance
- XX: Steady-state current

NTC Thermistor Series

KLS6-MF73 Super-Large Power NTC Thermistors Series

Main Techno-Parameter

Part No	Chip Diameter	R25	Max. Steady State Current	Approx. R of Max. Cur. at 25℃	Dissi. Coef.	Thermal time Constant	Operating Temp
	mm	(Ω)	(A)	(Ω)	(mW/℃)	(S)	(℃)
MF73-0.7/14	30	0.7	14	0.061	45	140	-55～+200
MF73-1/11		1	11	0.089	45	140	
MF73-1.5/11		1.5	11	0.099	43	139	
MF73-2/10		2	10	0.117	43	139	
MF73-3/10		3	10	0.12	43	139	
MF73-5/9		5	9	0.148	41	137	
MF73-8/8		8	8	0.179	45	140	
MF73-10/8		10	8	0.188	43	139	
MF73-16/7		16	7	0.232	45	140	
MF73-20/7		20	7	0.245	45	140	
MF73-30/6		30	6	0.333	54	140	
MF73-0.7/15	35	0.7	15	0.064	50	152	
MF73-1/12		1	12	0.093	50	152	
MF73-1.2/12		1.5	12	0.101	47	151	
MF73-2/11		2	11	0.115	47	151	
MF73-3/11		3	11	0.12	47	151	
MF73-5/10		5	10	0.145	45	149	
MF73-8/9		8	9	0.0173	50	152	
MF73-10/9		10	9	0.179	47	151	
MF73-16/8		16	8	0.217	50	152	
MF73-20/8		20	8	0.226	50	152	
MF73-30/7		30	7	0.296	50	152	

NTC Thermistor Series

KLS6-MF73 Super-Large Power NTC Thermistors Series

Part No	Chip Diameter	R25	Max. Steady State Current	Approx. R of Max. Cur. at 25℃	Dissi. Coef.	Thermal time Constant	Operating Temp
	mm	(Ω)	(A)	(Ω)	(mW/℃)	(S)	(℃)
MF73-0.7/17	45	0.7	17	0.059	66	201	-55～+200
MF73-1/14		1	14	0.078	66	201	
MF73-1.5/14		1.5	14	0.087	62	200	
MF73-2/13		2	13	0.096	62	200	
MF73-3/13		3	13	0.101	62	200	
MF73-5/12		5	12	0.118	60	197	
MF73-8/11		8	11	0.134	66	201	
MF73-10/11		10	11	0.14	62	200	
MF73-16/10		16	10	0.163	60	201	
MF73-20/10		20	10	0.17	60	201	
MF73-30/9		30	9	0.21	60	201	
MF73-0.5/25	60	0.5	25	0.032	94	285	
MF73-0.7/20		0.7	20	0.05	94	285	
MF73-1/17		1	17	0.06	94	285	
MF73-1.5/17		1.5	17	0.069	88	284	
MF73-2/16		2	16	0.075	88	284	
MF73-3/16		3	16	0.078	88	284	
MF73-5/15		5	15	0.089	85	280	
MF73-8/14		8	14	0.098	94	285	
MF73-10/14		10	14	0.102	88	284	
MF73-16/13		16	13	0.113	85	280	
MF73-20/13		20	13	0.118	85	280	
MF73-30/12		30	12	0.138	85	280	

NTC Thermistor Series

KLS6-MF74 Super-Large Power NTC Thermistors Series

1. Applications

Applicable to the surge current suppression of the conversion power supply, switching power supply, UPS power supply, large power lights and electric heaters.

2. Features

The large power NTC thermistor is processed with high purity materials and special techniques. It adopts the overheat resistant installation, and can work continuously under 12A ~ 40A steady current. It is one of the power NTC thermistors that have the best surge current suppression capability and the highest workable steady current.



Main Techno-Parameter

Part No	R_{25}	Max. Steady State Current	Approx R of Max. Current At 25℃	Dissi. Coef.	Thermal time Constant	Operating Temp
	(Ω)	(A)	(Ω)	(mW/℃)	(S)	(℃)
MF74-05/40	0.5	40	0.00875	118	340	
MF74-0.7/36	0.7	36	0.011	118	340	
MF74-1/32	1	32	0.0137	118	340	
MF74-1.3/27	1.3	27	0.0192	118	340	
MF74-1.5/27	1.5	27	0.0206	118	340	
MF74-2/25	2	25	0.024	120	340	
MF74-2.5/25	2.5	25	0.0252	120	350	
MF74-3/23	3	23	0.0293	123	350	
MF74-4/21	4	21	0.034	123	350	
MF74-5/21	5	21	0.0364	123	350	-55～+200
MF74-6/18	6	18	0.0494	123	355	
MF74-8/18	8	18	0.0525	125	360	
MF74-10/18	10	18	0.0555	125	360	
MF74-12/15	12	15	0.0622	125	345	
MF74-16/15	16	15	0.0688	125	345	
MF74-20/15	20	15	0.0745	125	345	
MF74-25/15	25	15	0.0857	125	345	
MF74-30/12	30	12	0.117	125	350	

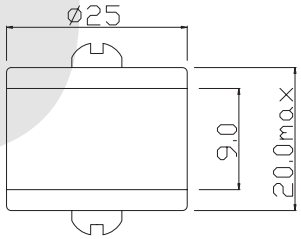

ORDER INFORMATION

KLS6-MF74-XX / XX

- Part Number
- Super-Large Power NTC Thermistors MF74 Series
- Steady-state current
- Rated Resistance

NTC Thermistor Series

KLS6-MF52 Pearl-Shape Precision NTC Thermistor Series

1. Introduction

MF52 Pearl-Shape Precision NTC Thermistor is ethoxyline resin-enveloped thermistor in Small size which is made from new material and by new technique, has the virtue of high precision and fast response and so on.



2. Application

Air-condition Equipments · Heating Apparatus · Electric Thermometer · Liquid Level Sense · Automobile Electricity Electric Table-board · Battery of Mobile Telephone

3. Characteristics

High Testing Precision · Small size, Fast Response · Steady Operating For Long Time · Good Quality of Coherence And Interchange

4. Dimension (Unit: mm)

A: Tin.Ag.nickle plated cu wire

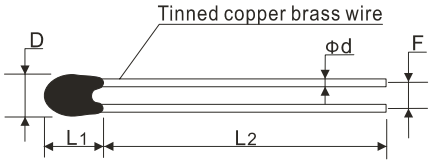

Code	D max	L1 max	L2 min	d ±0.05	F ±0.05
A1	2	3	25	0.3	2
A2	3	4	25	0.45	2

B: Enamelled cu wire

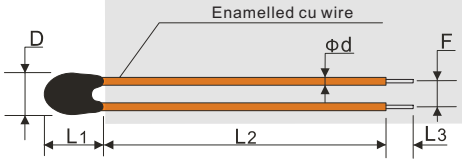

Code	D max	L_1 max	L_2 min	L_3±1	d ±0.05	F ±0.05
B1	2	3	by user determine	5	0.2	2
B2	3	4	by user determine	5	0.3	2

C: High temp fluorin-plastic wire

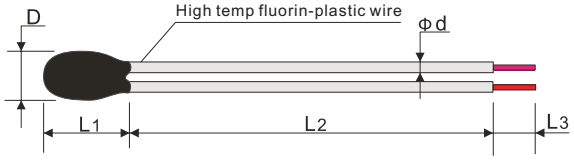

Code	D max	L_1 max	L_2 min	L_3±1	d ±0.05
C1	2	3	by user determine	5	0.4
C2	3	4	by user determine	5	0.5

D:PVC wire

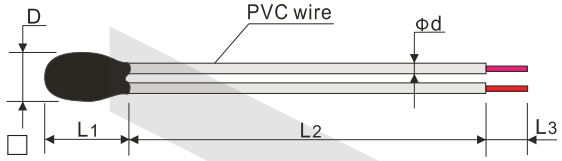

Code	D max	L_1 max	L_2 min	L_3±1	d ±0.05
D1	2	3	by user determine	5	0.26
D2	3	4	by user determine	5	0.32

ORDER INFORMATION

KLS6-MF52 - B -XXX F XXXX

- KLS6-MF52: Part Number — MF52 Pearl-Shape Precision NTC Thermistor Series
- B: Lead wire material: B-Enamelled cu wire
- XXX: Rated Resistance
- F: Tolerance: F-±1% G-±2% H-±3% J-±5%
- XXXX: B value: namely 3380k

NTC Thermistor Series

KLS6-MF52 Pearl-Shape Precision NTC Thermistor Series

E: Lead and head are all special specification

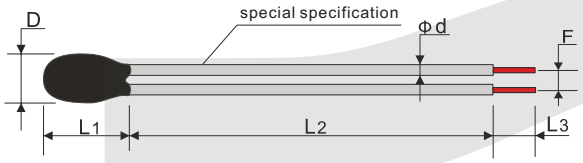

Code	D max	L_1 max	L_2 min	$L_3 \pm 1$	d ±0.05	F ±0.05
E1	by user determine	by user determine	by user determine	5	by user determine	2.5
E2	by user determine	by user determine	by user determine	5	by user determine	2.5

F: Tinned steel wire

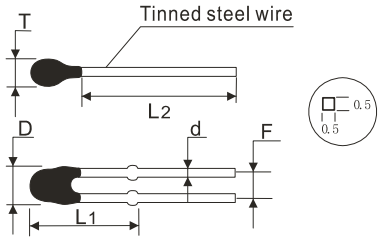

Code	D max	L_1 max	$L_2 \pm 1.5$	d max	F±0.5	Tmax
F	3.8	9.5	17	5	2.5	3.5

Main Techno-Parameter

Part No.	Rated Resistance R_{25}	B Value (25/50℃)	Rated Power (mw)	Disst. Coef. (mW/℃)	Themal time Constant (S)	Operating Temp. (℃)
MF52□□□3100	0.1～20	3100				
MF52□□□3270	0.2～20	3270				
MF52□□□3380	0.5～50	3380				
MF52□□□3470	0.5～50	3470				
MF52□□□3600	1～100	3600		≥2.0	≤7	
MF52□□□3950	5～100	3950				
MF52□□□4000	5～100	4000		In Still Air	In Still Air	
MF52□□□4050	5～200	4050				
MF52□□□4150	10～250	4150				
MF52□□□4300	20～1000	4300				
MF52□□□4500	20～1000	4500				

Remark:
1. The first pane fills with code of different diamension, The second pane fills with Rated Resistance, the third fills with its precision symbol.
2. B value (25/50°C) error: the corresponding error is ± 1% for which the precision of the rated resistance is ± 1%, others is ± 2%.
3. Besides, our corporation can supply products according to the demands of users.

Notice:
* The two ends of the lead wire cannot endure too big pull because of the Small size and soldered spot in series of MF52.
* While, please soldering at the distance of 5mm from the bottom of wire at least.

ORDER INFORMATION

KLS6-MF52 - B -XXX F XXXX

- KLS6-MF52: Part Number — MF52 Pearl-Shape Precision NTC Thermistor Series
- B: Lead wire material: B-Enamelled cu wire
- XXX: Rated Resistance
- F: Tolerance: F-± 1% G-± 2% H-± 3% J-± 5%
- XXXX: B value: namely 3380k

NTC Thermistor Series

KLS6-MF58 Glass Shell Precision NTC Thermistors Series

1. Introduction

The product is processed with the combination of ceramic and semiconductor techniques. It is introduced axially from both sides and wrapped with purified glass.



2. Applications

Temperature compensation and detection of household appliances (eg air conditioners, microwave ovens, electric fans, electric heaters etc.)

Temperature compensation and detection of office automation facilities (eg copiers, printers etc.)

Temperature compensation and detection of the industrial, medical, environmental protection, weather and food processing equipment

Liquid level display and flowrate measurement

Mobile phone battery

Temperature compensation of apparatus coils, integrated circuits, quartz crystal oscillators and thremocouples.

3. Features

Fine stability, high reliablity

Wide range of resistance: 0.1 ~ 1000KΩ

High resistance precision

Usable in high-temperature and high-moisture environments due to the glass wrapping

Small, light, firm structure, convenient automatic installation on PCB

Prompt heat sensing speed, high sensitivit

Dimension (Unit: mm)

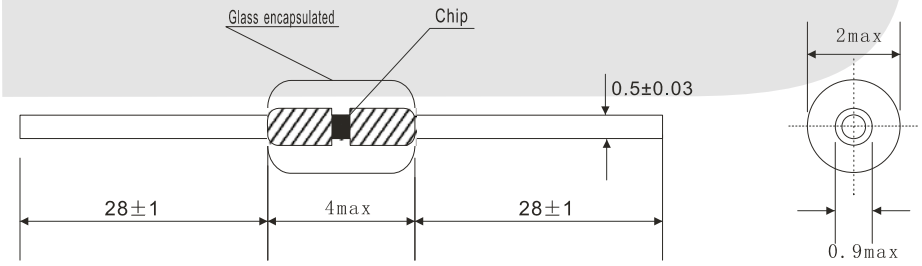

Main Techno-Parameter

1.The range of resistance under the rated zero power (R_{25}): 0.1 ~ 1000KΩ
2.The allowable tolerance of R_{25} : ± 1%, ± 2%, ± 3%, ± 5%, ± 10%
3.The range of B value ($R_{25/50°C}$) :3100 ~ 4500K
4.The allowable tolerance of B value: ± 0.5%, ± 1%, ± 2%
5.Dissipation factor: ⩾ 2mW /ºC (In Still Air)
6.Thermal time constant: ⩽ 20S (In Still Air)
7.The range of operating temperature: -55ºC ~ +200ºC
8.Rated Power: ⩽ 50mW

ORDER INFORMATION

KLS6-MF58-XXX F XXXX

Part Number
MF58 Glass Shell Precision NTC Thermistors Series
Rated Resistance
Tolerance: F-± 1% G-± 2% H-± 3% J-± 5%
B value: 3650 namely 3650k

Carbon Film Fixed Resistors Series

KLS6-Carbon Film Fixed Resistors Series

1.Features

- Temperature Range -55 ° C ~ +155 ° C
- ± 5% tolerance
- High quality performance at economical prices
- Compatible with automatic insertion equipment
- Flame retardant type available
- Weldable type with copper plated lead wire available
- Values below 1Ω or above 10MΩ are available by special request, please ask for details

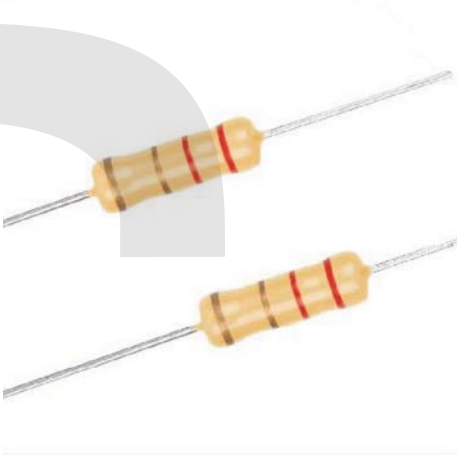

Dimension (Unit: mm)

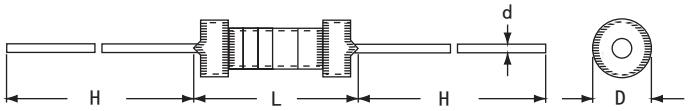

style	power (70℃)	Dimension (mm)				Max. working voltage	Max. Permission voltage	Insulation dielectric strength	Resistance range
		D Max.	L Max.	0.02 / d -0.05	H±3				
STANDARD SIZE									
RCB	1/8W	1.85	3.5	0.5	28	200V	400V	400V	1Ω～10MΩ
RCC	1/4W	2.5	6.8	0.6	28	250V	500V	500V	1Ω～10MΩ
RCE	1/2W	3.5	10	0.6	28	350V	700V	700V	1Ω～10MΩ
RCF	1W	5	12	0.7	28	500V	1000V	1000V	1Ω～10MΩ
RCG	2W	5.5	16	0.8	28	500V	1000V	1000V	1Ω～10MΩ
Small size									
RCB	1/4W	1.85	3.5	0.5	28	200V	400V	400V	1Ω～10MΩ
RDC	1/2W	2.5	6.8	0.6	28	250V	500V	500V	1Ω～10MΩ
ROE	1W	3.5	10	0.6	28	500V	1000V	1000V	1Ω～10MΩ
ROF	2W	5	12	0.7	28	500V	1000V	1000V	1Ω～10MΩ
ROG	3W	5.5	16	0.8	28	500V	1000V	1000V	1Ω～10MΩ

■ DERATING CURVE

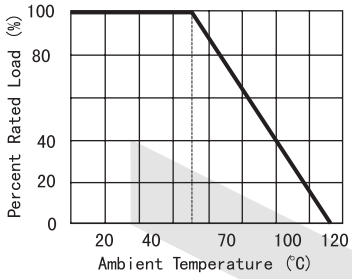

■ CURRENT NOISE

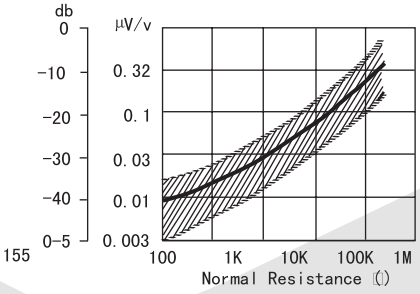

■ TEMPERATURE COEFFICIENT

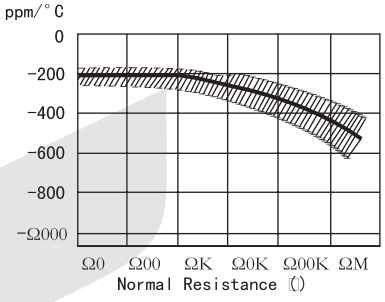

ORDER INFORMATION

KLS6-CF-1/8W- 103 K R

- KLS6-CF-1/8W- : Part Number / Carbon Film Fixed Resistors / Power
- 103 : Standard Values
- K : Tolerance: J = ± 5%
- R : Packing Type: A = Tape / Box R = Tape / Reel B = Bulk / Box

Carbon Film Fixed Resistors Series

KLS6-Carbon Film Fixed Resistors Series

■ CHARACTERISTICS

Characteristics	Limits		Test Methods (JIS C 5201-1)
DC. Resistance	Must be within the specified tolerance.		5.1 The limit of error of measuring apparatus shall not exceed allowable range or 5% of resistance tolerance
Temperature coefficient	Resist. Range	T.C.R. (PPM / °C)	5.2 Natural resistance change per temp. degree centigrade. $\frac{R_2-R_1}{R_1(t_2-t_1)}$ x106 (PPM/°C) R_1: Resistance value at room temperature (t_1) R_2: Resistance value at room temp.plus 100°C (t_2)
	< 10 Ω 11Ω ~ 99K 100K ~ 1M 1.1M ~ 10M	0 ~ ±350 0 ~ -450 0 ~ -700 0 ~ -1500	
Short time overload	Resistance change rate is ± (1 % + 0.05Ω) Max. with no evidence of mechanical damage		5.5 Permanent resistance change after the application of a potential of 2.5 times RCWV for 5 seconds.
Insulation Resistance	Insulation resistance is 10,000 MΩ Min		5.6 Resistors shall be clamped in the trough of a 90° metallic V-block and shall be tested at DC potential respectively specified in the above list for 60 +10/ -0 seconds.
Dielectric withstanding voltage	No evidence of flashover mechanical damage,arcing or insulation break down.		5.7 Resistors shall be clamped in the trough of a 90° metallic V-block and shall be tested at AC potential respectively specified in the table 1 for 60 + 10/-0 seconds.
Terminal strength	No evidence of mechanical damage.		6.1 **Direct load** Resistance to a 2.5 kgs direct load for 10 secs. in the direction of the longitudinal axis of the terminal leads. **Twist test :** Terminal leads shall be bent through 90° at a point of about 6mm from the body of the resistor and shall be rotated through 360° about the original axis of the bent terminal in alternating direction for a total of 3 rotations.
Resistance to soldering heat	Resistance change rate is ± (1% + 0.05Ω) Max. with no evidence of mechanical damage.		6.4 Permanent resistance change when leads immersed to 3.2 to 4.8 mm from the body in 350 °C ± 10°C solder for 3 ± 0.5 seconds
Solderability	95 % coverage Min.		6.5 The area covered with a new , smooth clean , shiny and continuous surface free from concentrated pinholes. Test temp. of solder : 245°C ± 3°C Dwell time in solder : 2 ~ 3 seconds
Temperature cycling	Resistance change rate is ± (1% + 0.05Ω) Max. with no evidence of mechanical damage.		7.4 Resistance change after continuous 5 cycles for duty shown below:

Step	Temperature	Time
1	-55°C ±3°C	30 mins
2	Room temp.	10~15 mins
3	+155°C ±2°C	30 mins
4	Room temp.	10~15 mins

Load life in humidity	Resistance value		ΔR/R	7.9 Resistance change after 1,000 hours operating at RCWV with duty cycle of (1.5 hours "on", 0.5 hour "off") in a humidity test chamber controlled at 40°C ± 2°C and 90 to 95 % relative humidity
	Normal Type	< than 100KΩ	± 3 %	
		>100KΩ	± 5 %	
Load life	Resistance value		ΔR/R	7.10 Permanent resistance change after 1,000 hours operating at RCWV with duty cycle of (1.5 hours "on", 0.5 hour "off") at 70°C ± 2°C ambient
	Normal Type	< than 56KΩ	± 2 %	
		> 56KΩ	± 3 %	

ORDER INFORMATION

KLS6-CF-1/8W- 103 K R

- KLS6-CF-1/8W- : Part Number / Carbon Film Fixed Resistors / Power
- 103 : Standard Values
- K : Tolerance: J = ± 5%
- R : Packing Type: A = Tape / Box R = Tape / Reel B = Bulk / Box

KLS electronic
www.cnkls.com

VI

Precision Metal Film Fixed Resistors Series

KLS6-Precision Metal Film Fixed Resistors Series

1.Features

- EIA standard color-coding
- Non - Flame type available
- Low noise & voltage coefficient
- Low temperature coefficient range
- Wide precision range in small package
- Too low or too high ohmic value can be supplied on a case-to-case basis
- Nichrome resistor element provides stable performance in various environments
- Multiple epoxy coating on vacuum-deposited metal film provides superior moisture protection

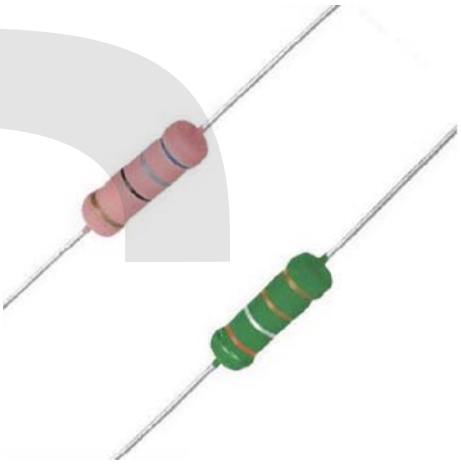

Dimension (Unit: mm)

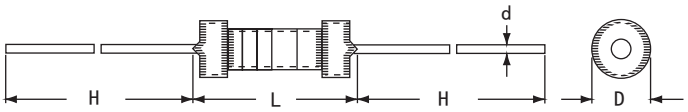

style	power (70℃)	SIZE (mm)			
		D Max.	L Max.	d+0.02 −0.05	H±3
STANDARD SIZE					
RMB	1/8W	1.85	3.5	0.5	28
RMC	1/4W	2.5	6.8	0.6	28
RME	1/2W	3.5	10	0.6	28
RME	1W	3.5	10	0.6	28
RMF	2W	5	12	0.7	28
RMG	3W	5.5	16	0.8	28
SMALL SIZE					
RNB	1/4W	1.85	3.5	0.5	28
RNC	1/2W	2.5	6.8	0.6	28
RND	1/2W	3	9	0.6	28
RNC	0.6W	2.5	6.8	0.6	28

ORDER INFORMATION

KLS6-MF-1/8W- 103 K R

- Part Number Precision Metal Film Fixed Resistors Series
- Power
- Standard Values
- Tolerance: F = ± 1%, J = ± 5%
- Packing Type: A = Tape / Box, R = Tape / Reel, B = Bulk / Box

Precision Metal Film Fixed Resistors Series

KLS6-Precision Metal Film Fixed Resistors Series

SIZE	INSULATION DIELECTRIC STRENGTH	Max. working voltage	Max. Permission voltage	標准訂購			特性訂購		
				ALLOW DERIATION	TAMPERATURE COEFFICIENT	Resistance range	ALLOW DERIATION	TAMPERATURE COEFFICIENT	Resistance range
RMB	400V	200V	400V	±1%	±50	10Ω～1MΩ	±0.25%	±15	51.1Ω～200KΩ
RNB	400V	200V	400V	±2%	±100	10Ω～1MΩ	±0.5%	±25	51.1Ω～511KΩ
				±5%	±200	10Ω～1MΩ	±0.5%	±50	51.1Ω～511KΩ
RMC	500V	250V	500V	±1%	±50	10Ω～1MΩ	±0.25%	±15	100Ω～100KΩ
				±2%	±100	10Ω～1MΩ	±0.5%	±25	51.1Ω～330KΩ
RNC	400V			±5%	±200	1Ω～1MΩ	±0.5%	±50	10Ω～1MΩ
RNC									
RND	700V	350V	700V	±1%	±50	10Ω～1MΩ	±0.1%	±15	100Ω～330KΩ
				±2%	±100	10Ω～1MΩ	±0.25%	±25	51.1Ω～511KΩ
				±5%	±200	1Ω～1MΩ	±0.5%	±50	10Ω～1MΩ
RME	1000V	500V	1000V	±1%	±50	51.1Ω～1MΩ	±0.1%	±15	100Ω～330KΩ
RMF				±2%	±100	51.1Ω～1MΩ	±0.25%	±25	51.1Ω～511KΩ
RMG				±5%	±200	10Ω～1MΩ	±0.5%	±50	51.1Ω～1MΩ

Current Noise Level

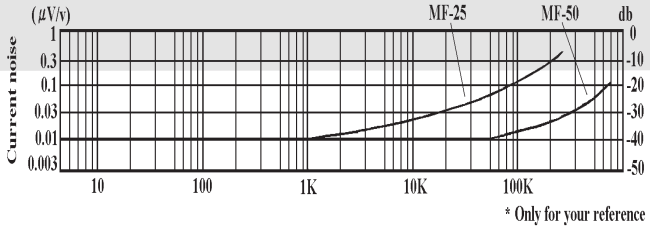

* Only for your reference

Derating Curve

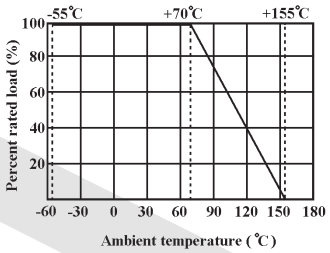

Load Life

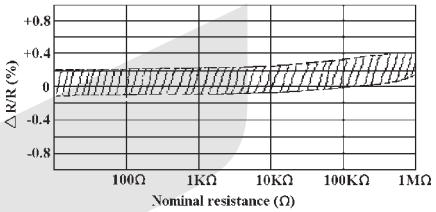

Metal Oxide Film Fixed Resistors Series

KLS6-Metal Oxide Film Fixed Resistors Series

Features

1. Good performance in moisture resistance, anti-oxidization, thermal stability, nonflammability, overload stability, stable and reliable long term operation.
2. Operating ambient temperature: -55ºC ~ +125ºC
3. The resistor's normal size coats brick red.

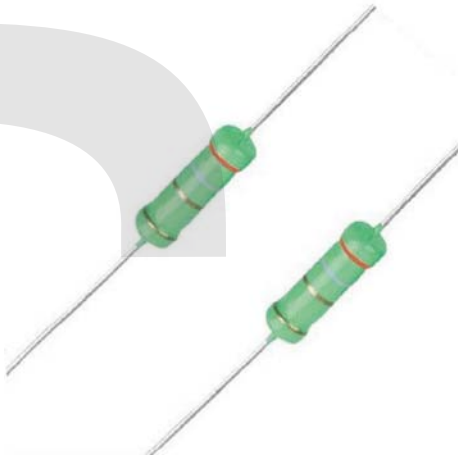

Dimension (Unit: mm)

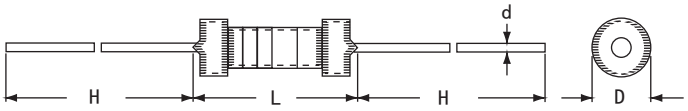

style	Power (70℃)	SIZE (mm)				Max. working voltage	Max. Permission voltage	Insulation dielectric strength	Resistance range
		D±1	L Max.	0.02 d -0.05	H±3				
STANDARD SIZE									
ROC	1/4W	2.5	6.8	0.6	28	200V	400V	250V	0.3Ω～50KΩ
ROE	1/2W	3.5	10	0.6	28	250V	500V	250V	0.3Ω～50KΩ
ROF	1W	5	12	0.7	28	350V	600V	350V	0.3Ω～50KΩ
ROG	2W	5.5	16	0.8	28	350V	800V	350V	0.3Ω～50KΩ
ROH	3W	6.5	17.5	0.8	28	500V	1000V	500V	5Ω～100KΩ
ROI	5W	8	25	0.8	38	750V	1000V	750V	5Ω～100KΩ
SMALL SIZE									
ROC	1/2W	2.5	6.8	0.6	28	250V	400V	250V	0.3Ω～50KΩ
ROE	1W	3.5	10	0.7	28	350V	600V	350V	0.3Ω～50KΩ
ROF	2W	5	12	0.7	28	350V	600V	350V	0.3Ω～50KΩ
ROG	3W	5.5	16	0.8	28	350V	600V	350V	0.3Ω～50KΩ
ROH	5W	6.5	17.5	0.8	28	500V	800V	500V	5Ω～100KΩ
ROI	7W	8	25	0.8	38	500V	800V	500V	5Ω～150KΩ

ORDER INFORMATION

KLS6-MOF-1/8W- 103 K R

- Part Number: KLS6-MOF-1/8W-
- Metal Oxide Film Fixed Resistors Series: MOF
- Power: 1/8W
- Standard Values: 103
- Tolerance: F = ± 1%, G = ± 2%, J = ± 5%, K = ± 10%
- Packing Type: A = Tape / Box, R = Tape / Reel, B = Bulk / Box

Metal Oxide Film Fixed Resistors Series

KLS6-Metal Oxide Film Fixed Resistors Series

Derating Curve

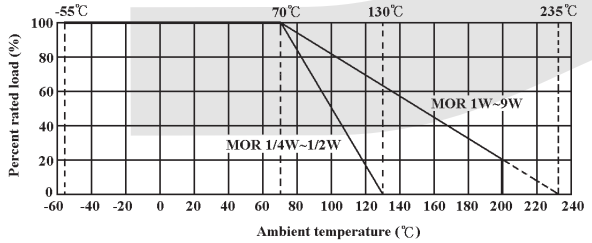

Heat Rise Chart

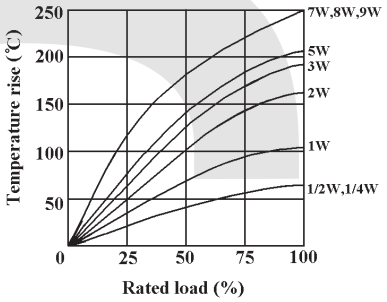

Electrical Performance

Item	Performance requirement	Test methods
Temperature Coefficient	-350ppm/℃≤ a ≤+350ppm/℃	JIS5202-5.2 -55℃ to +155℃ T.C.R=(R2-R1)×10^6/ R1 ×(T2-T1)(PPM/℃) R1:Resistance value at room temperature(T1); R2:Resistance value at room temperature+100℃ (T2)
Short Time Overload	ΔR≤±（1% R0+0.05Ω）	JIS-C-5202- 5.5 2.5 time RCWV for 5 seconds
Solderability	The area of soldering is over 95%	JIS-C-5202-6.5 Soldering Stove temperature:235±5℃ Dwell time in soldering stove:3±0.5sec
Pulse Overload	ΔR≤±（2% R0+0.05Ω）	JIS-C-5202- 5.8 4 times RCWV 10000 cycles (1 sec. on, 25 sec. off)
Load Life in Humidity	ΔR≤±（5% R0+0.1Ω）	JIS-C-5202- 7.9 40±2° C, 90～95% RH at RCWV for 1000 hrs. (1.5 hrs.on, 0.5 hrs. off)
Load Life	ΔR≤±（5% R0+0.1Ω）	JIS-C-5202-7.10 70° Cat RCWV for 1000 hrs. (1.5 hrs. on, 0.5 hrs. off)
Nonflammability	No visible flame	SJ 3272-4.2
Temperature Cycling	ΔR≤± (1% R0+0.05Ω)	JIS-C-5202- 7.4 -65° C→room temp.→150° C→room temp. for 5 cycles
Resistance to Soldering Heat	ΔR≤±（1%R0+0.05Ω）	JIS-C-5202- 6.4 350° C±10° C for 3±0.5 seconds

SMD Chip Resistors Series Series

KLS6-Power Rating Dimension SMD Chip Resistors Series

Features

- Small size and lightweight
- Suitable for both flow and reflow soldering
- Reduction of assembly costs and matching with placement machines

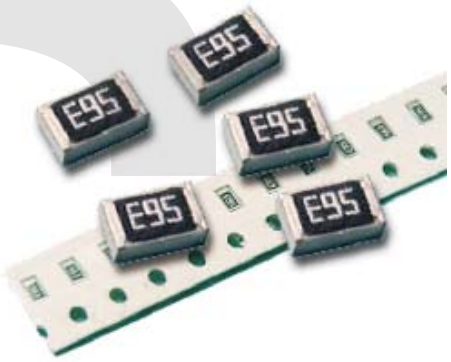

ORDER INFORMATION

1	2	0	6	S	4	J	0	1	2	J	T	5	E

Resistor Type:
Chip Resistor types as follows:
0402, 0603, 0805, 1206, 1210, 2010, 2512, 2D02, 4D02, 4D03, 10P8, 16P8

Wattage:
Normal size: WH=1/32W, WG=1/16W, WA=1/10W, W8=1/8W, W4=1/4W, W2=1/2W, 1W=1W

Small size: SA=1/10W-S, S8=1/8W-S, S4=1/4W-S, S3=1/3W-S, 07=3/4W-S

Resistance Value:
- E-24 series: the 1st digit is "0", the 2nd & 3rd digits are for the significant figures of the resistance and the 4th indicate the numbering of the zeros.
- E-96 series: the 1st to 3rd digits are for the significant figures of the resistance and the 4th digit indicate the number of zeros. "J" ~ 0.1, "K" ~ 0.01, "L" ~ 0.001
  Ex. 012J ~ 1Ω2, 226K ~ 2Ω26
- **Jumper :** use "0"

Tolerance:
F = ±1%, G = ±2%, J = ±5%
0 = Jumper

Packing Type:
T =Tape / Reel
B =Bulk in Poly-bag
C =Bulk in Cassette

Packing Qty:
1 = 1,000 pcs, 4 = 4,000 pcs,
5 = 5,000 pcs, : : 9 = 9,000 pcs,
A = 500 pcs, B = 2,500 pcs, C = 10,000 pcs, D = 20,000 pcs

** More explanation on part no, please see details on pages 79-80.*

Special Feature:
0 = NIL
E = Lead (Pb) Free Plating Type / RoHS Compliant

Note :
Special resistance value or tolerance or T.C.R. requirement available on a case-to-case basis. Please indicate when ordering.

SMD Chip Resistors Series Series

KLS6-Power Rating Dimension SMD Chip Resistors Series

Construction

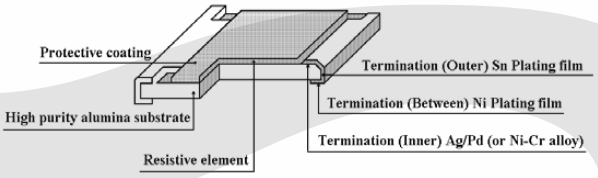

Power Rating & Dimension

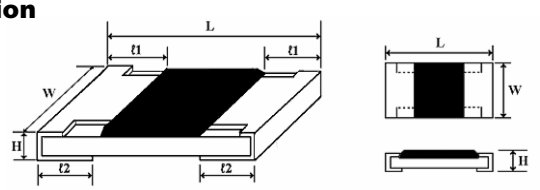

Type	Power Rating at 70℃	Max. Working Voltage	Max. Overload Voltage	Operating Temp. (℃)	Tolerance %	Resistance Range	Standard Series	Dimension (mm)				
								L	W	H	ℓ1	ℓ2
0402	1/16W	1A 50V	2A 100V	-55~+155	Jumper ±1 ±2 ±5	<50 m Ω 10 Ω -1M Ω 1 Ω -10M Ω 1 Ω -10M Ω	E-96 E-24 E-24	1.00±0.10	0.50±0.05	0.35±0.05	0.20±0.10	0.25±0.10
0603	1/10W-S 1/16W	1A 50V	2A 100V	-55~+155	Jumper ±1 ±2 ±5	< 50 m Ω 10 Ω -1M Ω 1 Ω -10M Ω 1 Ω -10M Ω	E-96 E-24 E-24	1.60±0.10	0.80 +0.15 -0.10	0.45±0.10	0.30±0.20	0.30±0.20
0805	1/8W-S 1/10W	2A 150V	4A 300V	-55~+155	Jumper ±1 ±2 ±5	< 50 m Ω 10 Ω -1M Ω 1 Ω -10M Ω 1 Ω -10M Ω	E-96 E-24 E-24	2.00±0.15	1.25 +0.15 -0.10	0.55±0.10	0.40±0.20	0.40±0.20
1206	1/4W-S 1/8W	2A 200V	4A 400V	-55~+155	Jumper ±1 ±2 ±5	< 50 m Ω 10 Ω -1M Ω 1 Ω -10M Ω 1 Ω -10M Ω	E-96 E-24 E-24	3.10±0.15	1.55 +0.15 -0.10	0.55±0.10	0.45±0.20	0.45±0.20
1210	1/3W-S 1/4W	2A 200V	4A 400V	-55~+155	Jumper ±1 ±2 ±5	< 50 m Ω 10 Ω -1M Ω 1 Ω -10M Ω 1 Ω -10M Ω	E-96 E-24 E-24	3.10±0.10	2.60±0.15	0.55±0.10	0.50±0.25	0.50±0.20
2010	3/4W-S 1/2W	2A 200V	4A 400V	-55~+155	Jumper ±1 ±2 ±5	< 50 m Ω 10 Ω -1M Ω 1 Ω -10M Ω 1 Ω -10M Ω	E-96 E-24 E-24	5.00±0.10	2.50±0.15	0.55±0.10	0.60±0.25	0.50±0.20
2512	1W	2.5A 200V	5A 400V	-55~+155	Jumper ±1 ±2 ±5	< 50 m Ω 10Ω-1M Ω 1Ω-10M Ω 1Ω-10M Ω	E-96 E-24 E-24	6.35±0.10	3.20±0.15	0.55±0.10	0.60±0.25	0.50±0.20

Derating Curve

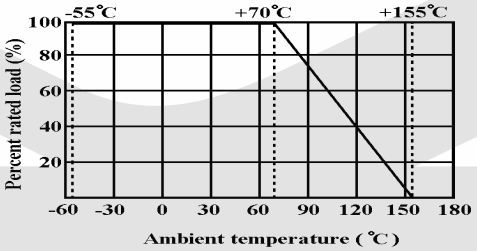

SMD Chip Resistors Series Series

KLS6-Power Rating Dimension SMD Chip Resistors Series

Multiplier Code(for 0603 1% marking)

Code	A	B	C	D	E	F	G	H	X	Y	Z
Multiplier	10^0	10^1	10^2	10^3	10^4	10^5	10^6	10^7	10^{-1}	10^{-2}	10^{-3}

Standard E-96 Series Resistance Value Code (for 0603 1% marking)

Ω Value	Code	Ω Value	Code	Ω Value	Code	Ω Value	Code	Ω Value	Code
100	01	162	21	261	41	422	61	681	81
102	02	165	22	267	42	432	62	698	82
105	03	169	23	274	43	442	63	715	83
107	04	174	24	280	44	453	64	732	84
110	05	178	25	287	45	464	65	750	85
113	06	182	26	294	46	475	66	768	86
115	07	187	27	301	47	487	67	787	87
118	08	191	28	309	48	499	68	806	88
121	09	196	29	316	49	511	69	825	89
124	10	200	30	324	50	523	70	845	90
127	11	205	31	332	51	536	71	866	91
130	12	210	32	340	52	549	72	887	92
133	13	215	33	348	53	562	73	909	93
137	14	221	34	357	54	576	74	931	94
140	15	226	35	365	55	590	75	953	95
143	16	232	36	374	56	604	76	976	96
147	17	237	37	383	57	619	77		
150	18	243	38	392	58	634	78		
154	19	249	39	402	59	649	79		
158	20	255	40	412	60	665	80		

Marking on the Resistors Body:

- For 0402 size, no marking on the body due to the small size of the resistor.
- ±5% tolerance product. (Including resistance values less than 1Ω; both 1% and 5%) The marking is 3 digits, the first 2 digits are the significant figures of the resistance and the 3rd digit denotes number of zeros.

153 = 15000Ω = 15KΩ; **120** = 12Ω



Below 10Ω shown as this: **6R8** = 6.8Ω



- 1% tolerance marking of case size 0805 and bigger is 4 digits, the first 3 digits are the significant figures of the resistance and the 4th digit denotes number of zeros.

2372 = 23700Ω = 23.7KΩ; **1430** = 143Ω



Below 10Ω shown as this: **3R24** = 3.24Ω



SMD Chip Resistors Series Series

KLS6-Power Rating Dimension SMD Chip Resistors Series

- Standard E-96 series values (±1% tolerance) of 0603 size. Due to the small size of the resistor's body, 3 digits marking will be used to indicate the accurate resistance value by using the Multiplier code & Standard E-96 Series Resistance Value Code as shown on Page 6.

1.96KΩ = 196 x 10^{1} Ω = **29B**



12.4Ω = 124 x 10^{-1} Ω = **10X**



- Standard E-24 series values which does not belong to E-96 series values (±1% tolerance) of 0603 size. The marking is the same as 5% tolerance but mark with underline.

122 = 1200 = 1.2KΩ



680 = 68Ω



Performance Specifications

Temperature coefficient	±5%: 1Ω ~ 10MΩ ≤ ±200PPM/°C
	±1%: 10Ω ~ 100Ω ≤ ±200PPM/°C; 101Ω ~ 1MΩ ≤ ±100PPM/°C
Short-time overload	±5%: ±(2.0% + 0.1Ω) Max.
	±1%: ±(1.0% + 0.1Ω) Max.
Insulation resistance	Min. 1,000 Mega Ohm
Dielectric withstanding voltage	No evidence of flashover, mechanical damage, arcing or insulation breakdown
Terminal bending	±(1.0% + 0.05Ω) Max.
Soldering heat	±(1.0% + 0.05Ω) Max.
Solderability	Min. 95% coverage
Temperature cycling	±5%: ±(1.0% + 0.05Ω) Max.
	±1%: ±(0.5% + 0.05Ω) Max.
Humidity (Steady state)	±5%: ±(3.0% + 0.1Ω) Max.
	±1%: ±(0.5% + 0.1Ω) Max.
Load life in humidity	±5%: ±(3.0% + 0.1Ω) Max.
	±1%: ±(1.0% + 0.1Ω) Max.
Load life	±5%: ±(3.0% + 0.1Ω) Max.
	±1%: ±(1.0% + 0.1Ω) Max.

** The values which are not of standard E-24 series (2% & 5%) and not of E-96 series (1%) could be offered on a case to case basis.*

VI

Sip Thick Film Resistor Network

KLS6-Sip Thick Film Resistor Network Series

FEATURES

- Miniature, high density assembly.
- Stable electrical capability, high reliability.
- Combinations of different ohmic value are available

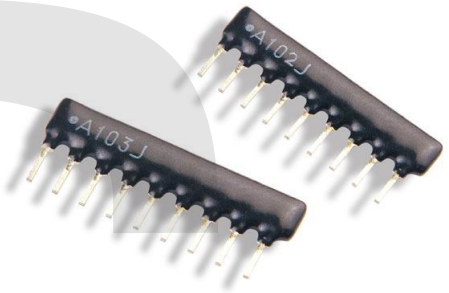

CONSTRUCTION AND DIMENSIONS

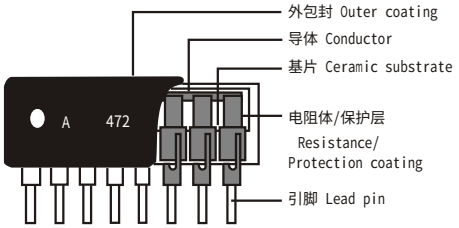

注:白色点标记为第一脚
Note: The white dot means the first pin.

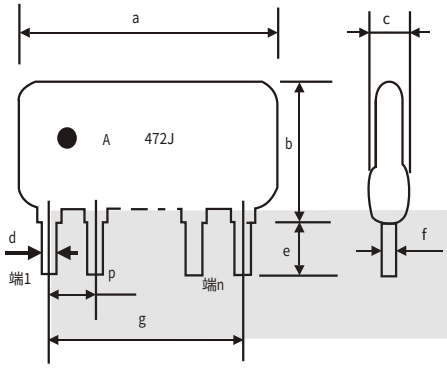

单位 unit:mm

代号 Code	常规尺寸 Normal dimension		特殊尺寸 Special dimension	
a	2.54×(n-1)+2.5max		1.778×(n-1)+1.5max	
b	A、B、C、D、E、F、G、H 型 Type	5.08max	A、B、C、D、E、F、G、H 型 Type	5.08max
	T 型 Type	8.50max	T 型 Type	8.50max
c	3.00max		3.00max	
d	0.50±0.1		0.50±0.1	
e	3.50±0.5		3.50±0.5	
f	0.25±0.1		0.30±0.1	
g	2.54×(n-1)±0.3		1.778×(n-1)±0.3	
p	2.54±0.1		1.778±0.1	

ORDER INFORMATION

A	08	4	7	2	/				J	

电路结构代码 Circuits Code

A
B
C
D
E
F
G
H
T

引脚数 Number of pins

04~14

电阻值代号1 Resistance Value Code 1

三位数（E—24系列）：
前两位表示有效数字，第三位表示有效数字后零的个数
Three digits (E-24 series): The first two digits are significant figures and the third one denotes number of zeros.

电阻值代号 2 Resistance Value Code 2

当表示A、B、C、D、G型产品时，该部分无表示。
当表示E、F、H、T型产品时，该部分表示法与“电阻值代号1”相同。
When it is the type of A,B,C, D or G, there is no mark.
When it is the type of E,F,H or T, the expression is same as “Resistance Value Codel”.

电阻值误差精度代号 Resistance Tolerance Code

代号 Code	误差精度 Tolerance
F	±1%
G	±2%
J	±5%
J (跨接电阻 Jumper)	≤50mΩ

脚距代号 Code of pin distance

无表示 No mark	2.54mm
(0.07)	1.778mm

Sip Thick Film Resistor Network

KLS6-Sip Thick Film Resistor Network Series

- EQUIVALENT CIRCUIT

型 号 Type	等 效 电 路 Equivalent Circuit	型 号 Type	等 效 电 路 Equivalent Circuit
A	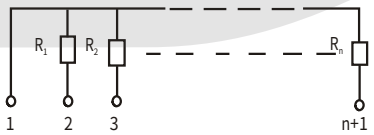 $R_1=R_2=\cdots\cdots=R_n$	B	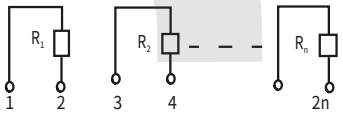 $R_1=R_2=\cdots\cdots=R_n$
C	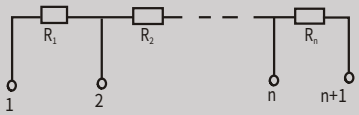 $R_1=R_2=\cdots\cdots=R_n$	D	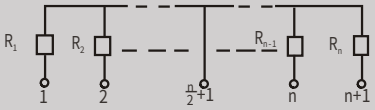 $R_1=R_2=\cdots\cdots=R_n$
E	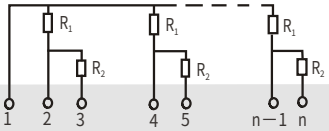 $R_1=R_2$或$R_1\neq R_2$	F	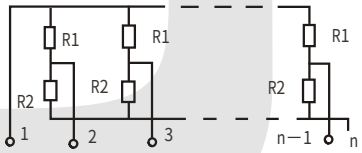 $R_1=R_2$或$R_1\neq R_2$
G	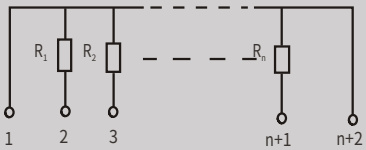 $R_1=R_2=\cdots\cdots=R_n$	H	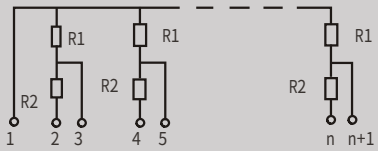 $R_1=R_2$或$R_1\neq R_2$
T	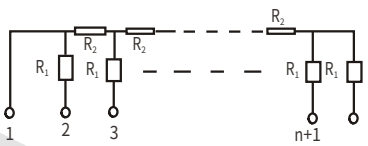 $R_1=R_2$或$R_1\neq R_2$		

- REFERENCE STANDARD

GB/T 5729-94
GB 7338-87
JIS C 5202-1985

Sip Thick Film Resistor Network

KLS6-Sip Thick Film Resistor Network Series

VI

- IEC E-24 Series Resistance Cross-reference List

E-24 系列 E-24 Series ($\times 10^n\Omega$)

(单位unit:1Ω、10Ω、100Ω、1KΩ、10KΩ、100KΩ、1MΩ)

1.0	1.5	2.2	3.3	4.7	6.8
1.1	1.6	2.4	3.6	5.1	7.5
1.2	1.8	2.7	3.9	5.6	8.2
1.3	2.0	3.0	4.3	6.2	9.1

- DERATING CURVE

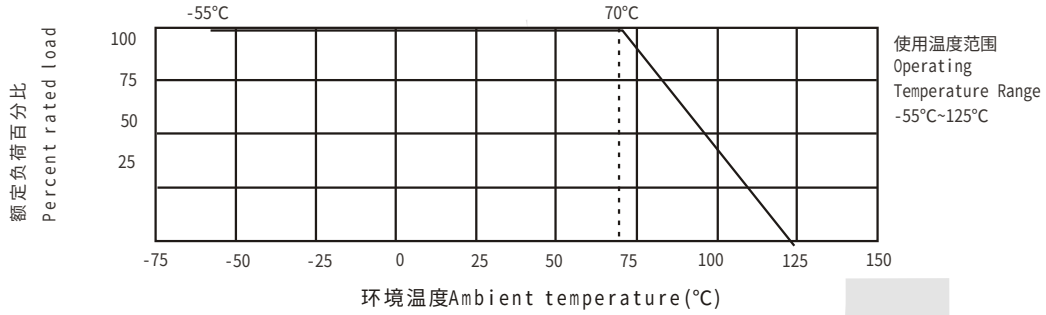

＊ 当电阻使用的环境温度超过70℃时，其额定负荷(额定功率或额定电流)按上述曲线下降。
For resistors operated in ambient over 70℃, rated load (power rating or current rating) shall be derated in accordance with above figure.

- RATINGS

项　目 Item	标　准 Specification
额定功率 Power Rating	1/8w(1/4w)
最大工作电压 Max. Working Voltage	200V
最大过负荷电压 Max. Overload Voltage	280V
跨接电阻额定电流 Jumper Rated Current	2A
电阻温度系数 Resistance Temperature Coefficient	10Ω≤R≤1MΩ：±100ppm/℃ 1Ω≤R<10Ω,1MΩ<R≤10M：±250ppm/℃
阻值误差精度 Resistance Tolerance	±1%，±2%，±5%，跨接电阻 Jumper：≤50mΩ
阻值范围 Resistance Range	0Ω（跨接电阻Jumper）、1.0Ω~10MΩ E—24系列
使用温度范围 Operating Temperature Range	—55℃~125℃
额定温度 Rated Temperature	+70℃

＊ 注：额定电压＝$\sqrt{\text{额定功率}\times\text{标称电阻值}}$ 或最大工作电压中的较小值。
Note: Rated Voltage= $\sqrt{\text{Power Rating}\times\text{Resistance Value}}$ or Max. Working Voltage, whichever is lower.

Sip Thick Film Resistor Network

KLS6-Sip Thick Film Resistor Network Series

- CHARACTERISTICS

项目 Item	标 准 Specifications	测试方法（JIS C 5202 标准） Test Methods （JIS C 5202）
电阻温度系数 T. C. R	±100ppm/℃、±250ppm/℃	−55℃~125℃ 30~50分钟 −55℃~125℃ 30~50min
短时间过负载 Short Time Overload	无可见损伤，No mechanical damage ΔR≤±(2.0%R+0.05Ω) 跨接电阻 Jumper：R≤50mΩ	2.5倍额定电压或最大过负荷电压（取最小者） 保持5秒 2.5×Rated voltage or Max. Overload Voltage, choose the lower , for 5 seconds
包封绝缘阻抗 Coating Insulation Resistane	绝缘阻抗值大于100MΩ 100MΩ Min	施加 500V DC Apply 500V DC
包封绝缘耐电压 Coating Insulation Withstand Voltage	无弧光，燃烧及本体被击穿 No arc, inflammation and damage	施加500V DC 保持1min Apply 500V DC 1min
可焊性 Solderability	可焊面积≥95% 95%Cover Min	235℃±5℃ 2±0.5秒 235℃±5℃ 2±0.5S
耐溶剂性 Resistance to Solvent	无可见损伤，No mechanical damage ΔR≤±(1.0%R+0.05Ω) 跨接电阻 Jumper：R≤50mΩ	浸入三氯乙烯 10±1小时 Dip in chloroethylene for 10h±1h.
阻 然 性 Resistance to inflammation	V-0	VL-94
引线强度 Pin strength	无可见损伤，No mechanical damage ΔR≤± (1.0%R+0.05Ω) 跨接电阻 Jumper：R≤50mΩ	将引线焊接在网络电阻的受试引出端后，拉力到500g止 Speed:10mm/s, pull strength:500g.
抗弯强度 Bending strength	无可见损伤 No mechanical damage	端子线末端负重0.5kg,使电阻器本体与端子线弯成90°，保持5s，为一个循环，做2个循环 Force with 0.5kg on the terminal pin,between the resistor and the terminal pin is 90 degree,duration: 5s for 1 cycle。 total 2 cycles
振动试验 vibration	无可见损伤,No mechanical damage ΔR≤± (1.0%R+0.05Ω) 跨接电阻 Jumper：R≤50mΩ	10HZ → 55HZ → 10HZ 1min 内完成，振幅1.55mm，上述方法 X、Y、Z 三个方向各振动 2 小时 10HZ → 55HZ → 10HZ within 1 min, swing:1.55mm, three directions for X、Y、Z for 2 hours
耐焊接热 Resistance to Soldering Heat	无可见损伤，No mechanical damage ΔR≤± (1.0%R+0.05Ω) 跨接电阻 Jumper：R≤50mΩ	260℃±5℃ 10±1秒 260℃±5℃ 10s±1s
温度循环 Temperature Cycling	无可见损伤，ΔR≤± (1.0%R+0.05Ω) No mechanical damage	-55℃ (30分钟) ~常温 (15分钟) ~125℃ (30分钟) 5个循环 -55℃ (30min) ~normal temperature (15min) ~125℃ (30min) 5cycles

Sip Thick Film Resistor Network

KLS6-Sip Thick Film Resistor Network Series

项目 Item	标 准 Specifications	测试方法（JIS C 5202 标准） Test Methods （JIS C 5202）
稳态湿热 Steady state humidity	无可见损伤，No mechanical damage ΔR≤± （3.0%R+0.1Ω） 跨接电阻 Jumper：R≤100mΩ	40℃±2℃ 90%~95%RH1000小时 40℃±2℃ 90%~95%RH1000h
70℃耐久性 Load Life(70℃)	无可见损伤，No mechanical damage ΔR≤± （3.0%R+0.1Ω） 跨接电阻 Jumper：R≤100mΩ	70℃±2℃， 1000小时， 额定电压，通1.5小时，断0.5小时 70℃±2℃ 1000h， Rated voltage, 1.5h on/0.5h off
上限类别温度耐久性 Endurance at upper temperature	无可见损伤，No mechanical damage ΔR≤± （3.0%R+0.1Ω） 跨接电阻 Jumper：R≤100mΩ	125℃±2℃ 1000小时 125℃±2℃ 1000h

KLS electronic
www.cnkls.com

VI

Cement Fixed Resistors Series

KLS6-SQP Cement Fixed Resistors Series

Features

1. Good heat-durability, Low temperature coefficient, low noise, high load power, high insulating capacity, nonflammability.
2. Operating ambient temperature: -55°C ~ +275°C

Dimension (unit: mm)

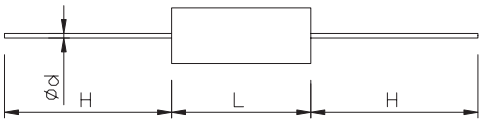

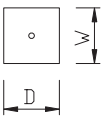

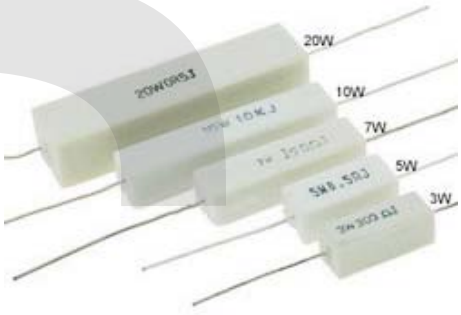

Type	Dimension (mm)					Resistance Range	
	W±1	D±1	L±1	d±0.05	H±5	Wire-wound	Metal Oxide Film
Normal Size							
SQP-2W	6.4	6.4	18	0.7	28	0.1Ω-27Ω	20Ω-40KΩ
SQP-3W	8	8	22	0.7	28	0.1Ω-39Ω	30Ω-62KΩ
SQP-5W	9.5	9.5	22	0.8	28	0.1Ω-47Ω	40Ω-120KΩ
SQP-7W	9.5	9.5	35	0.8	35	0.1Ω-680Ω	510Ω-250KΩ
SQP-10W	9.5	9.5	48.5	0.8	35	0.1Ω-910Ω	820Ω-250KΩ
SQP-15W	12.5	12.5	48.5	0.8	35	1Ω-1KΩ	
SQP-20W	14.5	12.5	60	0.8	35	2Ω-1.2KΩ	
SQP-25W	14.5	12.5	64	0.8	35	2Ω-1.5KΩ	
Small Size							
SQPS-3W	6	6	20	0.6	28	0.1Ω-27Ω	20Ω-40KΩ
SQPS-5W	6	6	25	0.7	35	0.1Ω-100Ω	100Ω-100KΩ
SQPS-7W	9	9	25	0.8	35	0.1Ω-100Ω	100Ω-100KΩ

ORDER INFORMATION

KLS6 - SQP - 2W - 100R J

- KLS6 - Part Number
- SQP - Cement Fixed Resistors Type
- 2W - Rated Power
- 100R - Resistance Value (Ω)
  - 0R1= 0.1Ω
  - 100R =100Ω
  - 1K =1KΩ
  - 100K= 100KΩ
- J - Resistance Tolerance (%): J=±5%

Cement Fixed Resistors Series

KLS6-SQP Cement Fixed Resistors Series

Item	Performance requirement	Test methods
Temperature Coefficient	Wire coiling:	JIS5202-5.2
	-300ppm/℃≤ a ≤+300ppm/℃	-55℃ to +155℃
	Oxide rod:	T.C.R=(R2-R1)×10?6/ R1 ×(T2-T1)(PPM/℃)
	-350ppm/℃≤ a ≤+350ppm/℃	R1:Resistance value at room temperature(T1);
		R2:Resistance value at room temperature+100℃ (T2)
Short time overload	ΔR≤± (2% RO+0.1Ω)	JIS5202-5.5
		2.5times RCWV for 5 seconds
Resistance to soldering heat	ΔR≤ ± (1%RO+0.05Ω)	JIS5202-6.4
		350℃±10℃ for3±0.5 seconds
Solderability	The area of soldering is over 95%	JIS5202-6.5
		235℃for5±0.5 seconds
Temperature cycling	ΔR≤± (5% RO+0.1Ω)	JIS5202-7.4
		→65℃→room temp. →150℃→room temp.
		for 5 cycles
Load life in moisture	ΔR≤± (5% RO+0.1Ω)	JIS5202-7.9
		40±2℃,90～95% RH at RCWV for 1000 hrs.
		(1.5 hrs. on, 0.5 hrs. off)
Nonflammability	No visible flame	SJ3272-4.2

Derating Curve

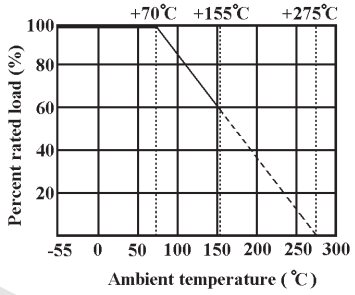

Heat Rise Chart

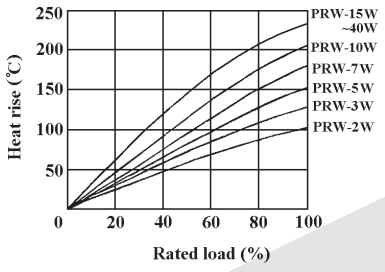

KLS electronic
www.cnkls.com

VI

Cement Fixed Resistors Series

KLS6-SQM Cement Fixed Resistors Series

Features

1. Good heat-durability, Low temperature coefficient, low noise, high load power, high insulating capacity, nonflammability.
2. Operating ambient temperature: -55°C ~ +275°C

Dimension (unit: mm)

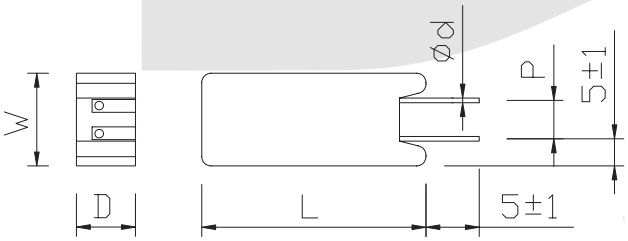



Type	Dimension (mm)					Resistance Range	
	W±1	D±1	L±1	d±0.05	P±1	Wire-wound	Metal Oxide Film
Normal Size							
SQM-2W	11.5	7.5	20	0.7	5	0.1Ω-27Ω	20Ω-40KΩ
SQM-3W	12.5	8.5	25	0.7	5	0.1Ω-39Ω	30Ω-62KΩ
SQM-5W	12.5	9	25	0.8	5	0.1Ω-47Ω	40Ω-120KΩ
SQM-7W	12.5	9	38	0.8	5	0.1Ω-680Ω	510Ω-250KΩ
SQM-10W	12.5	9	50	0.8	5	0.1Ω-910Ω	820Ω-250KΩ
Small Size							
SQMA-5W	12.5	9	25	0.8	7.5	0.1Ω-47Ω	40Ω-120KΩ
SQMA-7W	12.5	9	38	0.8	7.5	0.1Ω-680Ω	510Ω-250KΩ
SQMA-10W	16	12	35	0.8	7.5	0.1Ω-910Ω	820Ω-250KΩ

Heat Rise Chart

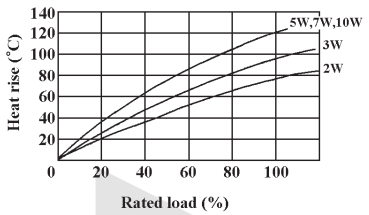

ORDER INFORMATION

KLS6 - SQM - 2W - 100R J

- KLS6 - Part Number
- SQM - Cement Fixed Resistors Type
- 2W - Rated Power
- 100R - Resistance Value (Ω)
  - 0R1= 0.1Ω
  - 100R =100Ω
  - 1K =1KΩ
  - 100K= 100KΩ
- J - Resistance Tolerance (%): J=±5%

KLS electronic
www.cnkls.com

VI

Cement Fixed Resistors Series

KLS6-SQZ Cement Fixed Resistors Series

Features

1. Good heat-durability, Low temperature coefficient, low noise, high load power, high insulating capacity, nonflammability.
2. Operating ambient temperature: -55°C ~ +275°C

Dimension (unit: mm)

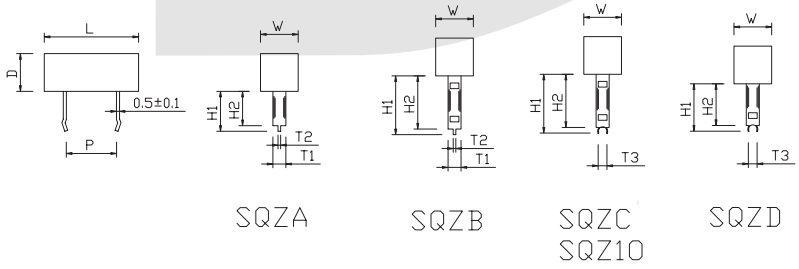

SQZA SQZB SQZC SQZ10 SQZD



Type	Dimension (mm)									Resistance Range	
	W±1	D±1	L	P±1.5	T1±1	T2±0.2	T3±0.5	H1±2	H1±2	Wire-wound	Metal Oxide Film
SQZA-3W	10	9	22±1	9.5	7	1.6	-	24	10	0.1Ω-47Ω	48Ω-40KΩ
SQZB-3W						1.6	-	39	25		
SQZC-3W						1.5	3.5	36	22		
SQZD-3W						1.3	3.5	24	10		
SQZA-5W	10	9	27/25	15/8.5	7	1.6	-	24	10	0.1Ω-120Ω	121Ω-62KΩ
SQZB-5W			27±1	15		1.6	-	39	25		
SQZC-5W						1.5	3.5	36	22		
SQZ1C-5W						1.3	3.5	39	24		
SQZD-5W						1.3	3.5	24	10		
SQZA-7W	10	9	35±1	22	7	1.6	-	24	10	0.1Ω-560Ω	561Ω-120KΩ
SQZB-7W						1.6	-	39	25		
SQZC-7W						1.5	3.5	36	22		
SQZ1C-7W						1.3	3.5	39	24		
SQZD-7W						1.3	3.5	24	10		
SQZA-10W	10	9	48±1.5	35/32	7	1.6	-	24	10	0.1Ω-820Ω	820Ω-120KΩ
SQZB-10W						1.6	-	39	25		
SQZC-10W						1.5	3.5	36	22		
SQZD-10W						1.3	3.5	24	10		
SQZA-15W	12.5	11.5	48±1.5	32	10	3	-	35	15	1Ω-1KΩ	-
SQZB-15W						3	-	47	30		
SQZC-15W						2	5	47	30		
SQZA-20W	12.5	13.5	63±1.5	45	10	3	-	35	15	1Ω-1.5KΩ	-
SQZB-20W						3	-	47	30		
SQZC-20W						2	5	47	30		

Heat Rise Chart

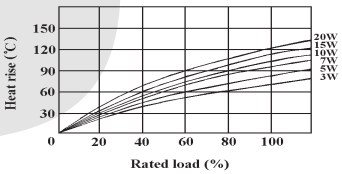

ORDER INFORMATION

KLS6 - SQZA - 3W - 100R J

- KLS6 — Part Number
- SQZA — Cement Fixed Resistors Type
- 3W — Rated Power
- 100R — Resistance Value (Ω)
  - 0R1= 0.1Ω
  - 100R =100Ω
  - 1K =1KΩ
  - 100K= 100KΩ
- J — Resistance Tolerance (%): J=±5%

Photosensitive Resistor

VI

Application:

Camera auto-metering
Photoelectric control
Interior light control
Light control music IC
Industrial control
Light control switch
Light control lights
Light-controlled toys.

Features:

Epoxy resin package
Fast response
Small size
High sensitivity
Good stability

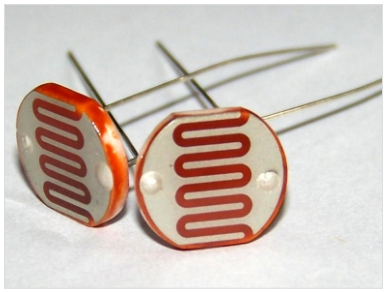

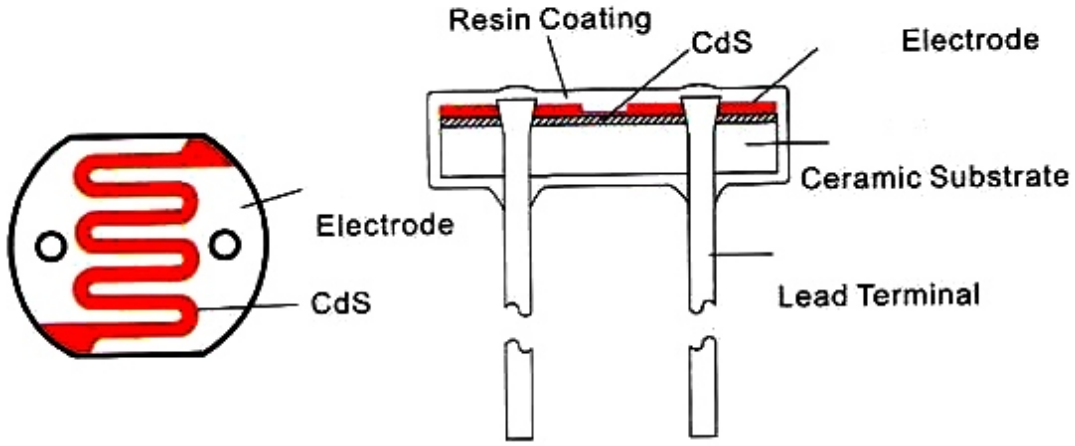

Ordering information:

KLS P/N:	Diameter	Max. Voltage	Max. Power Rate	Ambient operating temperature	Spectral response peak/at 25℃	Light resistance at 10Lux	Darkness resistance at 0 Lux	Gamma Value	Response time(ms)	
	(mm)	(VDC)	(MW)	(℃)	(nm)	(KΩ)	(MΩ)	at 100~10Lux	Increase	Decrease
KLS3526	Φ3mm	150	50	-30¡ æ +70¡ æ	540nm	8 ~ 20 KΩ	0.5 MΩ	0.6	30	30
KLS3537						18 ~ 50 KΩ	2.0 MΩ	0.7		
KLS3548						45 ~ 140 KΩ	5.0 MΩ	0.8		
KLS4526	Φ4mm	150	50	-30¡ æ +70¡ æ	540nm	8 ~ 20 KΩ	0.5 MΩ	0.6	30	30
KLS4537						18 ~ 50 KΩ	2.0 MΩ	0.7		
KLS4548						45 ~ 140 KΩ	5.0 MΩ	0.8		
KLS5506	Φ5mm	150	90 MW	-30¡ æ +70¡ æ	540nm	2 ~ 6 KΩ	0.2 MΩ	0.6	30	30
KLS5516						5 ~ 10 KΩ	0.2 MΩ	0.6		
KLS5528			100 MW			8 ~ 20 KΩ	1.0 MΩ	0.7	20	30
KLS5537						18~ 50 KΩ	2.0 MΩ	0.7		
KLS5539						30 ~ 90 KΩ	5.0 MΩ	0.8		
KLS5549						45 ~ 140 KΩ	10.0 MΩ	0.8	30	30
KLS5516D					560nm	5 ~ 10 KΩ	1.0 MΩ	0.6	20	30
KLS5626D						8 ~ 20 KΩ	2.0 MΩ	0.6		
KLS5637D						18~ 50 KΩ	5.0 MΩ	0.7		
KLS5639D						30 ~ 90 KΩ	8.0 MΩ	0.8		
KLS5649D						45 ~ 160 KΩ	20.0 MΩ	0.8		

Photosensitive Resistor

KLS P/N:	Diameter	Max. Voltage	Max. Power Rate	Ambient operating temperature	Spectral response peak/at 25℃	Light resistance at 10Lux	Darkness resistance at 0 Lux	Gamma Value	Response time(ms)	
	(mm)	(VDC)	(MW)	(℃)	(nm)	(KΩ)	(MΩ)	at 100~10Lux	Increase	Decrease
KLS5526F	Φ5m 3Pins	150	100 MW	-30¡ æ +70¡ æ	540nm	8 ~ 20 KΩ	0.5 MΩ	0.6	30	30
KLS5537F						18~ 50 KΩ	1.0 MΩ	0.7		
KLS5549F						45 ~ 140 KΩ	5.0 MΩ	0.8		
KLS7516	Φ7mm	150	100 MW	-30¡ æ +70¡ æ	560nm	4 ~ 10 KΩ	0.5 MΩ	0.6	20	30
KLS7528			150 MW			8~ 20 KΩ	2.0 MΩ	0.7		
KLS7638						18 ~ 50 KΩ	5.0 MΩ	0.8		
KLS7649						45 ~ 140 KΩ	10.0 MΩ	0.8		
KLS9516	Φ9mm	150	100 MW	-30¡ æ +70¡ æ	540nm	4 ~ 10 KΩ	0.5 MΩ	0.6	30	30
KLS9528			150 MW		560nm	8~ 20 KΩ	2.0 MΩ	0.7		
KLS9638						18 ~ 50 KΩ	5.0 MΩ	0.8		
KLS9549						45 ~ 140 KΩ	8.0 MΩ	0.8		
KLS11528	Φ11mm	250	200 MW	-30¡ æ +70¡ æ	560nm	8 ~ 20 KΩ	2.0 MΩ	0.6	20	30
KLS11537						18~ 50 KΩ	5.0 MΩ	0.7		
KLS11549						45 ~ 140 KΩ	10.0 MΩ	0.8	30	30
KLS12528	Φ12mm	250	200 MW	-30¡ æ +70¡ æ	560nm	8 ~ 20 KΩ	2.0 MΩ	0.6	20	30
KLS12537						18~ 50 KΩ	5.0 MΩ	0.7		
KLS12549						45 ~ 140 KΩ	10.0 MΩ	0.8	30	30
KLS20528	Φ20mm	500	500 MW	-30¡ æ +70¡ æ	560nm	8 ~ 20 KΩ	2.0 MΩ	0.6	30	30
KLS20537						18~ 50 KΩ	5.0 MΩ	0.7		
KLS20549						45 ~ 140 KΩ	10.0 MΩ	0.8		
KLS25528	Φ25mm	500	500 MW	-30¡ æ +70¡ æ	560nm	8 ~ 20 KΩ	2.0 MΩ	0.6	30	30
KLS25537						18~ 50 KΩ	5.0 MΩ	0.7		
KLS25549						45 ~ 140 KΩ	10.0 MΩ	0.6		

Cermet Potentiometer Series

KLS4-3006 Cermet Potentiometer Series

Electrical characteristics

Standard Resistance Range:10Ω ~ 2MΩ
Resistance Tolerance: ± 10%
Terminal Resitance:≤1%R or 2Ω Max
Contact Resistance Vartion:CRV≤3%R or 3Ω Max
Insulation Resistance:R_1≥1GΩ
Withstand Voltage: 640VAC
Maximum Wiper Current: 100mA
Effective electrical travel: 30±2 turns nom



Environmental characteristics

Power Rating (300 volts max.):70 °C :0.5 W, 125 °C:0 W
Temperature Range : -55°C ~ +125°C
Temperature Coeffi cient : ±250ppm/°C , ±100ppm/°C
Vibration: 390m/s2, 4000 cycles, △R≤±5%R
Collision: 10 ~ 500Hz, 0.75mm, or 98m /s^2, 6h, △R≤±5% R,
△(Uab / Uac) ≤±7.5%
Temperature Variation: 30min, 5 cycle, △R≤±5% R,△(Uab / Uac) ≤±5%
Climate category: △R≤±3%R, R_1≥100MΩ
70°C Electrical endurance: 0.5W, 1000h,△R≤±3%R
Mechanical endurance: 200 cycles,△R≤±10%R, CRV≤3%R or 5Ω
Steady damp heat:△R≤±10%R, R_1≥100MΩ

Physical characteristics

Total mechanical travel :30±2cycles
Staring torque : ≤35mN. m
Standard packaging: 50pcs/tube

Resistance (Ω)	Code
10	100
20	200
50	500
100	101
200	201
500	501
1000	102
2000	202
10000	103
20000	203
50000	503
100000	104
200000	204
500000	504
1000000	105
2000000	205

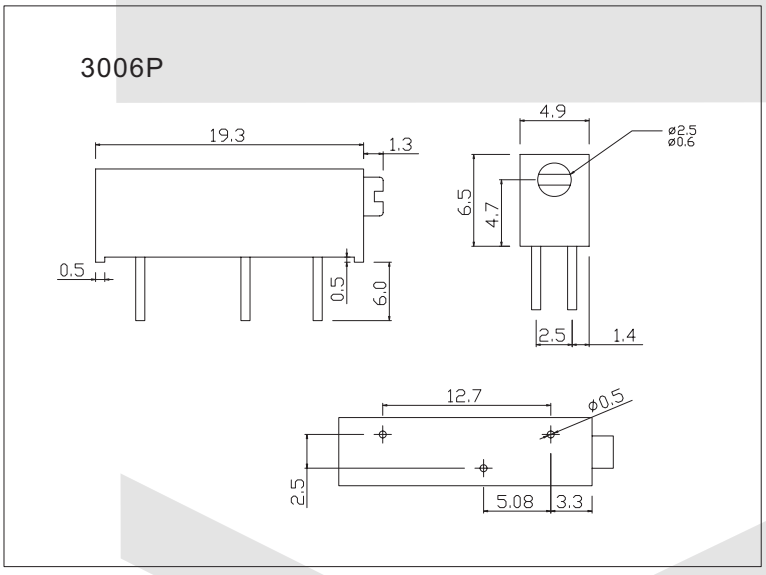

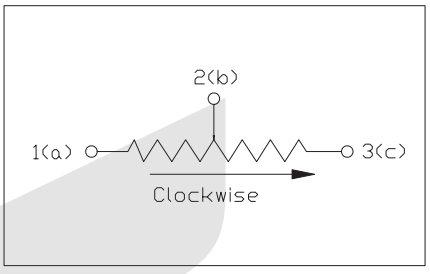

ORDER INFORMATION

Product NO.: KLS4-3006 P-103

Pos. NO.
3006:Model
103:Resistance Code
P:Style

Cermet Potentiometer Series

KLS4-3059 Cermet Potentiometer Series

Electrical characteristics

Standard Resistance Range:10Ω ~ 2MΩ
Resistance Tolerance: ± 10%
Terminal Resitance:≤1%R or 2Ω Max
Contact Resistance Vartion:CRV≤3%R or 3Ω Max
Insulation Resistance:R_1≥1GΩ
Withstand Voltage: 640VAC
Maximum Wiper Current: 100mA
Effective electrical travel: 30±2 runs nom

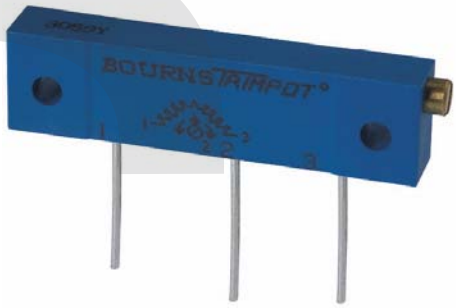

Environmental characteristics

Power Rating (300 volts max.):70 °C :0.5 W, 125 °C:0 W
Temperature Range : -55°C ~ +125°C
Temperature Coeffi cient : ±250ppm/°C , ±100ppm/°C
Vibration: 390m/s2, 4000 cycles, △R≤±5%R
Collision: 10 ~ 500Hz, 0.75mm, or 98m /s^2, 6h, △R≤±5% R,
△(Uab / Uac) ≤±7.5%
Temperature Variation: 30min, 5 cycle, △R≤±5% R,△(Uab / Uac) ≤±5%
Climate category: △R≤±3%R, R_1≥100MΩ
70°C Electrical endurance: 0.5W, 1000h,△R≤±3%R
Mechanical endurance: 200 cycles,△R≤±10%R, CRV≤3%R or 5Ω
Steady damp heat:△R≤±10%R, R_1≥100MΩ

Physical characteristics

Total mechanical travel :30±2cycles
Staring torque : ≤35mN. m
Standard packaging: 50pcs/tube

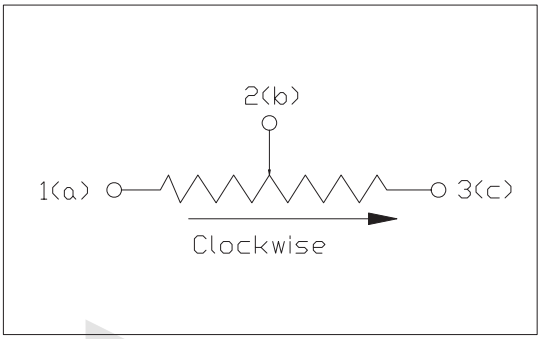

Resistance (Ω)	Code
10	100
20	200
50	500
100	101
200	201
500	501
1000	102
2000	202
10000	103
20000	203
50000	503
100000	104
200000	204
500000	504
1000000	105
2000000	205

ORDER INFORMATION

Product NO.: KLS4-3059 P-103

Pos. NO.
3059:Model
103:Resistance Code
P:Style

Cermet Potentiometer Series

KLS4-3059 Cermet Potentiometer Series

3059L

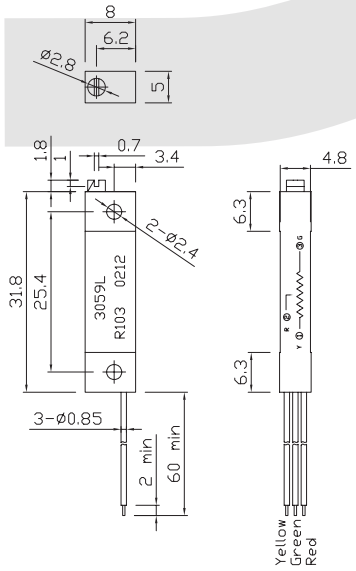

3059Y

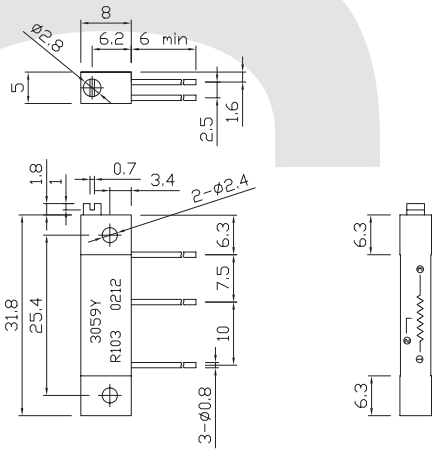

3059P

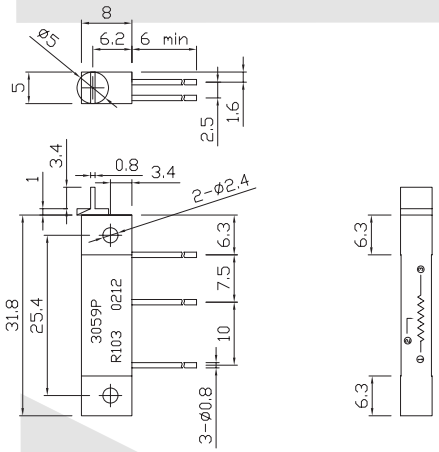

3059T

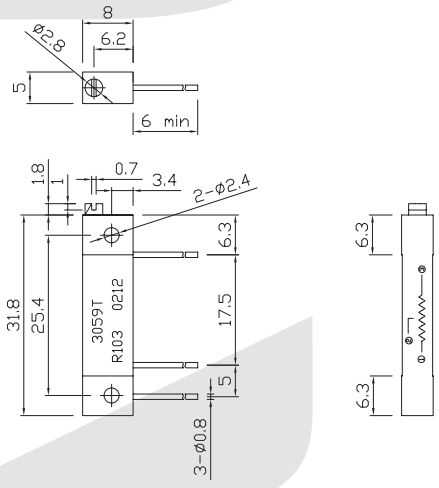

ORDER INFORMATION

Product NO.: KLS4-3059 P-103

- Pos. NO. 004=004 pos.
- 3059:Model
- P:Style
- 103:Resistance Code

Cermet Potentiometer Series

KLS4-3224 Cermet Potentiometer Series

Electrical characteristics

Standard Resistance Range:10Ω ~ 2MΩ
Resistance Tolerance: ± 10%
Terminal Resitance:≤1%R or 2Ω Max
Contact Resistance Vartion:CRV≤3%R or 3Ω Max
Insulation Resistance:R_1≥1GΩ
Withstand Voltage: 640VAC
Maximum Wiper Current: 100mA
Effective electrical travel: 30±2 runs nom



Environmental characteristics

Power Rating (300 volts max.):70 °C :0.5 W, 125 °C:0 W
Temperature Range : -55°C ~ +125°C
Temperature Coeffi cient : ±250ppm/°C , ±100ppm/°C
Vibration: 390m/s2, 4000 cycles, △R≤±5%R
Collision: 10 ~ 500Hz, 0.75mm, or 98m /s^2, 6h, △R≤±5% R,
△(Uab / Uac) ≤±7.5%
Temperature Variation: 30min, 5 cycle, △R≤±5% R,△(Uab / Uac) ≤±5%
Climate category: △R≤±3%R, R_1≥100MΩ
70°C Electrical endurance: 0.5W, 1000h,△R≤±3%R
Mechanical endurance: 200 cycles,△R≤±10%R, CRV≤3%R or 5Ω
Steady damp heat:△R≤±10%R, R_1≥100MΩ

Physical characteristics

Total mechanical travel :30±2cycles
Staring torque : ≤35mN. m
Standard packaging: 50pcs/tube

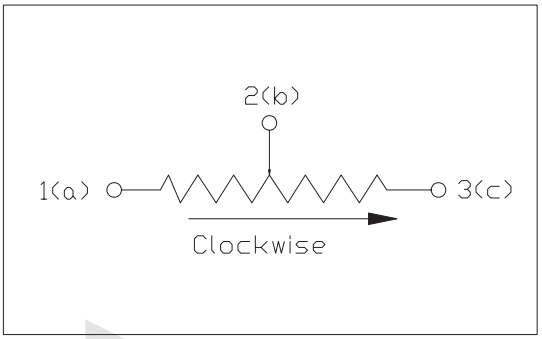

Resistance (Ω)	Code
10	100
20	200
50	500
100	101
200	201
500	501
1000	102
2000	202
10000	103
20000	203
50000	503
100000	104
200000	204
500000	504
1000000	105
2000000	205

ORDER INFORMATION

Product NO.: KLS4-3224 W-103

Pos. NO.
3224:Model
103:Resistance Code
W:Style

Cermet Potentiometer Series

KLS4-3224 Cermet Potentiometer Series

3224W

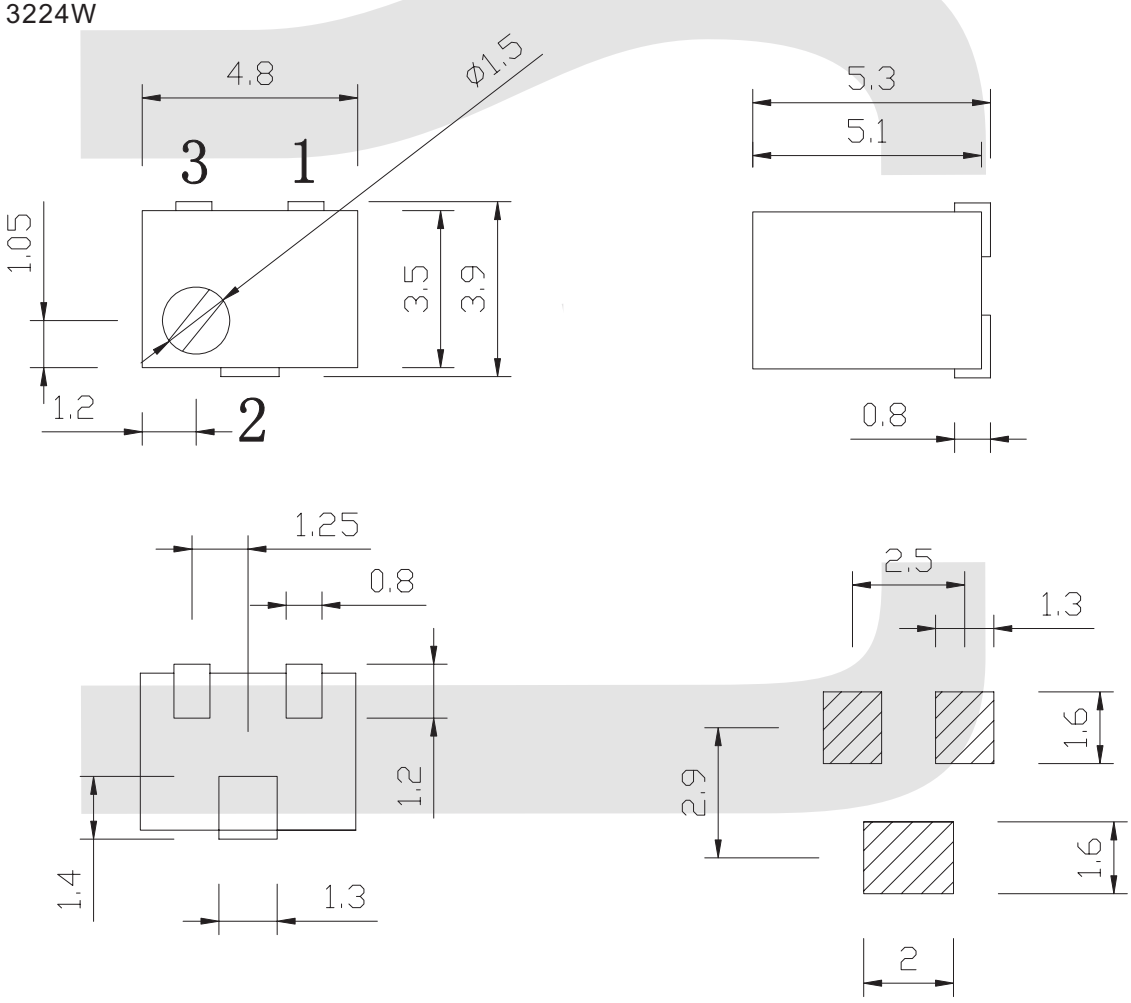

PCB Layout

ORDER INFORMATION

Product NO.: KLS4-3224 W-103

Pos. NO.
3224:Model
103:Resistance Code
W:Style

Cermet Potentiometer Series

KLS4-3224 Cermet Potentiometer Series

IV

3224J

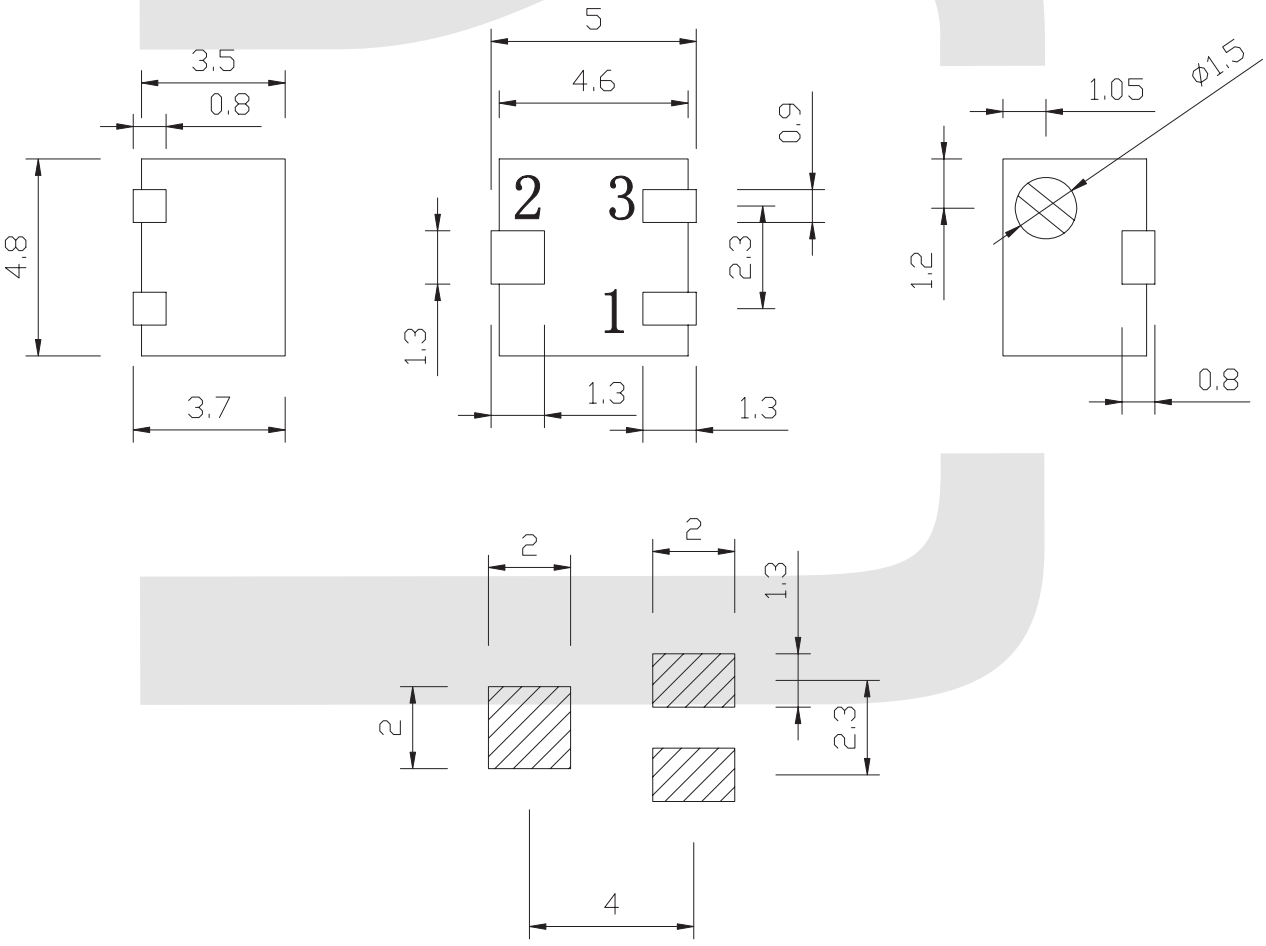

ORDER INFORMATION

Product NO.: KLS4-3224 J -103

Pos. NO.

3224:Model

J:Style

103:Resistance Code

Cermet Potentiometer Series

KLS4-3266 Cermet Potentiometer Series

Electrical characteristics

Standard Resistance Range:10Ω ~ 2MΩ
Resistance Tolerance: ± 10%
Terminal Resitance:≤1%R or 2Ω Max
Contact Resistance Vartion:CRV≤3%R or 3Ω Max
Insulation Resistance:R_1≥1GΩ
Withstand Voltage: 640VAC
Maximum Wiper Current: 100mA
Effective electrical travel: 30±2 runs nom

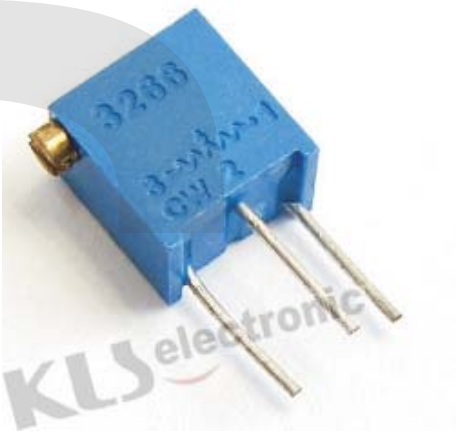

Environmental characteristics

Power Rating (300 volts max.):70 °C :0.5 W, 125 °C:0 W
Temperature Range : -55°C ~ +125°C
Temperature Coeffi cient : ±250ppm/°C , ±100ppm/°C
Vibration: 390m/s2, 4000 cycles, △R≤±5%R
Collision: 10 ~ 500Hz, 0.75mm, or 98m /s^2, 6h, △R≤±5% R,
△(Uab / Uac) ≤±7.5%
Temperature Variation: 30min, 5 cycle, △R≤±5% R,△(Uab / Uac) ≤±5%
Climate category: △R≤±3%R, R_1≥100MΩ
70°C Electrical endurance: 0.5W, 1000h,△R≤±3%R
Mechanical endurance: 200 cycles,△R≤±10%R, CRV≤3%R or 5Ω
Steady damp heat:△R≤±10%R, R_1≥100MΩ

Physical characteristics

Total mechanical travel :30±2cycles
Staring torque : ≤35mN. m
Standard packaging: 50pcs/tube

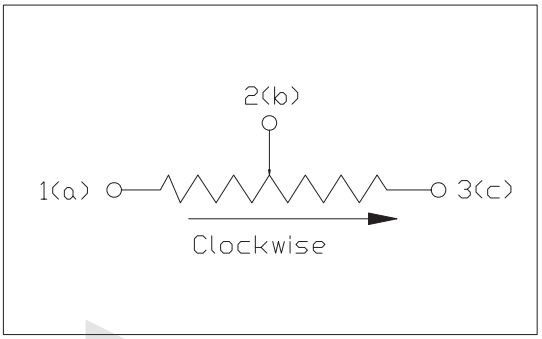

Resistance (Ω)	Code
10	100
20	200
50	500
100	101
200	201
500	501
1000	102
2000	202
10000	103
20000	203
50000	503
100000	104
200000	204
500000	504
1000000	105
2000000	205

ORDER INFORMATION

Product NO.: KLS4-3266 W-103

Pos. NO.
3266:Model
103:Resistance Code
W:Style

Cermet Potentiometer Series

KLS4-3266 Cermet Potentiometer Series

3266W

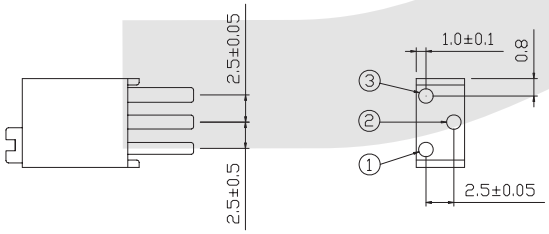

3266Y

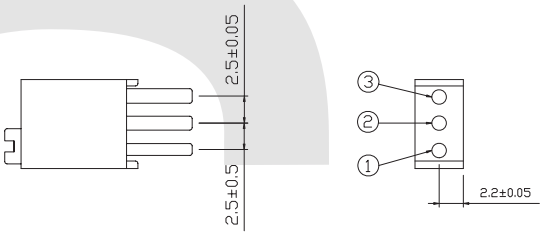

3266X

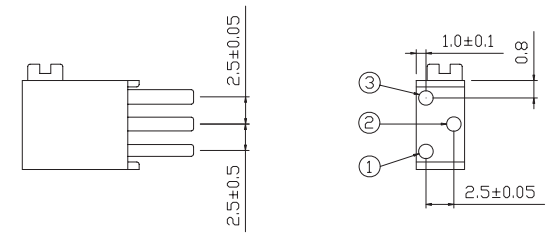

3266Z

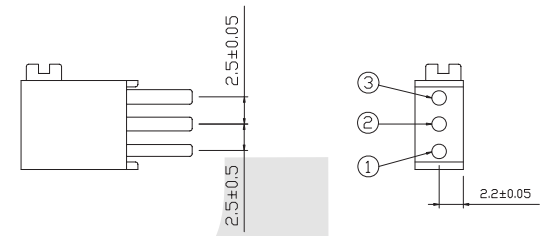

3266P

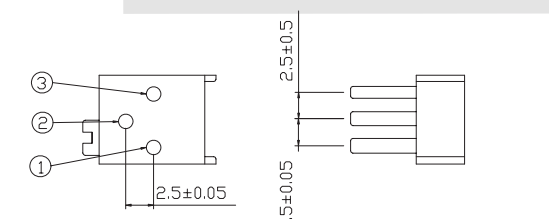

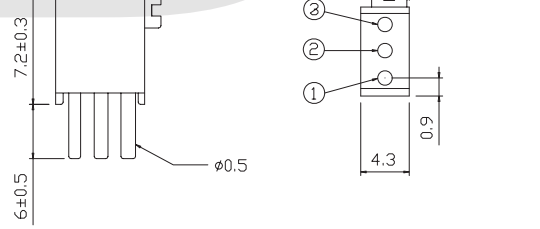

ORDER INFORMATION

Product NO.: KLS4-3266 W-103

- Pos. NO.
- 3266:Model
- W:Style
- 103:Resistance Code

Cermet Potentiometer Series

KLS4-3266 Cermet Potentiometer Series

Electrical characteristics

Standard Resistance Range:10Ω ~ 2MΩ
Resistance Tolerance: ± 10%
Terminal Resitance:≤1%R or 2Ω Max
Contact Resistance Vartion:CRV≤3%R or 3Ω Max
Insulation Resistance:R_1≥1GΩ
Withstand Voltage: 640VAC
Maximum Wiper Current: 100mA
Effective electrical travel: 30±2 runs nom

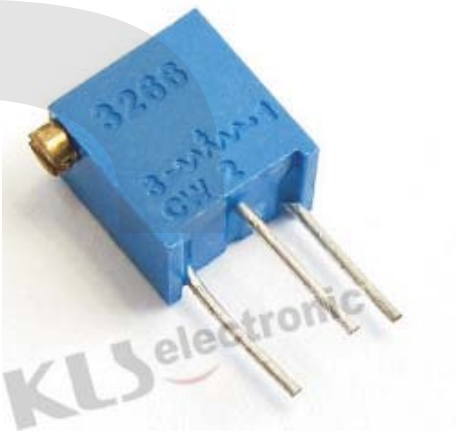

Environmental characteristics

Power Rating (300 volts max.):70 °C :0.5 W, 125 °C:0 W
Temperature Range : -55°C ~ +125°C
Temperature Coeffi cient : ±250ppm/°C , ±100ppm/°C
Vibration: 390m/s2, 4000 cycles, △R≤±5%R
Collision: 10 ~ 500Hz, 0.75mm, or 98m /s^2, 6h, △R≤±5% R,
△(Uab / Uac) ≤±7.5%
Temperature Variation: 30min, 5 cycle, △R≤±5% R,△(Uab / Uac) ≤±5%
Climate category: △R≤±3%R, R_1≥100MΩ
70°C Electrical endurance: 0.5W, 1000h,△R≤±3%R
Mechanical endurance: 200 cycles,△R≤±10%R, CRV≤3%R or 5Ω
Steady damp heat:△R≤±10%R, R_1≥100MΩ

Physical characteristics

Total mechanical travel :30±2cycles
Staring torque : ≤35mN. m
Standard packaging: 50pcs/tube

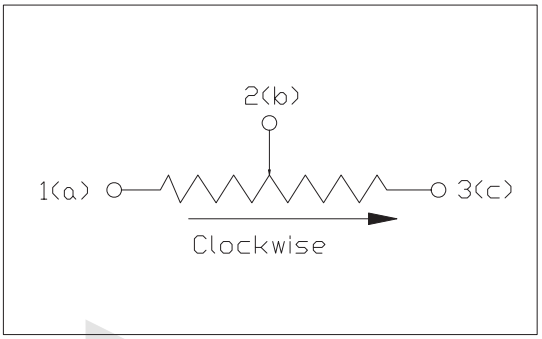

Resistance (Ω)	Code
10	100
20	200
50	500
100	101
200	201
500	501
1000	102
2000	202
10000	103
20000	203
50000	503
100000	104
200000	204
500000	504
1000000	105
2000000	205

ORDER INFORMATION

Product NO.: KLS4-3266 W-103

Pos. NO.
3266:Model
103:Resistance Code
W:Style

Cermet Potentiometer Series

KLS4-3266 Cermet Potentiometer Series

3266W

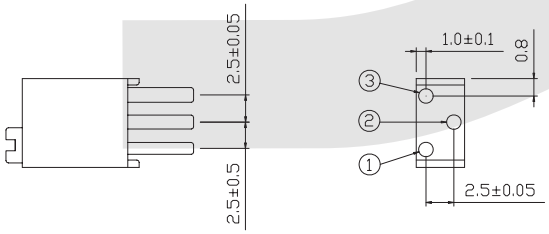

3266Y

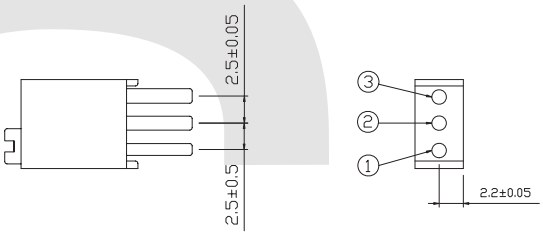

3266X

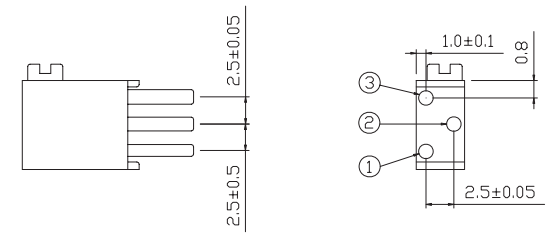

3266Z

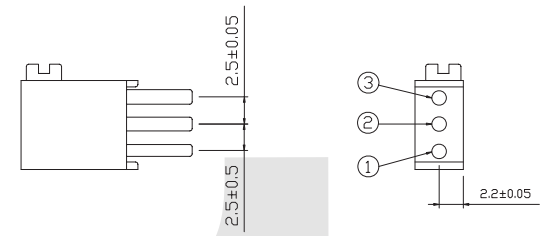

3266P

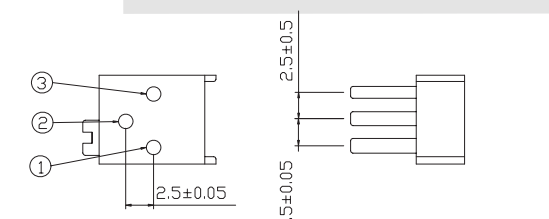

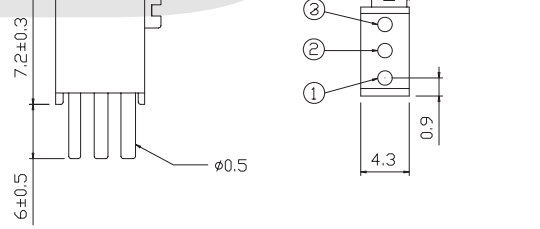

ORDER INFORMATION

Product NO.: KLS4-3266 W-103

- Pos. NO.
- 3266:Model
- W:Style
- 103:Resistance Code

Cermet Potentiometer Series

KLS4-3362 Cermet Potentiometer Series

Electrical characteristics

Standard Resistance Range:10Ω ~ 2MΩ
Resistance Tolerance: ± 10%
Terminal Resitance:≤1%R or 2Ω Max
Contact Resistance Vartion:CRV≤3%R or 3Ω Max
Insulation Resistance:R_1≥1GΩ
Withstand Voltage: 640VAC
Maximum Wiper Current: 100mA
Effective electrical travel: 30±2 runs nom

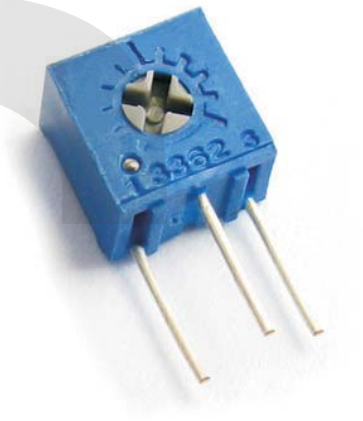

Environmental characteristics

Power Rating (300 volts max.):70 °C :0.5 W, 125 °C:0 W
Temperature Range : -55°C ~ +125°C
Temperature Coeffi cient : ±250ppm/°C , ±100ppm/°C
Vibration: 390m/s2, 4000 cycles, △R≤±5%R
Collision: 10 ~ 500Hz, 0.75mm, or 98m /s^2, 6h, △R≤±5% R,
△(Uab / Uac) ≤±7.5%
Temperature Variation: 30min, 5 cycle, △R≤±5% R,△(Uab / Uac) ≤±5%
Climate category: △R≤±3%R, R_1≥100MΩ
70°C Electrical endurance: 0.5W, 1000h,△R≤±3%R
Mechanical endurance: 200 cycles,△R≤±10%R, CRV≤3%R or 5Ω
Steady damp heat:△R≤±10%R, R_1≥100MΩ

Physical characteristics

Total mechanical travel :30±2cycles
Staring torque : ≤35mN. m
Standard packaging: 50pcs/tube

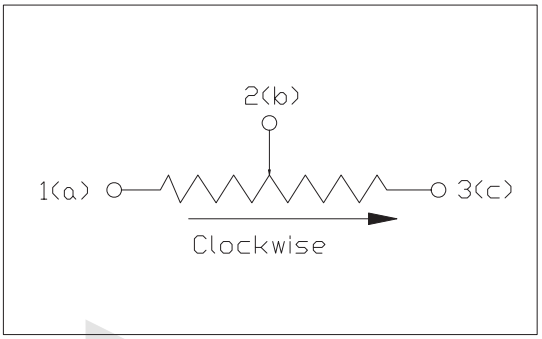

Resistance (Ω)	Code
10	100
20	200
50	500
100	101
200	201
500	501
1000	102
2000	202
10000	103
20000	203
50000	503
100000	104
200000	204
500000	504
1000000	105
2000000	205

ORDER INFORMATION

Product NO.: KLS4-3362 W-103

Pos. NO.
3362:Model
103:Resistance Code
W:Style

KLS electronic
www.cnkls.com

Cermet Potentiometer Series

KLS4-3362 Cermet Potentiometer Series

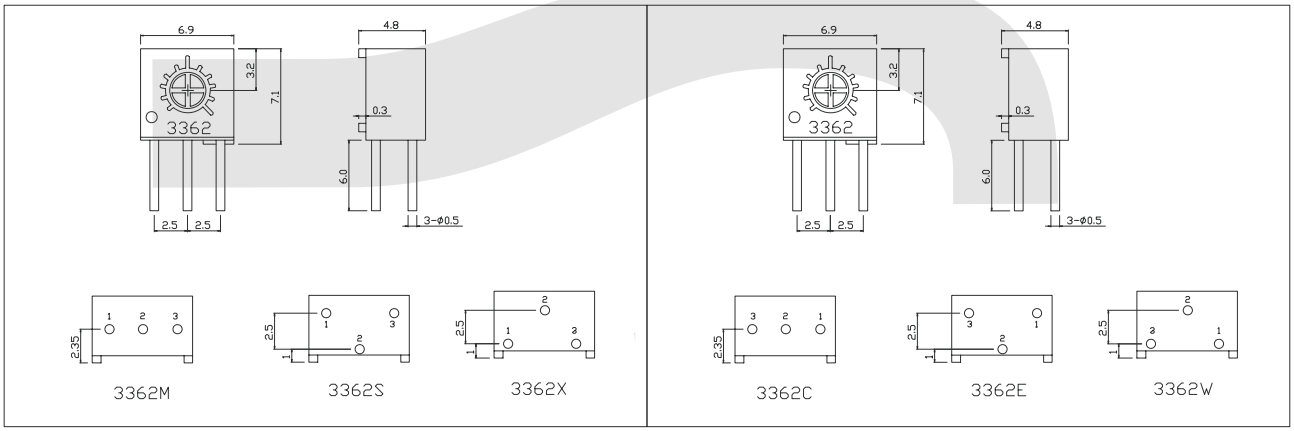

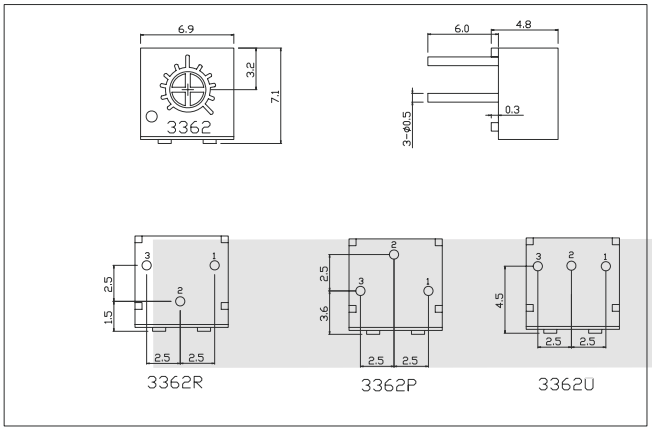

ORDER INFORMATION

Product NO.: KLS4-3362 W-103

- Pos. NO.
- 3362:Model
- W:Style
- 103:Resistance Code

Cermet Potentiometer Series

KLS4-3329 Cermet Potentiometer Series



Electrical characteristics

Standard Resistance Range:10Ω ~ 2MΩ
Resistance Tolerance: ± 10%
Terminal Resitance:⩽1%R or 2Ω Max
Contact Resistance Vartion:CRV⩽3%R or 3Ω Max
Insulation Resistance:R_1⩾1GΩ
Withstand Voltage: 640VAC
Maximum Wiper Current: 100mA
Effective electrical travel: 30±2 turns nom

Environmental characteristics

Power Rating (300 volts max.):70 °C :0.5 W, 125 °C:0 W
Temperature Range : -55°C ~ +125°C
Temperature Coeffi cient : ±250ppm/°C , ±100ppm/°C
Vibration: 390m/s2, 4000 cycles, △R⩽±5%R
Collision: 10 ~ 500Hz, 0.75mm, or 98m /s^2, 6h, △R⩽±5% R,
△(Uab / Uac) ⩽±7.5%
Temperature Variation: 30min, 5 cycle, △R⩽±5% R,△(Uab / Uac) ⩽±5%
Climate category: △R⩽±3%R, R_1⩾100MΩ
70°C Electrical endurance: 0.5W, 1000h,△R⩽±3%R
Mechanical endurance: 200 cycles,△R⩽±10%R, CRV⩽3%R or 5Ω
Steady damp heat:△R⩽±10%R, R_1⩾100MΩ

Physical characteristics

Total mechanical travel :30±2cycles
Staring torque : ⩽35mN. m
Standard packaging: 50pcs/tube

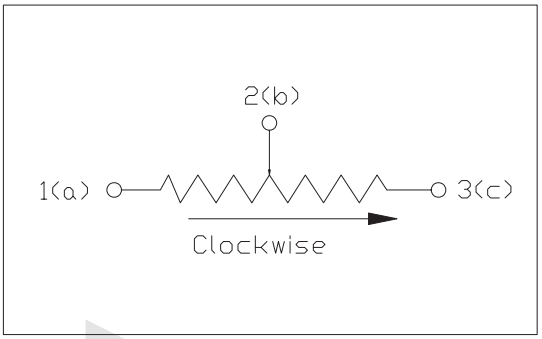

Resistance (Ω)	Code
10	100
20	200
50	500
100	101
200	201
500	501
1000	102
2000	202
10000	103
20000	203
50000	503
100000	104
200000	204
500000	504
1000000	105
2000000	205

ORDER INFORMATION

Product NO.: KLS4-3329 H-103

Pos. NO. — 3329:Model
H:Style — 103:Resistance Code

Cermet Potentiometer Series

KLS4-3329 Cermet Potentiometer Series

3329S

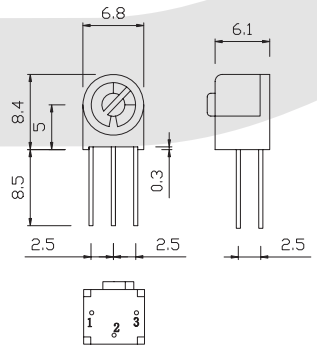

3329P

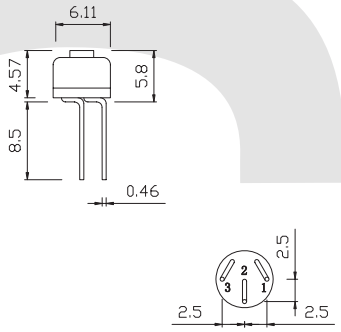

3329W

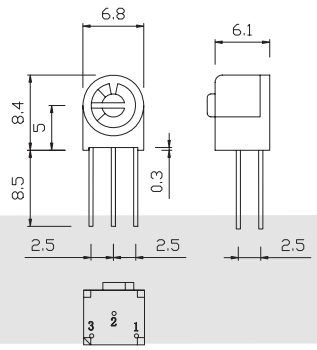

3329H

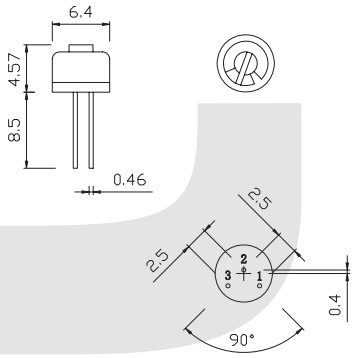

3329X

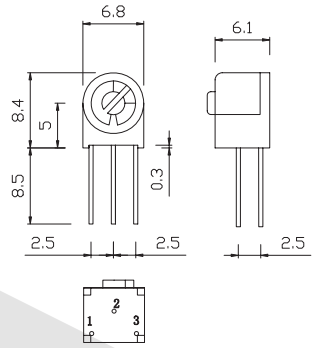

ORDER INFORMATION

Product NO.: KLS4-3329 H-103

- Pos. NO.
- 3329:Model
- H:Style
- 103:Resistance Code

Cermet Potentiometer Series

KLS4-3323 Cermet Potentiometer Series

Electrical characteristics

Standard Resistance Range:10Ω ~ 2MΩ
Resistance Tolerance: ± 10%
Terminal Resitance:≤1%R or 2Ω Max
Contact Resistance Vartion:CRV≤3%R or 3Ω Max
Insulation Resistance:R_1≥1GΩ
Withstand Voltage: 640VAC
Maximum Wiper Current: 100mA
Effective electrical travel: 30±2 runs nom



Environmental characteristics

Power Rating (300 volts max.):70 °C :0.5 W, 125 °C:0 W
Temperature Range : -55°C ~ +125°C
Temperature Coeffi cient : ±250ppm/°C , ±100ppm/°C
Vibration: 390m/s2, 4000 cycles, △R≤±5%R
Collision: 10 ~ 500Hz, 0.75mm, or 98m /s^2, 6h, △R≤±5% R,
△(Uab / Uac) ≤±7.5%
Temperature Variation: 30min, 5 cycle, △R≤±5% R,△(Uab / Uac) ≤±5%
Climate category: △R≤±3%R, R_1≥100MΩ
70°C Electrical endurance: 0.5W, 1000h,△R≤±3%R
Mechanical endurance: 200 cycles,△R≤±10%R, CRV≤3%R or 5Ω
Steady damp heat:△R≤±10%R, R_1≥100MΩ

Physical characteristics

Total mechanical travel :30±2cycles
Staring torque : ≤35mN. m
Standard packaging: 50pcs/tube

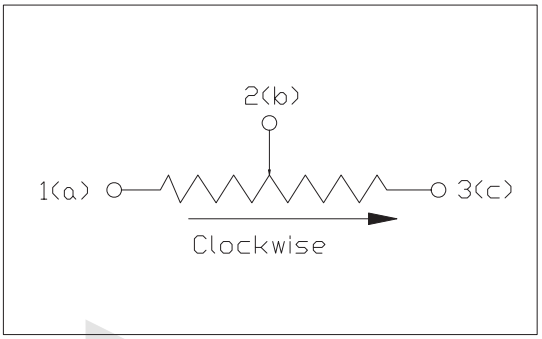

Resistance (Ω)	Code
10	100
20	200
50	500
100	101
200	201
500	501
1000	102
2000	202
10000	103
20000	203
50000	503
100000	104
200000	204
500000	504
1000000	105
2000000	205

ORDER INFORMATION

Product NO.: KLS4-3323 P-103

Pos. NO.
3323:Model
103:Resistance Code
P:Style

Cermet Potentiometer Series

KLS4-3323 Cermet Potentiometer Series

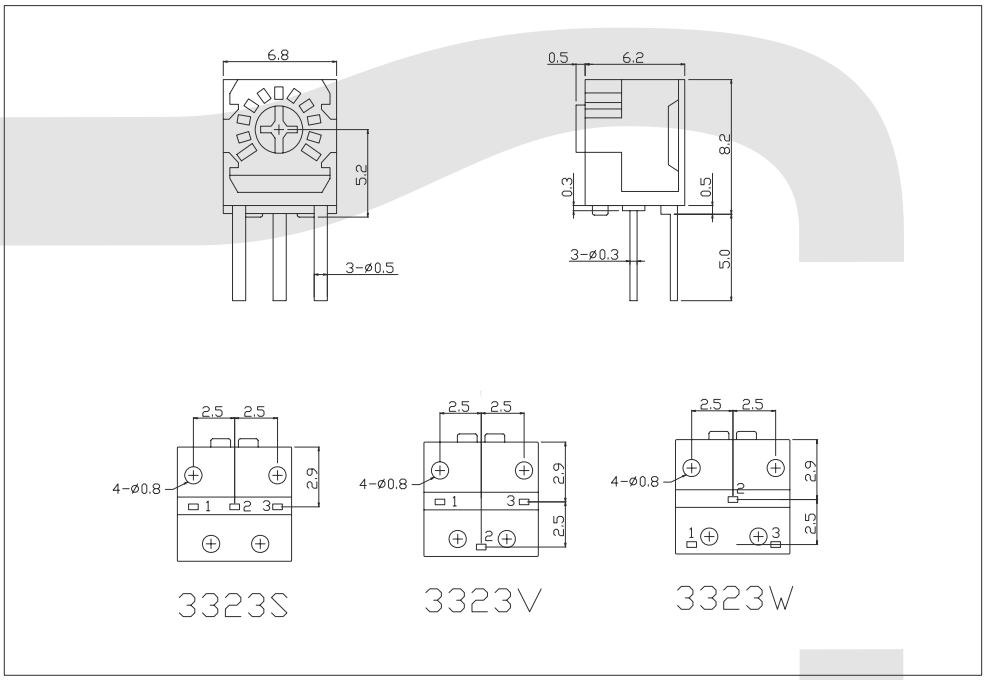

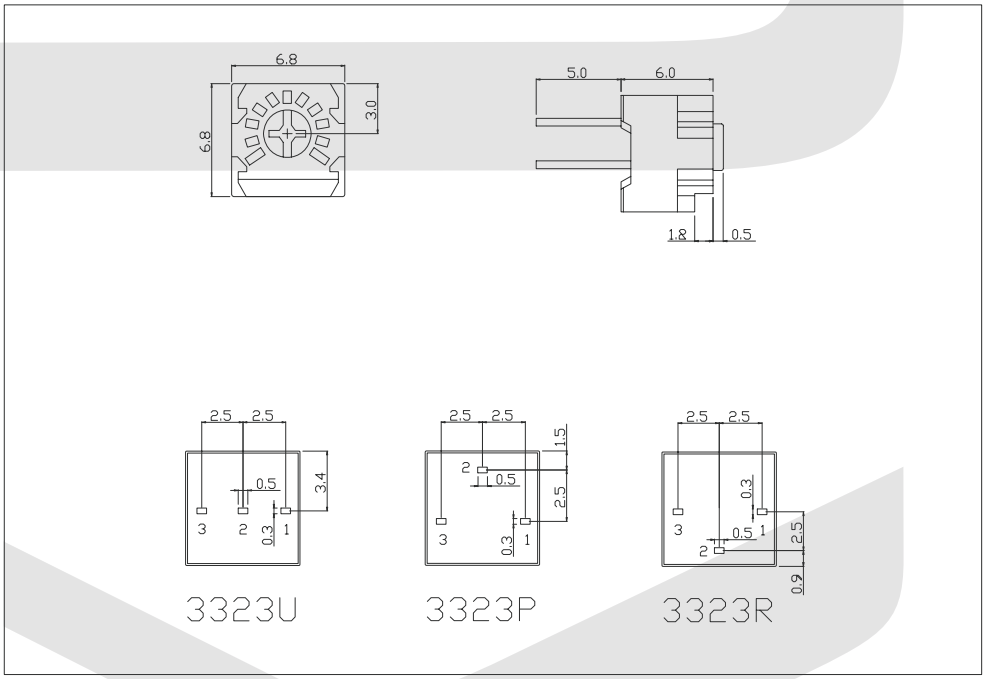

ORDER INFORMATION

Product NO.: KLS4-3323 P-103

Pos. NO.

3323:Model

103:Resistance Code

P:Style

Cermet Potentiometer Series

KLS4-3314 Cermet Potentiometer Series

Electrical characteristics

Standard Resistance Range:10Ω ~ 2MΩ
Resistance Tolerance: ± 10%
Terminal Resitance:≤1%R or 2Ω Max
Contact Resistance Vartion:CRV≤3%R or 3Ω Max
Insulation Resistance:R_1≥1GΩ
Withstand Voltage: 640VAC
Maximum Wiper Current: 100mA
Effective electrical travel: 30±2 runs nom



Environmental characteristics

Power Rating (300 volts max.):70 °C :0.5 W, 125 °C:0 W
Temperature Range : -55°C ~ +125°C
Temperature Coeffi cient : ±250ppm/°C , ±100ppm/°C
Vibration: 390m/s2, 4000 cycles, △R≤±5%R
Collision: 10 ~ 500Hz, 0.75mm, or 98m /s^2, 6h, △R≤±5% R,
△(Uab / Uac) ≤±7.5%
Temperature Variation: 30min, 5 cycle, △R≤±5% R,△(Uab / Uac) ≤±5%
Climate category: △R≤±3%R, R_1≥100MΩ
70°C Electrical endurance: 0.5W, 1000h,△R≤±3%R
Mechanical endurance: 200 cycles,△R≤±10%R, CRV≤3%R or 5Ω
Steady damp heat:△R≤±10%R, R_1≥100MΩ

Physical characteristics

Total mechanical travel :30±2cycles
Staring torque : ≤35mN. m
Standard packaging: 50pcs/tube

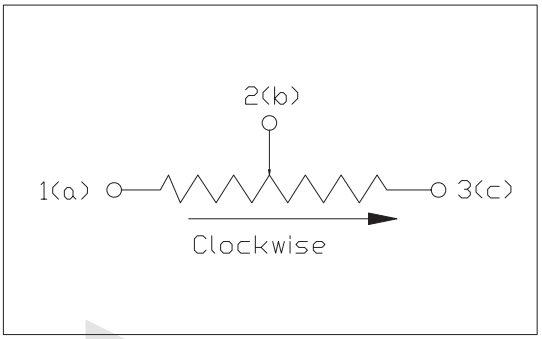

Resistance (Ω)	Code
10	100
20	200
50	500
100	101
200	201
500	501
1000	102
2000	202
10000	103
20000	203
50000	503
100000	104
200000	204
500000	504
1000000	105
2000000	205

ORDER INFORMATION

Product NO.: KLS4-3314 J -103

Pos. NO.
3314:Model
J:Style
103:Resistance Code

Cermet Potentiometer Series

KLS4-3314 Cermet Potentiometer Series

3314J

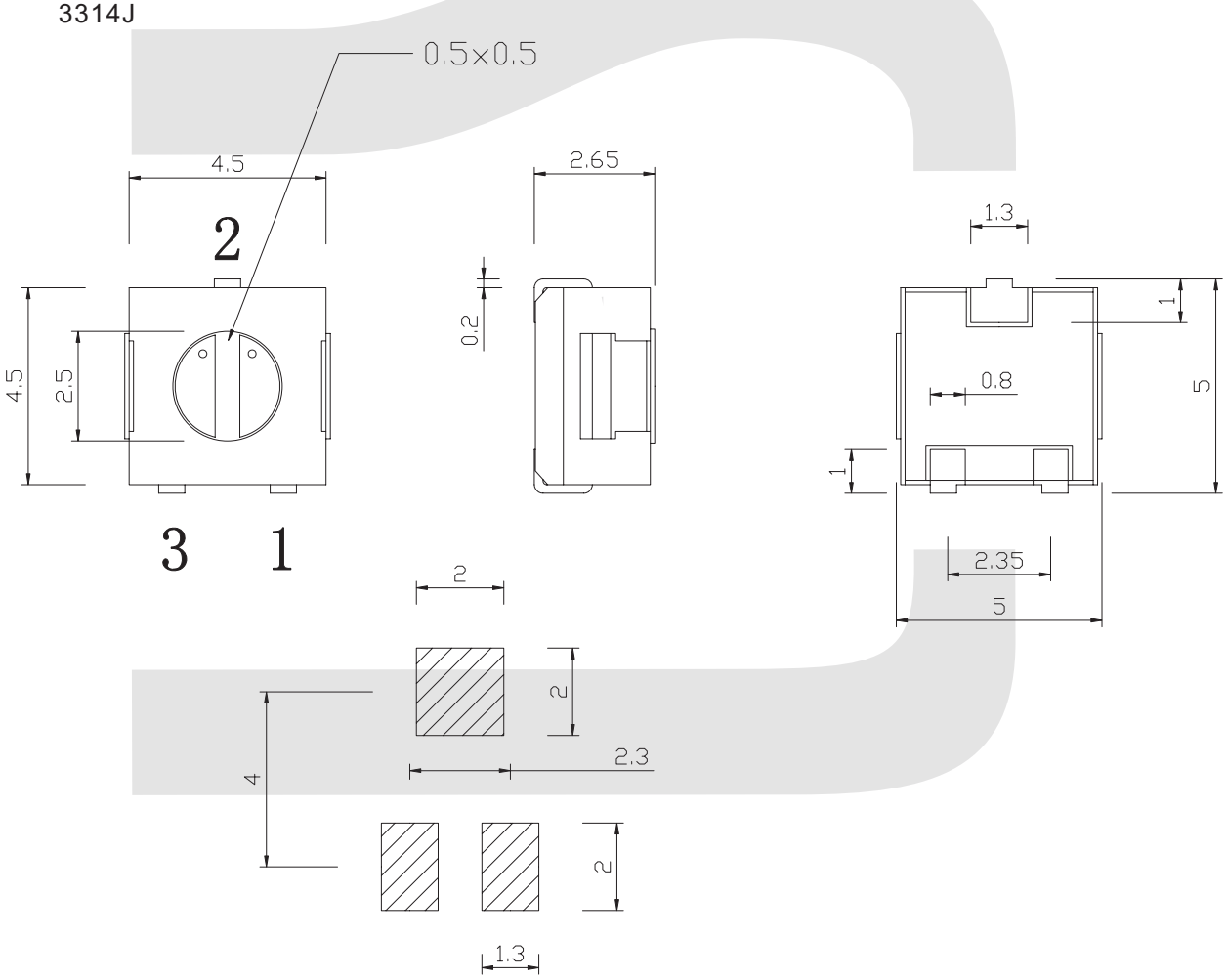

PCB Layout

ORDER INFORMATION

Product NO.: KLS4-3314 J -103

Pos. NO.
3314:Model
J:Style
103:Resistance Code

Cermet Potentiometer Series

KLS4-3314 Cermet Potentiometer Series

IV

3314G

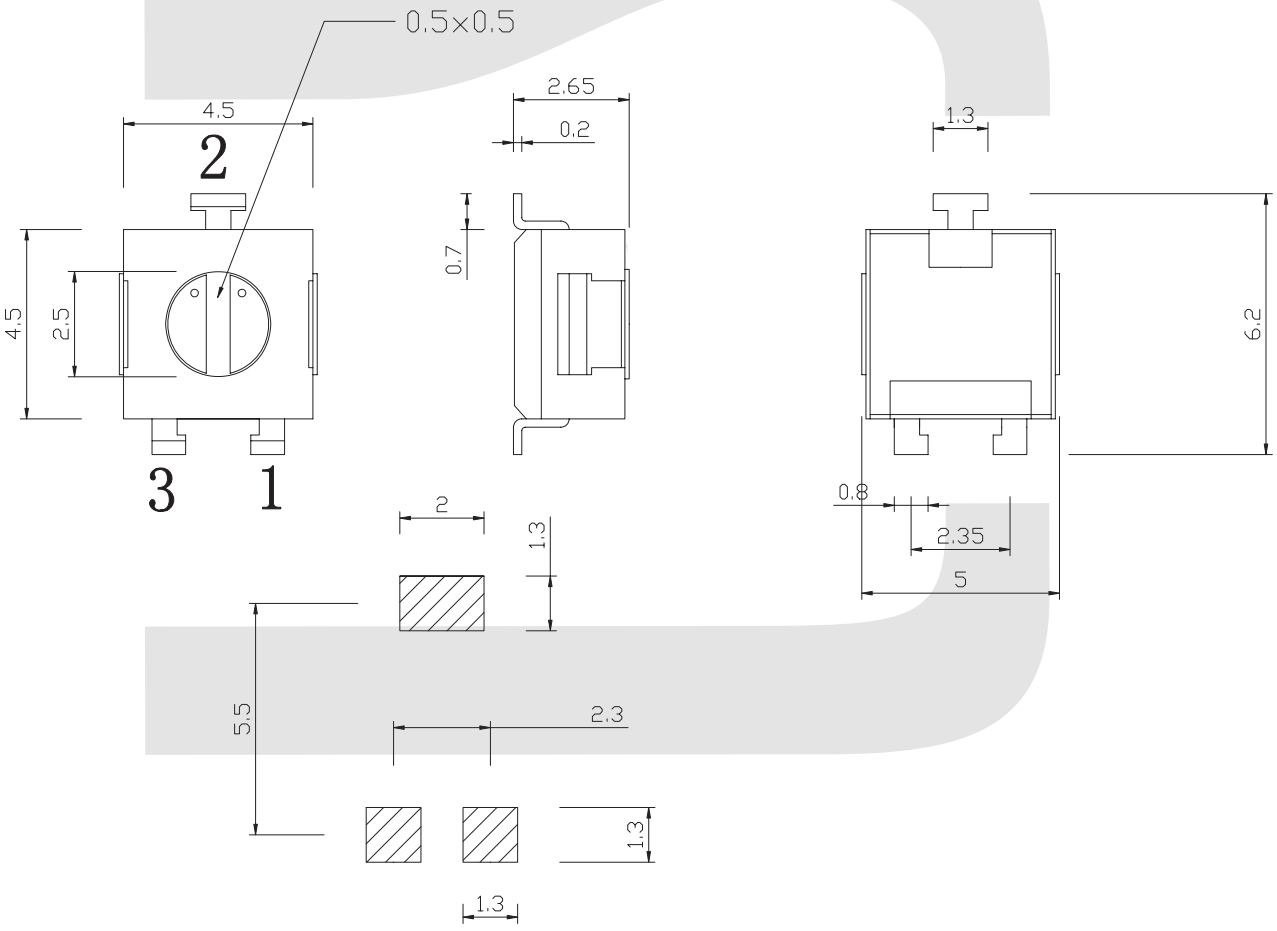

PCB Layout

ORDER INFORMATION

Product NO.: KLS4-3314 G-103

Pos. NO.
3314:Model
103:Resistance Code
G:Style

Cermet Potentiometer Series

KLS4-3269 Cermet Potentiometer Series

Electrical characteristics

Standard Resistance Range:10Ω ~ 2MΩ
Resistance Tolerance: ± 10%
Terminal Resitance:≤1%R or 2Ω Max
Contact Resistance Vartion:CRV≤3%R or 3Ω Max
Insulation Resistance:R_1≥1GΩ
Withstand Voltage: 640VAC
Maximum Wiper Current: 100mA
Effective electrical travel: 30±2 turns nom



Environmental characteristics

Power Rating (300 volts max.):70 °C :0.5 W, 125 °C:0 W
Temperature Range : -55°C ~ +125°C
Temperature Coeffi cient : ±250ppm/°C , ±100ppm/°C
Vibration: 390m/s2, 4000 cycles, △R≤±5%R
Collision: 10 ~ 500Hz, 0.75mm, or 98m /s^2, 6h, △R≤±5% R,
△(Uab / Uac) ≤±7.5%
Temperature Variation: 30min, 5 cycle, △R≤±5% R,△(Uab / Uac) ≤±5%
Climate category: △R≤±3%R, R_1≥100MΩ
70°C Electrical endurance: 0.5W, 1000h,△R≤±3%R
Mechanical endurance: 200 cycles,△R≤±10%R, CRV≤3%R or 5Ω
Steady damp heat:△R≤±10%R, R_1≥100MΩ

Physical characteristics

Total mechanical travel :30±2cycles
Staring torque : ≤35mN. m
Standard packaging: 50pcs/tube

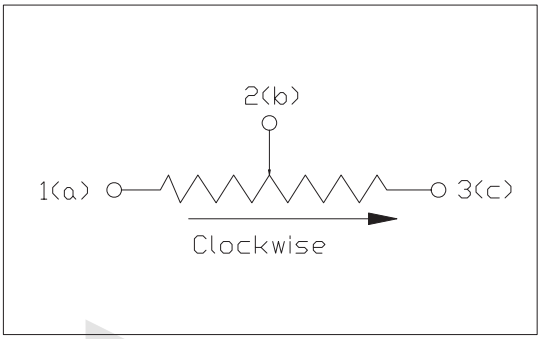

Resistance (Ω)	Code
10	100
20	200
50	500
100	101
200	201
500	501
1000	102
2000	202
10000	103
20000	203
50000	503
100000	104
200000	204
500000	504
1000000	105
2000000	205

ORDER INFORMATION

Product NO.: KLS4-3269 W-103

Pos. NO. —
3269:Model —
103:Resistance Code
W:Style

Cermet Potentiometer Series

KLS4-3269 Cermet Potentiometer Series

3269W

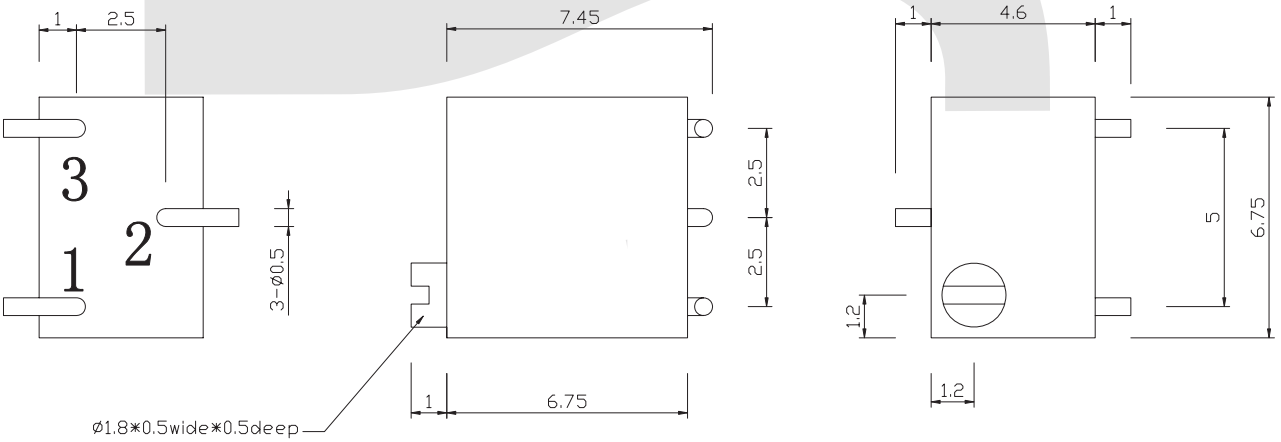

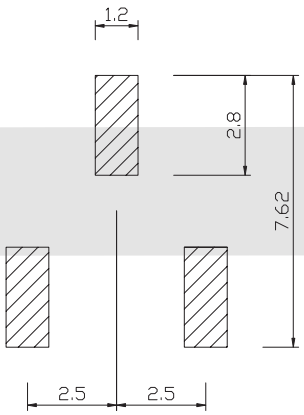

PCB Layout

ORDER INFORMATION

Product NO.: KLS4-3269 W-103

Pos. NO.
004=004 pos.
3269:Model
W:Style
103:Resistance Code

Cermet Potentiometer Series

KLS4-3269 Cermet Potentiometer Series

IV

3269P

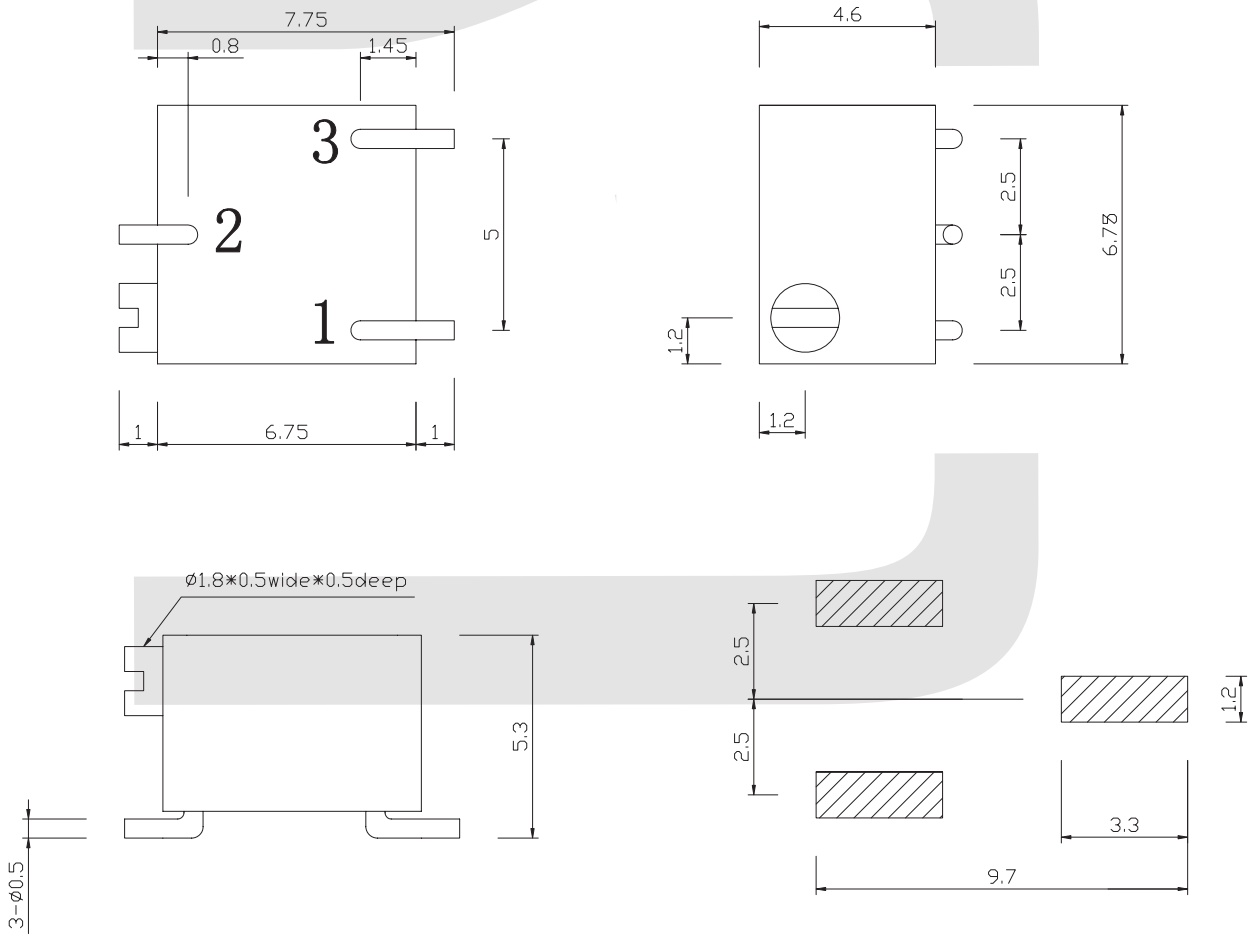

PCB Layout

ORDER INFORMATION

Product NO.: KLS4-3269 P-103

Pos. NO.

3269:Model

103:Resistance Code

P:Style

Cermet Potentiometer Series

KLS4-3269 Cermet Potentiometer Series

3269X

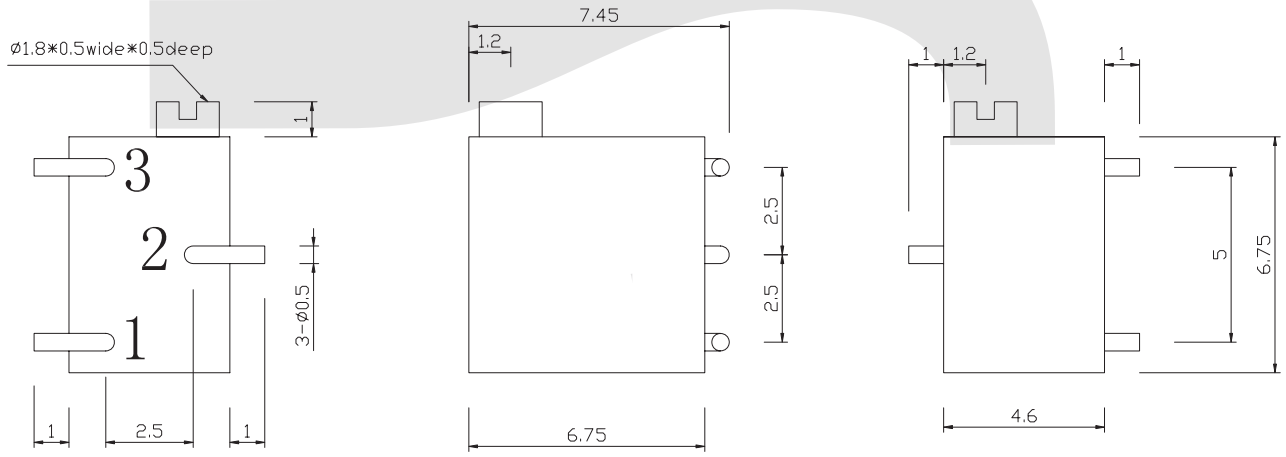

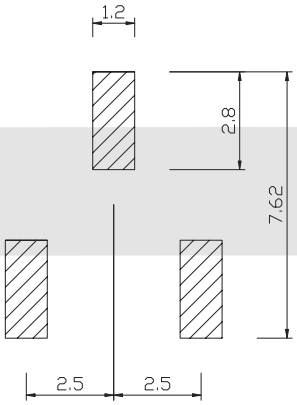

PCB Layout

ORDER INFORMATION

Product NO.: KLS4-3269 X-103

Pos. NO.

3269:Model

X:Style

103:Resistance Code

Cermet Potentiometer Series

KLS4-3296 Cermet Potentiometer Series



Electrical characteristics

Standard Resistance Range:10Ω ~ 2MΩ
Resistance Tolerance: ± 10%
Terminal Resitance:≤1%R or 2Ω Max
Contact Resistance Vartion:CRV≤3%R or 3Ω Max
Insulation Resistance:R_1≥1GΩ
Withstand Voltage: 640VAC
Maximum Wiper Current: 100mA
Effective electrical travel: 30±2 turns nom

Environmental characteristics

Power Rating (300 volts max.):70 °C :0.5 W, 125 °C:0 W
Temperature Range : -55°C ~ +125°C
Temperature Coeffi cient : ±250ppm/°C , ±100ppm/°C
Vibration: 390m/s2, 4000 cycles, △R≤±5%R
Collision: 10 ~ 500Hz, 0.75mm, or 98m /s^2, 6h, △R≤±5% R,
△(Uab / Uac) ≤±7.5%
Temperature Variation: 30min, 5 cycle, △R≤±5% R,△(Uab / Uac) ≤±5%
Climate category: △R≤±3%R, R_1≥100MΩ
70°C Electrical endurance: 0.5W, 1000h,△R≤±3%R
Mechanical endurance: 200 cycles,△R≤±10%R, CRV≤3%R or 5Ω
Steady damp heat:△R≤±10%R, R_1≥100MΩ

Physical characteristics

Total mechanical travel :30±2cycles
Staring torque : ≤35mN. m
Standard packaging: 50pcs/tube

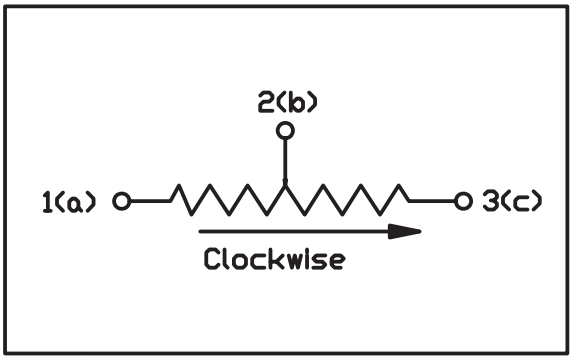

Resistance (Ω)	Code
10	100
20	200
50	500
100	101
200	201
500	501
1000	102
2000	202
10000	103
20000	203
50000	503
100000	104
200000	204
500000	504
1000000	105
2000000	205

ORDER INFORMATION

Product NO.: KLS4-3296 W-103

Pos. NO. — 3296:Model — W:Style — 103:Resistance Code

Cermet Potentiometer Series

KLS4-3296 Cermet Potentiometer Series

3296W

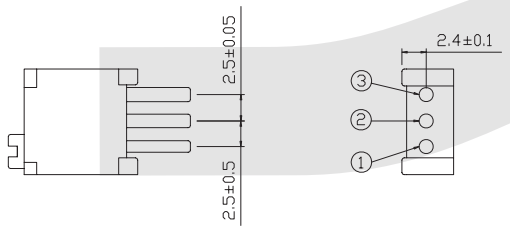

3296Z

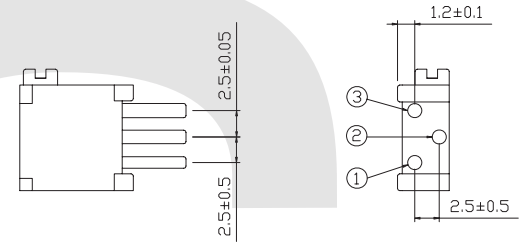

3296X

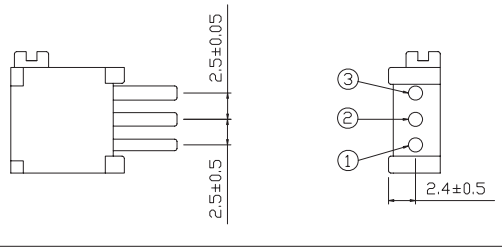

3296Y

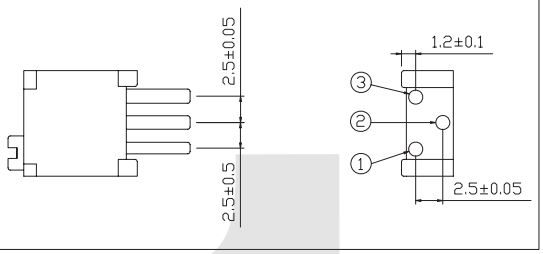

3296P

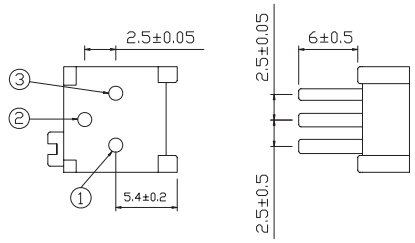

3296A

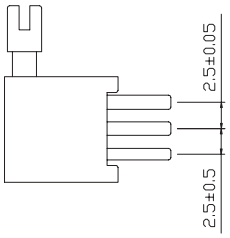

3296W-B

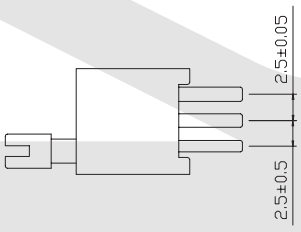

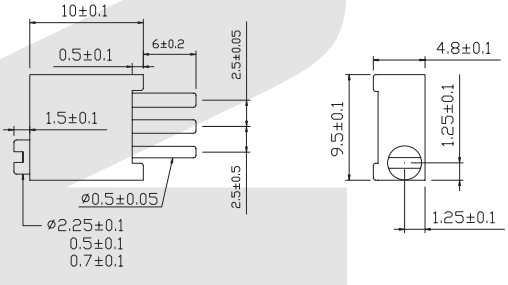

Cermet Potentiometer Series

KLS4-3386 Cermet Potentiometer Series



Electrical characteristics

Standard Resistance Range:10Ω ~ 2MΩ
Resistance Tolerance: ± 10%
Terminal Resitance:⩽1%R or 2Ω Max
Contact Resistance Vartion:CRV⩽3%R or 3Ω Max
Insulation Resistance:R_1⩾1GΩ
Withstand Voltage: 640VAC
Maximum Wiper Current: 100mA
Effective electrical travel: 30±2 turns nom

Environmental characteristics

Power Rating (300 volts max.):70 °C :0.5 W, 125 °C:0 W
Temperature Range : -55°C ~ +125°C
Temperature Coeffi cient : ±250ppm/°C , ±100ppm/°C
Vibration: 390m/s2, 4000 cycles, △R⩽±5%R
Collision: 10 ~ 500Hz, 0.75mm, or 98m /s^2, 6h, △R⩽±5% R,
△(Uab / Uac) ⩽±7.5%
Temperature Variation: 30min, 5 cycle, △R⩽±5% R,△(Uab / Uac) ⩽±5%
Climate category: △R⩽±3%R, R_1⩾100MΩ
70°C Electrical endurance: 0.5W, 1000h,△R⩽±3%R
Mechanical endurance: 200 cycles,△R⩽±10%R, CRV⩽3%R or 5Ω
Steady damp heat:△R⩽±10%R, R_1⩾100MΩ

Physical characteristics

Total mechanical travel :30±2cycles
Staring torque : ⩽35mN. m
Standard packaging: 50pcs/tube

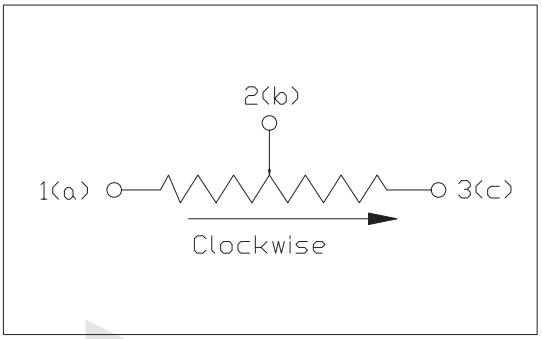

Resistance (Ω)	Code
10	100
20	200
50	500
100	101
200	201
500	501
1000	102
2000	202
10000	103
20000	203
50000	503
100000	104
200000	204
500000	504
1000000	105
2000000	205

ORDER INFORMATION

Product NO.: KLS4-3386 P-103

Pos. NO. — 3386:Model
103:Resistance Code — P:Style

Cermet Potentiometer Series

KLS4-3386 Cermet Potentiometer Series

3386P

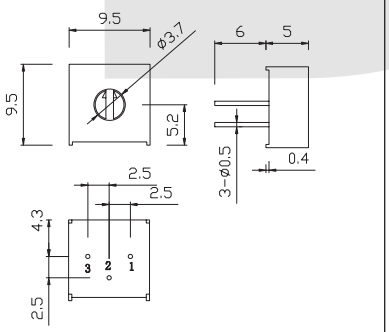

3386H

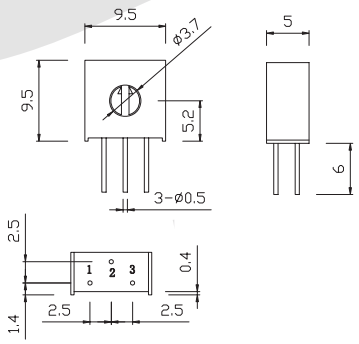

3386X

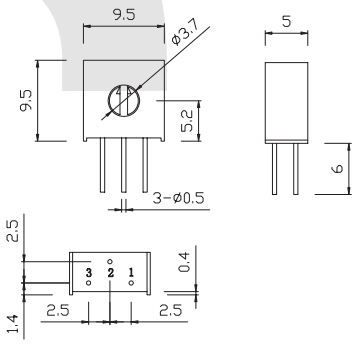

3386F

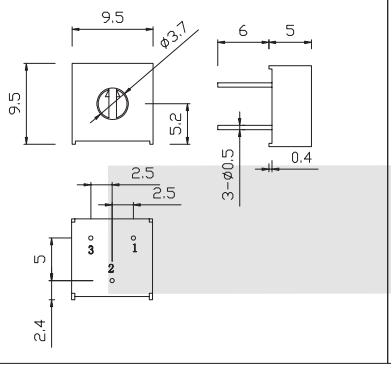

3386W

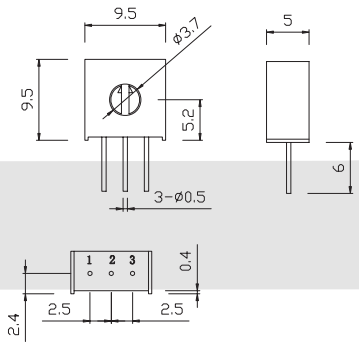

3386S

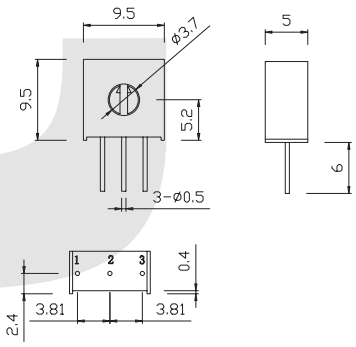

ORDER INFORMATION

Product NO.: KLS4-3386 P-103

- Pos. NO.
- 3386:Model
- 103:Resistance Code
- P:Style

Cermet Potentiometer Series

KLS4-3386 Cermet Potentiometer Series

3386J

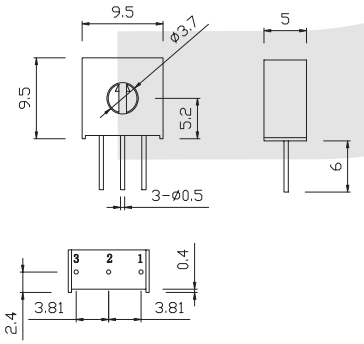

3386K

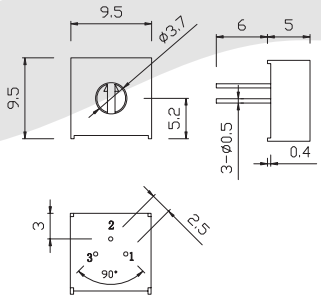

3386Y

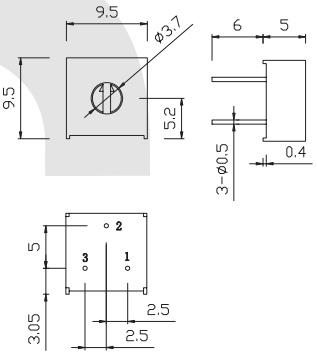

3386M

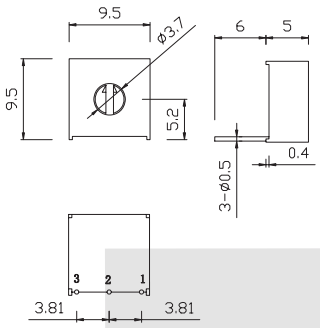

3386C

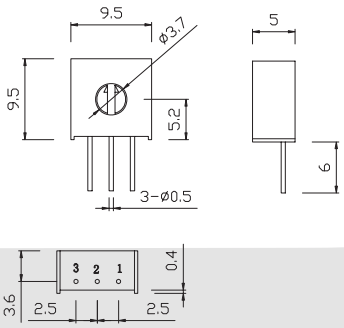

3386R

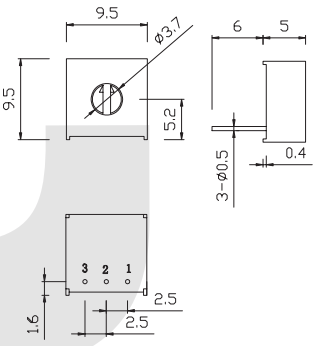

3386P-EY5

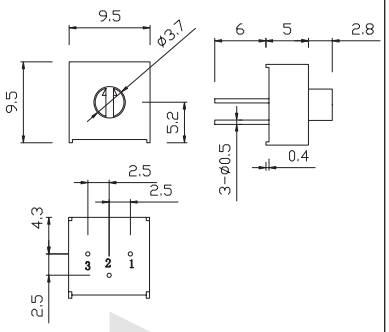

3386H-EY5

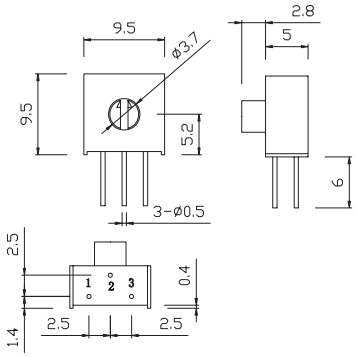

3386X-EY5

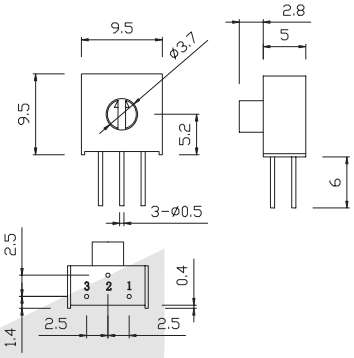

ORDER INFORMATION

Product NO.: KLS4-3386 P-103

- Pos. NO.
- 3386:Model
- 103:Resistance Code
- P:Style

Trimmer Potentiometer

KLS4-PT6 Series

FEATURES

Carbon resistive element.
Dust proof enclosure.
Polyester substrate.
Also upon request:
- ∗Wiper positioned at 50% or fully clockwise
- ∗Supplied in magazines for automatic insertion
- ∗Long life model PT-6...E (10,000 cycles)
- ∗Without crimping model. PT-6...SC
- ∗Housing available in self extinguishable plastic（UL 94V-0）



KLS electronic

MECHANICAL SPECIFICATIONS

Mechanical Rotation angle:	235°±5°
Electrical Rotation angle:	200°±20°
Torque:	0.2 to 2 Ncm.(0.3 to 2.7 in-oz)
Stop torque:	> 4 Ncm. (> 5.6 in-oz)
Mechanical life:	Standard 500 cycles
	Long life 10000cycles

ELECTRICAL SPECIFICATIONS

Range of value:	220Ω≤Rn≤5MΩ
	(Decad.1.0-2.0-2.2-2.5-4.7-5.0)
Tolerance:	220Ω≤Rn≤1MΩ ±20% ;
	1MΩ≤Rn≤5MΩ ±30%
Max.voltage:	30 VDC(lin) 50VDC(no lin)
Rated Power:	0.03W(lin) 0.015W(no lin)
Taper:	lin;log;alog
Residual resistance:	≤5‰ Rn(3Ω min)
Equivalent noise resistance:	≤3% Rn(3Ω min)
Operating temperature:	-25℃~+70℃

Rotors

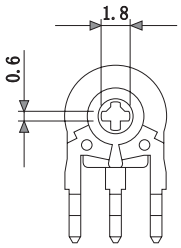

K- Cross slot thru hole

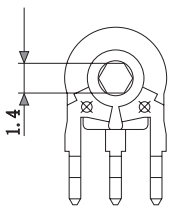

M- Hexagonal thru hole

ORDER INFORMATION

Product No.: KLS4-PT6 -M-V 221-A-2020

- Pos. No.
- Trimmer potentiometer Series
- Rotors: K- Cross slot thru hole / M- Hexagonal thru hole
- Mounting method: V-Vertical Mount / H-Horizontal Adjust
- Value: 221- 220Ω
- Taper: A-Lin. B-Log. C-Alog.
- Tolerance: 2020-±20% 3030-±30%

Trimmer Potentiometer

KLS4-PT6 Series

Mounting Methods

V = Horizontal mount / Vertical adjust

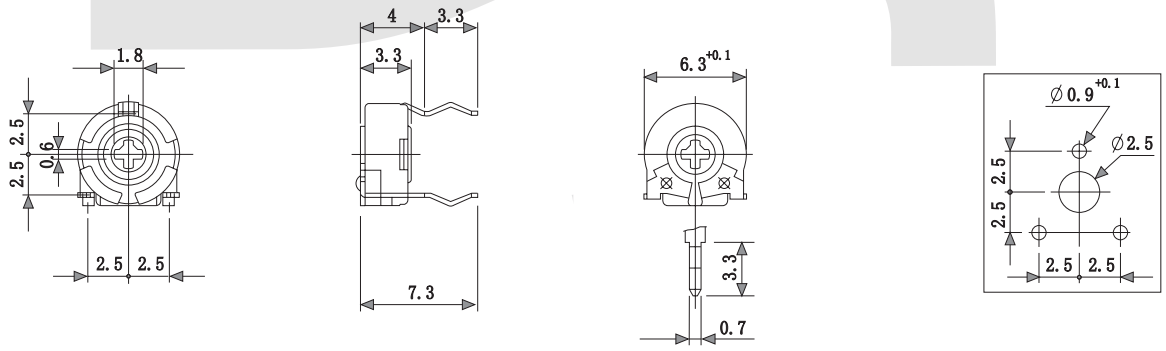

H = Vertical mount / Horizontal adjust

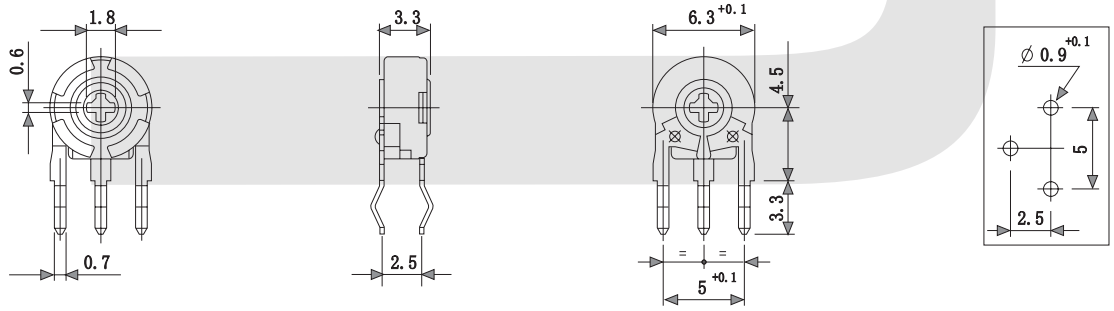

ORDER INFORMATION

Product No.: KLS4-PT6 -M-V 221-A-2020

- Pos. No.
- Trimmer potentiometer Series
- Rotors: K- Cross slot thru hole; M- Hexagonal thru hole
- Mounting method: V-Vertical Mount; H-Horizontal Adjust
- Value: 221- 220Ω
- Taper: A-Lin. B-Log. C-Alog.
- Tolerance: 2020-±20% 3030-±30%

Trimmer Potentiometer

KLS4-PT10 Series

FEATURES

Carbon resistive element.
Dust proof enclosure.
Polyester substrate.
Also upon request:
- ∗Wiper positioned at 50% or fully clockwise
- ∗Supplied in magazines for automatic insertion
- ∗Long life model for low cost control potentiometer applications
- ∗Self extinguishable plastic UL 94V-0
- ∗Cut track option
- ∗Special tapers
- ∗Mechanical detents
- ∗Low & extra low torque versions
- ∗Special switch option
- ∗3% Linearity and 100K cycles mechanical life



MECHANICAL SPECIFICATIONS

Mechanical Rotation angle:	235°±5°
Electrical Rotation angle:	220°±20°
Torque:	0.4 to 2 Ncm.(0.6 to 2.7 in-oz)
Stop torque:	> 5 Ncm. (> 7 in-oz)
Life:	10000cycles

ELECTRICAL SPECIFICATIONS

Range of value:	100Ω≤Rn≤5MΩ (Decad.1.0-2.0-2.2-2.5-4.7-5.0)
Tolerance:	100Ω≤Rn≤1MΩ ±20% ; 1MΩ≤Rn≤5MΩ ±30%
Max.voltage:	40 VDC(lin) 20VDC(no lin)
Rated Power:	0.04W(lin) 0.02W(no lin)
Taper:	lin;log;alog
Residual resistance:	≤5‰ Rn(3Ω min)
Equivalent noise resistance:	≤3% Rn(3Ω min)
Operating temperature:	-25°C~+70°C

Rotors

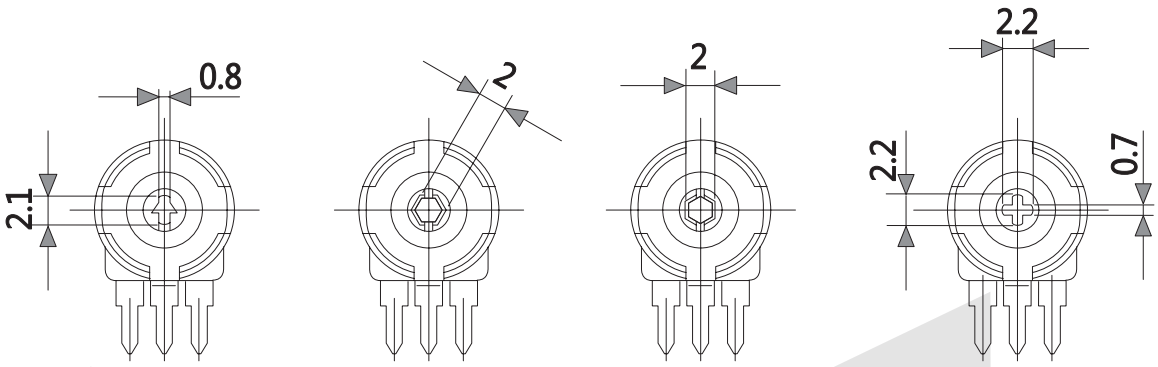

L - Screwdriver thru hole M - Hexagonal thru hole G - Hexagonal thru hole K - Cross slot thru hole

ORDER INFORMATION

Product No.: KLS4-PT10-M-V 221-A-2020

Pos. No.
Trimmer potentiometer Series
Rotors: L - Screwdriver thru hole
K - Cross slot thru hole
M - Hexagonal thru hole
G - Hexagonal thru hole
Tolerance: 2020-±20% 3030-±30%
Taper: A-Lin. B-Log. C-Alog.
Value: 221- 220Ω
Mounting method: V10 -Vertical Mount
H2.5 -Horizontal Adjust
H5 -Horizontal Adjust

Trimmer Potentiometer

KLS4-PT10 Series

Mounting Methods

V10 = Horizontal mount / Vertical adjust

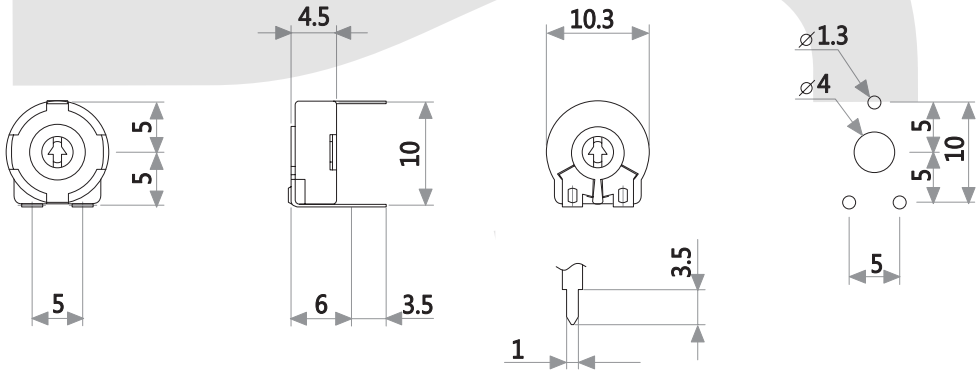

H2.5 = Vertical mount / Horizontal adjust

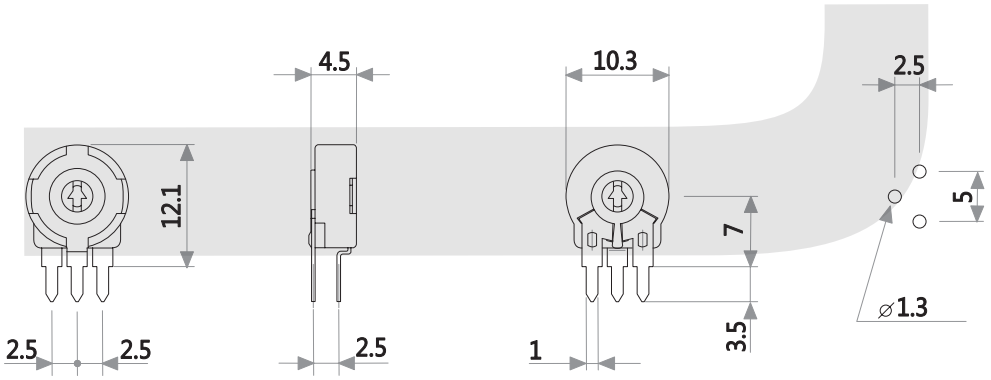

H5 = Vertical mount / Horizontal adjust

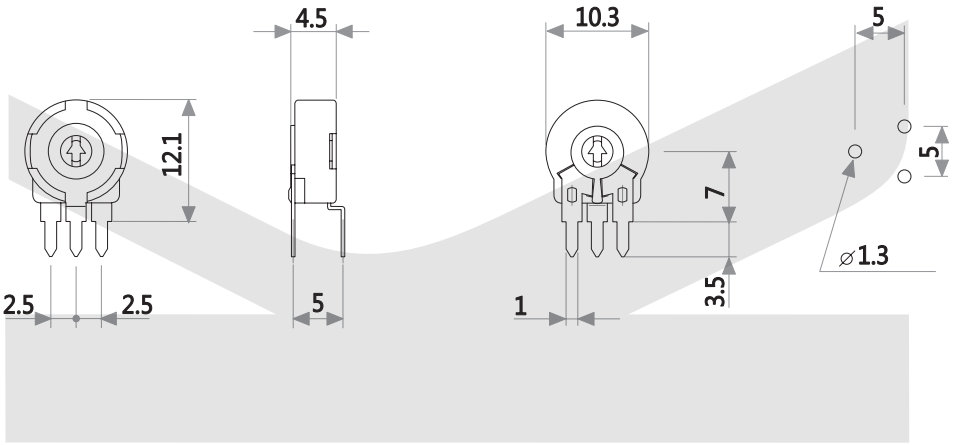

Trimmer Potentiometer

KLS4-PT15 Series

FEATURES

Carbon resistive element.
Dust proof enclosure.
Polyester substrate.
Also upon request:
- ∗Wiper positioned at 50% or fully clockwise
- ∗Long life model for low cost control pot. Applications.
- ∗Low torque option
- ∗Supplied in magazines for automatic insertion.
- ∗Self extinguishable plastic UL 94V-0
- ∗Cut track option
- ∗Special Tapers
- ∗Mechanical detents



MECHANICAL SPECIFICATIONS

Mechanical Rotation angle:	265°±5°
Electrical Rotation angle:	250°±20°
Torque:	0.5 to 2.5 Ncm.(0.7 to 3.4 in-oz)
Stop torque:	> 10 Ncm. (> 14 in-oz)
Life:	10000cycles

ELECTRICAL SPECIFICATIONS

Range of value:	100Ω≤Rn≤5MΩ (Decad.1.0-2.0-2.2-2.5-4.7-5.0)
Tolerance:	100Ω≤Rn≤1MΩ ±20% ; 1MΩ≤Rn≤5MΩ ±30%
Max.voltage:	50 VDC(lin) 25VDC(no lin)
Rated Power:	0.05W(lin) 0.025W(no lin)
Taper:	lin;log;alog
Residual resistance:	≤5‰ Rn(3Ω min)
Equivalent noise resistance:	≤3% Rn(3Ω min)
Operating temperature:	-25°C~+70°C

Rotors

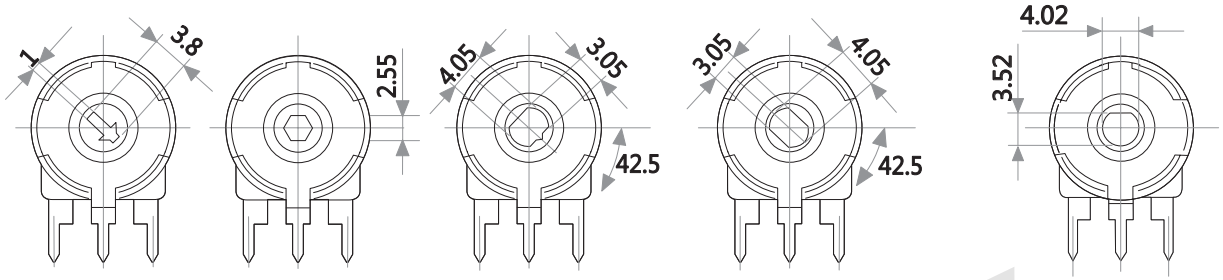

L - Screw driver thru hole

M - Hexagonal thru hole

N - Removable shaft or thumbwheel

G - Removable shaft or thumbwheel

R - Rotor R

ORDER INFORMATION

Product No.: KLS4-PT15-M-V 221-A-2020

Pos. No.

Trimmer potentiometer Series

Rotors: L - Screwdriver thru hole
M - Hexagonal thru hole
N - Removable shaft or thumbwheel
G - Removable shaft or thumbwheel
R - Rotor R

Tolerance: 2020-±20% 3030-±30%

Taper: A-Lin. B-Log. C-Alog.

Value: 221- 220Ω

Mounting method: V12.5 and H2.5 Va12.5 H5 V15 B Hc5

Trimmer Potentiometer

KLS4-PT15 Series

Mounting Methods

H = Vertical mount / Horizontal adjust

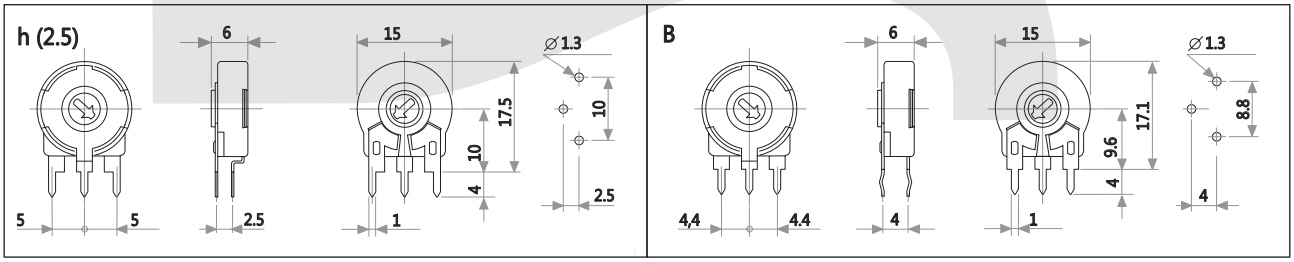

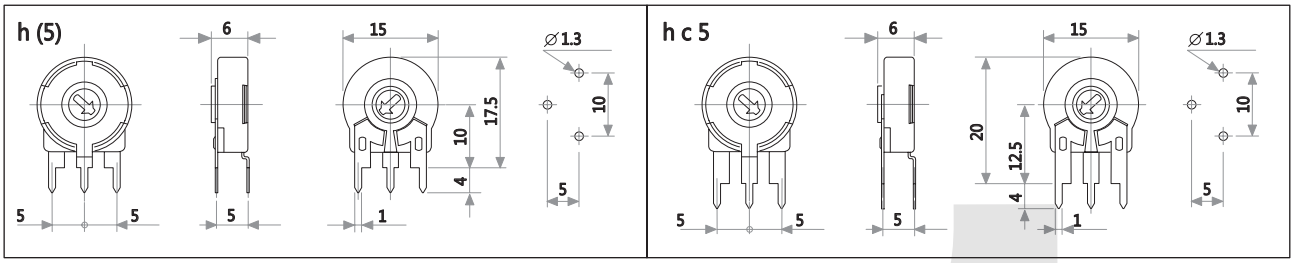

V = Horizontal mount / Vertical adjust

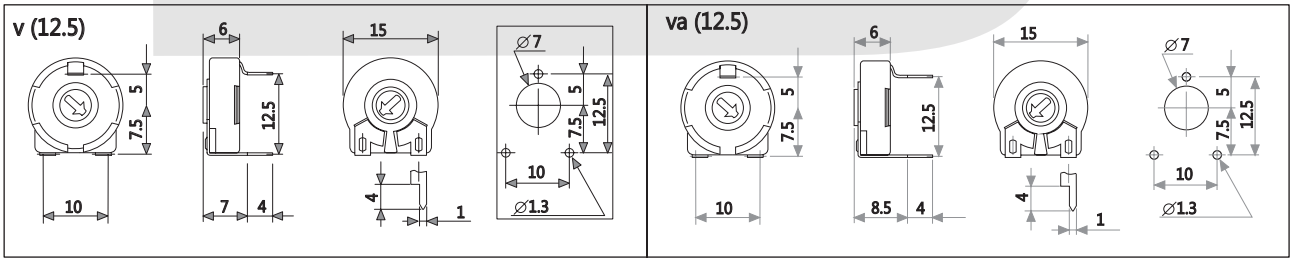

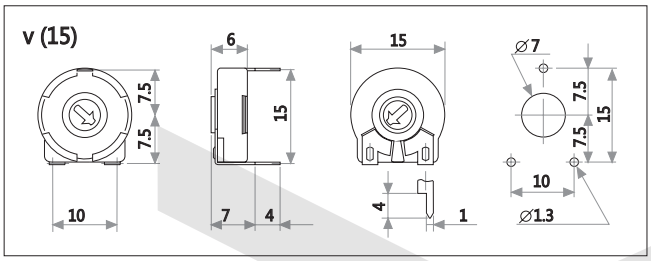

Trimmer Potentiometer

KLS4-WH06-1D Series

FEATURES

This specification applies to the variable resistors for electronic equipment Polyester substrate.

- ∗Long life model for low cost control pot applications
- ∗Since a variety of types are available,they can be used for a wide range of products
- ∗Special tapers
- ∗Low torque option



MECHANICAL SPECIFICATIONS

rotation angle: 210 ° ± 10 °
rotation torque :2-35mN. M

ELECTRICAL SPECIFICATIONS

Range of nominal resistance: 1000Ω-2MΩ
Resistance taper: B
Resistance tolerance: ± 20%
Rotational noise: 5% R
Residual resistance: R <1Kohm, Max 20ohm, R ⩾1Kohm, Max 2% R
Rated power: 0.1 W
Max. Operating voltage: DC50V
Mechanical endurance: 100 cycles
Operating temperature: -25℃~+70℃

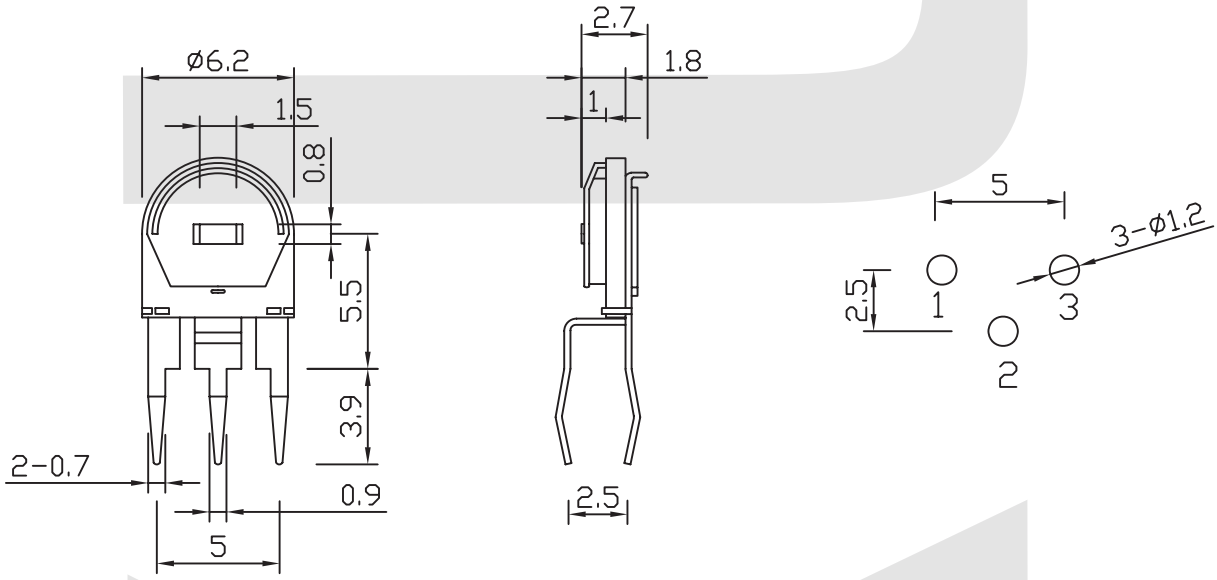

ORDER INFORMATION

Product No.: KLS4-WH06-1D-103

Pos. No.
6mm Trimmer potentiometer Series
Value: 103- 10000Ω

Trimmer Potentiometer

KLS4-WH06-2A Series

FEATURES

This specification applies to the variable resistors for electronic equipment Polyester substrate.

- ∗Long life model for low cost control pot applications
- ∗Since a variety of types are available,they can be used for a wide range of products
- ∗Special tapers
- ∗Low torque option



MECHANICAL SPECIFICATIONS

rotation angle: 210 ° ± 10 °
rotation torque :2-35mN. M

ELECTRICAL SPECIFICATIONS

Range of nominal resistance: 1000Ω-2MΩ
Resistance taper: B
Resistance tolerance: ± 20%
Rotational noise: 5% R
Residual resistance: R <1Kohm, Max 20ohm, R ⩾1Kohm, Max 2% R
Rated power: 0.1 W
Max. Operating voltage: DC50V
Mechanical endurance: 100 cycles
Operating temperature: -25℃~+70℃

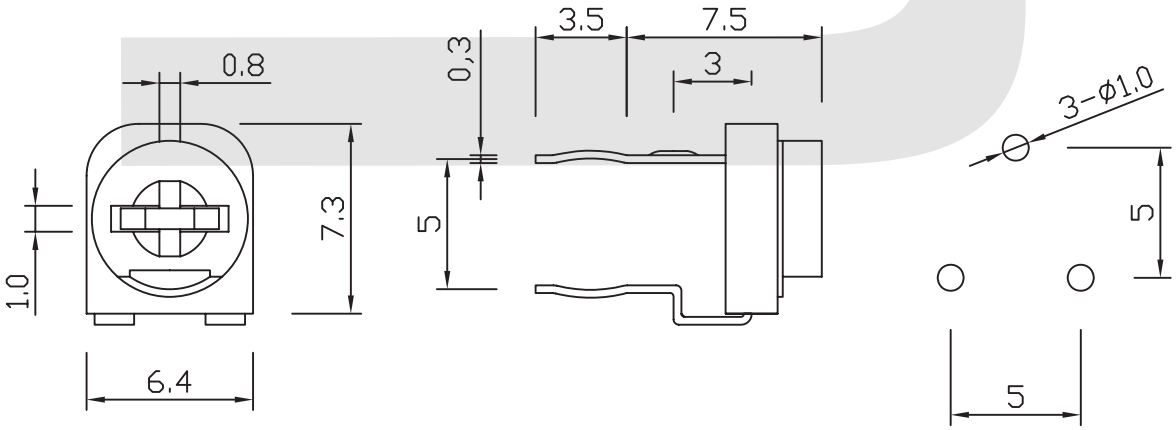

ORDER INFORMATION

Product No.: KLS4-WH06-2A-103

- Pos. No.
- 6mm Trimmer potentiometer Series
- Value: 103- 10000Ω

Trimmer Potentiometer

KLS4-WH06-1A Series

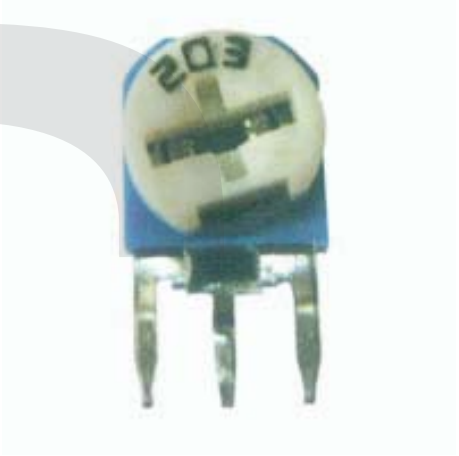

FEATURES

This specification applies to the variable resistors for electronic equipment Polyester substrate.

- ∗Long life model for low cost control pot applications
- ∗Since a variety of types are available,they can be used for a wide range of products
- ∗Special tapers
- ∗Low torque option

MECHANICAL SPECIFICATIONS

rotation angle: 210 ° ± 10 °
rotation torque :2-35mN. M

ELECTRICAL SPECIFICATIONS

Range of nominal resistance: 1000Ω-2MΩ
Resistance taper: B
Resistance tolerance: ± 20%
Rotational noise: 5% R
Residual resistance: R <1Kohm, Max 20ohm, R ⩾1Kohm, Max 2% R
Rated power: 0.1 W
Max. Operating voltage: DC50V
Mechanical endurance: 100 cycles
Operating temperature: -25℃~+70℃

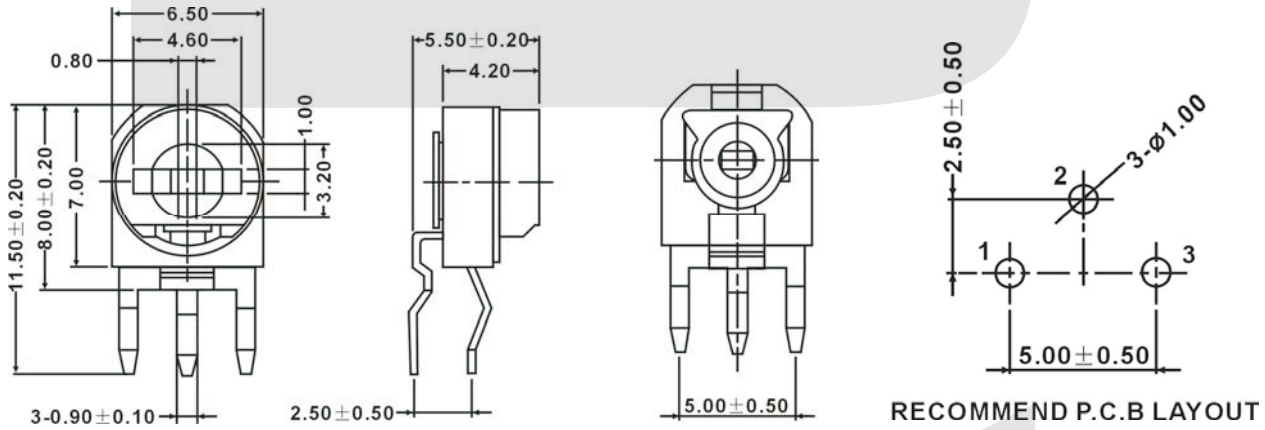

RECOMMEND P.C.B LAYOUT

ORDER INFORMATION

Product No.: KLS4-WH06-1A-103

- Pos. No.
- 6mm Trimmer potentiometer Series
- Value: 103- 10000Ω

Trimmer Potentiometer

KLS4-WH06-2D Series

FEATURES

This specification applies to the variable resistors for electronic equipment Polyester substrate.

- ∗Long life model for low cost control pot applications
- ∗Since a variety of types are available,they can be used for a wide range of products
- ∗Special tapers
- ∗Low torque option



MECHANICAL SPECIFICATIONS

rotation angle: 210 ° ± 10 °
rotation torque :2-35mN. M

ELECTRICAL SPECIFICATIONS

Range of nominal resistance: 1000Ω-2MΩ
Resistance taper: B
Resistance tolerance: ± 20%
Rotational noise: 5% R
Residual resistance: R <1Kohm, Max 20ohm, R ⩾1Kohm, Max 2% R
Rated power: 0.1 W
Max. Operating voltage: DC50V
Mechanical endurance: 100 cycles
Operating temperature: -25℃~+70℃

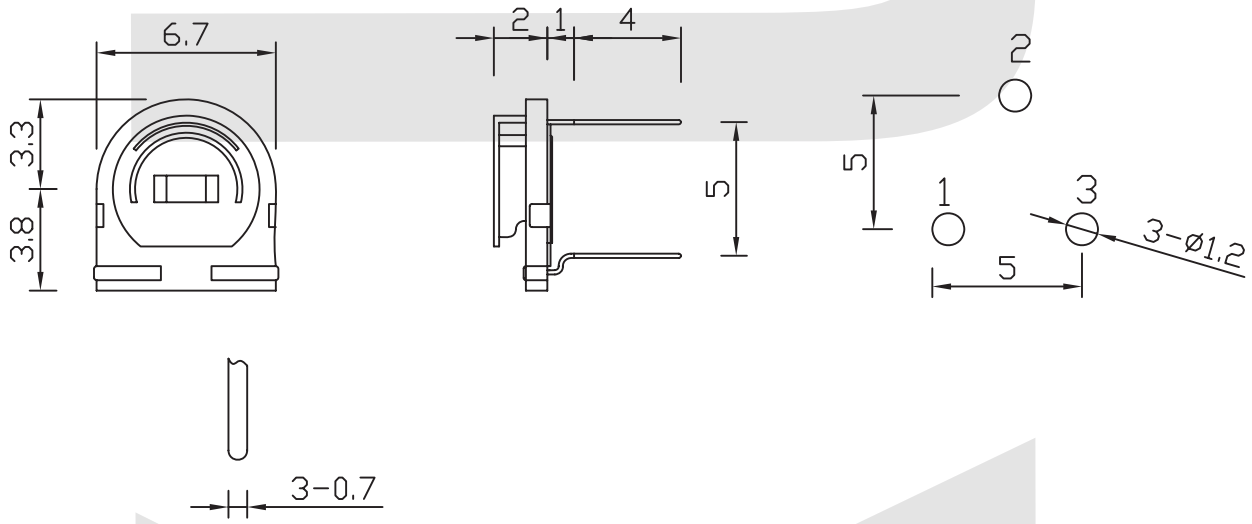

ORDER INFORMATION

Product No.: KLS4-WH06-2D-103

Pos. No.
6mm Trimmer potentiometer Series
Value: 103- 10000Ω

Trimmer Potentiometer

KLS4-WH0812 Series

FEATURES

This specification applies to the variable resistors for electronic equipment Polyester substrate.

- ∗Long life model for low cost control pot applications
- ∗Since a variety of types are available,they can be used for a wide range of products
- ∗Special tapers
- ∗Low torque option



MECHANICAL SPECIFICATIONS

rotation angle: 260 ° ± 10 °
rotation torque :4-35mN. M

ELECTRICAL SPECIFICATIONS

Range of nominal resistance: 1000Ω-2MΩ
Resistance taper: B
Resistance tolerance: ± 20%
Rotational noise: 5% R
Residual resistance: R <1Kohm, Max 20ohm, R ⩾1Kohm, Max 2% R
Rated power: 0.0125 W
Max. Operating voltage: DC50V
Mechanical endurance: 500 cycles
Operating temperature: -25℃~+70℃

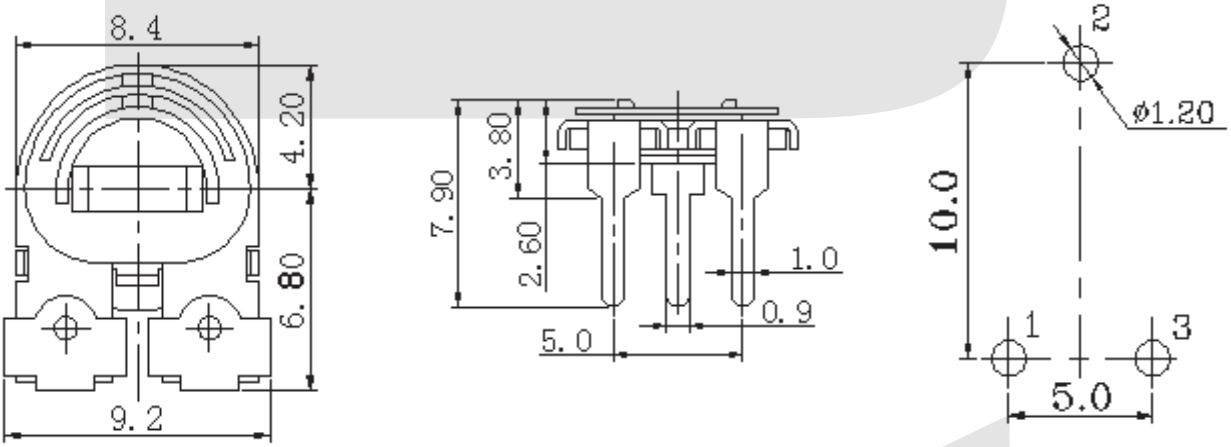

ORDER INFORMATION

Product No.: KLS4-WH0812 -103

Pos. No.
8mm Trimmer potentiometer Series
Value: 103- 10000Ω

Trimmer Potentiometer

KLS4-WH0811 Series

FEATURES

This specification applies to the variable resistors for electronic equipment Polyester substrate.

- ∗Long life model for low cost control pot applications
- ∗Since a variety of types are available,they can be used for a wide range of products
- ∗Special tapers
- ∗Low torque option

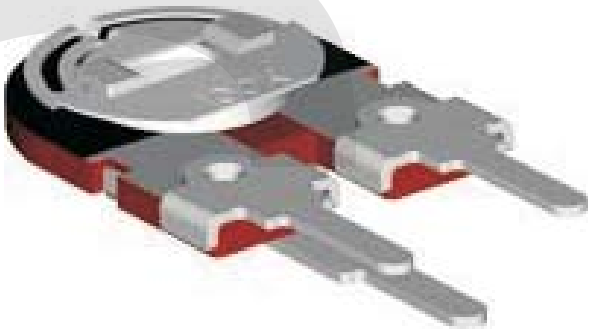

MECHANICAL SPECIFICATIONS

rotation angle: 260 ° ± 10 °
rotation torque :4-35mN. M

ELECTRICAL SPECIFICATIONS

Range of nominal resistance: 1000Ω-2MΩ
Resistance taper: B
Resistance tolerance: ± 20%
Rotational noise: 5% R
Residual resistance: R <1Kohm, Max 20ohm, R ⩾1Kohm, Max 2% R
Rated power: 0.0125 W
Max. Operating voltage: DC50V
Mechanical endurance: 500 cycles
Operating temperature: -25℃~+70℃

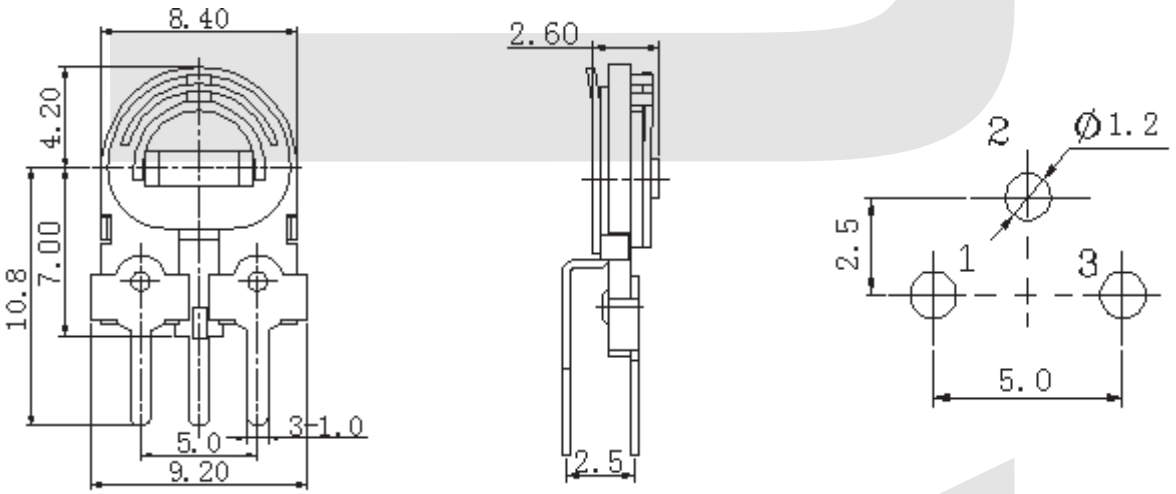

ORDER INFORMATION

Product No.: KLS4-WH0811 -103

Pos. No.
8mm Trimmer potentiometer Series
Value: 103- 10000Ω

Trimmer Potentiometer

KLS4-WI0812 Series

FEATURES

This specification applies to the variable resistors for electronic equipment Polyester substrate.

- ∗Long life model for low cost control pot applications
- ∗Since a variety of types are available,they can be used for a wide range of products
- ∗Special tapers
- ∗Low torque option



MECHANICAL SPECIFICATIONS

rotation angle: 260 ° ± 10 °
rotation torque :4-35mN. M

ELECTRICAL SPECIFICATIONS

Range of nominal resistance: 1000Ω-2MΩ
Resistance taper: B
Resistance tolerance: ± 20%
Rotational noise: 5% R
Residual resistance: R <1Kohm, Max 20ohm, R ⩾1Kohm, Max 2% R
Rated power: 0.0125 W
Max. Operating voltage: DC50V
Mechanical endurance: 500 cycles
Operating temperature: -25℃~+70℃

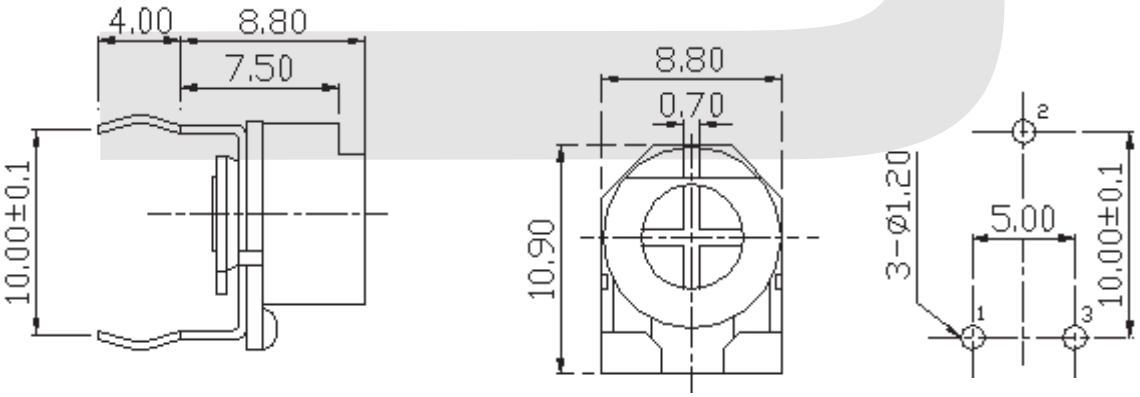

ORDER INFORMATION

Product No.: KLS4-WI0812 -103

Pos. No.
8mm Trimmer potentiometer Series
Value: 103- 10000Ω

Trimmer Potentiometer

KLS4-WI0303 Series

FEATURES

This specification applies to the variable resistors for electronic equipment Polyester substrate.

- ∗Long life model for low cost control pot applications
- ∗Since a variety of types are available,they can be used for a wide range of products
- ∗Special tapers
- ∗Low torque option



MECHANICAL SPECIFICATIONS

rotation angle: 240 ° ± 10 °
rotation torque :2-35mN. M

ELECTRICAL SPECIFICATIONS

Range of nominal resistance: 1000Ω-2MΩ
Resistance taper: B
Resistance tolerance: ± 20%
Rotational noise: 5% R
Residual resistance: R <1Kohm, Max 20ohm, R ⩾1Kohm, Max 2% R
Rated power: 0.1 W
Max. Operating voltage: DC50V
Mechanical endurance: 1000 cycles
Operating temperature: -25℃~+70℃

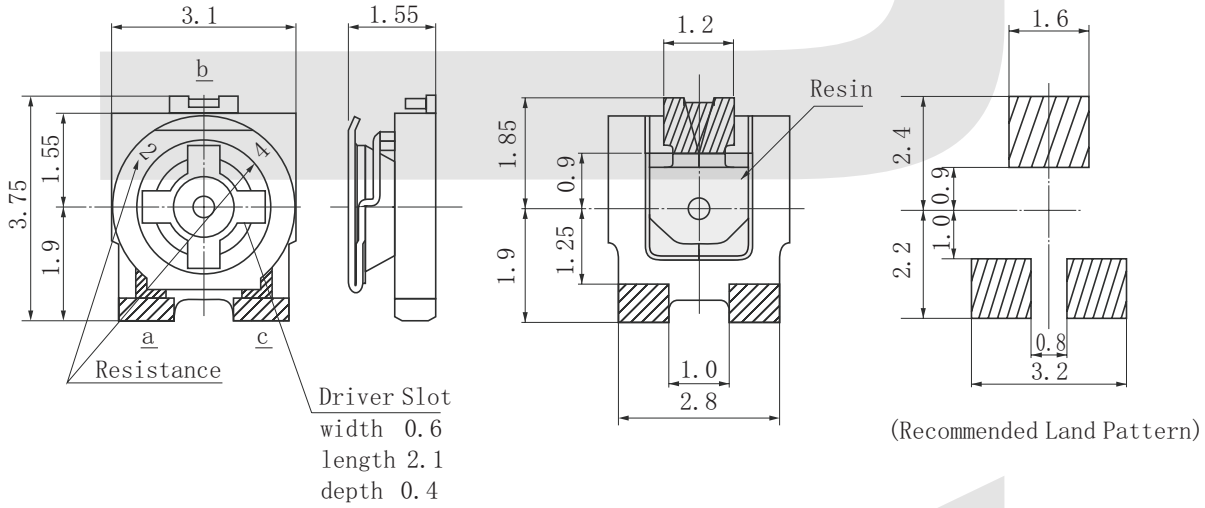

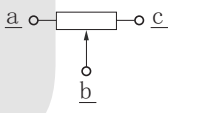

(Circuit diagram)

ORDER INFORMATION

Product No.: KLS4- WI0303 -103

Pos. No.
3mm Trimmer potentiometer Series
Value: 103- 10000Ω

Wire-Wound Potentionmeter Series

KLS4-3590-H-22-6A Turns Counting Dials Series



H-22 MOUNTING INSTRUCTIONS

1. Insert potentiometer in panel.
2. Install anti-rotation device using hardware supplied with potentiometer.
3. Turn potentiometer shaft counterclockwise to minimum resistance or voltage ratio.
4. Set the dial to "0.0" and brake on.
5. Insert the dial on the potentiometer shaft lightly against the panel.
6. Tighten set screw to potentiometer shaft.

Mechanical and Physical Characteristics

Number of Turns : 0 ~ 15
Dial Divisions : 50 per turn
Readability - Over 10 Turns: 2 parts in 1000
Torque With Brake Engaged : 500 g-cm min.
Markings: Black on satin chrome background or white on black background
Locking Brake: Yes
Weight: 15 grams
Set Screw: UNC N2-56, one included
Set Screw Tightening Torque: 16.94 N-cm min.
Hex Key Size: 0.05 in. hex

Shaft and Bushing Requirements

Shaft Diameter Requirements: Refer to chart below
Shaft Extension Beyond Panel: 18.1 mm Min. 22.2 mm Max.
Bushing Extension Beyond Panel: 9.53 mm Max.

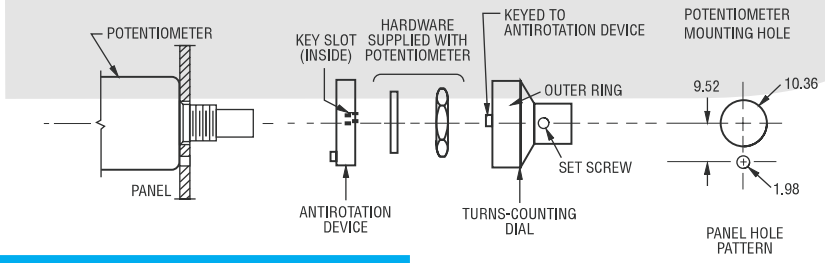

Dimensional Drawings

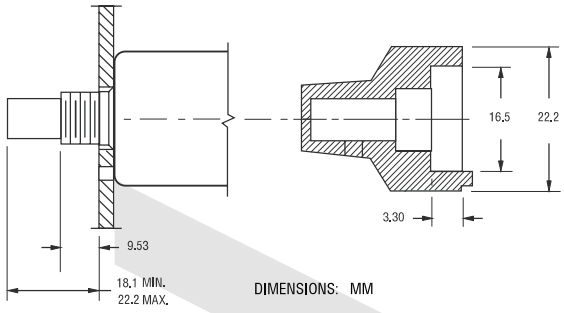

ORDER INFORMATION

Product No.: KLS4-3590-H-22-6A

Pos. No.
Turns Counting Dials Series

Dimmer Potentiometer Series

KLS4-RV16A-2S-24T (SPST) Dimmer Potentiometer

FEATURES

*VDE, NEMKO, CB, RECOGNIZED
*Conforms to 1058-1/ENN61058-1(VDE0630) Standard
*High reliability, long life, big switch capacity type
*Form C(SPDT-NO) Contact
*Glass fiber-filled flame-retardant polymer
*Solder terminal
*Used for lighting fixture, dimmer, etc



MECHANICAL SPECIFICATIONS

Total Rotation angle: 270°±5°
Rotation Torque: 1∽10mN.m
Shaft Stop strength: 3Kgf.cm
Switch working stroke: (3± 0.5)mm
Switch working force: 50∽300gf.cm
Click position:0/15/27/36/detents
Temperature Range: -20°C ~ 70°C
Mechanical life:50000 cycles
Electrical life:30000 cycles

ELECTRICAL SPECIFICATIONS

Switch Rating:10A250VAC
Switch contact Resistance:30Ω Max.
Rated wattage: Linear taper B 0.2W, other tapers 0.05W
Rated Voltage: 250V
Insulation resistance: 100MΩ Min. at DC500V
Dielectric: AC1500V, 1 minute(between carbon plate and contact)
AC750V, 1 minute(between open contact)
Resistance tolerance:±20%
Rotational noise:≤47mV
Residual resistance: ≤1%R

Dimensions (unit: mm)

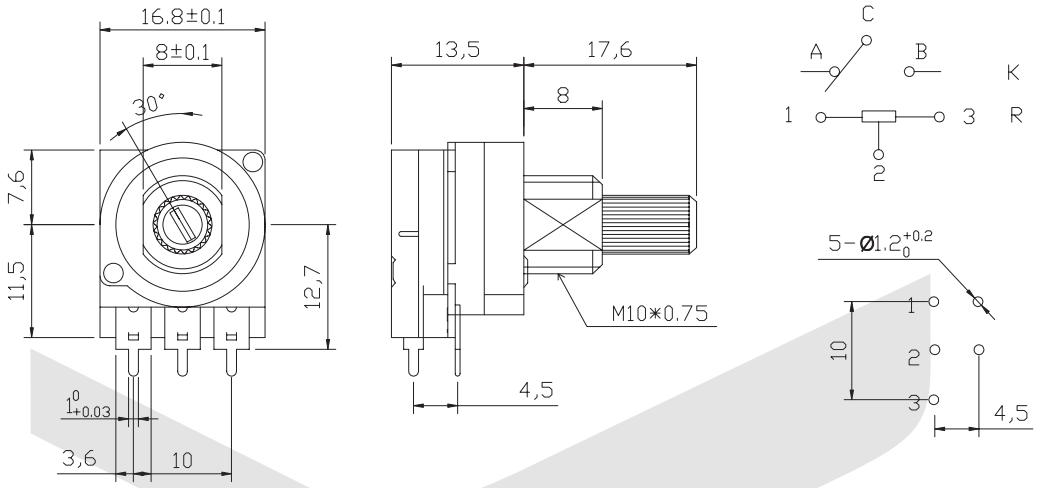

ORDER INFORMATION

Product No.: KLS4-RV16A-2S-24T

Pos. No.
Dimmer potentiometer Series

Dimmer Potentiometer Series

KLS4-RV16R-2S（SPST） Dimmer Potentiometer

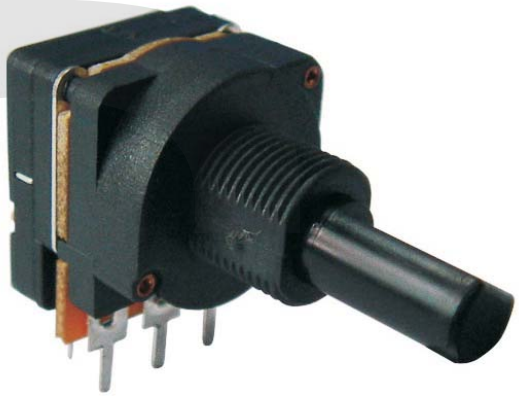

FEATURES

*VDE, NEMKO, CB, RECOGNIZED
*Conforms to 1058-1/ENN61058-1（VDE0630） Standard
*High reliability, long life, big switch capacity type
*Form C（SPDT-NO） Contact
*Glass fiber-filled flame-retardant polymer
*Solder terminal
*Used for lighting fixture, dimmer, etc

MECHANICAL SPECIFICATIONS

Total Rotation angle: 270°±5°
Rotation Torque: 1∽10mN.m
Shaft Stop strength: 3Kgf.cm
Switch working stroke: (3± 0.5)mm
Switch working force: 50∽300gf.cm
Click position:0/15/27/36/detents
Temperature Range: -20°C ~ 70°C
Mechanical life:50000 cycles
Electrical life:30000 cycles

ELECTRICAL SPECIFICATIONS

Switch Rating:10A250VAC
Switch contact Resistance:30Ω Max.
Rated wattage: Linear taper B 0.2W, other tapers 0.05W
Rated Voltage: 250V
Insulation resistance: 100MΩ Min. at DC500V
Dielectric: AC1500V, 1 minute（between carbon plate and contact）
AC750V, 1 minute（between open contact）
Resistance tolerance:±20%
Rotational noise:≤47mV
Residual resistance: ≤1%R

Dimensions （unit：mm）

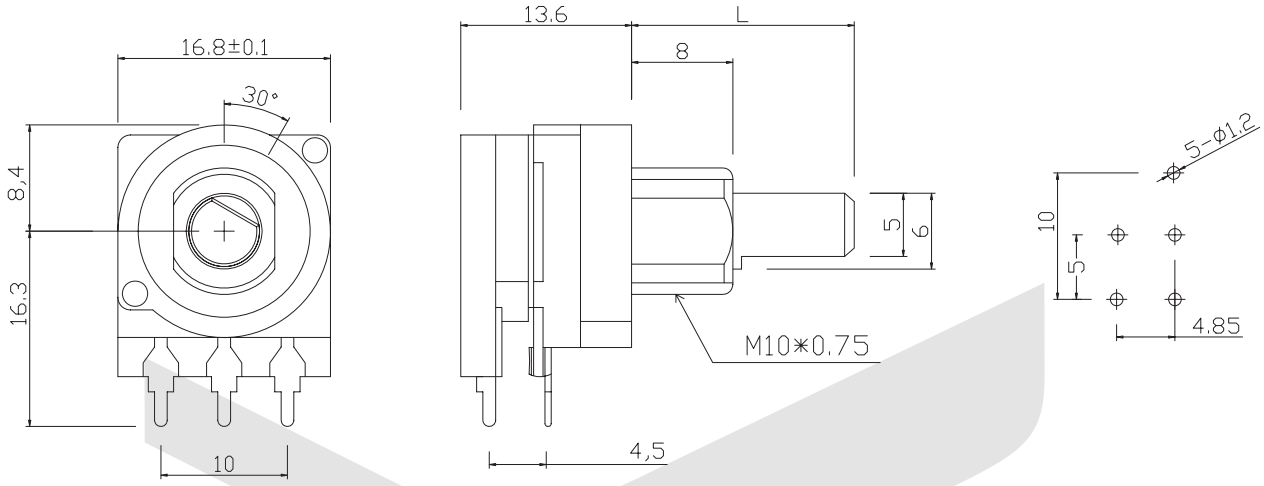

ORDER INFORMATION

Product No.: KLS4- RV16R-2S - L

Pos. No.
Dimmer potentiometer Series
Shaft dimensions

Dimmer Potentiometer Series

KLS4-RV16A-Φ6S-2（SPST） Dimmer Potentiometer



FEATURES

*VDE, NEMKO, CB, RECOGNIZED
*Conforms to 1058-1/ENN61058-1（VDE0630） Standard
*High reliability, long life, big switch capacity type
*Form C（SPDT-NO） Contact
*Glass fiber-filled flame-retardant polymer
*Solder terminal
*Used for lighting fixture, dimmer, etc

MECHANICAL SPECIFICATIONS

Total Rotation angle: 270°±5°
Rotation Torque: 1∽10mN.m
Shaft Stop strength: 3Kgf.cm
Switch working stroke: (3± 0.5)mm
Switch working force: 50∽300gf.cm
Click position:0/15/27/36/detents
Temperature Range: -20°C ~ 70°C
Mechanical life:50000 cycles
Electrical life:30000 cycles

ELECTRICAL SPECIFICATIONS

Switch Rating:10A250VAC
Switch contact Resistance:30Ω Max.
Rated wattage: Linear taper B 0.2W, other tapers 0.05W
Rated Voltage: 250V
Insulation resistance: 100MΩ Min. at DC500V
Dielectric: AC1500V, 1 minute（between carbon plate and contact）
AC750V, 1 minute（between open contact）
Resistance tolerance:±20%
Rotational noise:≤47mV
Residual resistance: ≤1%R

Dimensions （unit：mm）

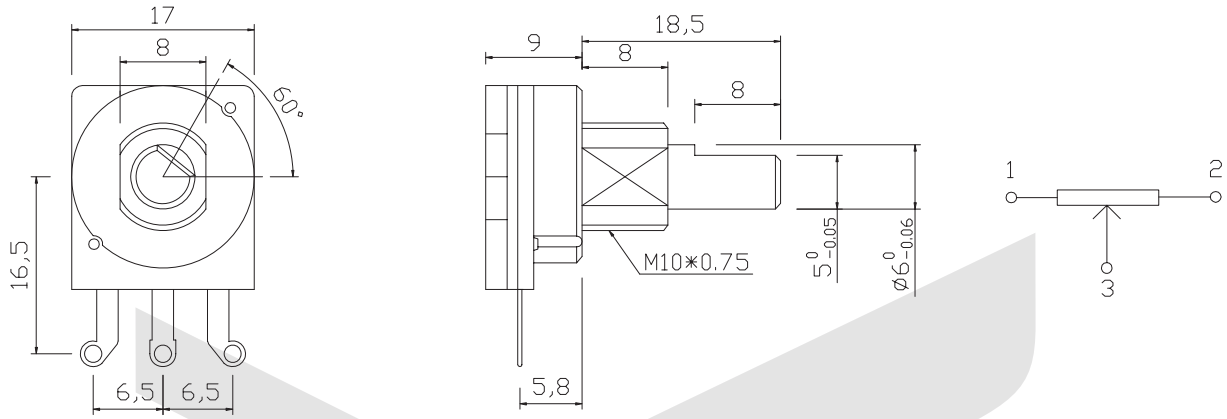

ORDER INFORMATION

Product No.: KLS4-RV16A-Φ6S-2

Pos. No.
Dimmer potentiometer Series

Dimmer Potentiometer Series

KLS4-RV16C-40-1（SPST） Dimmer Potentiometer

FEATURES

*VDE, NEMKO, CB, RECOGNIZED
*Conforms to 1058-1/ENN61058-1（VDE0630） Standard
*High reliability, long life, big switch capacity type
*Form C（SPDT-NO） Contact
*Glass fiber-filled flame-retardant polymer
*Solder terminal
*Used for lighting fixture, dimmer, etc



MECHANICAL SPECIFICATIONS

Total Rotation angle: 270°±5°
Rotation Torque: 1∽10mN.m
Shaft Stop strength: 3Kgf.cm
Switch working stroke: (3± 0.5)mm
Switch working force: 50∽300gf.cm
Click position:0/15/27/36/detents
Temperature Range: -20°C ~ 70°C
Mechanical life:50000 cycles
Electrical life:30000 cycles

ELECTRICAL SPECIFICATIONS

Switch Rating:10A250VAC
Switch contact Resistance:30Ω Max.
Rated wattage: Linear taper B 0.2W, other tapers 0.05W
Rated Voltage: 250V
Insulation resistance: 100MΩ Min. at DC500V
Dielectric: AC1500V, 1 minute（between carbon plate and contact）
AC750V, 1 minute（between open contact）
Resistance tolerance:±20%
Rotational noise:≤47mV
Residual resistance: ≤1%R

Dimensions （unit：mm）

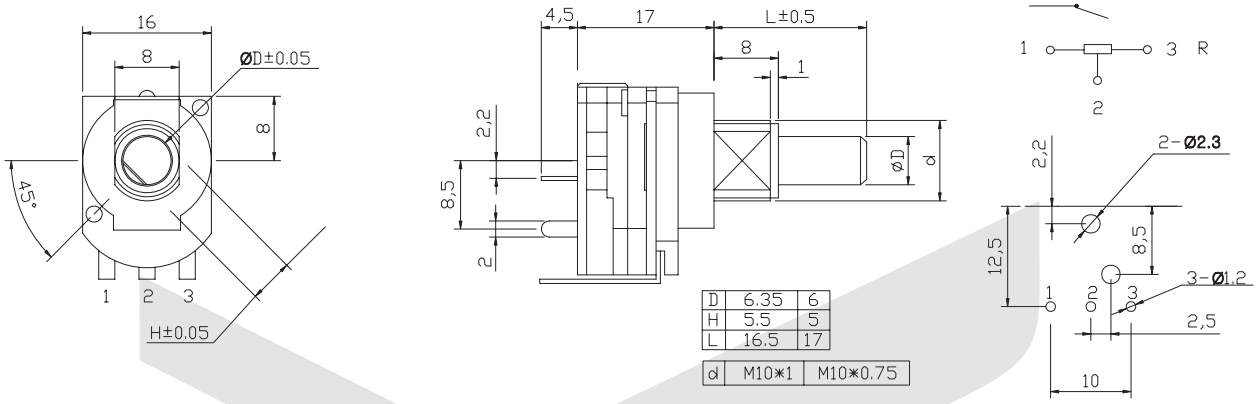

ORDER INFORMATION

Product No.: KLS4-RV16C-40-1 - D*L*d

Pos. No.
Dimmer potentiometer Series
Shaft dimensions

Dimmer Potentiometer Series

KLS4-RV16C-40-2（SPST） Dimmer Potentiometer

FEATURES

*VDE, NEMKO, CB, RECOGNIZED
*Conforms to 1058-1/ENN61058-1（VDE0630） Standard
*High reliability, long life, big switch capacity type
*Form C（SPDT-NO） Contact
*Glass fiber-filled flame-retardant polymer
*Solder terminal
*Used for lighting fixture, dimmer, etc



MECHANICAL SPECIFICATIONS

Total Rotation angle: 270°±5°
Rotation Torque: 1∽10mN.m
Shaft Stop strength: 3Kgf.cm
Switch working stroke: (3± 0.5)mm
Switch working force: 50∽300gf.cm
Click position:0/15/27/36/detents
Temperature Range: -20°C ~ 70°C
Mechanical life:50000 cycles
Electrical life:30000 cycles

ELECTRICAL SPECIFICATIONS

Switch Rating:10A250VAC
Switch contact Resistance:30Ω Max.
Rated wattage: Linear taper B 0.2W, other tapers 0.05W
Rated Voltage: 250V
Insulation resistance: 100MΩ Min. at DC500V
Dielectric: AC1500V, 1 minute（between carbon plate and contact）
AC750V, 1 minute（between open contact）
Resistance tolerance:±20%
Rotational noise:≤47mV
Residual resistance: ≤1%R

Dimensions （unit：mm）

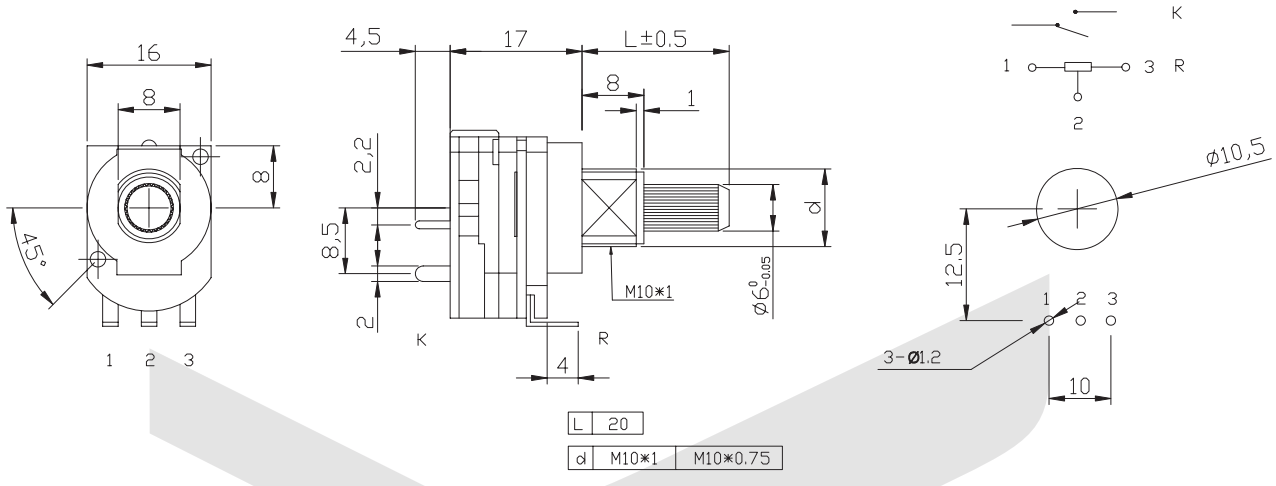

L	20	
d	M10*1	M10*0.75

ORDER INFORMATION

Product No.: KLS4-RV16C-40-2 - L*d

Pos. No.
Dimmer potentiometer Series
Shaft dimensions

Dimmer Potentiometer Series

IV

KLS4-RV16C-40-3（SPST） Dimmer Potentiometer



FEATURES

*VDE, NEMKO, CB, RECOGNIZED
*Conforms to 1058-1/ENN61058-1（VDE0630） Standard
*High reliability, long life, big switch capacity type
*Form C（SPDT-NO） Contact
*Glass fiber-filled flame-retardant polymer
*Solder terminal
*Used for lighting fixture, dimmer, etc

MECHANICAL SPECIFICATIONS

Total Rotation angle: 270°±5°
Rotation Torque: 1∽10mN.m
Shaft Stop strength: 3Kgf.cm
Switch working stroke: (3± 0.5)mm
Switch working force: 50∽300gf.cm
Click position:0/15/27/36/detents
Temperature Range: -20°C ~ 70°C
Mechanical life:50000 cycles
Electrical life:30000 cycles

ELECTRICAL SPECIFICATIONS

Switch Rating:10A250VAC
Switch contact Resistance:30Ω Max.
Rated wattage: Linear taper B 0.2W, other tapers 0.05W
Rated Voltage: 250V
Insulation resistance: 100MΩ Min. at DC500V
Dielectric: AC1500V, 1 minute（between carbon plate and contact）
AC750V, 1 minute（between open contact）
Resistance tolerance:±20%
Rotational noise:≤47mV
Residual resistance: ≤1%R

Dimensions （unit：mm）

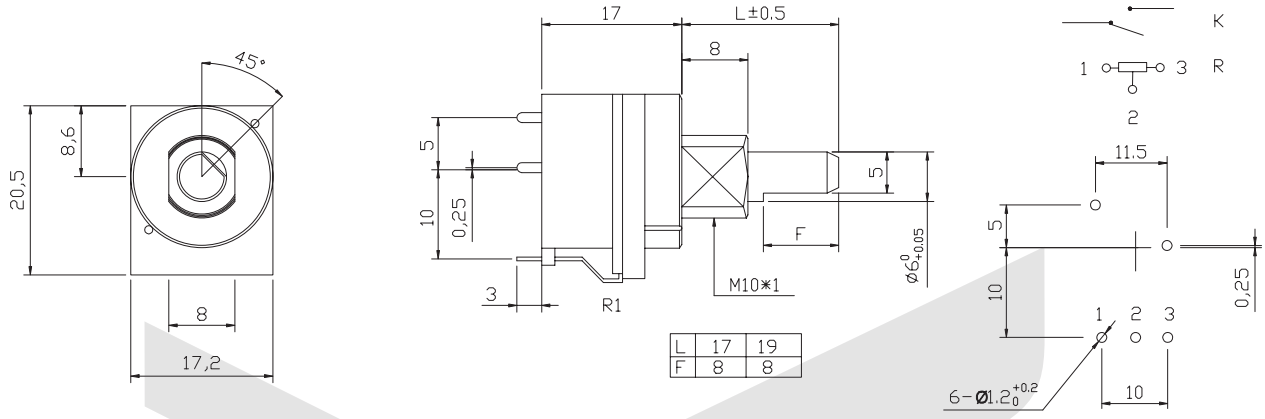

ORDER INFORMATION

Product No.: KLS4-RV16C-40-3 - L

Pos. No.
Dimmer potentiometer Series
Shaft dimensions

Dimmer Potentiometer Series

KLS4-RV16C-40-3-30R（DPST） Dimmer Potentiometer

FEATURES

*VDE, NEMKO, CB, RECOGNIZED
*Conforms to 1058-1/ENN61058-1（VDE0630） Standard
*High reliability, long life, big switch capacity type
*Form C（SPDT-NO） Contact
*Glass fiber-filled flame-retardant polymer
*Solder terminal
*Used for lighting fixture, dimmer, etc



MECHANICAL SPECIFICATIONS

Total Rotation angle: 270°±5°
Rotation Torque: 1∽10mN.m
Shaft Stop strength: 3Kgf.cm
Switch working stroke: (3± 0.5)mm
Switch working force: 50∽300gf.cm
Click position:0/15/27/36/detents
Temperature Range: -20°C ~ 70°C
Mechanical life:50000 cycles
Electrical life:30000 cycles

ELECTRICAL SPECIFICATIONS

Switch Rating:10A250VAC
Switch contact Resistance:30Ω Max.
Rated wattage: Linear taper B 0.2W, other tapers 0.05W
Rated Voltage: 250V
Insulation resistance: 100MΩ Min. at DC500V
Dielectric: AC1500V, 1 minute（between carbon plate and contact）
AC750V, 1 minute（between open contact）
Resistance tolerance:±20%
Rotational noise:≤47mV
Residual resistance: ≤1%R

Dimensions （unit：mm）

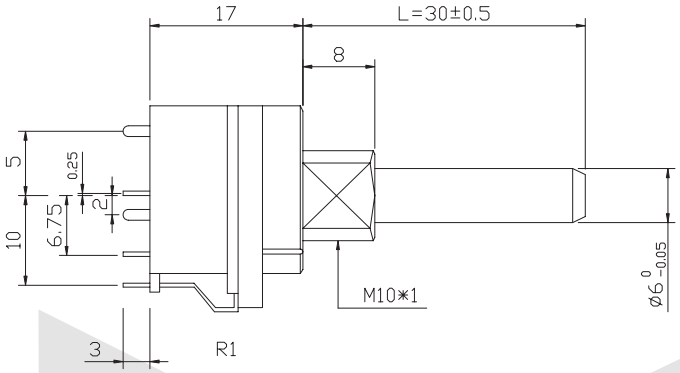

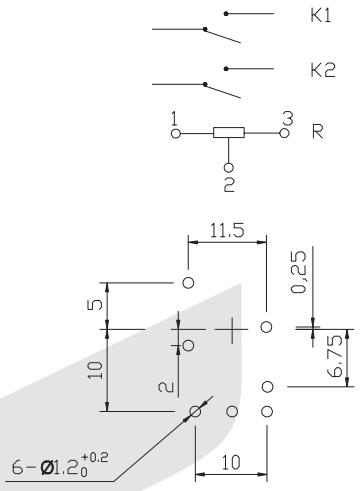

ORDER INFORMATION

Product No.: KLS4-RV16C-40-3-30R - L

Pos. No.
Dimmer potentiometer Series
Shaft dimensions

Dimmer Potentiometer Series

IV

KLS4-RV16C-40-3F (DPST) Dimmer Potentiometer



FEATURES

*VDE, NEMKO, CB, RECOGNIZED
*Conforms to 1058-1/ENN61058-1(VDE0630) Standard
*High reliability, long life, big switch capacity type
*Form C(SPDT-NO) Contact
*Glass fiber-filled flame-retardant polymer
*Solder terminal
*Used for lighting fixture, dimmer, etc

MECHANICAL SPECIFICATIONS

Total Rotation angle: 270°±5°
Rotation Torque: 1∽10mN.m
Shaft Stop strength: 3Kgf.cm
Switch working stroke: (3± 0.5)mm
Switch working force: 50∽300gf.cm
Click position:0/15/27/36/detents
Temperature Range: -20°C ~ 70°C
Mechanical life:50000 cycles
Electrical life:30000 cycles

ELECTRICAL SPECIFICATIONS

Switch Rating:10A250VAC
Switch contact Resistance:30Ω Max.
Rated wattage: Linear taper B 0.2W, other tapers 0.05W
Rated Voltage: 250V
Insulation resistance: 100MΩ Min. at DC500V
Dielectric: AC1500V, 1 minute(between carbon plate and contact)
AC750V, 1 minute(between open contact)
Resistance tolerance:±20%
Rotational noise:≤47mV
Residual resistance: ≤1%R

Dimensions (unit: mm)

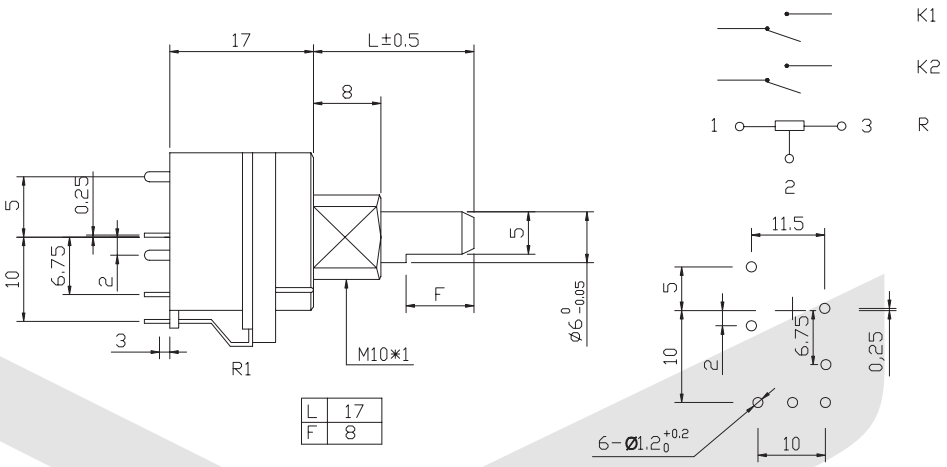

L	17
F	8

ORDER INFORMATION

Product No.: KLS4-RV16C-40-3F - L

Pos. No.
Dimmer potentiometer Series
Shaft dimensions

Dimmer Potentiometer Series

KLS4-RV16C-40-5 (SPST) Dimmer Potentiometer

FEATURES

*VDE, NEMKO, CB, RECOGNIZED
*Conforms to 1058-1/ENN61058-1 (VDE0630) Standard
*High reliability, long life, big switch capacity type
*Form C (SPDT-NO) Contact
*Glass fiber-filled flame-retardant polymer
*Solder terminal
*Used for lighting fixture, dimmer, etc



MECHANICAL SPECIFICATIONS

Total Rotation angle: 270°±5°
Rotation Torque: 1∽10mN.m
Shaft Stop strength: 3Kgf.cm
Switch working stroke: (3± 0.5)mm
Switch working force: 50∽300gf.cm
Click position:0/15/27/36/detents
Temperature Range: -20°C ~ 70°C
Mechanical life:50000 cycles
Electrical life:30000 cycles

ELECTRICAL SPECIFICATIONS

Switch Rating:10A250VAC
Switch contact Resistance:30Ω Max.
Rated wattage: Linear taper B 0.2W, other tapers 0.05W
Rated Voltage: 250V
Insulation resistance: 100MΩ Min. at DC500V
Dielectric: AC1500V, 1 minute (between carbon plate and contact)
AC750V, 1 minute (between open contact)
Resistance tolerance:±20%
Rotational noise:≤47mV
Residual resistance: ≤1%R

Dimensions (unit: mm)

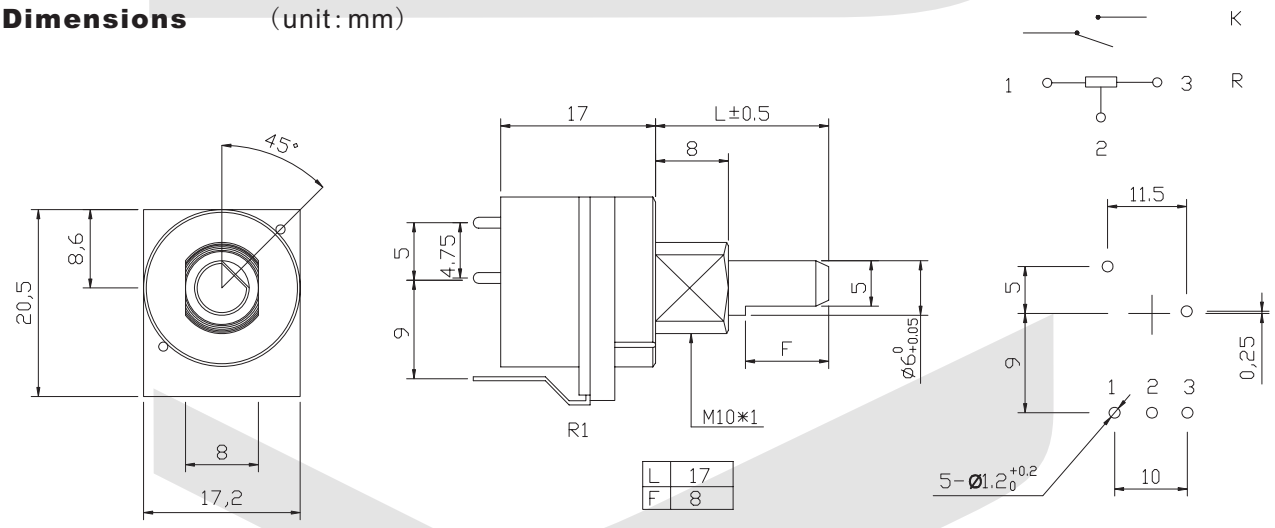

ORDER INFORMATION

Product No.: KLS4-RV16C-40-5 - L

Pos. No.
Dimmer potentiometer Series
Shaft dimensions

Dimmer Potentiometer Series

KLS4-RV16C-40-7（SPST） Dimmer Potentiometer

FEATURES

*VDE, NEMKO, CB, RECOGNIZED
*Conforms to 1058-1/ENN61058-1（VDE0630） Standard
*High reliability, long life, big switch capacity type
*Form C（SPDT-NO） Contact
*Glass fiber-filled flame-retardant polymer
*Solder terminal
*Used for lighting fixture, dimmer, etc



MECHANICAL SPECIFICATIONS

Total Rotation angle: 270°±5°
Rotation Torque: 1∽10mN.m
Shaft Stop strength: 3Kgf.cm
Switch working stroke: (3± 0.5)mm
Switch working force: 50∽300gf.cm
Click position:0/15/27/36/detents
Temperature Range: -20°C ~ 70°C
Mechanical life:50000 cycles
Electrical life:30000 cycles

ELECTRICAL SPECIFICATIONS

Switch Rating:10A250VAC
Switch contact Resistance:30Ω Max.
Rated wattage: Linear taper B 0.2W, other tapers 0.05W
Rated Voltage: 250V
Insulation resistance: 100MΩ Min. at DC500V
Dielectric: AC1500V, 1 minute（between carbon plate and contact）
AC750V, 1 minute（between open contact）
Resistance tolerance:±20%
Rotational noise:≤47mV
Residual resistance: ≤1%R

Dimensions （unit：mm）

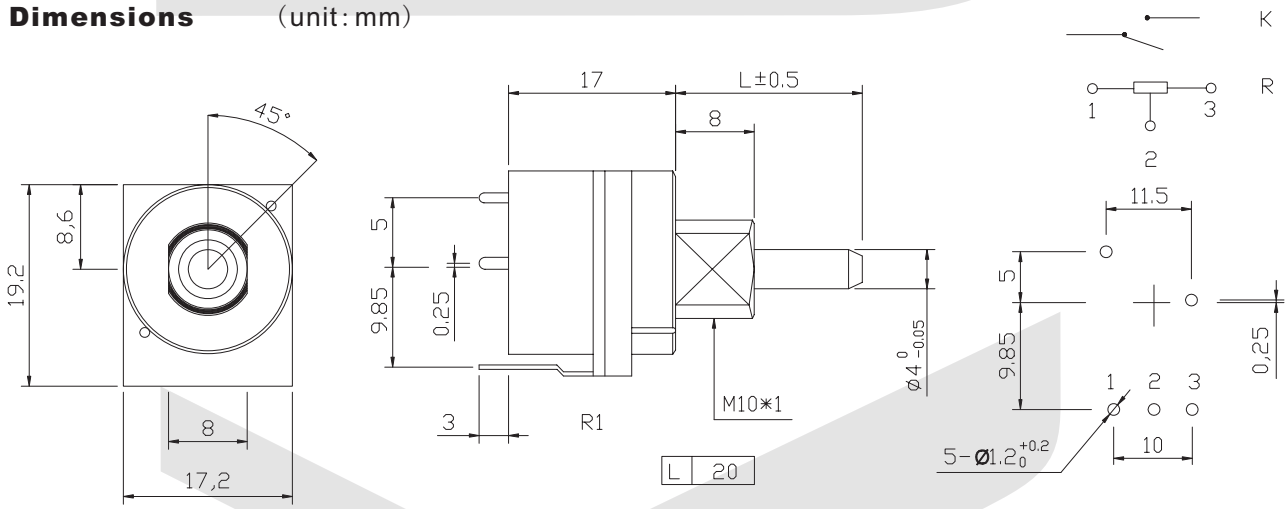

ORDER INFORMATION

Product No.: KLS4-RV16C-40-7 - L

Pos. No.
Dimmer potentiometer Series
Shaft dimensions

Dimmer Potentiometer Series

KLS4-RV16C-40-8（SPST） Dimmer Potentiometer

IV

FEATURES

*VDE, NEMKO, CB, RECOGNIZED
*Conforms to 1058-1/ENN61058-1（VDE0630） Standard
*High reliability, long life, big switch capacity type
*Form C（SPDT-NO） Contact
*Glass fiber-filled flame-retardant polymer
*Solder terminal
*Used for lighting fixture, dimmer, etc



MECHANICAL SPECIFICATIONS

Total Rotation angle: 270°±5°
Rotation Torque: 1∽10mN.m
Shaft Stop strength: 3Kgf.cm
Switch working stroke: (3± 0.5)mm
Switch working force: 50∽300gf.cm
Click position:0/15/27/36/detents
Temperature Range: -20°C ~ 70°C
Mechanical life:50000 cycles
Electrical life:30000 cycles

ELECTRICAL SPECIFICATIONS

Switch Rating:10A250VAC
Switch contact Resistance:30Ω Max.
Rated wattage: Linear taper B 0.2W, other tapers 0.05W
Rated Voltage: 250V
Insulation resistance: 100MΩ Min. at DC500V
Dielectric: AC1500V, 1 minute（between carbon plate and contact）
AC750V, 1 minute（between open contact）
Resistance tolerance:±20%
Rotational noise:≤47mV
Residual resistance: ≤1%R

Dimensions （unit：mm）

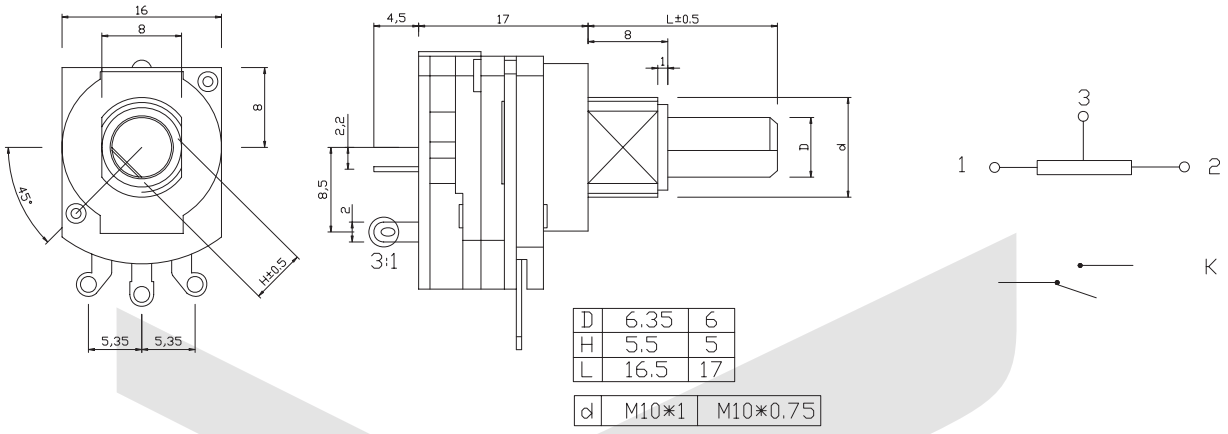

D	6.35	6
H	5.5	5
L	16.5	17

d	M10*1	M10*0.75

ORDER INFORMATION

Product No.: KLS4-RV16C-40-8 - D*L*d

Pos. No.
Dimmer potentiometer Series
Shaft dimensions

Dimmer Potentiometer Series

KLS4-RV24SD-10（SPDT） Dimmer Potentiometer

FEATURES

*VDE, NEMKO, CB, RECOGNIZED
*Conforms to 1058-1/ENN61058-1（VDE0630） Standard
*High reliability, long life, big switch capacity type
*Form C（SPDT-NO） Contact
*Glass fiber-filled flame-retardant polymer
*Solder terminal
*Used for lighting fixture, dimmer, etc



MECHANICAL SPECIFICATIONS

Total Rotation angle: 300°±5°
Rotation Torque: 20∽200gf.cm
Shaft Stop strength: 6Kgf.cm
Switch working stroke: (3± 0.5)mm
Switch working force: 50∽300gf.cm
Click position:0/15/27/36/detents
Temperature Range: -25°C ~ 105°C
Mechanical life:50000 cycles
Electrical life:30000 cycles

ELECTRICAL SPECIFICATIONS

Switch Rating:10A250VAC
Switch contact Resistance:30Ω Max.
Rated wattage: Linear taper B 0.5W, other tapers 0.25W
Rated Voltage: 500V
Insulation resistance: 100MΩ Min. at DC500V
Dielectric: AC1500V, 1 minute（between carbon plate and contact）
AC750V, 1 minute（between open contact）
Resistance tolerance:±20%
Rotational noise:≤47mV
Residual resistance: ≤1%R

Dimensions （unit：mm）

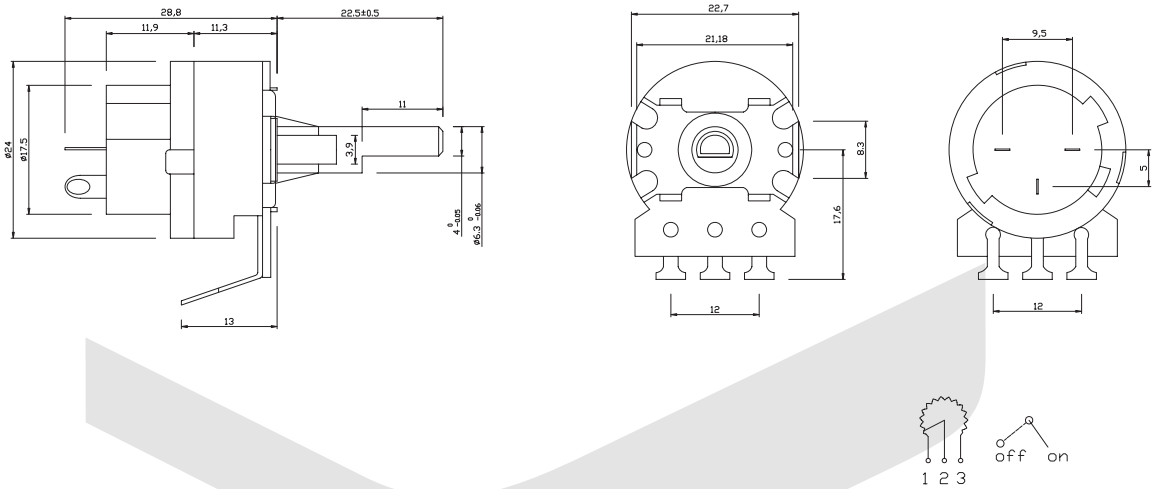

ORDER INFORMATION

Product No.: KLS4-RV24SD-10

Pos. No.
Dimmer potentiometer Series

Dimmer Potentiometer Series

KLS4-WH116AK-1（SPDT） Dimmer Potentiometer



FEATURES

*VDE, NEMKO, CB, RECOGNIZED
*Conforms to 1058-1/ENN61058-1（VDE0630） Standard
*High reliability, long life, big switch capacity type
*Form C（SPDT-NO） Contact
*Glass fiber-filled flame-retardant polymer
*Solder terminal
*Used for lighting fixture, dimmer, etc

MECHANICAL SPECIFICATIONS

Total Rotation angle: 270°±5°
Rotation Torque: 1∽10mN.m
Shaft Stop strength: 3Kgf.cm
Switch working stroke: (3± 0.5)mm
Switch working force: 50∽300gf.cm
Click position:0/15/27/36/detents
Temperature Range: -25°C ~ 105°C
Mechanical life:50000 cycles
Electrical life:30000 cycles

ELECTRICAL SPECIFICATIONS

Switch Rating:10A250VAC
Switch contact Resistance:30Ω Max.
Rated wattage: Linear taper B 0.2W, other tapers 0.05W
Rated Voltage: 250V
Insulation resistance: 100MΩ Min. at DC500V
Dielectric: AC1500V, 1 minute（between carbon plate and contact）
AC750V, 1 minute（between open contact）
Resistance tolerance:±20%
Rotational noise:≤47mV
Residual resistance: ≤1%R

Dimensions （unit：mm）

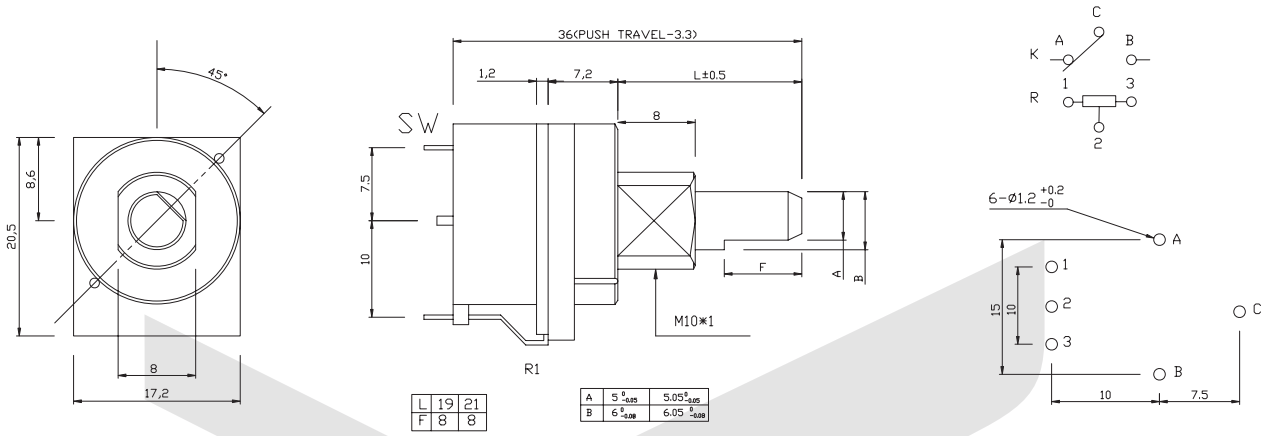

ORDER INFORMATION

Product No.: KLS4-WH116AK-1-BxL

Pos. No.
Dimmer potentiometer Series
Shaft dimensions

Dimmer Potentiometer Series

KLS4-WH116AK-2（SPDT） Dimmer Potentiometer

FEATURES

*VDE, NEMKO, CB, RECOGNIZED
*Conforms to 1058-1/ENN61058-1（VDE0630） Standard
*High reliability, long life, big switch capacity type
*Form C（SPDT-NO） Contact
*Glass fiber-filled flame-retardant polymer
*Solder terminal
*Used for lighting fixture, dimmer, etc



MECHANICAL SPECIFICATIONS

Total Rotation angle: 270°±5°
Rotation Torque: 1∽10mN.m
Shaft Stop strength: 3Kgf.cm
Switch working stroke: (3± 0.5)mm
Switch working force: 50∽300gf.cm
Click position:0/15/27/36/detents
Temperature Range: -25°C ~ 105°C
Mechanical life:50000 cycles
Electrical life:30000 cycles

ELECTRICAL SPECIFICATIONS

Switch Rating:10A250VAC
Switch contact Resistance:30Ω Max.
Rated wattage: Linear taper B 0.2W, other tapers 0.05W
Rated Voltage: 250V
Insulation resistance: 100MΩ Min. at DC500V
Dielectric: AC1500V, 1 minute（between carbon plate and contact）
AC750V, 1 minute（between open contact）
Resistance tolerance:±20%
Rotational noise:≤47mV
Residual resistance: ≤1%R

Dimensions （unit：mm）

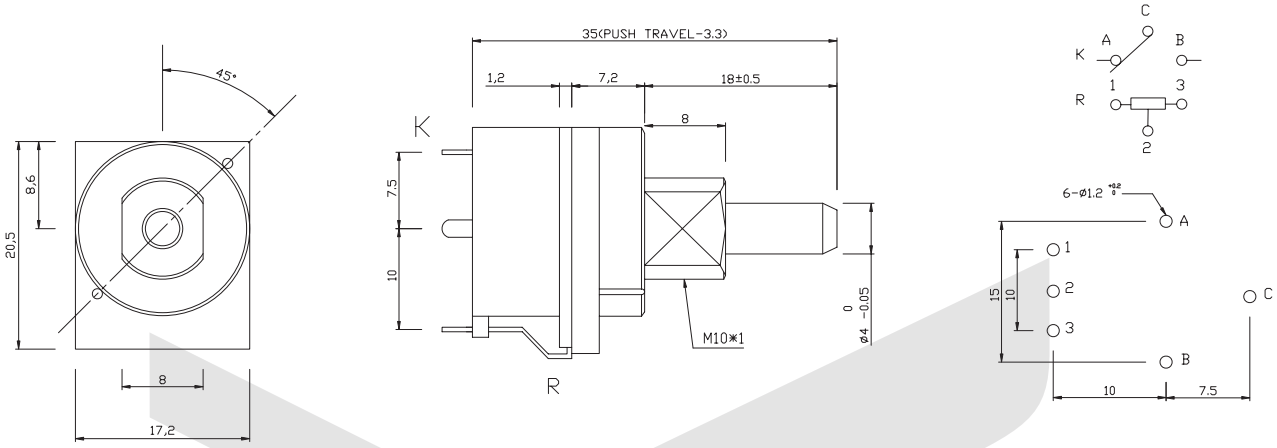

ORDER INFORMATION

Product No.: KLS4-WH116AK-2-4x18

Pos. No.
Dimmer potentiometer Series
Shaft dimensions

Dimmer Potentiometer Series

KLS4-WH116AK-4F（SPDT） Dimmer Potentiometer

FEATURES

*VDE, NEMKO, CB, RECOGNIZED
*Conforms to 1058-1/ENN61058-1（VDE0630） Standard
*High reliability, long life, big switch capacity type
*Form C（SPDT-NO） Contact
*Glass fiber-filled flame-retardant polymer
*Solder terminal
*Used for lighting fixture, dimmer, etc



MECHANICAL SPECIFICATIONS

Total Rotation angle: 270°±5°
Rotation Torque: 1∽10mN.m
Shaft Stop strength: 3Kgf.cm
Switch working stroke: (3± 0.5)mm
Switch working force: 50∽300gf.cm
Click position:0/15/27/36/detents
Temperature Range: -25°C ~ 105°C
Mechanical life:50000 cycles
Electrical life:30000 cycles

ELECTRICAL SPECIFICATIONS

Switch Rating:10A250VAC
Switch contact Resistance:30Ω Max.
Rated wattage: Linear taper B 0.2W, other tapers 0.05W
Rated Voltage: 250V
Insulation resistance: 100MΩ Min. at DC500V
Dielectric: AC1500V, 1 minute（between carbon plate and contact）
AC750V, 1 minute（between open contact）
Resistance tolerance:±20%
Rotational noise:≤47mV
Residual resistance: ≤1%R

Dimensions （unit：mm）

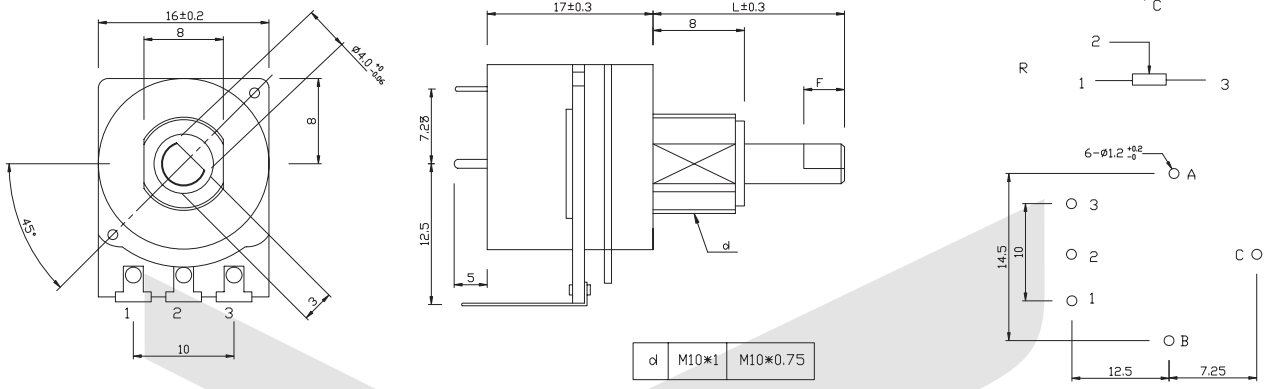

ORDER INFORMATION

Product No.: KLS4-WH116AK-4F-M10*1xL

Pos. No.
Dimmer potentiometer Series
Shaft dimensions

Dimmer Potentiometer Series

KLS4-WH116AK-4R-1（SPDT） Dimmer Potentiometer

FEATURES

*VDE, NEMKO, CB, RECOGNIZED
*Conforms to 1058-1/ENN61058-1（VDE0630） Standard
*High reliability, long life, big switch capacity type
*Form C（SPDT-NO） Contact
*Glass fiber-filled flame-retardant polymer
*Solder terminal
*Used for lighting fixture, dimmer, etc



MECHANICAL SPECIFICATIONS

Total Rotation angle: 270°±5°
Rotation Torque: 1∽10mN.m
Shaft Stop strength: 3Kgf.cm
Switch working stroke: (3± 0.5)mm
Switch working force: 50∽300gf.cm
Click position:0/15/27/36/detents
Temperature Range: -25°C ~ 105°C
Mechanical life:50000 cycles
Electrical life:30000 cycles

ELECTRICAL SPECIFICATIONS

Switch Rating:10A250VAC
Switch contact Resistance:30Ω Max.
Rated wattage: Linear taper B 0.2W, other tapers 0.05W
Rated Voltage: 250V
Insulation resistance: 100MΩ Min. at DC500V
Dielectric: AC1500V, 1 minute（between carbon plate and contact）
AC750V, 1 minute（between open contact）
Resistance tolerance:±20%
Rotational noise:≤47mV
Residual resistance: ≤1%R

Dimensions （unit：mm）

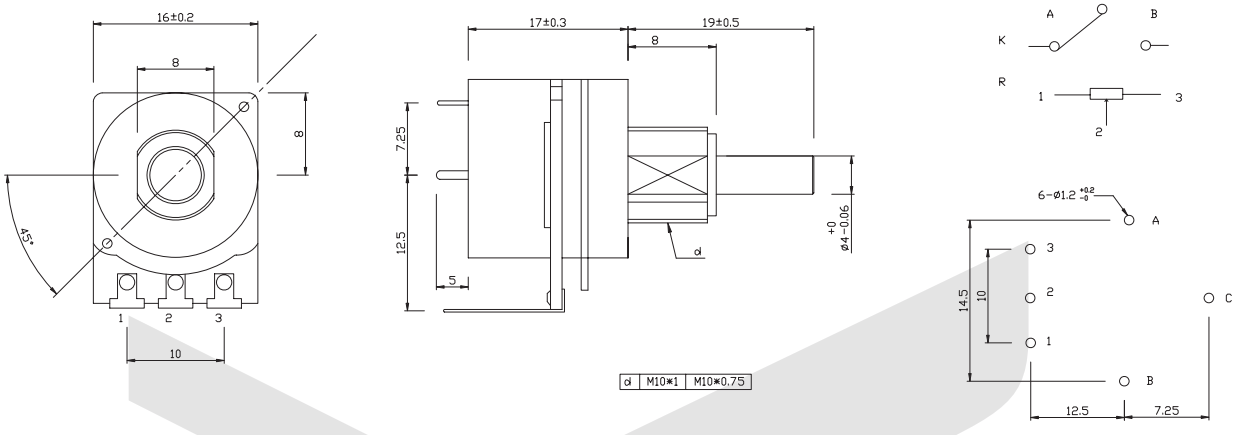

ORDER INFORMATION

Product No.: KLS4-WH116AK-4R-1-M10*1x19

Pos. No.
Dimmer potentiometer Series
Shaft dimensions

Dimmer Potentiometer Series

KLS4-WH116AK-4R-2（SPDT） Dimmer Potentiometer

FEATURES

*VDE, NEMKO, CB, RECOGNIZED
*Conforms to 1058-1/ENN61058-1（VDE0630） Standard
*High reliability, long life, big switch capacity type
*Form C（SPDT-NO） Contact
*Glass fiber-filled flame-retardant polymer
*Solder terminal
*Used for lighting fixture, dimmer, etc



MECHANICAL SPECIFICATIONS

Total Rotation angle: 270°±5°
Rotation Torque: 1∽10mN.m
Shaft Stop strength: 3Kgf.cm
Switch working stroke: (3± 0.5)mm
Switch working force: 50∽300gf.cm
Click position:0/15/27/36/detents
Temperature Range: -25°C ~ 105°C
Mechanical life:50000 cycles
Electrical life:30000 cycles

ELECTRICAL SPECIFICATIONS

Switch Rating:10A250VAC
Switch contact Resistance:30Ω Max.
Rated wattage: Linear taper B 0.2W, other tapers 0.05W
Rated Voltage: 250V
Insulation resistance: 100MΩ Min. at DC500V
Dielectric: AC1500V, 1 minute（between carbon plate and contact）
AC750V, 1 minute（between open contact）
Resistance tolerance:±20%
Rotational noise:≤47mV
Residual resistance: ≤1%R

Dimensions （unit：mm）

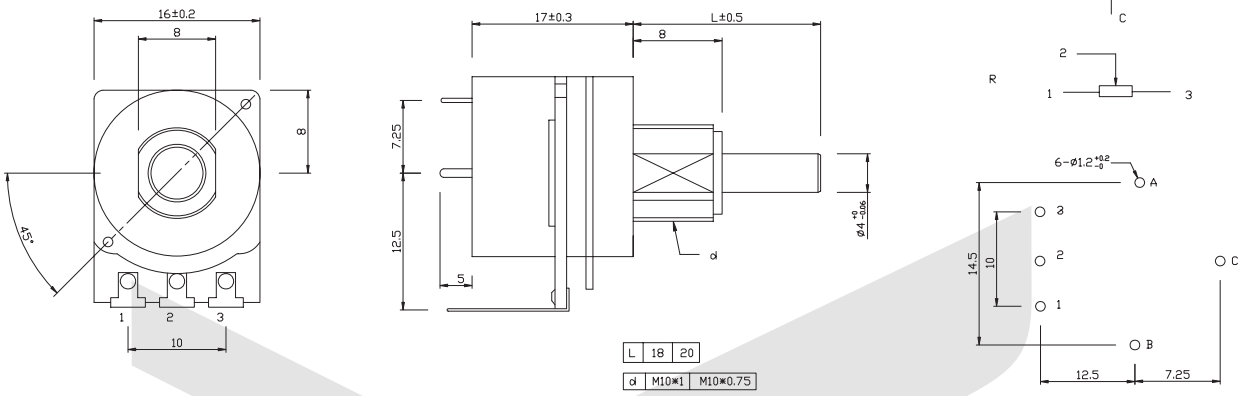

ORDER INFORMATION

Product No.: KLS4-WH116AK-4R-2-M10*1xL

Pos. No.
Dimmer potentiometer Series
Shaft dimensions

Dimmer Potentiometer Series

KLS4-WH116AK-5（SPDT） Dimmer Potentiometer

FEATURES

*VDE, NEMKO, CB, RECOGNIZED
*Conforms to 1058-1/ENN61058-1（VDE0630） Standard
*High reliability, long life, big switch capacity type
*Form C（SPDT-NO） Contact
*Glass fiber-filled flame-retardant polymer
*Solder terminal
*Used for lighting fixture, dimmer, etc

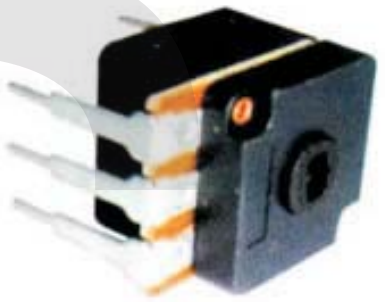

MECHANICAL SPECIFICATIONS

Total Rotation angle: 270°±5°
Rotation Torque: 1∽10mN.m
Shaft Stop strength: 3Kgf.cm
Switch working stroke: (3± 0.5)mm
Switch working force: 50∽300gf.cm
Click position:0/15/27/36/detents
Temperature Range: -25°C ~ 105°C
Mechanical life:50000 cycles
Electrical life:30000 cycles

ELECTRICAL SPECIFICATIONS

Switch Rating:10A250VAC
Switch contact Resistance:30Ω Max.
Rated wattage: Linear taper B 0.2W, other tapers 0.05W
Rated Voltage: 250V
Insulation resistance: 100MΩ Min. at DC500V
Dielectric: AC1500V, 1 minute（between carbon plate and contact）
AC750V, 1 minute（between open contact）
Resistance tolerance:±20%
Rotational noise:≤47mV
Residual resistance: ≤1%R

Dimensions （unit：mm）

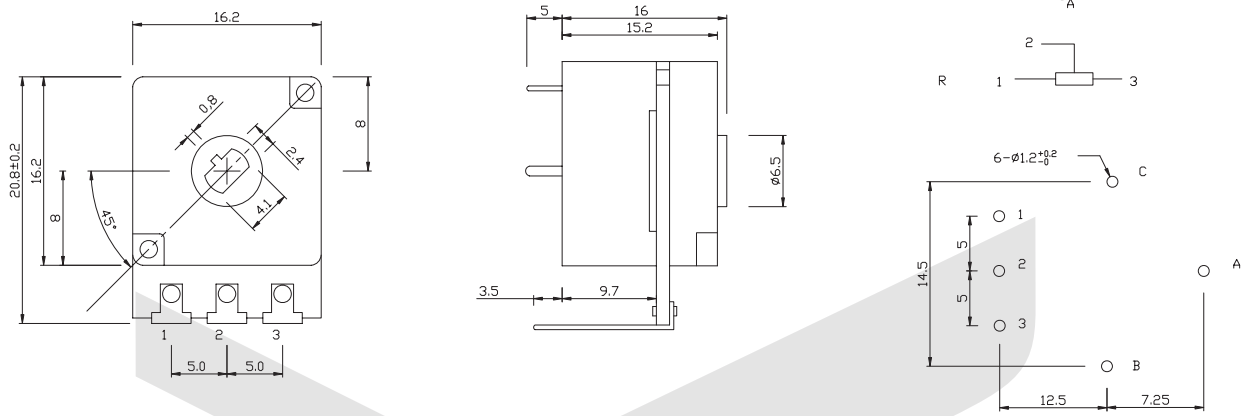

ORDER INFORMATION

Product No.: KLS4-WH116AK-5

Pos. No.
Dimmer potentiometer Series

Dimmer Potentiometer Series

KLS4-WH116AK-6（SPDT） Dimmer Potentiometer

FEATURES

*VDE, NEMKO, CB, RECOGNIZED
*Conforms to 1058-1/ENN61058-1（VDE0630） Standard
*High reliability, long life, big switch capacity type
*Form C（SPDT-NO） Contact
*Glass fiber-filled flame-retardant polymer
*Solder terminal
*Used for lighting fixture, dimmer, etc



MECHANICAL SPECIFICATIONS

Total Rotation angle: 270°±5°
Rotation Torque: 1∽10mN.m
Shaft Stop strength: 3Kgf.cm
Switch working stroke: (3± 0.5)mm
Switch working force: 50∽300gf.cm
Click position:0/15/27/36/detents
Temperature Range: -25°C ~ 105°C
Mechanical life:50000 cycles
Electrical life:30000 cycles

ELECTRICAL SPECIFICATIONS

Switch Rating:10A250VAC
Switch contact Resistance:30Ω Max.
Rated wattage: Linear taper B 0.2W, other tapers 0.05W
Rated Voltage: 250V
Insulation resistance: 100MΩ Min. at DC500V
Dielectric: AC1500V, 1 minute（between carbon plate and contact）
AC750V, 1 minute（between open contact）
Resistance tolerance:±20%
Rotational noise:≤47mV
Residual resistance: ≤1%R

Dimensions （unit：mm）

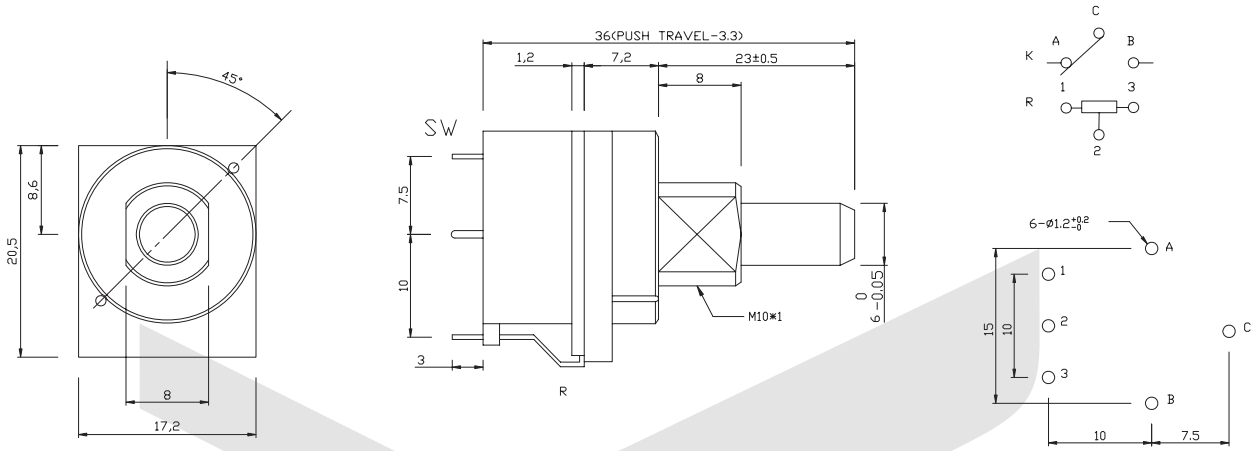

ORDER INFORMATION

Product No.: KLS4-WH116AK-6-6x23

Pos. No.
Dimmer potentiometer Series
Shaft dimensions

Dimmer Potentiometer Series

KLS4-WH116AK-40-3T（SPDT） Dimmer Potentiometer

FEATURES

*VDE, NEMKO, CB, RECOGNIZED
*Conforms to 1058-1/ENN61058-1（VDE0630） Standard
*High reliability, long life, big switch capacity type
*Form C（SPDT-NO） Contact
*Glass fiber-filled flame-retardant polymer
*Solder terminal
*Used for lighting fixture, dimmer, etc



MECHANICAL SPECIFICATIONS

Total Rotation angle: 270°±5°
Rotation Torque: 1∽10mN.m
Shaft Stop strength: 3Kgf.cm
Switch working stroke: (3± 0.5)mm
Switch working force: 50∽300gf.cm
Click position:0/15/27/36/detents
Temperature Range: -25°C ~ 105°C
Mechanical life:50000 cycles
Electrical life:30000 cycles

ELECTRICAL SPECIFICATIONS

Switch Rating:10A250VAC
Switch contact Resistance:30Ω Max.
Rated wattage: Linear taper B 0.2W, other tapers 0.05W
Rated Voltage: 250V
Insulation resistance: 100MΩ Min. at DC500V
Dielectric: AC1500V, 1 minute（between carbon plate and contact）
AC750V, 1 minute（between open contact）
Resistance tolerance:±20%
Rotational noise:≤47mV
Residual resistance: ≤1%R

Dimensions （unit：mm）

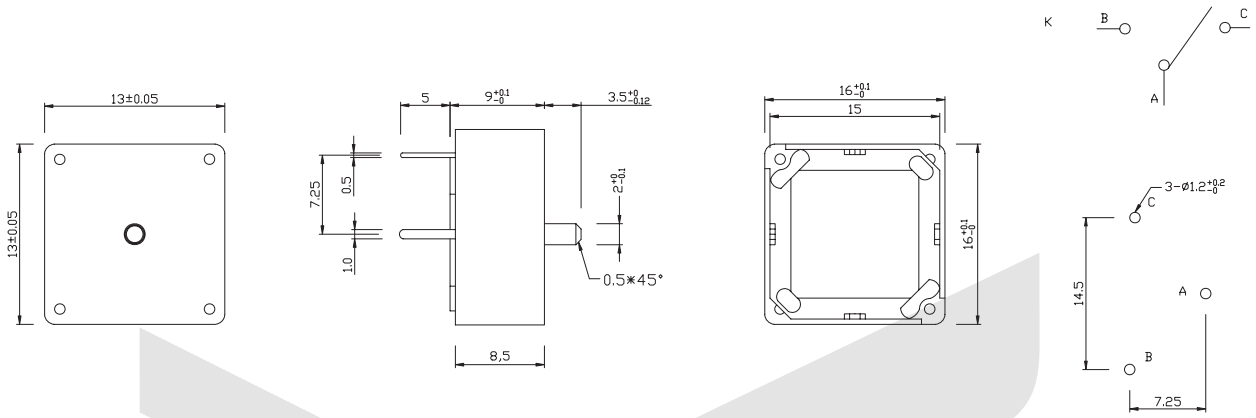

ORDER INFORMATION

Product No.: KLS4-WH116AK-40-3T

Pos. No.
Dimmer potentiometer Series

Dimmer Potentiometer Series

KLS4-WH0162-2J（SPST） Dimmer Potentiometer

FEATURES

*VDE, NEMKO, CB, RECOGNIZED
*Conforms to 1058-1/ENN61058-1（VDE0630） Standard
*High reliability, long life, big switch capacity type
*Form C（SPDT-NO） Contact
*Glass fiber-filled flame-retardant polymer
*Solder terminal
*Used for lighting fixture, dimmer, etc



MECHANICAL SPECIFICATIONS

Total Rotation angle: 300°±5°
Rotation Torque: 20∽200gf.cm
Shaft Stop strength: 6Kgf.cm
Switch working stroke: (3± 0.5)mm
Switch working force: 50∽300gf.cm
Click position:0/15/27/36/detents
Temperature Range: -20°C ~ 70°C
Mechanical life:10000 cycles
Electrical life:8000 cycles

ELECTRICAL SPECIFICATIONS

Switch Rating:10A250VAC
Switch contact Resistance:30Ω Max.
Rated wattage: Linear taper B 0.2W, other tapers 0.05W
Rated Voltage: 250V
Insulation resistance: 100MΩ Min. at DC500V
Dielectric: AC1500V, 1 minute（between carbon plate and contact）
AC750V, 1 minute（between open contact）
Resistance tolerance:±20%
Rotational noise:≤47mV
Residual resistance: ≤1%R

Dimensions （unit：mm）

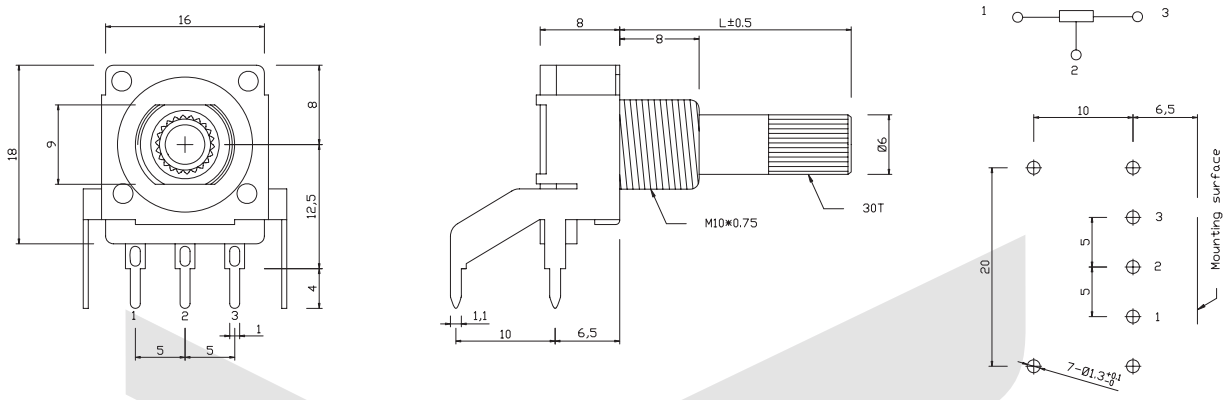

ORDER INFORMATION

Product No.: KLS4-WH0162-2J - L

Pos. No.
Dimmer potentiometer Series
Shaft dimensions

Quartz Crystal Unit Series

KLS14-HC-49S Quartz Crystal Unit Series



Features

- Standard height 3.5mm
- A resistance weld completely sealed type
- Good stability and high reliability
- Copes with high density mounting and is the optimum for mass production

ELECTRICAL SPECIFICATIONS

Nominal frequency: 3.000MHz~100.000MHz
Operating temperature range: Typical: -20ºC~+70ºC
Optional: -10ºC~+60ºC, -40ºC~+85ºC, or specify
Storage temperature range: -40ºC~+85ºC
Frequency tolerance: Typical: ±30ppm at 25ºC, or specify
Freq. Temp characteristics: Typical: ±50ppm over -20ºC~+70ºC, or specify
Load capacitance: 16pF, 20pF, 30pF, series, or specify
Parallel capacitance: 7pF Max
Drive level: 100 μW
Insulation resistance: More than 500MΩ at DC100V
Oscillation mode: See below table
Equivalent series resistance: See below table
Aging:±3ppm at 25ºC per year

EQUIVALENT SERIES RESISTANCE(ESR) AND OSCILLATION MODE

Frequency Range	E.S.R(Ω)	Mode	Frequency Range	E.S.R(Ω)	Mode
3.000MHz~5.999MHz	150	Fundamental/AT	24.000MHz~40.320MHz	30	Fundamental/AT
6.000MHz~7.999MHz	60	Fundamental/AT	24.000MHz~29.999MHz	100	Third Overtone/AT
8.000MHz~15.999MHz	50	Fundamental/AT	30.000MHz~49.999MHz	80	Third Overtone/AT
16.000MHz~30.000MHz	30	Fundamental/AT	50.000MHz~100.000MHz	60	Third Overtone/AT

Dimension (unit: mm)

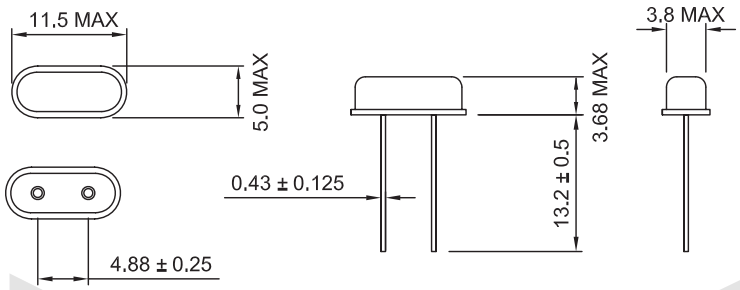

ORDER INFORMATION

KLS14-HC-49S-XXXX - XX - XX-XX

Type:HC-49S
Frequency: e.g. 3.000=3.000MHz
Load Capacitance: e.g. 20=20pF
Operating temperature range:
A: -10ºC~+60ºC
B: -20ºC~+70ºC
C: -40ºC~+85ºC
Frequency Tolerance: e.g. 30=30ppm

Quartz Crystal Unit Series

KLS14-HC-49SMD Quartz Crystal Unit Series

Features

Height 4.0mm, or 3.0mm, compact unit for surface mount
Able to by means of a metal case and completely sealed high solution characteristics
Copes with high density mounting and is the optimum for mass production



ELECTRICAL SPECIFICATIONS

Nominal frequency: 3.000MHz~100.000MHz
Operating temperature range: Typical: -20ºC~+70ºC
Optional: -10ºC~+60ºC, -40ºC~+85ºC, or specify
Storage temperature range: -40ºC~+85ºC
Frequency tolerance: Typical: ±30ppm at 25ºC, or specify
Freq. Temp characteristics: Typical: ±50ppm over -20ºC~+70ºC, or specify
Load capacitance: 16pF, 20pF, 30pF, series, or specify
Parallel capacitance: 7pF Max
Drive level: 100 μW
Insulation resistance: More than 500MΩ at DC100V
Oscillation mode: See below table
Equivalent series resistance: See below table
Aging:±3ppm at 25ºC per year

EQUIVALENT SERIES RESISTANCE(ESR) AND OSCILLATION MODE

Frequency Range	E.S.R(Ω)	Mode	Frequency Range	E.S.R(Ω)	Mode
3.000MHz~5.999MHz	150	Fundamental/AT	24.000MHz~40.320MHz	30	Fundamental/AT
6.000MHz~7.999MHz	60	Fundamental/AT	24.000MHz~29.999MHz	100	Third Overtone/AT
8.000MHz~15.999MHz	50	Fundamental/AT	30.000MHz~49.999MHz	80	Third Overtone/AT
16.000MHz~30.000MHz	30	Fundamental/AT	50.000MHz~100.000MHz	60	Third Overtone/AT

Dimension (unit: mm)

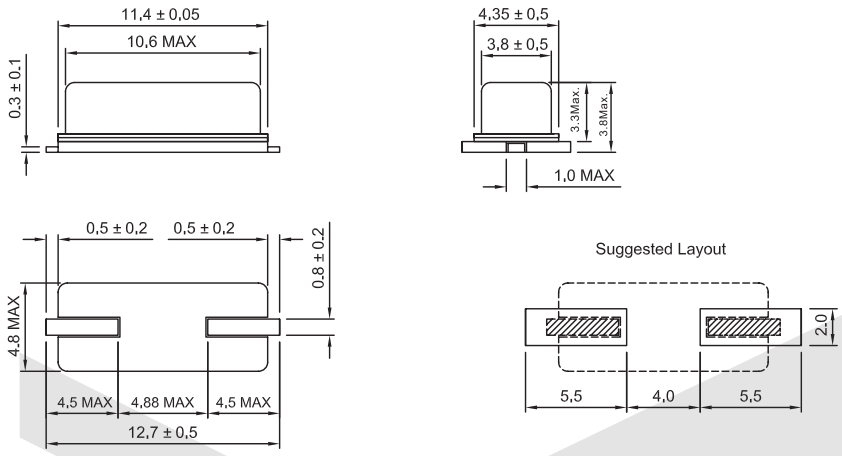

ORDER INFORMATION

KLS14-HC-49SMD-XXXX - XX - XX-XX

Type: HC-49SMD
Frequency:e.g. 3.000=3.000MHz
Load Capacitance: e.g. 20=20pF
Operating temperature range:
A: -10°C ~+60°C
B: -20°C ~+70°C
C: -40°C ~+85°C
Frequency Tolerance: e.g. 30=30ppm

Quartz Crystal Unit Series

KLS14-HC-49U Quartz Crystal Unit Series

Features

Resistance welded type crystal units.
High frequency stability and reliability.
A great number of standard frequencies and wide frequency range.
Higher frequency pullability and lower equivalent series resistance.
Lower cost and highly mass production capacity.
The best choice of TV, STB, LCDM, and Cable Modem.
RoHS Compliant / Pb Free.



ELECTRICAL SPECIFICATIONS

Nominal frequency: HC-49U: 1.8432MHz~125.000MHz
HC-49T: 8.000MHz~200.00MHz
Operating temperature range: Typical: -20ºC~+70ºC
Optional: -10ºC~+60ºC,
-40ºC~+85ºC, or specify
Storage temperature range: -40ºC~+85ºC
Frequency tolerance: Typical: ±30ppm at 25ºC
Optional: ±10~±50ppm at 25ºC
Temperture stability: Typical: ±30ppm over -20ºC~70ºC, or specify
Load capacitance: 16pF, 18pF, 20pF, 30pF, series, or specify
Parallel capacitance: 7pF Max
Drive level: 100 μW
Insulation resistance: More than 500MΩ at DC100V
Oscillation mode: See below table
Equivalent series resistance: See below table
Aging:±5ppm at 25ºC per year

EQUIVALENT SERIES RESISTANCE(ESR) AND OSCILLATION MODE

Frequency Range	E.S.R(Ω)	Mode
1.843MHz~1.999MHz	500	Fundamental
2.000MHz~2.456MHz	450	Fundamental
2.457MHz~2.999MHz	350	Fundamental
3.000MHz~3.999MHz	90	Fundamental
4.000MHz~4.999MHz	70	Fundamental
7.000MHz~7.999MHz	50	Fundamental
8.000MHz~12.999MHz	30	Fundamental
13.999MHz~49.999MHz	25	Fundamental
24.000MHz~49.999MHz	40	Fundamental
50.000MHz~124.999MHz	100	Third Overtone
125.000MHz~149.000MHz	90	Third Overtone
150.000MHz~200.000MHz	150	Seveth Overtone

Units: mm

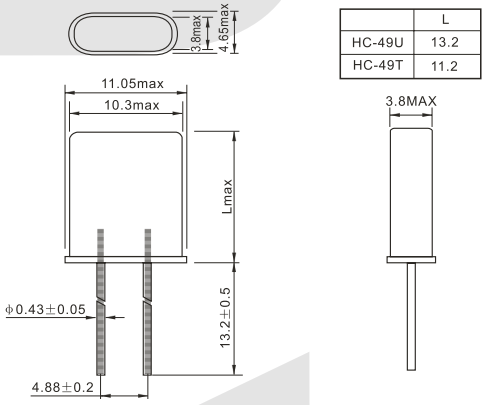

	L
HC-49U	13.2
HC-49T	11.2

ORDER INFORMATION

KLS14-HC-49U-XXXX - XX - XX-XX

Type:HC-49U
HC-49T
Frequency:e.g.
4.000=4.000MHz
Load Capacitance:e.g.
20=20pF
Operating Temperature Range:A:-10ºC~+60ºC
B:-20ºC~+70ºC
C:-40ºC~+85ºC
Frequency Tolerance: e.g.
30=±30ppm

Quartz Crystal Unit Series

KLS14-JU-206&308 Quartz Crystal Unit Series

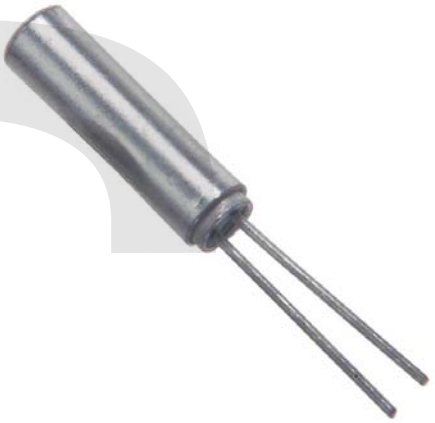

FEATURE
Wide Frequency range
High shock tolerance
Small size
Reliable frequency stability

APPLICATIONS
Microprocessor Systems
Consumer Electronics
Instrumentation
Automotive electronics

ELECTRICAL SPECIFICATIONS
Frequency: 25.600KHz~200.00KHz
Frequency Tolerance (at 25°C): ±20ppm~±100ppm
Turnover Temperature: 25± 5°C
Frequency Temperature Curve: -0.034 (± 0.006) ppm /°C^2
Storage Temperature Range: -40°C~+85°C
Operable Temperature Range: -10°C~+60°C, -20°C~+70°C
Shunt Capacitance: JU-206: 1.35pF
JU-308: 1.8pF
ESR: 25~40KΩ
Load Capacitance: 6.0pF~12.5pF, or specify
Insulation resistance: More than 500MΩ at DC100V
Driver Level: 1 μW Max
Aging @ 25°C 1st year (Max): ± 3ppm/year

DIMENSIONS (unit: mm)

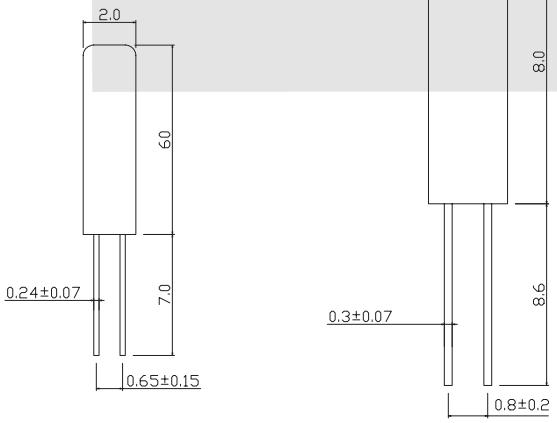

JU206 JU308

Parabolic Temperature Curve

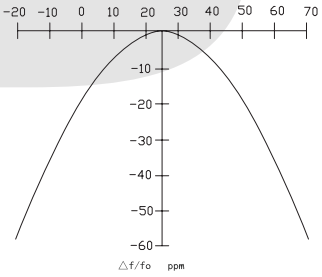

TO determine frequency stability, use parabolic Curve

ORDER INFORMATION

KLS14- JU-206 -XXXX - XX - XX-XX

JU206: 2x6mm
JU308: 3x8mm

Frequency: e.g.
32.768=32.768KHz

Load Capacitance: e.g.
12.5=12.5pF

Operating Temperature Range:
A: -10°C~+60°C
B: -20°C~+70°C
C: -30°C~+85°C

Frequency Tolerance: e.g.
30=±30ppm

Quartz Crystal Unit Series

KLS14-SMD-6F Quartz Crystal Unit 7x5mm Series

FEATURE

Ultra thin, thickness 1.0mm
Leadless type
High precision characteristic covering up to high frequency range
Automatic mounting
Embossed taping specification
Suitable for solder reflow

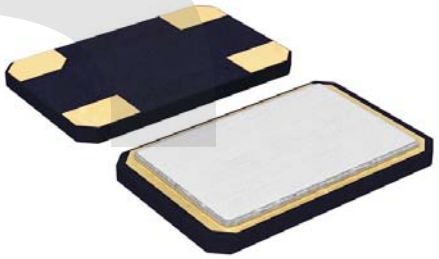

ELECTRICAL SPECIFICATIONS

Output Frequency Range: 8.000 MHz ~ 110.000 MHz
Mode: See table 1
Frequency Tolerance (at 25°C): ± 10ppm ~ ± 50ppm Max
Frequency Stability Over Operating
Temperature Characteristics: -10°C ~ +60°C ± 30ppm,
-20°C ~ +70°C ± 50ppm or specify
Storage Temperature Range: -55°C to +125°C
Operating Temperature Range: -10°C to + 60°C
-40°C to + 85°C
Shunt Capacitance (C_0): 5.0 pF Max
Driver Level (Typical): 10μW ~ 100μW
Load Capacitance (C_L): Series, 16pF, 20pF,
30pF, 32pF, or specify
Equivalent Series Resistance ESR (Ω): See table 1
Aging @ 25°C 1st year (Max): ± 3ppm,
± 5ppm/year
Shock Resistance: Drop test of 3 times on 2mm
stainless plate from 75cm height

REMARK: specifications subject to change without prior notice.
please confirm with our sales engineer.

Frequency and Equivalent Series Resistant

Frequency Range	E.S.R. (Ω)	Mode
6.000 MHz ~ 15.999 Mhz	40 Max	Fundamental / AT
16.000 MHz ~ 32.000 MHz	35 Max	Fundamental / AT
30.000 MHz ~ 44.999 MHz	80 Max	Third Overtone / AT
45.000 MHz ~ 89.999 MHz	70 Max	Third Overtone / AT
90.000 MHz ~ 110.000 MHz	75 Max	Third Overtone / AT

Dimensions (mm)

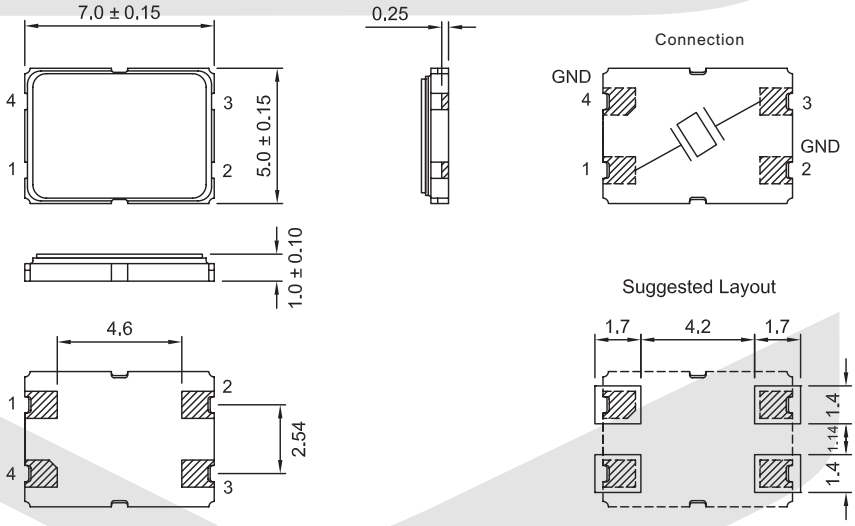

ORDER INFORMATION

KLS14-SMD-6F-XXXX - XX - XX-XX

Part Number
SMD-6F: SMD Quartz Crystal Unit 7x5mm Series
Frequency
Load Capacitance
Frequency Tolerance
Temperature Stability

Quartz Crystal Unit Series

KLS14-SMD-6G Quartz Crystal Unit 6x3. 5mm Series

FEATURE

- Ultra thin, thickness 1.0mm
- Leadless type
- High precision characteristic covering up to high frequency range
- Automatic mounting
- Embossed taping specification
- Suitable for solder reflow

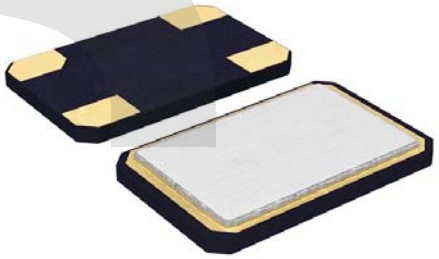

ELECTRICAL SPECIFICATIONS

Output Frequency Range: 6 MHz ~ 100 MHz
Mode: See table 1
Frequency Tolerance (at 25°C): ± 10ppm, ± 20ppm, ± 30ppm, or specify
Frequency Stability Over Operating
Temperature Characteristics: ± 10ppm, ± 20ppm, ± 30ppm, or specify
Storage Temperature Range: -55°C to +125°C
Operating Temperature Range: -10°C to + 60°C
-20°C to + 70°C or specify
Shunt Capacitance (C_0): 3.5 pF Max
Driver Level (Typical): 100μW
Load Capacitance (C_L): Series, 16pF, 20pF,
30pF, 32pF, or specify
Equivalent Series Resistance ESR (Ω): See table 1
Aging @ 25°C 1st year (Max): ± 3ppm,
± 5ppm/year
Shock Resistance: Drop test of 3 times on 2mm
stainless plate from 75cm height

REMARK: specifications subject to change without prior notice.
please confirm with our sales engineer.

Frequency and Equivalent Series Resistant

Frequency Range	Max E.S.R (Ω)	Mode
6.000 MHz ~ 10.000 MHz	70	Fundamental / AT
10.000 MHz ~ 40.000 MHz	40	Fundamental / AT
30.000 MHz ~ 100.000MHz	60	Third Overtone / AT

Dimensions (mm)

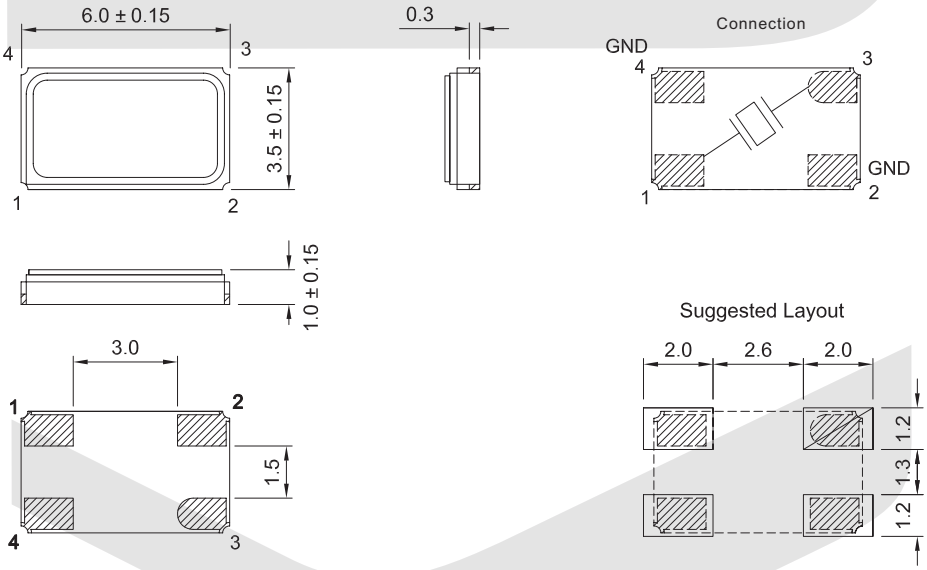

ORDER INFORMATION

KLS14-SMD-6G-XXXX - XX - XX-XX

- Part Number
- SMD-6G: SMD Quartz Crystal Unit 6x3. 5mm Series
- Frequency
- Load Capacitance
- Frequency Tolerance
- Temperature Stability

Quartz Crystal Unit Series

KLS14-SMD-6H Quartz Crystal Unit 8x4.5mm Series

FEATURE

Leadless type.
Automatic mounting.
Rugged AT-cut crystal construction
Suitable for solder reflow.
Available on tape and reel, 1000pcs per reel
Ideally suited designed for disc drives, NB, PCs and hand-held electronic products



ELECTRICAL SPECIFICATIONS

Output Frequency Range: 8.000 MHz ~ 80.000 MHz
Mode: See table 1
Frequency Tolerance (at 25°C): ± 10ppm ~ ± 50ppm, or specify
Frequency Stability Over Operating
Temperature Characteristics: -10°C ~ +60°C ± 30ppm,
-20°C ~ +70°C ± 50ppm or specify
Storage Temperature Range: -55°C to +125°C
Operating Temperature Range: -40°C to + 85°C
Shunt Capacitance (C_0): 5.0 pF Max
Driver Level (Typical): 10μW
Load Capacitance (C_L): Series, 16pF, 20pF, 30pF, 32pF, or specify
Equivalent Series Resistance ESR (Ω): See table 1
Aging @ 25°C 1st year (Max): ± 3ppm, ± 5ppm/year
Shock Resistance: Drop test of 3 times on 2mm stainless plate from 75cm height

REMARK: specifications subject to change without prior notice.
please confirm with our sales engineer.

EQUIVALENT SERIES RESISTANCE (ESR) AND MODE OF OPERATION (MODE)

Frequency Range	E.S.R. (Ω)	Mode
8.000 MHz ~ 10.000 MHz	70 Max	Fundamental / AT
10.000 MHz ~ 40.000 MHz	40 Max	Fundamental / AT
30.000 MHz ~ 45.000 MHz	60 Max	Third Overtone / AT
45.000 MHz ~ 80.000 MHz	50 Max	Third Overtone / AT

Dimensions (mm)

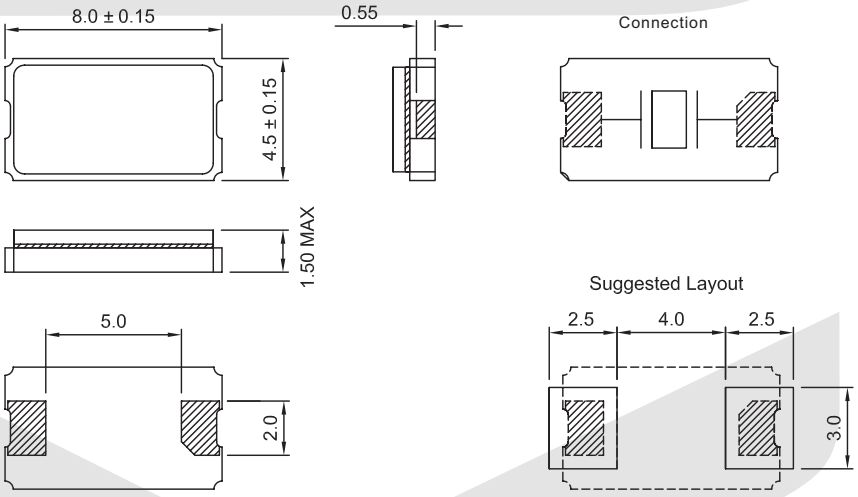

ORDER INFORMATION

KLS14-SMD-6H-XXXX - XX - XX-XX

Part Number
SMD-6H: SMD Quartz Crystal Unit 8x4.5mm Series
Frequency
Load Capacitance
Frequency Tolerance
Temperature Stability

Quartz Crystal Unit Series

KLS14-SMD-6H Quartz Crystal Unit 6x3.5mm Series

FEATURE

Leadless type.
High reliable environmental performance
Designed for automatic mounting and reflow soldering.
Tight tolerance and stability parts are available
Emboss taping specification.
Available on tape & reel, 1000pcs per reel



ELECTRICAL SPECIFICATIONS

Output Frequency Range: 10.000 MHz ~ 80.000 MHz
Mode: See table 1
Frequency Tolerance (at 25°C): ± 30ppm, ± 50ppm, or specify
Frequency Stability Over Operating
Temperature Characteristics: ± 30ppm, ± 50ppm, or specify
Storage Temperature Range: -55°C to +125°C
Operating Temperature Range: -10°C to + 60°C
-20°C to + 70°C
-40°C to + 85°C
Shunt Capacitance (C_0): 5.0 pF Max
Driver Level (Typical): 10μW ~100μW
Load Capacitance (C_L): Series, 16pF, 20pF,
30pF, 32pF, or specify
Equivalent Series Resistance ESR (Ω): See table 1
Aging @ 25°C 1st year (Max): ± 3ppm/year
Shock Resistance: Drop test of 3 times on 2mm
stainless plate from 75cm height

REMARK: specifications subject to change without prior notice.
please confirm with our sales engineer.

EQUIVALENT SERIES RESISTANCE (ESR) AND MODE OF OPERATION (MODE)

Frequency Range	E.S.R. (Ω)	Mode
8.000 MHz ~ 10.000 MHz	70 Max	Fundamental / AT
10.000 MHz ~ 40.000 MHz	40 Max	Fundamental / AT
30.000 MHz ~ 45.000 MHz	60 Max	Third Overtone / AT
45.000 MHz ~ 80.000 MHz	50 Max	Third Overtone / AT

Dimensions (mm)

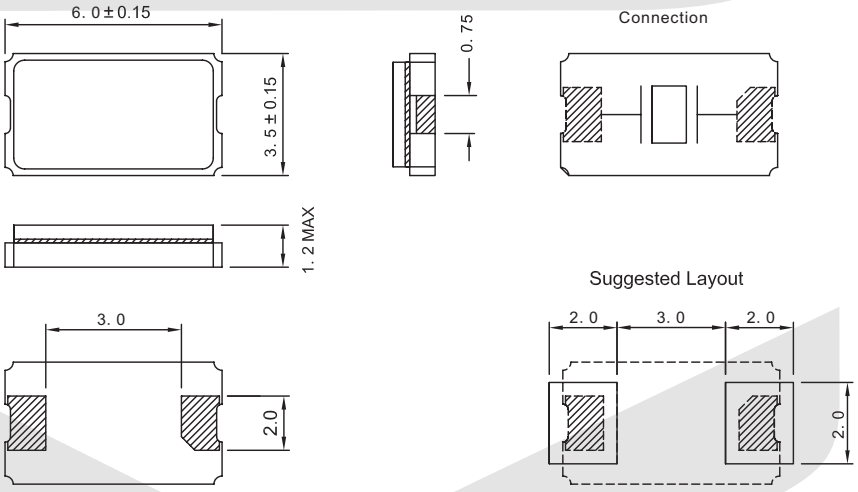

ORDER INFORMATION

KLS14-SMD-6H-XXXX - XX - XX-XX

Part Number
SMD-6H: SMD Quartz Crystal Unit
6x3.5mm Series
Frequency
Temperature Stability
Frequency Tolerance
Load Capacitance

Quartz Crystal Unit Series

KLS14-SMD-6I Quartz Crystal Unit 5x3.2mm Series

FEATURE

- Ultra thin, thickness 1.0mm
- Leadless type
- High precision characteristic covering up to high frequency range
- Automatic mounting
- Embossed taping specification
- Suitable for Reflow soldering
- Ideally suited designed for disc drives, NB, PCs and hand-held electronic products



ELECTRICAL SPECIFICATIONS

Output Frequency Range: 12.000 MHz ~ 40.000 MHz
Mode: See table 1
Frequency Tolerance (at 25°C): ± 30ppm~ ± 50ppm, or specify
Frequency Stability Over Operating
Temperature Characteristics: -10°C ~ +60°C ± 30ppm,
-20°C ~ +70°C ± 50ppm or specify
Storage Temperature Range: -55°C to +125°C
Operating Temperature Range: -40°C to + 85°C
Shunt Capacitance (C_0): 5.0 pF Max
Driver Level (Typical): 10μW ~100μW
Load Capacitance (C_L): Series, 16pF, 20pF, 30pF, 32pF, or specify
Equivalent Series Resistance ESR (Ω): See table 1
Aging @ 25°C 1st year (Max): ± 3ppm, ± 5ppm/year
Shock Resistance: Drop test of 3 times on 2mm stainless plate from 75cm height

REMARK: specifications subject to change without prior notice.
please confirm with our sales engineer.

Frequency and Equivalent Series Resistant

Frequency Range	E.S.R. (Ω)	Mode
12.000 MHz ~ 30.000 MHz	60 Max	Fundamental / AT
30.000 MHz ~ 40.000 MHz	45 Max	Fundamental / AT

Dimensions (mm)

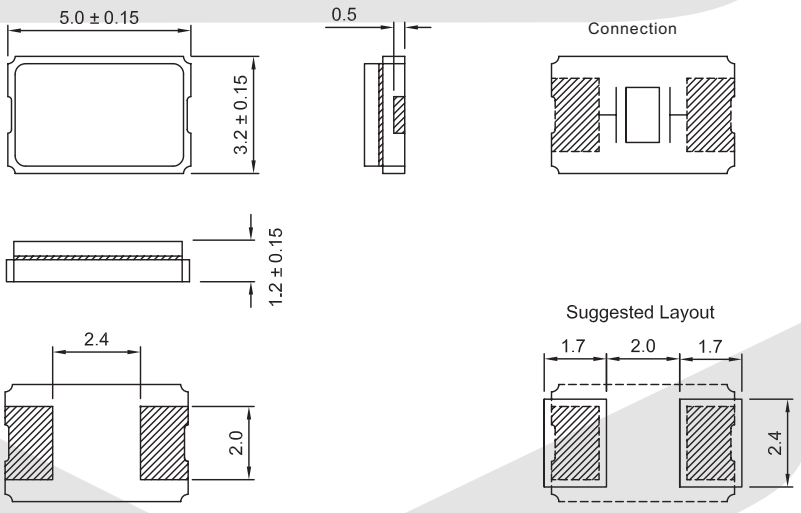

ORDER INFORMATION

KLS14-SMD-6I -XXXX - XX - XX-XX

- Part Number
- SMD-6I: SMD Quartz Crystal Unit 5x3.2mm Series
- Frequency
- Load Capacitance
- Frequency Tolerance
- Temperature Stability

Quartz Crystal Unit Series

KLS14-SMD-6J Quartz Crystal Unit 7x5mm Series

FEATURE

Small SMD type crystal unit
High reliable environmental performance
Automatic mounting
Reasonable cost



ELECTRICAL SPECIFICATIONS

Output Frequency Range: 8.000 MHz ~ 110.000 MHz
Mode: See table 1
Frequency Tolerance (at 25°C): ± 30ppm, ± 50ppm, or specify
Frequency Stability Over Operating
Temperature Characteristics: ± 30ppm, ± 50ppm, or specify
Storage Temperature Range: -55°C to +125°C
Operating Temperature Range: -10°C to + 60°C
-20°C to + 70°C
-40°C to + 85°C
Shunt Capacitance (C_0): 5.0 pF Max
Driver Level (Typical): 10μW ~100μW
Load Capacitance (C_L): Series, 16pF, 20pF,
30pF, 32pF, or specify
Equivalent Series Resistance ESR (Ω): See table 1
Aging @ 25°C 1st year (Max): ± 3ppm, ± 5ppm/year
Shock Resistance: Drop test of 3 times on 2mm
stainless plate from 75cm height

REMARK: specifications subject to change without prior notice.
please confirm with our sales engineer.

EQUIVALENT SERIES RESISTANCE (ESR) AND MODE OF OPERATION (MODE)

Frequency Range	E.S.R. (Ω)	Mode
8.000 MHz ~ 10.000 MHz	70 Max	Fundamental / AT
10.000 MHz ~ 40.000 MHz	40 Max	Fundamental / AT
30.000 MHz ~ 45.000 MHz	60 Max	Third Overtone / AT
45.000 MHz ~ 80.000 MHz	50 Max	Third Overtone / AT

Dimensions (mm)

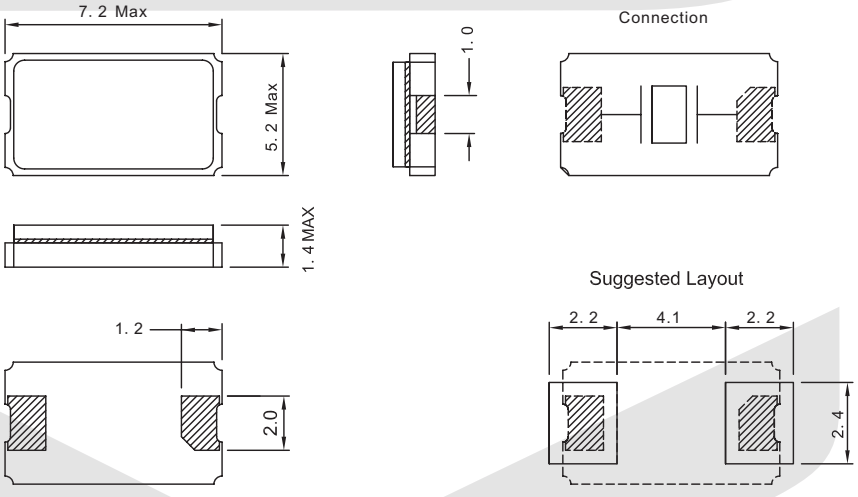

ORDER INFORMATION

KLS14-SMD-6J -XXXX - XX - XX-XX

Part Number
SMD-6J: SMD Quartz Crystal Unit
7x5mm Series
Frequency
Load Capacitance
Frequency Tolerance
Temperature Stability

Quartz Crystal Unit Series

KLS14-SMD-6U Quartz Crystal Unit 3.2x2.5mm Series

FEATURE

4 pads SMD glass sealed crystal.
Applications in wireless communication, DSC and USB interface card.
Excellent heat resistance and environmental characteristics.
Contains Pb in sealing glass exempted by RoHS directive.



ELECTRICAL SPECIFICATIONS

Output Frequency Range: 12.000 MHz ~ 54.000 MHz
Frequency Tolerance (at 25°C): ± 30ppm, or specify
Frequency Stability Over Operating
Temperature Range: ± 30ppm, or specify
Storage Temperature Range: -40°C ~ +85°C
Operating Temperature Range: -10°C ~ + 70°C , or specify
Shunt Capacitance (C_0): 3.0 pF Max
Driver Level (Typical): 1μW ~50μW(10μW typical)
Load Capacitance (C_L): 8 pF, 10 pF, or specify
Aging @ 25°C 1st year (Max): ± 3ppm/year

Equivalent Series Resistance (ESR)

Fundamental	
12MHz~13MHz	150 Ω Max.
13MHz~54MHz	60 Ω Max.

Dimensions (mm)

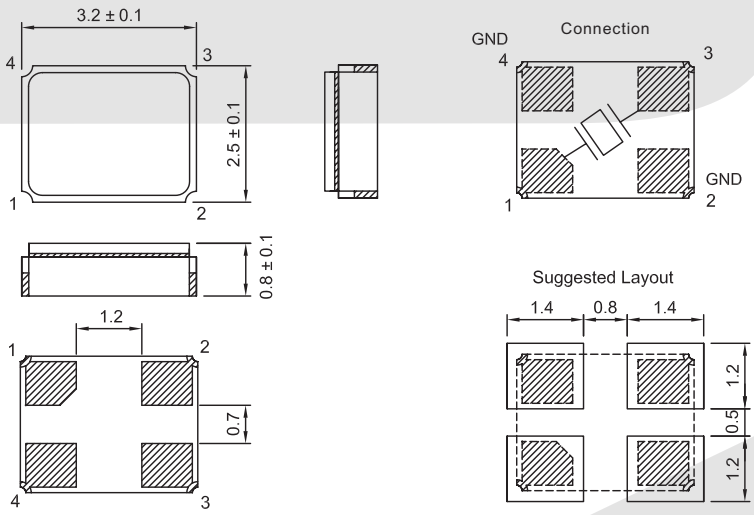

ORDER INFORMATION

KLS14-SMD-6U-XXXX - XX - XX-XX

Part Number
SMD-6U: SMD Quartz Crystal Unit 3.2x2.5mm Series
Frequency
Load Capacitance
Frequency Tolerance
Temperature Stability

Quartz Crystal Unit Series

KLS14-SMD-7I Quartz Crystal Unit 5x3.2mm Series

FEATURE

Ultra thin, thickness 1.0mm
Leadless type
High precision characteristic covering up to high frequency range
Automatic mounting
Embossed taping specification
Suitable for solder reflow

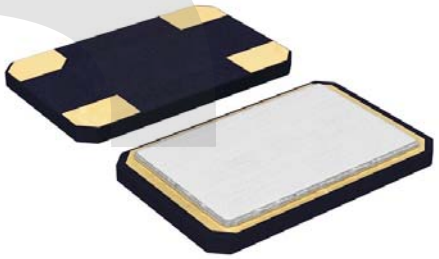

APPLICATIONS

Ideally suited designed for disc drives, NB, PCs and hand-held electronic products

ELECTRICAL SPECIFICATIONS

Output Frequency Range: 12.000 MHz ~ 40.000 MHz
Mode: See table 1
Frequency Tolerance (at 25°C): ± 30ppm ~ ± 50ppm, or specify
Frequency Stability Over Operating
Temperature Characteristics: -10°C ~ +60°C ± 30ppm,
-20°C ~ +70°C ± 50ppm or specify
Storage Temperature Range: -55°C to +125°C
Operating Temperature Range: -40°C to + 85°C
Shunt Capacitance (C_0): 5.0 pF Max
Driver Level (Typical): 10μW ~ 100μW
Load Capacitance (C_L): Series, 16pF, 20pF,
30pF, 32pF, or specify
Equivalent Series Resistance ESR (Ω): See table 1
Aging @ 25°C 1st year (Max): ± 3ppm,
± 5ppm/year
Shock Resistance: Drop test of 3 times on 2mm
stainless plate from 75cm height

REMARK: specifications subject to change without prior notice.
please confirm with our sales engineer.

Frequency and Equivalent Series Resistant

Frequency Range	E.S.R. (Ω)	Mode
12.000 MHz ~ 30.000 MHz	60 Max	Fundamental / AT
30.000 MHz ~ 40.000 MHz	45 Max	Fundamental / AT

Dimensions (mm)

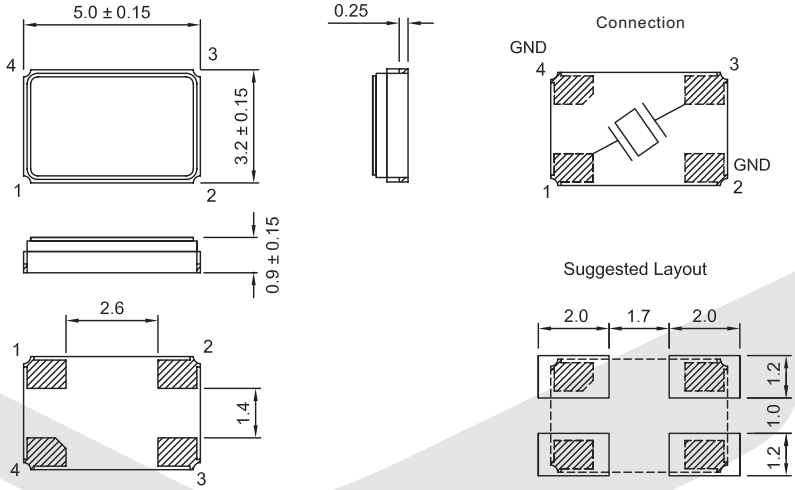

ORDER INFORMATION

KLS14-SMD-7I -XXXX - XX - XX-XX

Part Number
SMD-7I: SMD Quartz Crystal Unit 5x3.2mm Series
Frequency
Load Capacitance
Frequency Tolerance
Temperature Stability

Quartz Crystal Unit Series

KLS14-UM-1/UM-5 Quartz Crystal Unit Series

FEATURE

Precise tolerance and large range of choice of frequency
Stability over temperature offer fitted insulators

Applications

communications, Pagers, Long distance cordless phones,
automotive electronics, telemetry



Dimensions (mm)

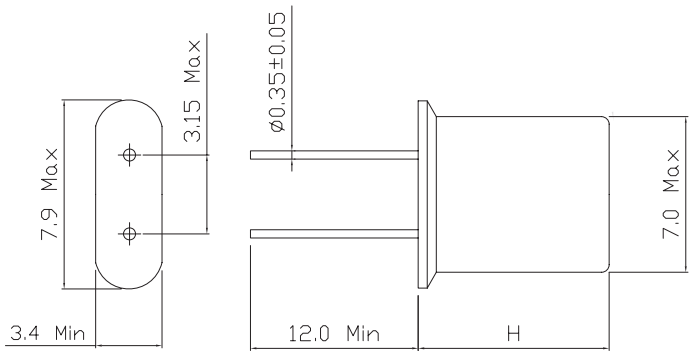

Mode	H
UM-1	8.0Max
UM-5	5.0Max

Electronic Specifications

Partameter	Symb	Units	Typical	Min	Max	Condition
Frequency Range	fo	MHz		10.000	125.000	
Frequency Tolerance	△f/fo	ppm	±30	±10	±50	At 25℃
Temperature Stability	△f/fo	ppm	See Table 1			At 25℃
Operating Temperature Range	T_{OPR}	℃	See Table 1			
Storage Temperature Range	T_{STG}	℃	-55~+125			
Valent Series Resistance	R_1	Ω	Please see the table below			
Shunt Capacitance	C_0	pF			7	
Load Capacitance	C_L	pF	30	10	Series	
Insulator Resistance		MΩ		500		
Drive Level		mW	30		1	DC 100±15V
Aging		ppm		±5.0		
Leak		$2x10^{-8}$CC/Sec Max, Helium				At 25℃ per year

EQUIVALENT SERIES RESISTANCE (ESR) AND OSCILLATION MODE

Frequency Range	Max E.S.R(Ω)	Mode
10.000MHz~12.999MHz	60	Fundamental
13.000MHz~19.999MHz	40	Fundamental
20.000MHz~29.999MHz	30	Fundamental
24.000MHz~39.999MHz	60	Third Overtone
40.000MHz~79.999MHz	50	Third Overtone
80.000MHz~125.000MHz	100	Third Overtone

Table 1: (25℃ Standard)
Frequency Stability VS Temperature Range

Temp Range	FrequencyStability(ppm)					
60	±5	±10	±15	±20	±30	±50
40	±5	±10	±15	±20	±30	±50
30	±5	±10	±15	±20	±30	±50
60		±10	±15	±20	±30	±50
50				±20	±30	±50

ORDER INFORMATION

KLS14- UM-1 -XXXX - XX - XX-XX

Part Number
UM-1: Quartz Crystal Unit H=8mm Max.
UM-5: Quartz Crystal Unit H=5mm Max.
Frequency
Temperature Stability
Frequency Tolerance
Load Capacitance

Quartz Crystal Unit Series

KLS14-SMD-7U Quartz Crystal Unit 3.2x2.5mm Series

FEATURE

Ultra thin, thickness 1.0mm
Leadless type
High precision characteristic covering up to high frequency range
Designed for automatic mounting and reflow soldering
Embossed taping specification
The best choice of Bluetooth wireless communication sets, DSN, PDA and mobile phone

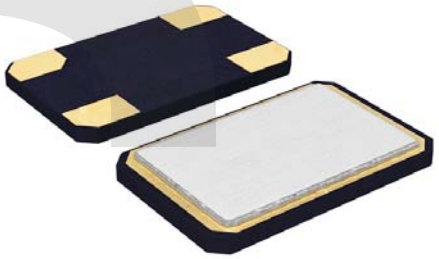

ELECTRICAL SPECIFICATIONS

Output Frequency Range: 12.000 MHz ~ 48.000 MHz
Mode: See table 1
Frequency Tolerance (at 25°C): ± 10ppm, ± 30ppm, or specify
Frequency Stability Over Operating
Temperature Characteristics: ± 10ppm, ± 30ppm, or specify
Storage Temperature Range: -55°C to +125°C
Operating Temperature Range: -10°C to + 60°C
-20°C to + 70°C
-40°C to + 85°C
Shunt Capacitance (C_0): 5.0 pF Max
Driver Level (Typical): 10μW ~ 100μW
Load Capacitance (C_L): Series, 16pF, 20pF, 30pF, 32pF, or specify
Equivalent Series Resistance ESR (Ω): See table 1
Aging @ 25°C 1st year (Max): ± 3ppm/year
Shock Resistance: Drop test of 3 times on 2mm stainless plate from 75cm height

REMARK: specifications subject to change without prior notice.
please confirm with our sales engineer.

Equivalent Series Resistant

FrequencyRange	E.S.R (Ω)	Mode
12 ~ 24MHz	80Ω Max	AT / Fundamental
24 ~ 48MHz	60Ω Max	AT / Fundamental

Dimensions (mm)

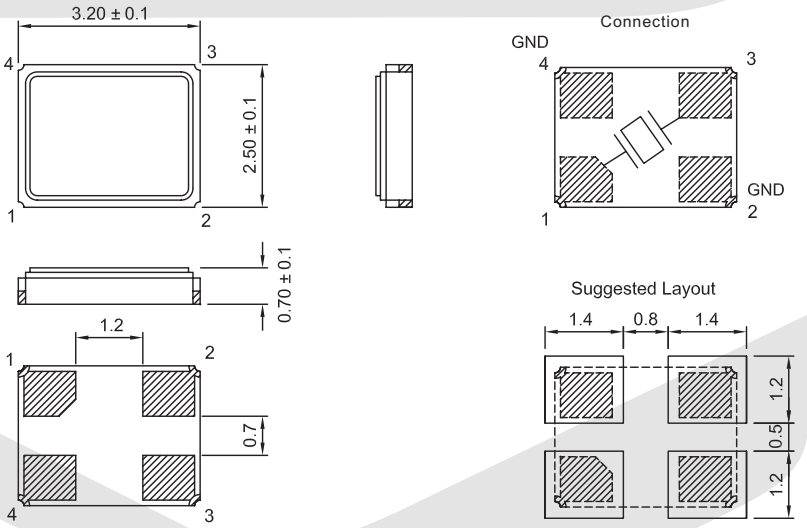

ORDER INFORMATION

KLS14-SMD-7U-XXXX - XX - XX-XX

Part Number
SMD-7U: SMD Quartz Crystal Unit 3.2x2.5mm Series
Frequency
Load Capacitance
Frequency Tolerance
Temperature Stability

Crystal Oscillator Series

KLS14-COS-6M Crystal Oscillator Series

FEATURE
1.All metal welded package
2.Broad frequency range from 0.25Mhz to 180MHz
3.Built-in C-MOS IC with tri-state function
4. 5V and 3.3V supply model available

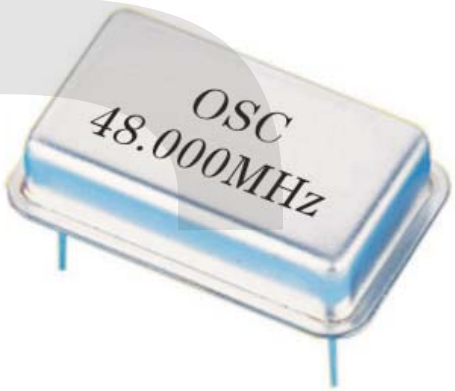

14 Pin(FULL SIZE)

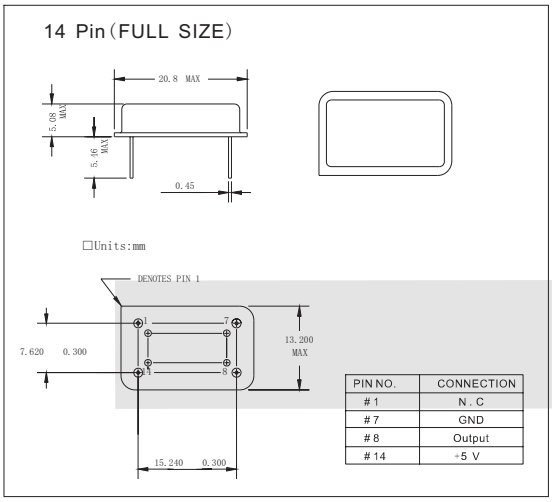

PIN NO.	CONNECTION
#1	N.C
#7	GND
#8	Output
#14	+5 V

8 Pin(HALF SIZE) Units:mm

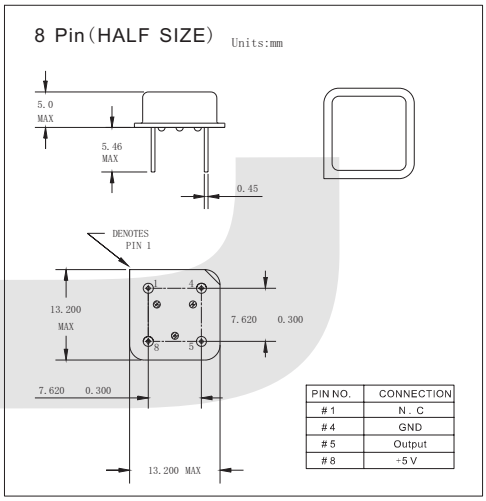

PIN NO.	CONNECTION
#1	N.C
#4	GND
#5	Output
#8	+5 V

ORDER INFORMATION

KLS14 -

6MH	12.000	5	50	X	A
Model type 6MF:Full size.14pin 6MH:Half size.8pin	Frequency 12.000:12.000 MHz	Supply voltage 5:5V 3.3:3.3V	Frequency tolerance 50:±50ppm 25:±25ppm	Fan out type X:TTL/CMOS Y:CMOS X:TTL	Temperature range A:0-70℃ B:-20-70℃ C:-40-85℃

Crystal Oscillator Series

KLS14-COS-6M Crystal Oscillator Series

ELECTRICAL SPECIFICATIONS

Model type		Full Size		Half Size	
Fan Out Type		TTL/CMOS	CMOS	TTL/CMOS	CMOS
Supply Voltage		5.0V	3.3V	5.0V	3.3V
Frequency Range		0.25-180MHz	0.25-180MHz	0.25-180MHz	0.25-180MHz
Operating Temperature		0-70℃,-20-70℃,-40-85℃			
Frequency Range Input Current (Max)	0.25MHz ~9.999MHz	15mA	10mA	15mA	10mA
	10.000MHz~ 23.999MHz	15mA	10mA	15mA	10mA
	24.000MHz ~ 49.999MHz	30ma	20mA	30ma	20mA
	50.000MHz ~ 79.999MHz	40mA	20mA	40mA	20mA
	80.000MHz ~ 180.000MHz	50mA	30mA	50mA	30mA
Frequency Stability	All Conditions	±5ppm ~ ±100ppm			
Symmetry	AT 1/2 Vdd	45/55%			
Input Voltage	Vol(max)	0.4V/0.5V	0.33V	0.4V/0.5V	0.33V
	2.4V/4.5V	3.0V	2.4V/2.5V	3.0V	2.97V
Rise/Fall Time	AT 0.1Vdd~0.9Vdd	5ns max			
Driving Ability	CMOS load max	15pF/50pF	15pF	15pF/50pF	15pF
	TTL load max	10TTL		10TTL	
Start-up Time	Load RANGE	5 ms max(15pF)/ 10 ms (50pF)			
E/D Function	#1 OPEN	PIN #8 OPEN		#5 OPEN	
	#1 >=2.2V	PIN #8 OPEN		#5 OPEN	
	#1 <=0.8V	PIN #8 HIGHZ		#5 HIGHZ	
PAD Connection		PIN#1 E/D	PIN#8 OUT	PIN#1 E/D	PIN#5 OUT
		PIN#7 GND	PIN#14 Vdd	PIN#4 GND	PIN#8 Vdd

CIRCUIT PRINTCIPLE

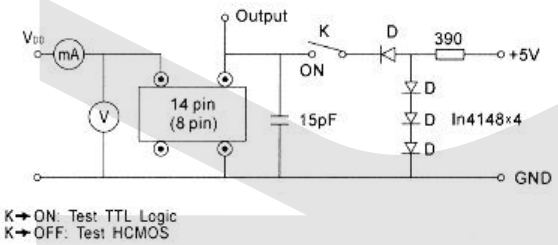

OUTPUT WAVE FORM

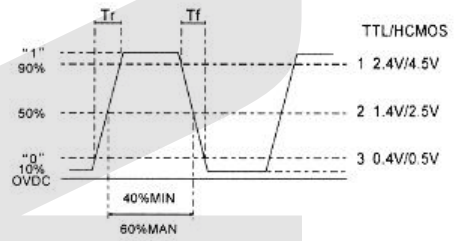

Quartz Crystal Filter Series

KLS14-7DUA-UM-1&UM-5 Quartz Crystal Filter Series

ELECTRICAL SPECIFICATIONS
Center Frequency: 10.7MHZ, 45MHZ
Insertion loss: 2.0dB
Operating temperature: -20°C~+70°C
Fluctuation band: 1.0dB

FEATURE
Low insertion loss
High selectivity
APPLICATIONS
UFH and VHF radio
Pagers
Wireless telemetry
Wireless LAN

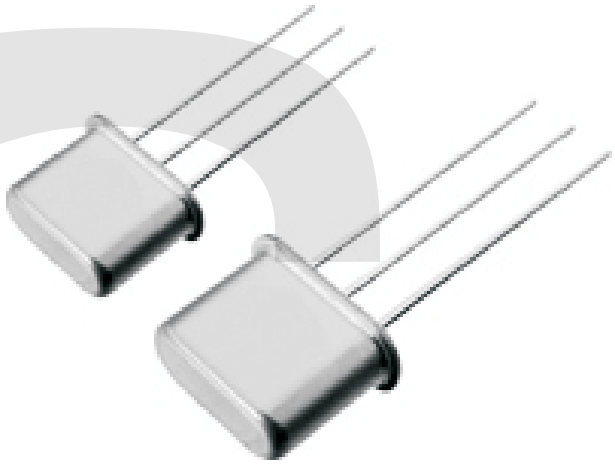

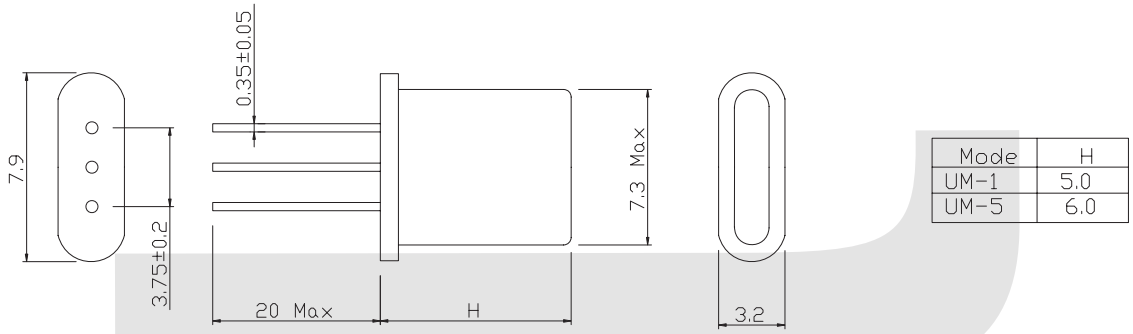

Mode	H
UM-1	5.0
UM-5	6.0

Output Waveform

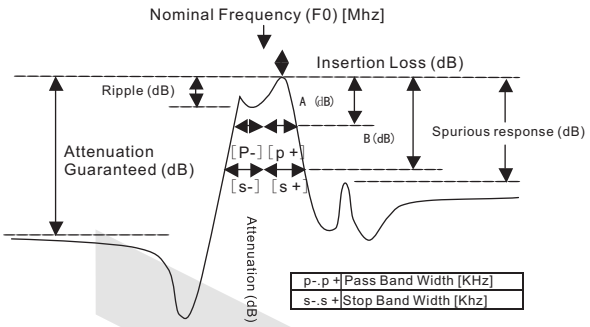

Test Circuit

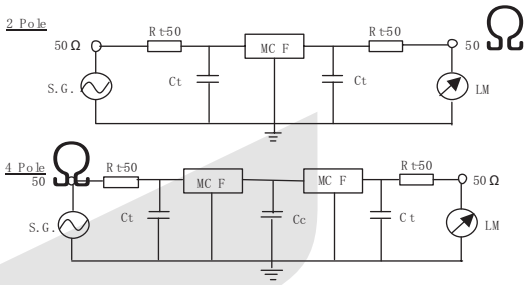

ORDER INFORMATION

KLS14- UM-1 -X X X

Part Number
Crystal Filter Series Package
Frequency
2x (pass band width @ 3dB)
A: 2 poles B: 4 poles

Quartz Crystal Filter Series

KLS14-7DUA-UM-1&UM-5 Quartz Crystal Filter Series

Model	Center Frequency (MHz)	No. of Poles	Pass Band Width at-3db (KHz)	Stop Band Width (KHz/Db)	Ripple (db)	Insertion Loss (Db)	Terminal Impedance (Ω//Pf)	Operating Temp. Range	Case
21M07A	21.4	2	±3.75	±14/18	0.5	1.5	850//7	-20~+70℃	UM-1/5
21M09A	21.4	2	±4.50	±12.5/14	0.5	1.5	850//7	-20~+70℃	UM-1/5
21M12A	21.4	2	±6.00	±20/15	0.5	1.5	1.2K//2.5	-20~+70℃	UM-1/5
21M15A1	21.4	2	±7.50	±25/18	0.5	1.5	1.5K//3	-20~+70℃	UM-1/5
21M15A2	21.4	2	±7.50	±30/18	0.5	2	1.5K//3	-20~+70℃	UM-1/5
21M15A3	21.4	2	±7.50	±30/18	1	2	1.5K//2	-20~+70℃	UM-1/5
21M20A	21.4	2	±10.0	±25/10	0.5	1.5	1.8K//1.5	-20~+70℃	UM-1/5
21M30A	21.4	2	±15.0	±45/15	0.5	1.5	3.0K//0.5	-20~+70℃	UM-1/5
21P07A	21.6	2	±3.75	±14/18	0.5	1.5	850//5	-20~+70℃	UM-1/5
21P12A	21.6	2	±6.00	±20/15	0.5	1.5	1.2k//2.5	-20~+70℃	UM-1/5
21P15A	21.6	2	±7.50	±25/18	0.5	1.5	1.5k//3	-20~+70℃	UM-1/5
21T07A1	21.7	2	±3.75	±14/18	0.5	1.5	850//5	-20~+70℃	UM-1/5
21T07A2	21.7	2	±3.75	±15/18	0.5	1.5	850//6	-20~+70℃	UM-1/5
21T09A	21.7	2	±4.50	±12.5/14	0.5	1.5	1.5k//4	-20~+70℃	UM-1/5
21T12A	21.7	2	±6.00	±20/15	0.5	1.5	1.2k//2.5	-20~+70℃	UM-1/5
21T15A	21.7	2	±7.50	±25/18	0.5	1.5	1.5k//3	-20~+70℃	UM-1/5
21T20A	21.7	2	±10.0	±25/10	0.5	1.5	1.8k//1.5	-20~+70℃	UM-1/5
21T30A	21.7	2	±15.0	±45/15	0.5	1.5	3.0k//0.5	-20~+70℃	UM-1/5
21S07A	21.75	2	±3.75	±25/18	0.5	1.5	1.5k//3	-20~+70℃	UM-1/5
23M07A	23.05	2	±3.75	±12.5/16	0.5	1.5	1.6k/5	-20~+70℃	UM-1/5
23M15A	23.05	2	±7.50	±25/18	0.5	1.5	1.5k//3	-20~+70℃	UM-1/5
30M15A	30.875	2	±7.50	±25/15	0.5	1.5	800//6	-20~+70℃	UM-1/5
45M07A	45	2	±3.75	±12.5/10	0.5	1.5	510//5.5	-20~+70℃	UM-1/5
45M15A	45	2	±7.50	±25/14	0.5	1.5	550//3	-20~+70℃	UM-1/5
45M30A	45	2	±15.0	±50/10	0.5	1.5	510//5.5	-20~+70℃	UM-1/5
21M07B	21.4	4	±3.75	±14/40	1	2	580//5	-20~+70℃	UM-1/5
21M08B	21.4	4	±4.00	±16/40	1	2	1k//4	-20~+70℃	UM-1/5
21M12B	21.4	4	±6.00	±20/40	1	2	1.2k//2.5	-20~+70℃	UM-1/5
21M15B	21.4	4	±7.50	±25/40	1	2	1.5k//2	-20~+70℃	UM-1/5
21M15B2	21.4	4	±7.50	±30/40	1	2	1.5k//2	-20~+70℃	UM-1/5
21M15B3	21.4	4	±7.50	±30/40	1.5	3	1.5k//1	-20~+70℃	UM-1/5
21M30B	21.4	4	±15.0	±50/40	1	2	3.3k//0.5	-20~+70℃	UM-1/5
21P07B	21.6	4	±3.75	±14/40	1	2	850//5	-20~+70℃	UM-1/5
21P12B	21.6	4	±6.00	±20/40	1	2	1.2k//2.5	-20~+70℃	UM-1/5
21P15B	21.6	4	±7.50	±25/40	1	2	1.5k//2	-20~+70℃	UM-1/5
21T07B	21.7	4	±3.75	±14/40	1	2	850//5	-20~+70℃	UM-1/5
21T12B	21.7	4	±6.00	±20/40	1	2	1.2k//2.5	-20~+70℃	UM-1/5
21T15B	21.7	4	±7.50	±25/40	1	2	1.5k//2	-20~+70℃	UM-1/5
21T30B	21.7	4	±15.0	±50/40	1	2	3.3k//0.5	-20~+70℃	UM-1/5
30M15B	30.875	4	±7.5	±25/40	1	2.5	800/4	-20~+70℃	UM-1/5
45M15B	45	4	±7.5	±25/40	1	2.5	650/3	-20~+70℃	UM-1/5
45M30B	45	4	±15.0	±40/30	1	2.5	800/1.5	-20~+70℃	UM-1/5

Quartz Crystal Filter Series

KLS14-7DUA-UM-1SMD & UM-5SMD Quartz Crystal Filter Series

ELECTRICAL SPECIFICATIONS
Center Frequency: 10.7MHZ, 45MHZ
Insertion loss: 2.0dB
Operating temperature: -20°C~+70°C
Fluctuation band: 1.0dB

FEATURE
Low insertion loss
High selectivity
APPLICATIONS
UFH and VHF radio
Pagers
Wireless telemetry
Wireless LAN

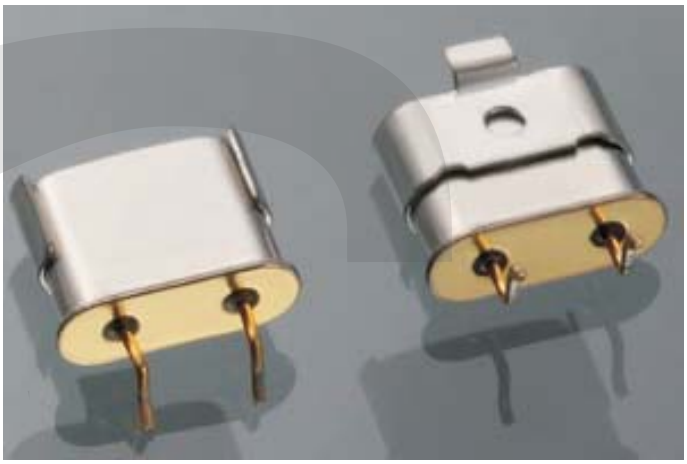

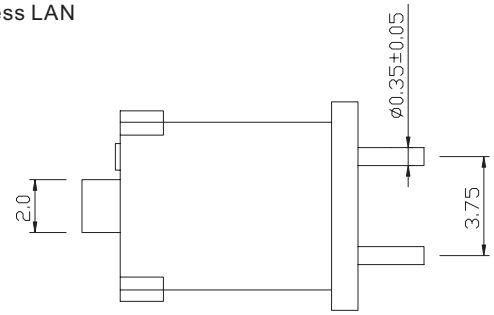

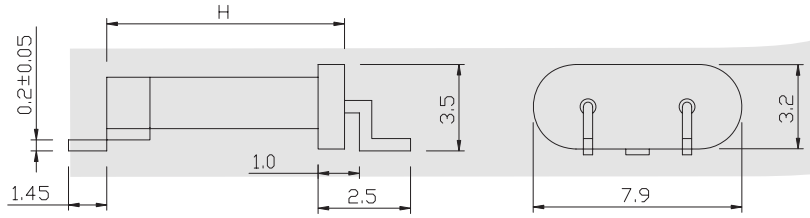

Mode	H
UM-1S	8.0
UM-4S	4.7
UM-5S	6.0

Output Waveform

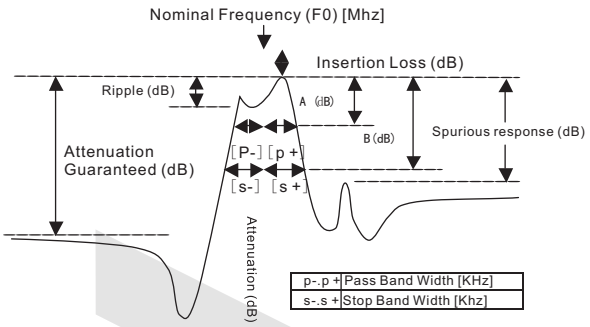

Test Circuit

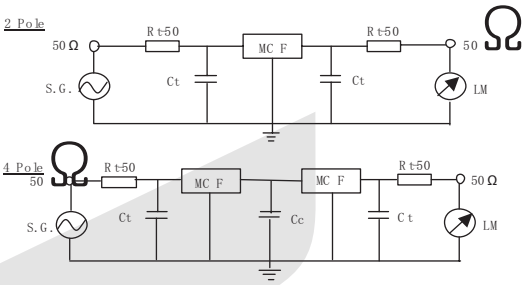

ORDER INFORMATION

KLS14- UM-1S -X X X

Part Number
Crystal Filter Series Package
A: 2 poles B: 4 poles
2x (pass band width @ 3dB)
Frequency

Quartz Crystal Filter Series

KLS14-7DUA-UM-1SMD & UM-5SMD Quartz Crystal Filter Series

Model	Center Frequency (MHz)	No. of Poles	Pass Band Width at-3db (KHz)	Stop Band Width (KHz/Db)	Ripple (db)	Insertion Loss (Db)	Terminal Impedance (Ω//Pf)	Operating Temp. Range	Case
21M07A	21.4	2	±3.75	±14/18	0.5	1.5	850//7	-20~+70℃	UM-1/5S
21M09A	21.4	2	±4.50	±12.5/14	0.5	1.5	850//7	-20~+70℃	UM-1/5S
21M12A	21.4	2	±6.00	±20/15	0.5	1.5	1.2K//2.5	-20~+70℃	UM-1/5S
21M15A1	21.4	2	±7.50	±25/18	0.5	1.5	1.5K//3	-20~+70℃	UM-1/5S
21M15A2	21.4	2	±7.50	±30/18	0.5	2	1.5K//3	-20~+70℃	UM-1/5S
21M15A3	21.4	2	±7.50	±30/18	1	2	1.5K//2	-20~+70℃	UM-1/5S
21M20A	21.4	2	±10.0	±25/10	0.5	1.5	1.8K//1.5	-20~+70℃	UM-1/5S
21M30A	21.4	2	±15.0	±45/15	0.5	1.5	3.0K//0.5	-20~+70℃	UM-1/5S
21P07A	21.6	2	±3.75	±14/18	0.5	1.5	850//5	-20~+70℃	UM-1/5S
21P12A	21.6	2	±6.00	±20/15	0.5	1.5	1.2k//2.5	-20~+70℃	UM-1/5S
21P15A	21.6	2	±7.50	±25/18	0.5	1.5	1.5k//3	-20~+70℃	UM-1/5S
21T07A1	21.7	2	±3.75	±14/18	0.5	1.5	850//5	-20~+70℃	UM-1/5S
21T07A2	21.7	2	±3.75	±15/18	0.5	1.5	850//6	-20~+70℃	UM-1/5S
21T09A	21.7	2	±4.50	±12.5/14	0.5	1.5	1.5k//4	-20~+70℃	UM-1/5S
21T12A	21.7	2	±6.00	±20/15	0.5	1.5	1.2k//2.5	-20~+70℃	UM-1/5S
21T15A	21.7	2	±7.50	±25/18	0.5	1.5	1.5k//3	-20~+70℃	UM-1/5S
21T20A	21.7	2	±10.0	±25/10	0.5	1.5	1.8k//1.5	-20~+70℃	UM-1/5S
21T30A	21.7	2	±15.0	±45/15	0.5	1.5	3.0k//0.5	-20~+70℃	UM-1/5S
21S07A	21.75	2	±3.75	±25/18	0.5	1.5	1.5k//3	-20~+70℃	UM-1/5S
23M07A	23.05	2	±3.75	±12.5/16	0.5	1.5	1.6k/5	-20~+70℃	UM-1/5S
23M15A	23.05	2	±7.50	±25/18	0.5	1.5	1.5k//3	-20~+70℃	UM-1/5S
30M15A	30.875	2	±7.50	±25/15	0.5	1.5	800//6	-20~+70℃	UM-1/5S
45M07A	45	2	±3.75	±12.5/10	0.5	1.5	510//5.5	-20~+70℃	UM-1/5S
45M15A	45	2	±7.50	±25/14	0.5	1.5	550//3	-20~+70℃	UM-1/5S
45M30A	45	2	±15.0	±50/10	0.5	1.5	510//5.5	-20~+70℃	UM-1/5S
21M07B	21.4	4	±3.75	±14/40	1	2	580//5	-20~+70℃	UM-1/5S
21M08B	21.4	4	±4.00	±16/40	1	2	1k//4	-20~+70℃	UM-1/5S
21M12B	21.4	4	±6.00	±20/40	1	2	1.2k//2.5	-20~+70℃	UM-1/5S
21M15B	21.4	4	±7.50	±25/40	1	2	1.5k//2	-20~+70℃	UM-1/5S
21M15B2	21.4	4	±7.50	±30/40	1	2	1.5k//2	-20~+70℃	UM-1/5S
21M15B3	21.4	4	±7.50	±30/40	1.5	3	1.5k//1	-20~+70℃	UM-1/5S
21M30B	21.4	4	±15.0	±50/40	1	2	3.3k//0.5	-20~+70℃	UM-1/5S
21P07B	21.6	4	±3.75	±14/40	1	2	850//5	-20~+70℃	UM-1/5S
21P12B	21.6	4	±6.00	±20/40	1	2	1.2k//2.5	-20~+70℃	UM-1/5S
21P15B	21.6	4	±7.50	±25/40	1	2	1.5k//2	-20~+70℃	UM-1/5S
21T07B	21.7	4	±3.75	±14/40	1	2	850//5	-20~+70℃	UM-1/5S
21T12B	21.7	4	±6.00	±20/40	1	2	1.2k//2.5	-20~+70℃	UM-1/5S
21T15B	21.7	4	±7.50	±25/40	1	2	1.5k//2	-20~+70℃	UM-1/5S
21T30B	21.7	4	±15.0	±50/40	1	2	3.3k//0.5	-20~+70℃	UM-1/5S
30M15B	30.875	4	±7.5	±25/40	1	2.5	800/4	-20~+70℃	UM-1/5S
45M15B	45	4	±7.5	±25/40	1	2.5	650/3	-20~+70℃	UM-1/5S
45M30B	45	4	±15.0	±40/30	1	2.5	800/1.5	-20~+70℃	UM-1/5S

Quartz Crystal Filter Series

KLS14-7DKU-HC-49T Quartz Crystal Filter Series

Quartz Crystal FEATURES:

- Industry Standard Package
- Wide Frequency range
- Tight Tolerances
- Excellent reliability / Aging
- "AT" cut crystals
- Cost effective
- RoHs / Lead Free compliant

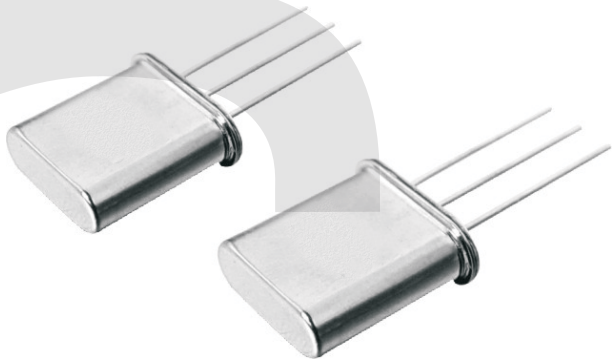

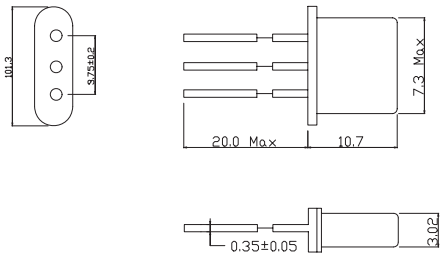

HC-49T 2 Pole (Fund;10MHz~15Mhz)

Model	Nominal Frequency	Pass Band Width		Stop Band Width		Ripple	Insertion Loss	Terminal Impedance	Operating Temp Range
	[MHz]	[dB]	[KHz]	[dB]	[KHz]	[dB]	[dB]	Rt//Ct[Ω/pF]	[℃]
10M07A	10.700	3	±3.75	20	±18.00	0.5	2.0	1800//5	-20~+70
10M12A	10.700	3	±6.00	18	±20.00	0.5	2.0	3000//3	-20~+70
10M15A	10.700	3	±7.50	18	±25.00	0.5	2.0	3000//2	-20~+70
10M30A	10.700	3	±15.00	18	±50.00	0.5	2.0	5500//-1	-20~+70

Model	Nominal Frequency	Pass Band Width		Stop Band Width		Ripple	Insertion Loss	Terminal Impedance	Operating Temp Range
	[MHz]	[dB]	[KHz]	[dB]	[KHz]	[dB]	[dB]	Rt//Ct//Cc[Ω/pF//pF]	[℃]
10M07B	10.700	3	±3.75	40	±14.00	1.0	2.5	1800//4//12	-20~+70
10M12B	10.700	3	±6.00	40	±20.00	1.0	2.5	2800//1.5//7	-20~+70
10M15B	10.700	3	±7.50	40	±25.00	1.0	2.5	3000//1//5	-20~+70
10M30B	10.700	3	±15.00	40	±50.00	1.0	2.5	5500//-1//0	-20~+70

ORDER INFORMATION

KLS14- 7DKU-HC-49T - 10M07A

Pos. No.
Part Number
Model

Ceramic Resonator Series

KLS14-ZTA Ceramic Resonator Series

Resonators ZTA (MHz) series cover the frequency range of 1.79 Mhz to 60.00 MHz with an initial frequency tolerance fo±0.5%.

Since the ZTA series utilizes the thickness mode of vibration of the piezoelectric element, there is little dimensional change with frequency. All ZTA are epoxy coated and completely washable. Tape and reel package are both available.



Ceramic ZTA (MHz) Resonator Dimensions

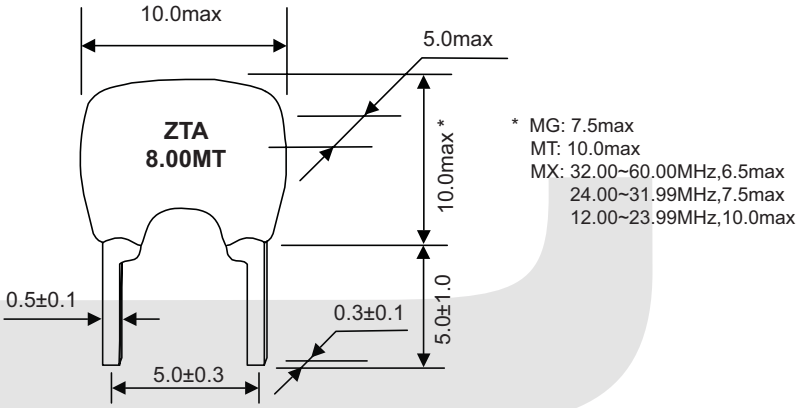

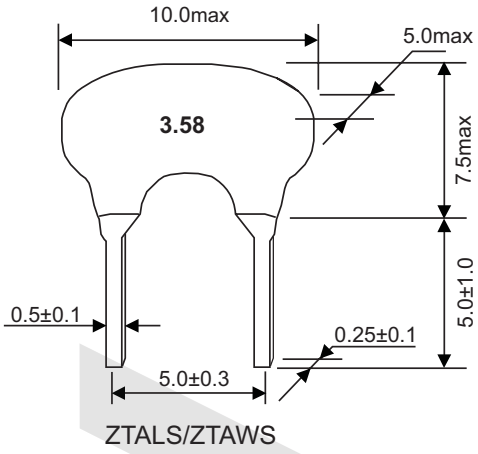

ZTALS/ZTAWS

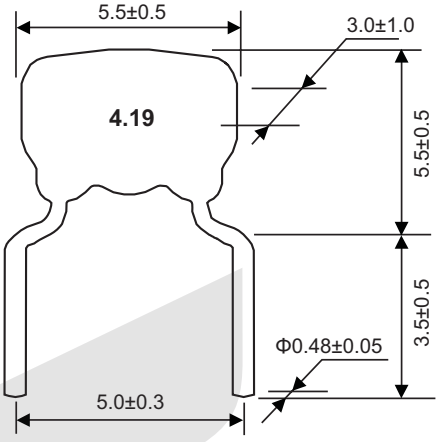

ZTARS

ORDER INFORMATION

KLS14- ZTA x. xx MT

Pos. No.
Part Number

Ceramic Resonator Series

KLS14-ZTA Ceramic Resonator Series

ZTA (MHz) Compatible to Murata CSA **1.79 - 60.00 MHz**

Ceramic ZTA (MHz) Resonators Technical Characteristics

Part Number	Frequency Range(MHz)	Frequency Accuracy(at 25°C) (%)	Stability in Temperature (-20°C ~ +80°C) (%)	Operating Temperature(°C)	Aging For Ten Years (%)
ZTA***MG	1.79 ~ 6.00	± 0.5	± 0.3	-20 ~ +80	± 0.3
ZTAWS***MG	1.79 ~ 6.00	± 0.5	± 0.3	-20 ~ +80	± 0.3
ZTALS***MG	3.00 ~ 8.00	± 0.5	± 0.3	-20 ~ +80	± 0.3
ZTARS***MG	3.00 ~ 10.00	± 0.5	± 0.3	-20 ~ +80	± 0.3
ZTA***MT	6.00 ~ 13.00	± 0.5	± 0.3	-20 ~ +80	± 0.3
ZTA***MX	12.00 ~ 60.00	± 0.5	± 0.3	-20 ~ +80	± 0.3

Ceramic ZTA (MHz) Resonator Test Circuit for MOS IC

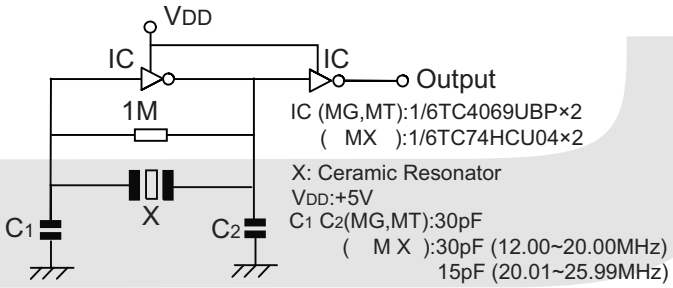

IC (MG,MT):1/6TC4069UBP×2
(MX):1/6TC74HCU04×2

X: Ceramic Resonator
VDD:+5V
C1 C2(MG,MT):30pF
(M X):30pF (12.00~20.00MHz)
15pF (20.01~25.99MHz)
5pF (26.00~60.00MHz)

ORDER INFORMATION

KLS14- ZTA x. xx MT

Pos. No.
Part Number

Ceramic Resonator Series

KLS14-ZTB Ceramic Resonator Series

Resonator ZTB (kHz) Series is designed to provide the design engineer with a rugged, relatively low frequency device in the frequency range of 190 kHz to 1,250 kHz. Initial frequency tolerance is ± 0.5% which compares very favorably to the norminal ± 2% ~ ± 3% requirements of one chip microprocessors.

ZTB series utilizes the area vibration mode of the piezoelectric element.

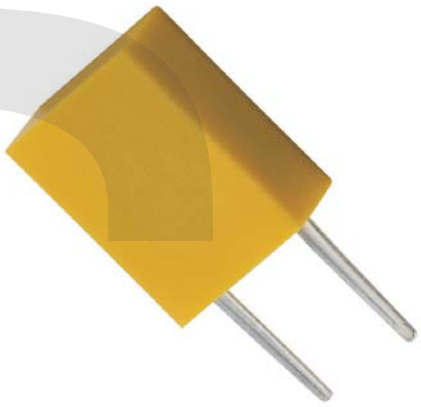

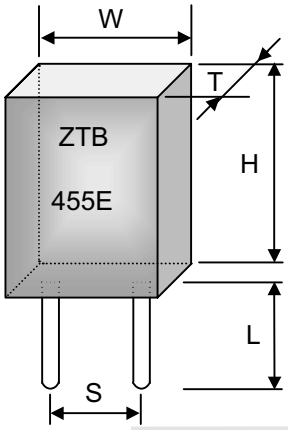

ZTB (kHz) Resonator Dimensions (Unit: mm Tolerance: ±0.3mm)

FrequencyRange (kHz)	W width	T thickness	H height	S lead space	L lead length
190~249	13.5	3.6	14.7	10.0	8.0
250~374	11.0	3.6	12.2	7.7	7.0
375~429	7.9	3.6	9.3	5.0	6.0
430~699	7.0	3.5	9.0	5.0	4.0(6.0)
700~1250	5.1	2.2	6.3	2.5	4.0

ZTB (kHz) Compatible to Murata CSB **190 - 1250 kHz**

Ceramic ZTB (kHz) Resonators Technical Characteristics

Part Number	Frequency Accuracy (at 25°C)	Resonant Impedance ( )	Stability in Temperature (-20°C~+80°C)(%)	Aging For 10 Years (%)	Load Capacitance (pF)	
					C1	C2
ZTB82 ~ ZTB189 *	±2kHz	≤20	±0.3	±0.3	/	/
ZTB190D ~ ZTB249D	±1kHz	≤20	±0.3	±0.3	330	470
ZTB250D ~ ZTB374D	±1kHz	≤20	±0.3	±0.3	220	470
ZTB375P ~ ZTB429P	±2kHz	≤20	±0.3	±0.3	120	470
ZTB430E ~ ZTB509E	±2kHz	≤20	±0.3	±0.3	100	100
ZTB510P ~ ZTB699P	±2kHz	≤30	±0.3	±0.3	100	100
ZTB700J ~ ZTB999J	±0.5%	≤70	±0.3	±0.3	100	100
ZTB1000J ~ ZTB1250J	±0.5%	≤100	±0.3	±0.3	100	100

* ZTB82 ~ ZTB189 series is new products of custom design.

ORDER INFORMATION

KLS14- ZTB455E

Pos. No.
Part Number

Ceramic Resonator Series

KLS14-ZTB Ceramic Resonator Series

ZTB (kHz) Resonator Test Circuit

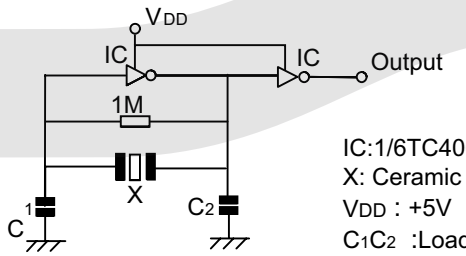

IC:1/6TC4069UBP×2
X: Ceramic Resonator
V_{DD} : +5V
C_1C_2 :Load Capacitance

ORDER INFORMATION

KLS14- ZTB455E

Pos. No.
Part Number

Ceramic Resonator Series

KLS14-ZTT Ceramic Resonator Series

Ceramic ZTT Resonators feature a built-in load capacitance. This feature eliminates any need for external loading capacitors and reduces component count, increases reliability and reduces size. These unit are offered in the frequency range from 1.79 MHz to 60.00 MHz with an initial frequency tolerance of ± 0.5%.

ZTB series utilizes the area vibration mode of the piezoelectric element.



Ceramic ZTT Resonator Dimensions (Unit:mm)

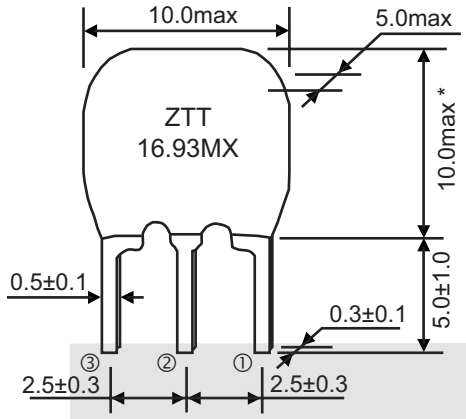

* MG: 8.0max
MT: 10.0max
MX: 13.01~60.00MHz,10.0max
12.00~13.00MHz,12.0max

① Input
② Ground
③ Output

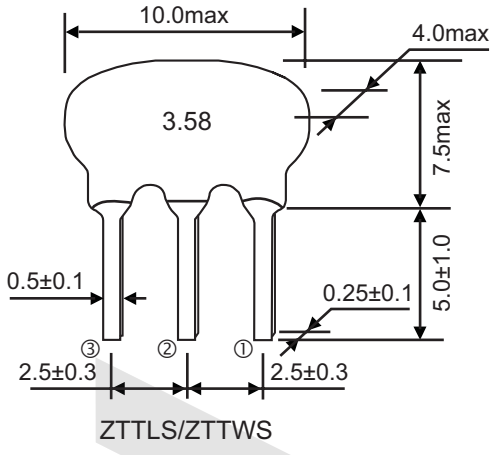

ZTTLS/ZTTWS

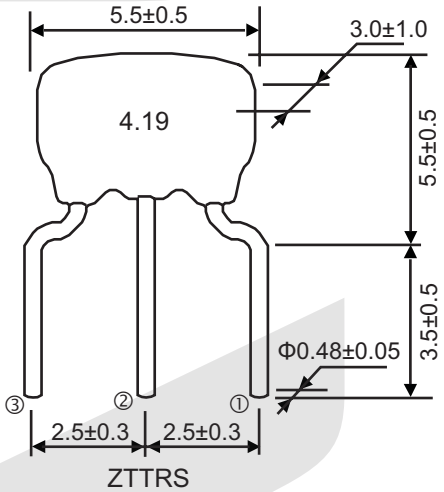

ZTTRS

ORDER INFORMATION

KLS14- ZTT16. 93MX

Pos. No.
Part Number

Ceramic Resonator Series

KLS14-ZTT Ceramic Resonator Series

ZTT With Built-in Capacitor (Compatible to Murata CST) **1.79 - 60.00MHz**

Ceramic ZTT (MHz) Resonators Technical Characteristics

Part Number	Frequency Range (MHz)	Frequency Accuracy (at 25°C) (%)	Stability in Temperature (-20°C ~ +80°C) (%)	Operating Temperature (°C)	Aging For Ten Years (%)
ZTT***MG	1.79 ~ 6.00	±0.5	±0.3	-20 ~ +80	±0.3
ZTTWS***MG	1.79 ~ 6.00	±0.5	±0.3	-20 ~ +80	±0.3
ZTTLS***MG	3.00 ~ 8.00	±0.5	±0.3	-20 ~ +80	±0.3
ZTTRS***MG	3.00 ~ 10.00	±0.5	±0.3	-20 ~ +80	±0.3
ZTT***MT	6.00 ~ 13.00	±0.5	±0.3	-20 ~ +80	±0.3
ZTT***MX	12.00 ~ 60.00	±0.5	±0.3	-20 ~ +80	±0.3

Ceramic ZTT Resonator Test Circuit for MOS IC

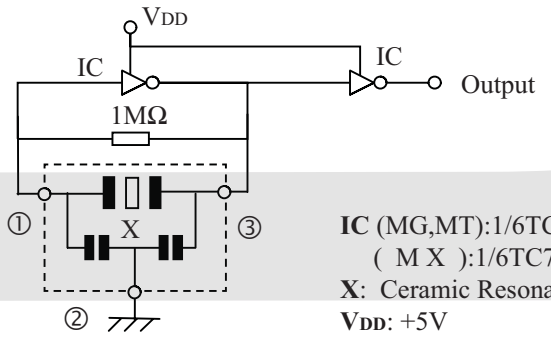

IC (MG,MT):1/6TC4069UBP×2
(M X):1/6TC74HCU04×2
X: Ceramic Resonator
VDD: +5V

ORDER INFORMATION

KLS14- ZTT16. 93MX

Pos. No.
Part Number

Ceramic Resonator Series

KLS14-CRB Ceramic Resonator Series

Specifications:
1) Model: CRB509E
2) Frequency precision: ±2kHz
3) Resonance impedance: ≥20Ω
4) Temperature stability (-20 ~ 80oC): ±0.3
5) Aging rate (10 years): ±0.3%
6) Load capacitance:
a) C1: 100PF
b) C2: 100PF
7) Dimensions:
a) Width: 7.0mm
b) Thickness: 3.5mm
c) Height: 9.0mm
d) Pitch: 5.0mm
e) Junction length: 6.0mm

Inner packing: 200pcs/bag, 400pcs/box
Outer packing: 50 boxes/carton
Carton dimension: 38 x 21 x 29cm

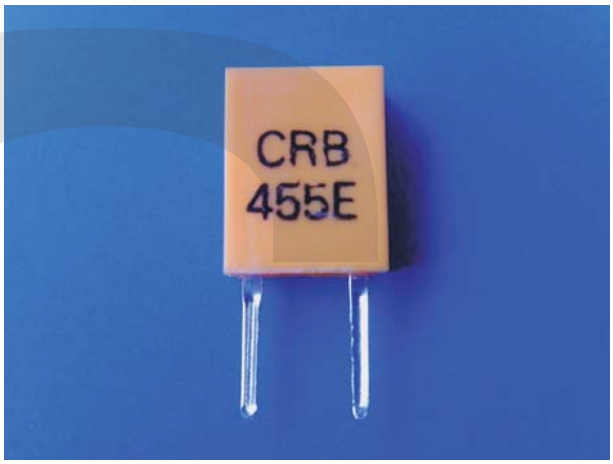

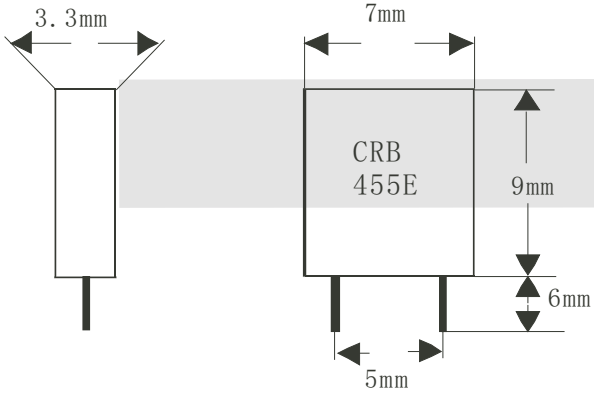

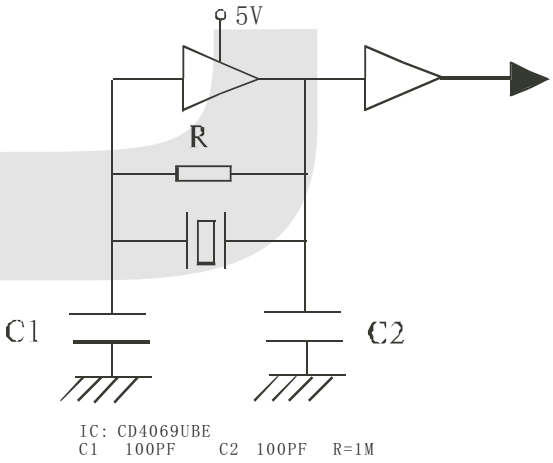

ORDER INFORMATION

KLS14- CRB455E

Pos. No.
Part Number

Ceramic Filter Series

KLS14-LT4. 5 Ceramic Filter Series

Ceramic LT MB Filters are a high selectivity filter for 2 channel multi-sound TV. Features with frequency adjustment-free, high performance and durability, and high selectivity.

Ceramic LT MB Filters Dimensions

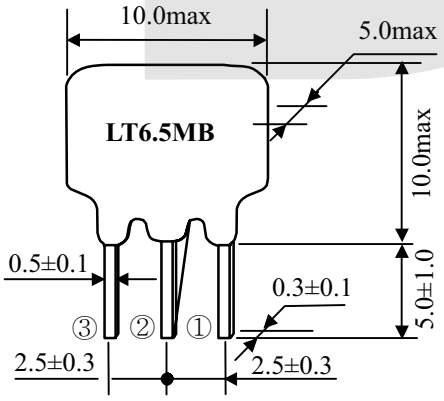

① Input
② Ground
③ Output



Ceramic LT MB Filters Technical Characteristics

Part Number	Nominal Center Frquency (fo) (MHz)	3dB Band Width (kHz) min	20dB Band Width (kHz) max	Insert Loss (dB) max	Spurious Attenuation (dB) min	Input/Output Impedance ( )
LT4.5MB	4.500	fo±60	530	6.0	20($4.5^{+0.8}_{-1.0}$ MHz)	1000
LT5.5MB	5.500	fo±75	550	6.0	25(5.5±1MHz)	600
LT6.0MB	6.000	fo±80	600	6.0	25(6.0±1MHz)	470
LT6.5MB	6.500	fo±80	630	6.0	25(6.5+1MHz) 30(6.5-1MHz)	470

LT MB Filter Test Circuit

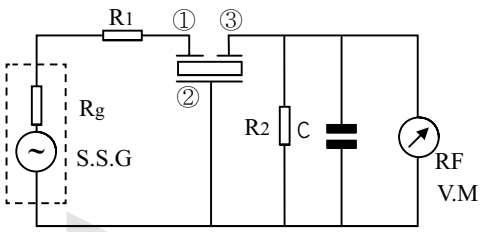

Rg+R1=R2=Input/Output Impedance C=10pF
Including stray capacitance and input capacitance of RF voltmeter

LT MB Filter Characteristics

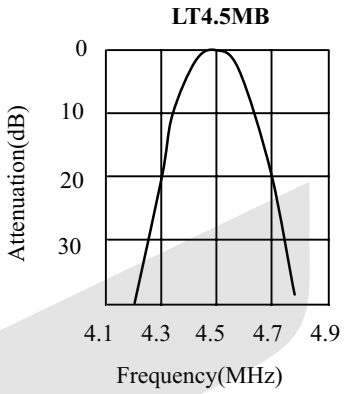

ORDER INFORMATION

KLS14-LT4. 5MB

Pos. No.
Part Number

Ceramic Filter Series

KLS14-LT10. 7 Ceramic Filter Series

Ceramic LT10.7 Filter is monolithic devices which utilize the energy-trapped thickness vibration-mode. This principle of operation is based upon the fact that an excellent resonating element with low spurious vibration can be obtained by adhering to certain theoretical parameters of design.



These parameters include the physical dimensions of the ceramic element, the electrode pattern, and the associated mass loading effect of the electrodes. In addition to employing the principle of energy-trapped thickness shear vibration-mode, Token China also utilizes the theory of the multicoupling mode. In short, this theory utilizes divided electrodes to "trap" different frequencies simultaneously.

The advantages of Token China's multicoupling mode technology is a highly selective, integrated device that allows a single piezo substrate to contain a number of coupled resonators.

Token China categorizes the LT 10.7 family according to rank of center frequency. This ranking indicates that a given LT 10.7 will be marked with one of the colors listed in the following chart and will exhibit the center frequency characteristics specified below.

LT10.7M Filter Dimensions

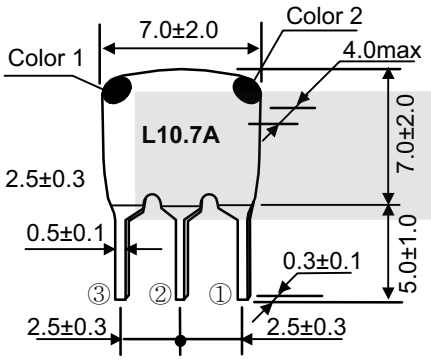

① Input
② Ground
③ Output

Color 1:A5,S2,JA10
Color 2:S3,HY

LT10.7M Filter Test Circuit

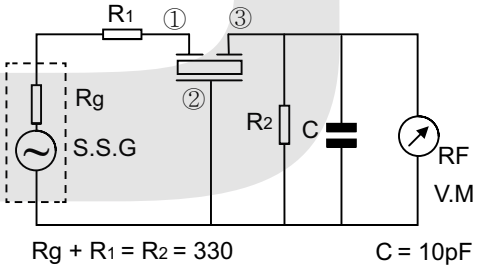

Rg + R1 = R2 = 330 C = 10pF

Including stray capacitance and input capacitance of RF voltmeter

LT10.7M Filter Standard Marking Color

Center Frequency	Color
D:10.64MHz±30kHz	Black
B:10.67MHz±30kHz	Blue
A:10.70MHz±30kHz	Red
C:10.73MHz±30kHz	Orange
E:10.76MHz±30kHz	White

ORDER INFORMATION

KLS14- LT10.7MA5 - A P

Pos. No.
Part Number
Packaging
Center Frequency color code

Ceramic Filter Series

KLS14-LT10. 7 Ceramic Filter Series

LT10.7M Series For FM Receiver(Murata SFE10M7 FM-IF Series Compatible) 10.7MHz

Ceramic LT10.7M Series Technical Characteristics

Part Number	3dB Band Width (kHz)	20dB Band Width (kHz) max	Insertion Loss (dB) max	Spurious Attenuation (9-12MHz)(dB)min
LT10.7MA5	280±50	650	6	30
LT10.7MS2	230±50	600	6	40
LT10.7MS3	180±40	520	7	40

• Input/Ouput Impedance:330

LT10.7M A10 Series Low - Loss Type(Murata SFE10M7 A10 Series Compatible) 10.7MHz

Ceramic LT10.7M A10 Series Technical Characteristics

PartNumber	3dB Band Width(kHz)	20dB Band Width(kHz) max	Insertion Loss(dB)	Spurious Attenuation (9-12MHz)(dB)min
LT10.7MA5A10	280±50	590	2.5±2.0	30
LT10.7MS2A10	230±50	520	3.0±2.0	35
LT10.7MS3A10	180±40	470	3.5±1.5	35
LT10.7MJA10	150±40	360	4.5±2.0	35

• Input/Ouput Impedance:330

Wide/Narrow Band-width LT10.7M Series(Murata SFE10M7 DBS Receiver Compatible) 10.7MHz

Ceramic LT10.7M Series Technical Characteristics

Part Number	3dB Band Width (kHz)	20dB Band Width (kHz) max	Insertion Loss (dB)	Spurious Attenuation (9-12MHz)(dB)min
LT10.7MA19	350min	950	3.0±2.0	20
LT10.7MA20	330±50	680	4.0±2.0	30
LT10.7MHY	110±30	350	7.0±2.0	30
LT10.7MFP	20min	95	6.0max	24(10.7±1.0MHz)

• Input/Ouput Impedance:470 (MA19),330 (MA20,MHY),600 (MFP)

LT10.7M Filter Characteristics

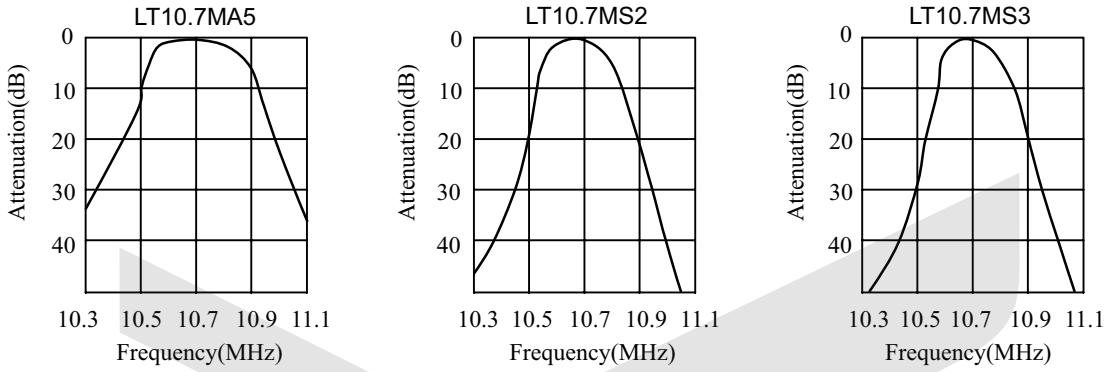

ORDER INFORMATION

KLS14- LT10.7MA5 - A P

Pos. No.
Part Number
Packaging
Center Frequency color code

Ceramic Filter Series

KLS14-LT455 / 450 Ceramic Filter Series

Ceramic LT 455/450 U / W Filters are 4-element and 6-element devices connected in ladder form. These highly selective filter is designed to address the GDT characteristics required in digital communications.

The excellent GDT characteristics allow these filters to be utilized in areas such as the mobile cellular markets as well as a variety of stereo applications.
(Also available in 450kHz version.)

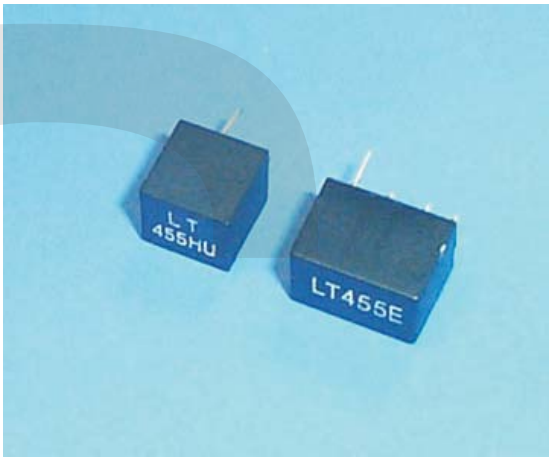

Ceramic LT 455/450 U/W Filter Dimensions

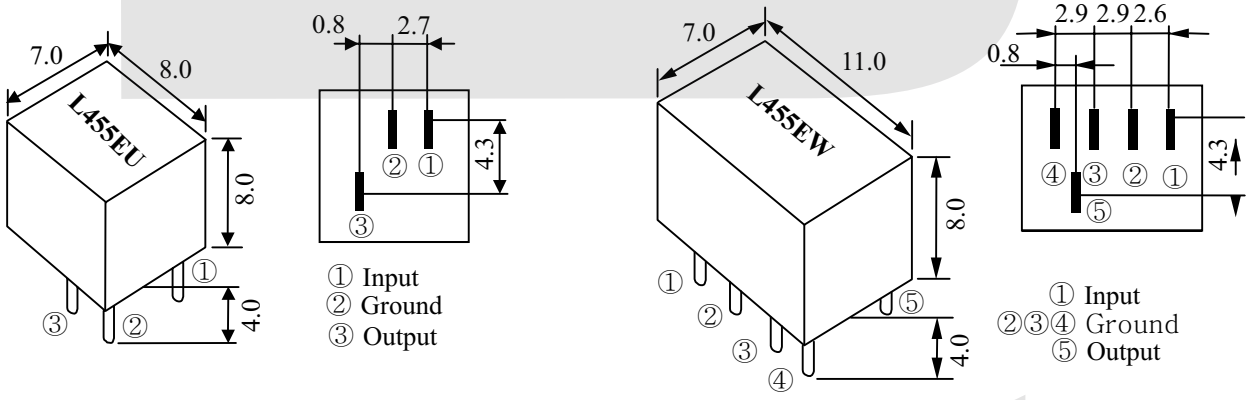

ORDER INFORMATION

KLS14-LT455-EW

Pos. No.
Part Number

Ceramic Filter Series

KLS14-LT455 Ceramic Filter Series

LT 455/450 U/W for Communication (Murata CF, SF series Compatible) **455/ 450 kHz**

Ceramic LT 455/450 U/W Filters Technical Characteristics

Part Number		Center Frequency (kHz)	Insertion Loss (dB) max	Pass Band Ripple (dB) max	6dB Band Width (kHz) min	40dB Band Width (kHz) max (LT455 U)	50dB Band Width (kHz) max (LT455 W)	Spurious Attenuation fo±100kHz (dB) min		Input / Output Impedance ( )
								(LT455 U)	(LT455 W)	
LT455AU	LT455AW	455±2.0	4	2	±17.5	±40	±35	28	40	1000
LT455BU	LT455BW	455±2.0	4	2	±15	±30	±30	28	40	1500
LT455CU	LT455CW	455±2.0	4	2	±12.5	±24	±24	28	40	1500
LT455DU	LT455DW	455±1.5	4	2	±10	±20	±20	28	40	1500
LT455EU	LT455EW	455±1.5	6	2	±7.5	±15	±15	28	40	1500
LT455FU	LT455FW	455±1.5	6	2	±6	±12.5	±12.5	28	40	2000
LT455GU	LT455GW	455±1.5	6	2	±4.5	±10	±10	28	40	2000
LT455HU	LT455HW	455±1.0	6	2	±3	±9	±9	28	40	2000
LT455IU	LT455IW	455±1.0	6	2	±2	±7.5	±7.5	28	40	2000
LT455HTU	LT455HTW	455±1.0	6	2	±3	±9	±9	35	60	2000

● Center frequency 450kHz is also available.

Ceramic LT 455/450 U/W Filter Test Circuit

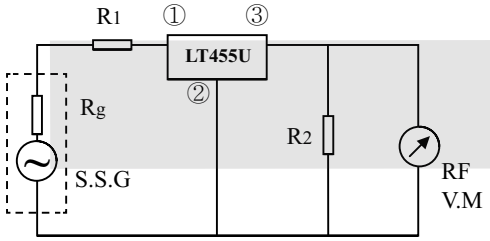

Rg+ R1= R2=Input/Output Impedance

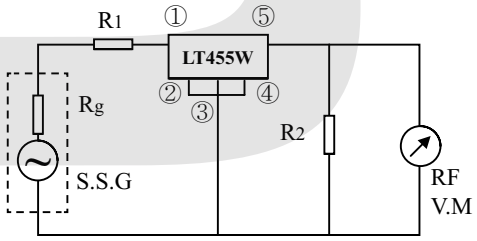

Rg+ R1= R2=Input/Output Impedance

Ceramic LT 455/450 U/W Filter Characteristics

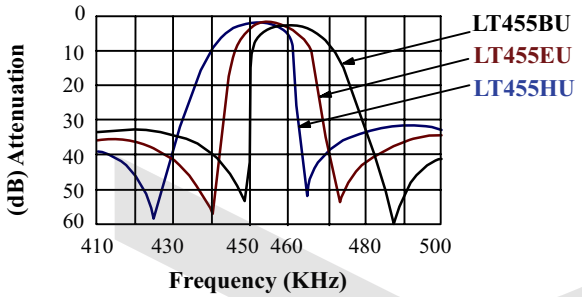

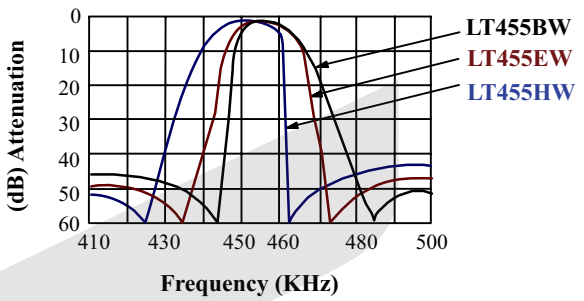

ORDER INFORMATION

KLS14-LT455-EW

Pos. No.
Part Number

Ceramic Filter Series

KLS14-LTC455 Ceramic Filter Series

LTC455/450 U / W series for IFcomprises small, high performance thin (4.0mm) filters consisting of 4 ceramic elements. Their innovative construction is perfect for shrinking mobile communication products such as pocket pagers and cellular phones.

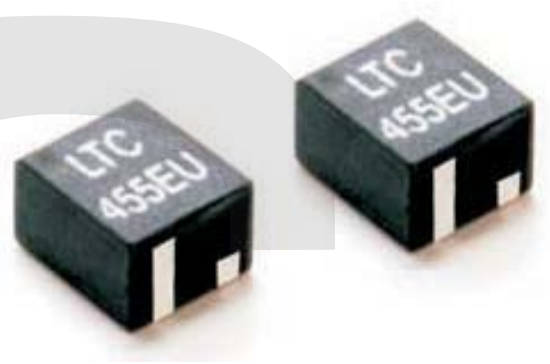

Features

1. The filters are mountable by automatic placers.
2. The filters can be reflow soldered and withstand washing.
3. They are slim, at only 4.0mm max. Thickness, and have a small mounting area enabling flexible PCB design.
4. The bandwidth ranges from D to G.
5. Operating temperature range: -20 ° Cto +80° C
Storage temperature range: -40° C to +85° C

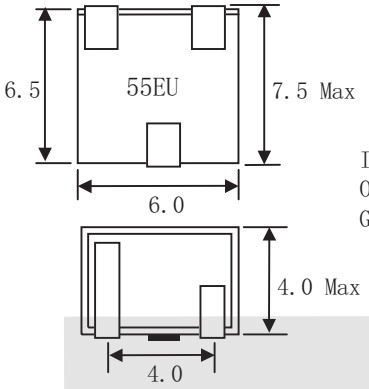

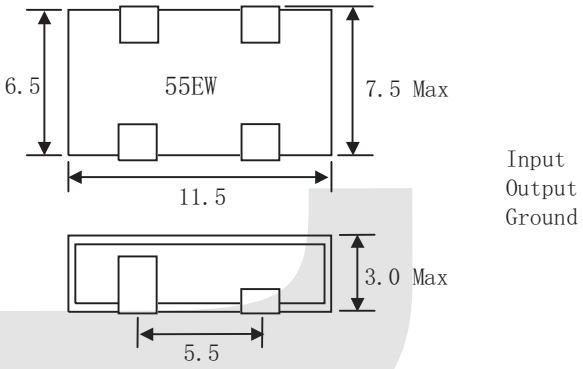

Principal Parameters

TECHNICAL CHARACTERISTICS											
Part Number		Center Frequency (fo) (kHz)	Insertion Loss (dB) max		Pass Band Ripple (dB) max	6dB Band Width (kHz) min	40dB Band Width (kHz) min	50dB Band Width (kHz) min	Spurious Attenuation fo±100kHz (dB) min		Input / Output Impedance (Ω)
			LTC 455U	LTC 455W			LTC 455U	LTC 455W	LTC 455U	LTC 455W	
LTC455BU	LTC455BW	455±1.5	4	4	2	±15.0	±30	±30	27	50	1000
LTC455CU	LTC455CW	455±1.5	4	4	2	±12.5	±25	±25	27	50	1000
LTC455DU	LTC455DW	455±1.5	4	4	2	±10.0	±20	±20	27	50	1500
LTC455EU	LTC455EW	455±1.5	6	4	2	±7.5	±15	±15	27	50	1500
LTC455FU	LTC455FW	455±1.5	6	6	2	±6.0	±12	±12	27	47	1500
LTC455GU	LTC455GW	455±1.5	6	6	2	±4.5	±10	±10	25	47	1500
LTC455HU	LTC455HW	455±1.5	6	6	2	±3.0	±9.0	±9.0	25	47	1500
LTC455IU	LTC455IW	455±1.5	6	6	2	±2.0	±7.5	±7.5	25	47	1500

＊Center frequency 450kHz is also available.

ORDER INFORMATION

KLS14-LTC455-EW

Pos. No.
Part Number

Ceramic Filter Series

KLS14-LTC455 Ceramic Filter Series

LTC455 U TEST CIRCUIT

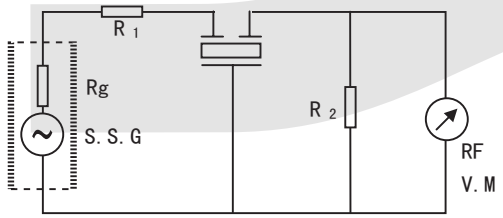

Rg + R_1 = R_2 = Input/Output Impedance

LTC455 W TEST CIRCUIT

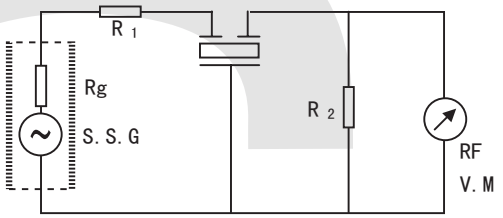

Rg + R_1 = R_2 = Input/Output Impedance

LTC455 U CHARACTERISTICS

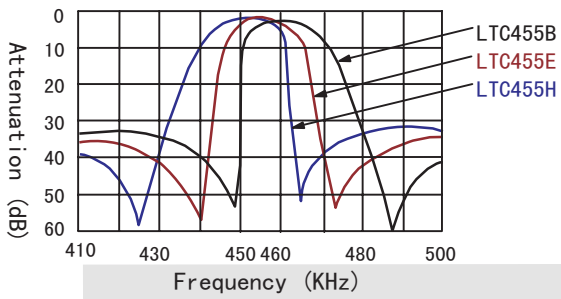

LTC455 W CHARACTERISTICS

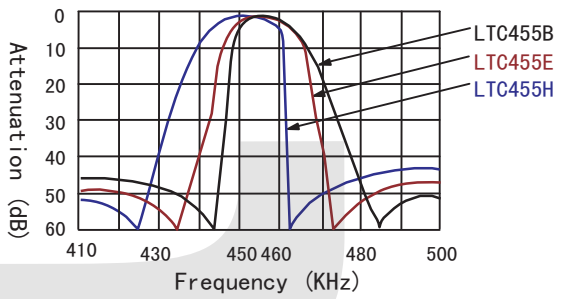

ORDER INFORMATION

KLS14-LTC455-EW

Pos. No.
Part Number

Ceramic Filter Series

KLS14-LTM455 / 450 Ceramic Filter Series

These compact, highly selective characteristics are recommended for use in applications ranging from two-way radio to auxiliary filters in high class transceivers.These ultra-miniature versions consume approximately 40% less volume while still offering the same high performance characteristics.

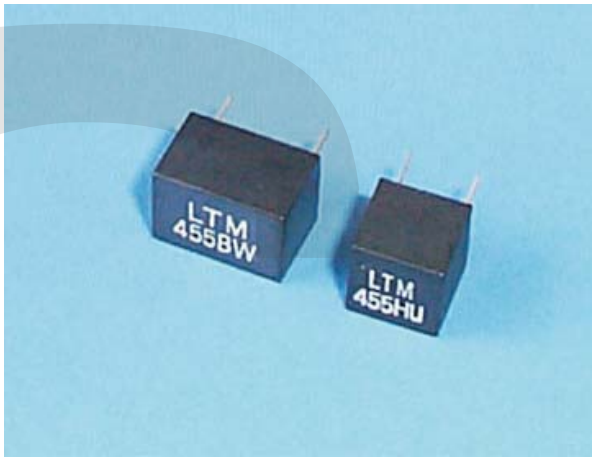

Ceramic LTM 455/450 U/W Filter Dimensions

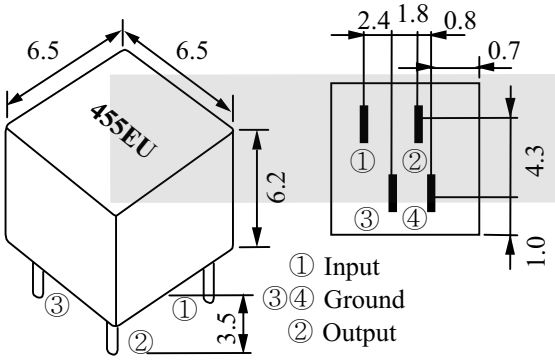

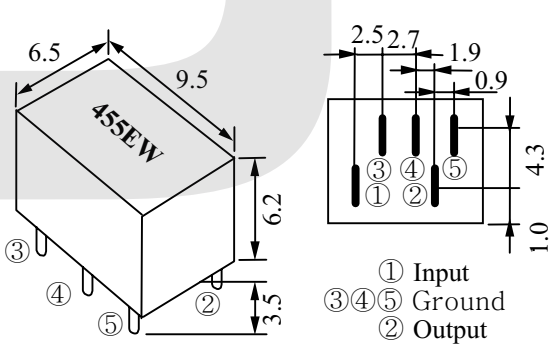

ORDER INFORMATION

KLS14-LTM455-EW

Pos. No.
Part Number

Ceramic Filter Series

KLS14-LTM455 Ceramic Filter Series

LTM 455/450 U/W for Communication(Murata CFUM/WM 455/450 Compatible) 455 kHz / 450 kHz

LTM 455/450 U/W Filters Technical Characteristics

Part Number		Center Frequency (kHz)	Insertion Loss (dB) max	Pass Band Ripple (dB) max	6dB Band Width (kHz) min	40dB Band Width (kHz) max LTM455 U	50dB Band Width (kHz) max LTM455 W	Spurious Attenuation fo±100kHz (dB) min		Input / Output Impedance (□)
								(LTM 455 U)	(LTM 455 W)	
LTM455AU	LTM455AW	455±2.0	4	2	±17.5	±40	±35	28	40	1000
LTM455BU	LTM455BW	455±2.0	4	2	±15	±30	±30	28	40	1500
LTM455CU	LTM455CW	455±2.0	4	2	±12.5	±24	±24	28	40	1500
LTM455DU	LTM455DW	455±1.5	4	2	±10	±20	±20	28	40	1500
LTM455EU	LTM455EW	455±1.5	6	2	±7.5	±15	±15	28	40	1500
LTM455FU	LTM455FW	455±1.5	6	2	±6	±12.5	±12.5	28	40	2000
LTM455GU	LTM455GW	455±1.5	6	2	±4.5	±10	±10	28	40	2000
LTM455HU	LTM455HW	455±1.0	6	2	±3	±9	±9	28	40	2000
LTM455IU	LTM455IW	455±1.0	6	2	±2	±7.5	±7.5	28	40	2000
LT M455HTU	LT M455HTW	455±1.0	6	2	±3	±9	±9	35	60	2000

• Center frequency 450KHz is also available.

Ceramic LTM 455/450 U/W Filter Test Circuit

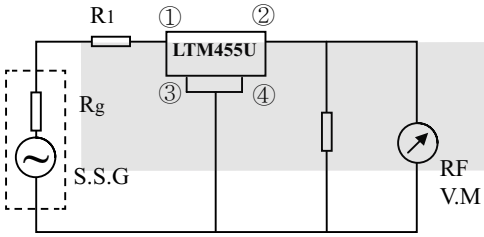

Rg+ R1= R2=Input/Output Impedance

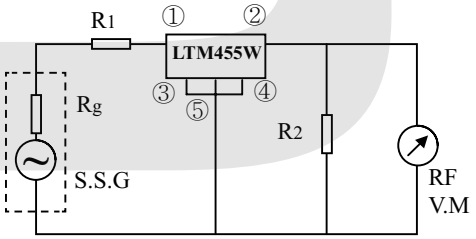

Rg+ R1= R2=Input/Output Impedance

Ceramic LTM 455/450 U/W Filter Characteristics

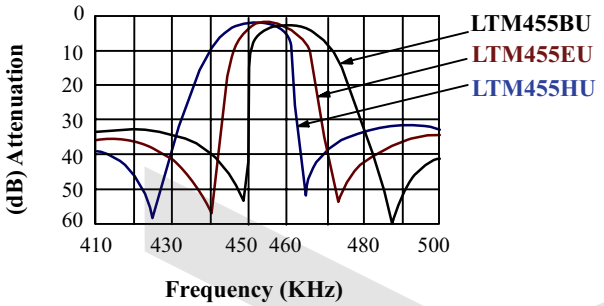

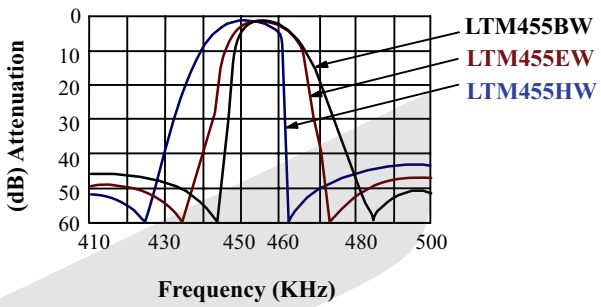

ORDER INFORMATION

KLS14-LTM455-EW

Pos. No.
Part Number

Ceramic Filter Series

KLS14-SFU450 Ceramic Filter Series

SFU450 Filters are designed to address the needs of standard AM filtering requirements. These filters are recommended for use in low cost products where economically, efficient designs are critical.

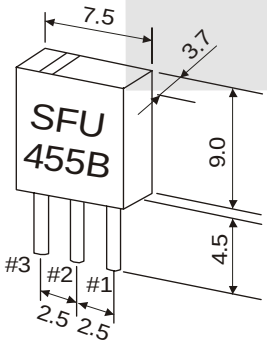

PIN	FUNCTION
#1	Input
#2	Ground
#3	Output

Unit:mm

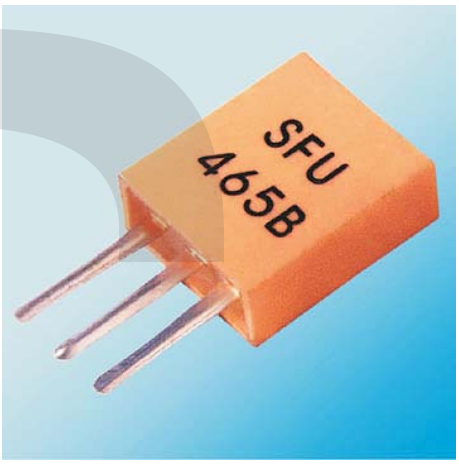

SFU SERIES OF CERAMIC FILTER FOR AM 450.0 ~ 470.0 kHz

PART NUMBER	3 dB BAND WITH (kHz)	SELECTIVITY		INSERTION LOSS	COMPOSITION
		-9 kHz off	+9 kHz off		
SFU455A	10 +-3	≥ 5 dB	≥ 3 dB	≥ 5 dB	1 ELEMENT
SFU455B	10 +-3	≥ 5 dB	≥ 3 dB	≥ 5 dB	1 ELEMENT WITH IFT
SFU465B	10 +-3	≥ 5 dB	≥ 3 dB	≥ 5 dB	1 ELEMENT WITH IFT

CENTER FREQUENCY (F0) IS AVAILABLE IN A RANGE OF 450.0 ~ 450.0 kHz
THE NOMINAL FREQUENCY TOLERANCE IS +-2 kHz

TEST CIRCUIT

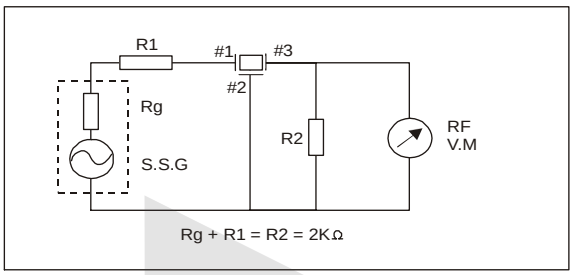

CHARACTERISTICS

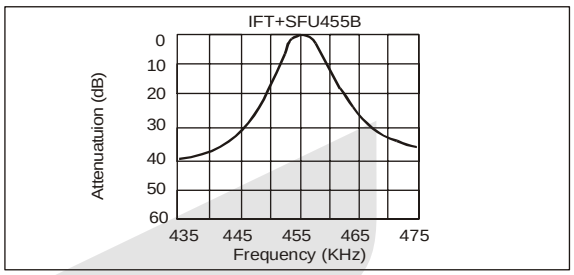

ORDER INFORMATION

KLS14- SFU455B

Pos. No.
Part Number

Ceramic Discriminators Series

KLS14-JT4. 5M Ceramic Discriminators For TV Series

Features

JT_M series ceramic discriminators are widely used in telecommunication, cable, radar, TV set, tape recorder, video camera and other electronic products due to its lower price and stable performances.



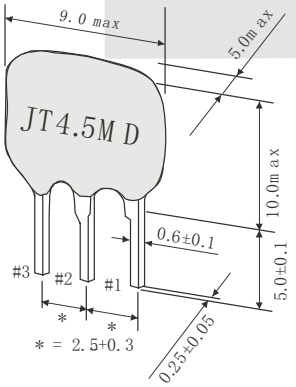

Unit:mm

PIN	FUNCTION
#1	Input
#2	Ground
#3	Output

Part Number	Demodulation Output fo (mV) Min	Demodulation 3db Bandwidth (KHz) Min	Distortion Factor fo (%) Max	Applicable IC
JT4.5MD	≥100	≥ 50	≤3	TA7176P
JT5.5MD	≥100	≥ 50	≤3	TA7176P
JT6.0MD	≥100	≥ 50	≤3	TA7176P
JT6.5MD	≥100	≥ 50	≤3	TA7176P

FREQUENCY CHARACTERISTICS FOR MT4.5MD

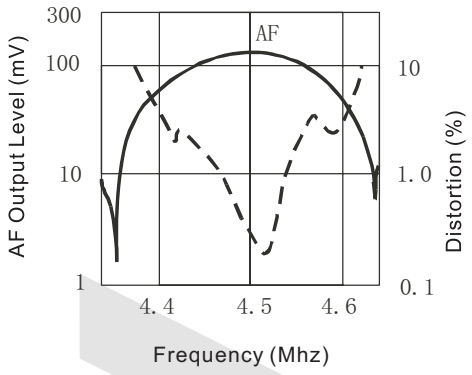

TEST CIRCUIT

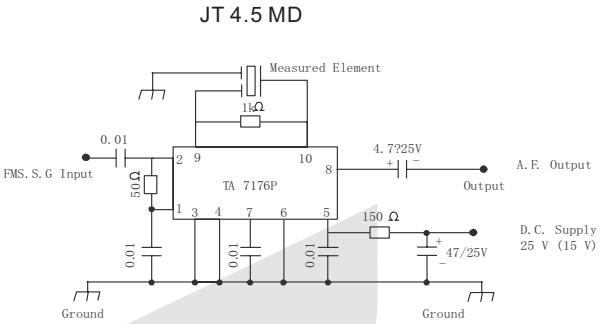

ORDER INFORMATION

KLS14- JT4. 5MD - A P

Pos. No. — Packaging
Part Number — Center Frequency color code

Ceramic Discriminators Series

KLS14-JT10.7M Ceramic Discriminators For FM Series

Features

JT10.7M for FM are resonated devices that offer adjustment free audio detection in both wide and narrow bandwidths. These IC dependent devices utilize FM specific detection methods to convert changes in frequency into an intelligible audio signal.

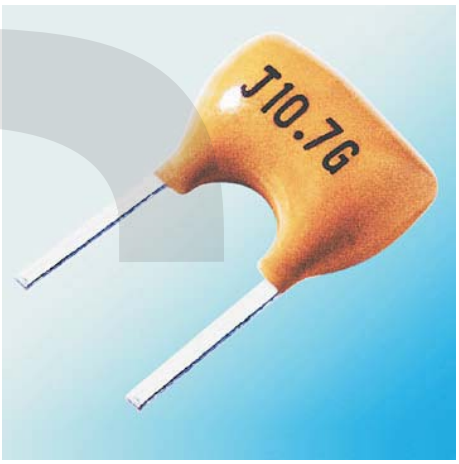

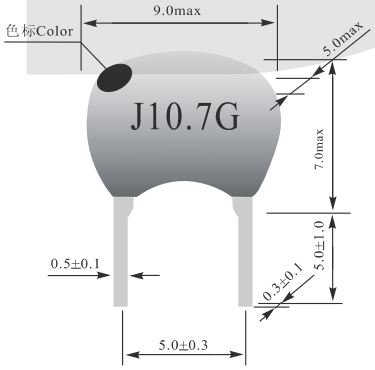

JT10.7M Series For FM Standard Rule

Center Frequency	Color
D: 10.64MHz ± 30kHz	Black
B: 10.67MHz ± 30kHz	Blue
A: 10.70MHz ± 30kHz	Red
C: 10.73MHz ± 30kHz	Orange
E: 10.76MHz ± 30kHz	White

JT10.7M Series For FM Test Circuit

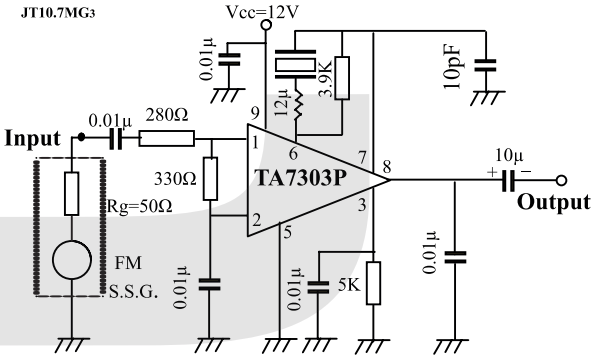

KLS14-JT10.7M Series For FM Technical Characteristics

Part Number	Demodulation Output at fo (mv) min	Distortion Factor at fo (%) max	Demodulation 3dB Band Width (KHz) max	Applicable IC
JT10.7MG1	25	1.0	345	CX-2009, CX-20111
JT10.7MG3	650	1.0	±150	TA7303P, TA7130, μPC1028H, LA1150
JT10.7MG16	60~90	0.9	300	TA8122AN
JT10.7MG18	60~90	0.9	300	TA8132N
JT10.7MG33	45	0.7	250	TA2007
JT10.7MG80	65	1.0	300	TA2104AFN
JT10.7MG82	90	0.8	320	TA2099N
JT10.7MG92	60	1.0	300	TA2132P
JT10.7MC1	35	1.0	242	CXA1019M, CX-20091

ORDER INFORMATION

KLS14-JT10. 7MG3-A P

Pos. No. / Part Number

Packaging

Center Frequency color code

Ceramic Discriminators Series

KLS14-JT10.7M Ceramic Discriminators For FM Series

JT10.7M Series For FM Test Circuit

JT10.7MG16

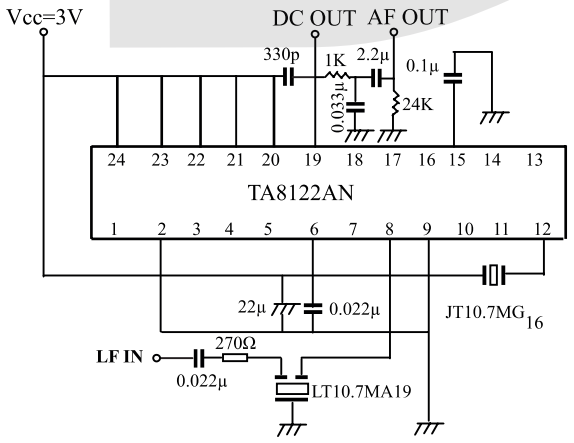

JT10.7MG18

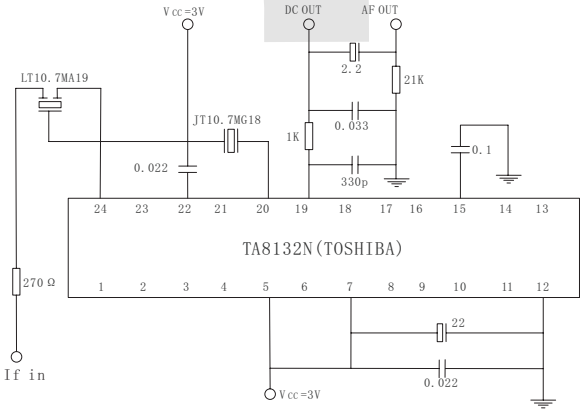

JT10.7MC1

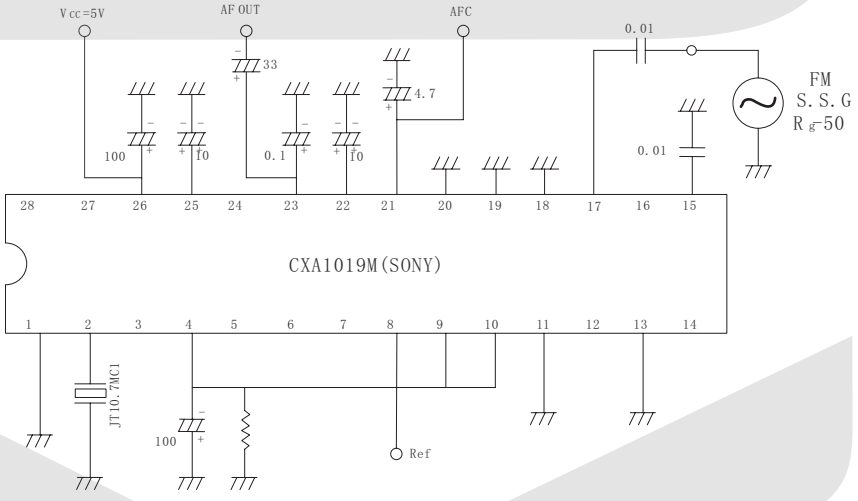

ORDER INFORMATION

KLS14-JT10.7MG3-A P

Pos. No. — Packaging
Part Number — Center Frequency color code

Aluminum Electrolytic Capacitor Series

X

Explanation of Part Numbers

KLS10 - PT 221 M 016 FFB R

Series	Code
CD11	GS
CD110	PT
CD110X	SX
CD11W	LM
CD11L	ML
CD11T	MT
CD71	NP
CD72	BP
CDS	HX
CD81	TR
CD117	SH
AK10	AN
AK20	AB
CD11H	GF
CD11Z	SZ
CD293	BZ
CD60	QD
CD13N	PK
CD21S	PS
CD294	SK

Cap(uf)	Code
0.1	0R1
0.22	R22
0.33	R33
0.47	R47
1	1R0
2.2	2R2
3.3	3R3
4.7	4R7
10	100
22	220
33	330
47	470
100	101
220	221
330	331
470	471
1000	102
2200	222
3300	332
4700	472
10000	103
22000	223

Toler (mce%)	Code
+5	J
-5	
+10	K
-10	
+15	L
-15	
+20	M
-20	
+100	P
0	
+30	Q
-10	
+20	R
-0	
+50	T
-10	
+75	U
-10	
+20	V
-10	
+20	H
-5	
+30	F
-0	

Voltage	Code
6.3	6R3
10	010
16	016
25	025
35	035
50	050
100	100
160	160
200	200
250	250
330	330
350	350
400	400
450	450

Feature	Code
Bulk packing	PL
Lead cut	CC
lead cut&formed	FC
Snap-in&lead cut	MC
Snap-in forming	FM
Taped ammo-pack F=5mm	FFB / FFA
Taped ammo-pack straight lead	FFC

PCB Terminal	Code
Vertieal	V
Radial	R
Snap in	S
Lug	L
Serew	G
Axial	A

Aluminum Electrolytic Capacitor Series

X

SERIES OF CAPACITOR

NO.	SERIES	FEATURES APPLICATIONS	OPERATURE TEMPERATURE RANGE(℃)	RATED VOLTAGE(V)	CAPACITANCE RANGE(μF)	SHAPEOR TYPE	
1	CD11 (SS)	Miniature standard	-40～+85	6.4～450	0.1～10000	Radial	
2	CD110 (TN)	Color TV Standard	-40～+85	6.3～100	0.1～10000	Radial	
			-25～+85	100～250	1.0～250		
3	CD11X (SX)	Super Miniature 7mm Height	-40～+105	6.3～63	0.1～470	Radial	
4	CD11W (SSX)	Super Miniature 5mm Height	-40～+105	4～50	0.1～330	Radial	
5	CD11L (ML)	Low Leakage Current	-40～+85	6.3～100	0.1～4700	Radial	
6	CD11T (MT)	Long Life	-40～+85	6.3～100	1.0～4700	Radial	
7	CD71 (NP)	Non-Polar Standard	-40～+85	6.3～100	0.47～6800	Radial	
8	CD72 (BP)	Non-polar Speaker	-40～+85	10～100	0.47～47	Radial	
9	CDS (NP)	For Hori Zontal Deflectien	-40～+85	10～100	0.47～47	Radial	
10	CD81 (TR)	High Temp.(105℃)	-40～+105	10～100	1.0～4700	Radial	
			-25～+105	160～450	1.0～200		
11	CD117 (SH)	High Precision Stability	-40～+85	10～50	0.47～470	Radial	
12	AK10 (BP)	Axial Bi-Polar	-40～+85	50～100	1.0～100	Axial	
13	AK20 (BP)	Axial Bi-Polar	-40～+85	50～100	1.0～220	Axial	
14	CD11H (GF)	High Frequency Low Impedance	-40～+105	6.3～250	0.47～6800	Radial	
15	CD11Z (SZ)	Middle And High Voltage Standard	-40～+85	160～450	1～220	Radial	
16	CD293 (BZ)	Standard Miniaturized	-40～+85	160～400	33～470	Snap-in	
17	CD60 (QD)	Motor Starting	-20～+55	110～220	50～400	Lug	
18	CD13N (PK)	High Ripple Current	-40～+85	160～450	220～15000	Screw	
19	CD21S (PS)	Flash Lamp Circuits in camera	-20 ~ +55	330v	20~370	radial	
20	CD294 (SK)	105c 2000his High Ripple Currert	-40 ~ +105	10-400v	39~2200	snap-in	

Aluminum Electrolytic Capacitor Series

KLS10 - CD11 (GS) Series

X



Miniature Standard

Miniature Standard,good stable and reliable performances.

D≥8mm equipped with pressure release device.

Widely used in DC or pulse circuit of TV,VCD(DVD),

AUDIO systems,telecommunications and computers.

Item	Characteristics
Size and its tolerance 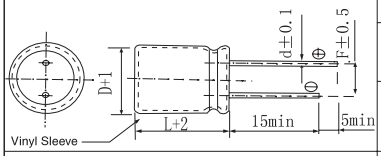	∅D: 5 / 6 / 8 / 10 / 12 / 13 / 16 / 18 / 22 / 25 / 26 F ± 0.5: 2.0 / 2.5 / 3.5 / 5.0 / 7.5 / 10 / 12.5 d ± 0.1: 0.5 / 0.6 / 0.8
Operating Temp. Range	-40℃～+85℃
Rated Working Voltage	6.3～450VDC
Capacitance Range	0.1～10000μF(+20℃,100 or 120HZ)
Capacitance Tol.	±20%, $^{+30}_{-10}$%(+20℃,100 or 120Hz)
Dissipation Factor tg δ	At +20℃ and 100 or 120Hz,for CR>1000μF, tg δ add 0.02 per another 1000μF. UR (V): 6.3 / 10 / 16 / 25 / 35 / 50,63 / 100 / 160～250 / 400,450 (A grade): 0.24 / 0.22 / 0.20 / 0.15 / 0.12 / 0.10 / 0.08 / 0.16 / 0.20 (B grade): GB5995-86
Leakage Current IL	A grade ≤0.03·CR·UR or 5μA (≤100VDC) whichever is greater ≤0.03·CR·UR + 10μA (≥160VDC) B grade GB5995-86 At+20℃,after 2 minutes application of UR
Load Life	At +85℃ after UR applied for 1000 hours. △C: $^{+20}_{-30}$% (6.3VDC)、±20%(10-100VDC)、±15%(≥160VDC) of initial measured value DF(tg δ): ≤200% (≤100VDC)、150% (≥160VDC) of initial specified value LC(IL): ≤ initial specified value
Shelf Life	After shelf for 500 hours(without voltage applied) at +85℃,then restored for 16 hours at room temp. △C: $^{+20}_{-30}$% (6.3VDC)、±20%(10-100VDC)、±15%(≥160VDC) of initial measured value DF(tg δ): ≤200% (≤100VDC)、150% (≥160VDC) of initial specified value LC(IL): ≤200% of initial specified value
Others	GB5995-86

Note:We can also provide the capacitors according to the customer's request.

Aluminum Electrolytic Capacitor Series

KLS10 - CD11 (GS) Series

X

Case Size of Standard Prosucts

CR(μF) \ UR(V)	6.3	10	16	25	35	50	63	100
0.1～0.68						5×11	5×11	5×11
1.0						5×11	5×11	5×11
2.2						5×11	5×11	5×11
3.3						5×11	5×11	5×11
4.7					5×11	5×11	5×11	5×11
10			5×11	5×11	5×11	5×11	5×11	6×12
22	5×11	5×11	5×11	5×11	5×11	5×11	6×11	8×14
33	5×11	5×11	5×11	5×11	5×11	6×12	8×12	10×13
47	5×11	5×11	5×11	5×11	6×11	6×12	8×12	10×15
100	5×11	5×11	5×11	6×12	8×11	8×12	8×12	10×20
220	5×12	5×12	6×12	8×12	8×14	10×15	10×17	12×25
330	6×12	6×12	8×12	8×12	10×15	10×17	12×20	16×25
470	6×12	8×12	8×12	8×14	10×17	10×20	13×20	16×30
1000	8×12	8×12	10×15	10×18	13×20	13×26	16×31	19×40
2200	10×15	10×15	12×20	13×21	16×27	16×32	18×41	25×40
3300	10×20	12×20	13×21	16×27	16×36	18×36	22×42	35×50
4700		13×21	13×26	16×27	18×36	22×40	22×50	35×50
6800		16×25	16×26	16×36	19×40	22×50	25×50	35×60
10000		16×30	19×30	19×40	22×40	25×50	30×50	35×70

Note:We can also provide the capacitors according to the customer's request.

CR(μF) \ UR(V)	160	200	250	400	450
0.1~0.68					
1.0	5×12	6×12	6×12	8×12	8×12
2.2	6×12	8×12	8×12	8×12	8×14
3.3	6×12	8×12	8×12	8×14	8×14
4.7	8×12	8×12	8×14	10×20	10×20
10	8×14	10×15	10×17	12×20	12×20
22	10×15	10×20	12×20	12×25	16×25
33	10×20	12×20	12×25	18×20	16×30
47	13×21	12×20	13×25	18×27	18×30
100	13×26	16×27	16×30	22×35	22×40
220	16×36	18×36	22×30	25×40	25×50
330	22×35	22×40	25×40	30×40	30×50
470	22×40	22×50	25×50	30×50	35×50

Note:We can also provide the capacitors according to the customer's request.

Aluminum Electrolytic Capacitor Series

KLS10 - CD110 (PT) Series

X

Color TV Standard



Better stable and reliable performance,good uniformity.
D≥8mm equipped with pressure release device.
Be used widely in DC or pulse circuit of color TV,color tubes,telecommunications and computers.

Item	Characteristics								
Size and its tolerance 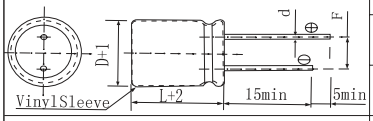	⌀D	5	6	8	10	12	13	16	18
	F ± 0.5	2.0	2.5	3.5	5.0			7.5	
	d ± 0.1	0.5			0.6			0.8	
Operating Temp. Range	-40℃～+85℃(≤100VDC)　　-25℃～+85℃(160、250VDC)								
Rated Working Voltage	6.3～250VDC								
Capacitance Range	0.1～10000μF(+20℃,100 or 120HZ)								
Capacitance Tol.	±20%,$^{+30}_{-10}$%(+20℃,100 or 120HZ)								
Dissipation Factor tg δ	At +20℃ and 100 or 120Hz,for CR>1000μF, tg δ add 0.02 per another 1000μF.								

UR(V)	6.3	10	16	25	35	50	63	100	160	250
tg δ	0.24	0.22	0.16	0.14	0.12	0.10	0.09	0.08	0.16	0.18

Leakage Current IL	≤0.01·CR·UR or 3μA(UR≤100VDC) whichever is greater ≤0.03·CR·UR + 10μA(UR≥160VDC) At+20℃,after 2 minutes application of UR
Load Life	At +85℃after UR applied for 1000 hours .

△C	$^{+20}_{-30}$% (6.3VDC)、±20%(10-100VDC)、±15%(≥160VDC) of initial measured value
DF(tg δ)	≤150% of initial specified value
LC(IL)	≤ initial specified value

Shelf Life	At +85℃, after shelf for 500 hours(without voltage applied) ,then restored for 16 hours at room temp.

△C	±20% of initial measured value
DF(tg δ)	≤150% of initial specified value
LC(IL)	≤200% of initial specified value

Others	GB9608-88

Case Size of Standard Prosucts

CR(μF) \ UR(V)	6.3	10	16	25	35	50	63	100	160	250
0.1～0.68						5×11	5×11	5×11		
1.0,1.5						5×11	5×11	5×11	5×11	6×12
2.2						5×11	5×11	5×11	6×12	8×12
3.3						5×11	5×11	5×11	8×12	8×12
4.7				5×11		5×11	5×11	6×11	8×12	8×14
6.8				5×11		5×11	5×11	6×11	10×15	10×15
10			5×11	5×11	5×11	5×11	5×11	6×12	10×15	10×15
15			5×11	5×11	5×11	6×11	6×11	8×12	10×15	10×20
22		5×11	5×11	5×11	5×11	6×11	6×12	8×14	10×17	13×20
33	5×11	5×11	5×11	5×11	5×11	6×12	8×12	10×15	12×20	13×25
47	5×11	5×11	5×11	5×11	6×12	8×11	8×12	10×17	13×20	16×26
68	5×11	5×11	6×11	6×12	6×12	8×12	10×13	10×20	13×25	16×32

CR(μF) \ UR(V)	6.3	10	16	25	35	50	63	100	160	250
100	5×11	6×11	6×12	8×12	8×12	8×12	10×15	10×22	13×26	16×30
150	5×11	6×12	6×12	8×12	8×12	10×17	10×20	13×21	16×32	
220	5×12	6×12	8×12	8×12	8×14	10×17	12×20	13×25	16×36	
330	6×12	8×12	8×12	8×14	10×15	10×20	13×20	16×32		
470	8×12	8×12	8×14	10×15	10×17	12×20	16×26	16×36		
680	8×14	10×15	10×15	10×17	12×20	16×25	16×26			
1000	8×14	10×15	10×17	10×20	13×20	16×26	16×35			
1500	10×15	10×20	13×20	13×20	16×25	18×32				
2200	10×20	10×20	13×21	13×26	16×27	18×36				
3300	13×20	13×20	13×21	16×32	16×36	18×38				
4700	13×25	13×25	16×25	16×34	18×36	22×42				
6800	16×26	16×26								
10000	16×32									

Note:We can also provide the capacitors according to the customer's request.

Aluminum Electrolytic Capacitor Series

KLS10 - CD110X (SX) (7mm) Series

X

7mm Super Miniature

Super miniature size, light weight, good stable and relible performance, good uniformity.
Widely used in electronic equipment of thin and high density assemblies, such as recorders, cameras, computers and telecommunications.



Item	Characteristics				
Size and its tolerance 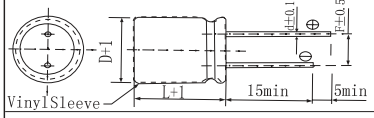	ØD	4	5	6	8
	F ± 0.5	1.5	2.0	2.5	3.5
	d ± 0.1	0.45		0.5	
Operating Temp. Range	-40℃～+105℃				
Rated Working Voltage	6.3～63VDC				
Capacitance Range	0.1～470μF(+20℃,100 or 120Hz)				
Capacitance Tol.	±20%, $^{+30}_{-10}$%(+20℃,100 or 120Hz)				
Dissipation Factor tg δ	At +20℃,100 or 120Hz				

U_R (V)	6.3	10	16	25	35	50	63
tgδ	0.22	0.20	0.16	0.14	0.12	0.10	0.10

Leakage Current I_L	A grade ≤0.01·C_R·U_R or 3μA whichever is greater At+20℃ after 2 minutes application of U_R.
Load Life	At +85℃ after U_R applied for 1000 hours.

△C	±20% of initial measured value
DF(tg δ)	≤200% of initial specified value
LC(I_L)	≤ initial specified value

Shelf Life	At +85℃, after shelf for 500 hours(without voltage applied) and then restored for 16 hours at room temp.

△C	±20% of initial measured value
DF(tg δ)	≤200% of initial specified value
LC(I_L)	≤200% of initial specified value

Case Size of Standard Products

U_R(V) / C_R(μF)	6.3	10	16	25	35	50	63
0.1～3.3						4×7	4×7
4.7					4×7	4×7	5×7
6.8					4×7	4×7	5×7
10			4×7	4×7	4×7	5×7	6×7
22			4×7	4×7	5×7	6×7	8×9
33		4×7	5×7	5×7	6×7	8×9	
47		4×7	5×7	6×7	6×7		
68		5×7	6×7	8×9	8×9		
100	5×7	5×7	6×7	8×9	8×9		
220	6×7	6×7	8×9				
330	8×9	8×9					
470	8×9						

Note:We can also provide the capacitors according to the customer's request.

Aluminum Electrolytic Capacitor Series

KLS10 - CD11W (LM) (5mm) Series

X

5mm Super Miniature



Ultra miniature series with 5mm height.
Used in camera, auto speaker, personal stereo, VCD, DVD, mobile telephone, recrudescent, etc.

Item	Characteristics				
Size and its tolerance 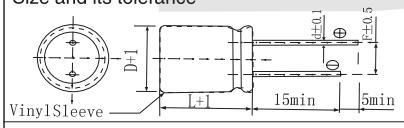	⌀D	4	5	6.3	8
	F	1.5	2.0	2.5	2.5
	⌀d	0.45	0.45	0.45	0.45
Operating Temp. Range	-40℃～+105℃				
Rated Working Voltage	4～50VDC				
Capacitance Tol.	±20%,(M)at 120Hz 20℃				
Leakage Current max.	I = 0.01CV or 3μA whichever is greater after 2 minutes.				
	I:Leakage Current(μA) C:Rated Capacitance(μF) V:Working Voltage(V)				
Dissipation Factor max. (at 120Hz,20℃)	WV: 4 / 6.3 / 10 / 16 / 25 / 35 / 50 tan δ: 0.35 / 0.27 / 0.20 / 0.16 / 0.14 / 0.12 / 0.10				
Low Temperature Stability (Impedance radio at 120Hz)	WV: 4 / 6.3 / 10 / 16 / 25-50 Z(-25℃)/Z(+20℃): 7 / 3 / 3 / 2 / 2 Z(-40℃)/Z(+20℃): 12 / 8 / 5 / 4 / 3				
Load Life	After 1000 hours application for W V. at 105℃ the capacitor shall meet the following limits. △C: ±20% of initial measured value(±30% 4V) DF(tg δ): ≤200% of initial specified value LC(IL): ≤200% of initial specified value				
Shelf Life(105℃)	After 1000 hours of no load test leakage current capacitance and tan δ are same as load life value.				
Reference Standard	JIS C-5141				

Case Size of Standard Prosucts

WV / μF	4		6.3		10		16		25		35		50	
	SIZE	R C	SIZE	R C	SIZE	R C	SIZE	R C	SIZE	R C	SIZE	R C	SIZE	R C
0.1													4×5	1.6
0.22													4×5	2.4
0.33													4×5	3.2
0.47													4×5	4
0.68													4×5	5.6
1.0													4×5	5.6
2.2													4×5	10
3.3											4×5	11	4×5	12
4.7									4×5	12	4×5	13	5×5	15
6.3									4×5	15	5×5	17	5×5	20
10			4×5	12	4×5	13	4×5	16	5×5	19	5×5	22	6.3×5	26
22	4×5	16	4×5	16	5×5	22	5×5	29	6.3×5	34	6.3×5	36		
33	4×5	20	5×5	23	5×5	29	6.3×5	37	6.3×5	45				
47	4×5	24	5×5	28	6.3×5	35	6.3×5	46						
68	5×5	36	6.3×5	46	6.3×5	47	6.3×5	52						
100	5×5	41	6.3×5	50	6.3×5	52	6.3×5	58						
220	6.3×5	56	8×5	60					Ripple current(mArms) at105℃, 120Hz Case size DxL(mm)					
330	8×5	150	8×5	175										

Note:We can also provide the capacitors according to the customer's request.

Aluminum Electrolytic Capacitor Series

KLS10 - CD11L (ML) Series

X

Low Leakage Current



Low leakage current, high stable and reliable performance
D≥8mm equipped with pressure release device.
Be used widely in DC or pulse circuit of colour TV sets, VCD, audio systems, telecommunications and computers.

Item	Characteristics
Size and its tolerance 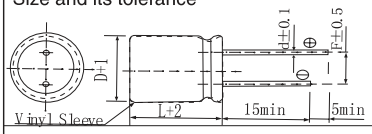	ØD: 5 / 6 / 8 / 10 / 12 / 13 / 16 / 18 F ± 0.5: 2.0 / 2.5 / 3.5 / 5.0 / 7.5 d ± 0.1: 0.5 / 0.6 / 0.8
Operating Temp. Range	-40℃～+85℃
Rated Working Voltage	6.3～100VDC
Capacitance Range	1.0～4700μF(+20℃,100 or 120Hz)
Capacitance Tol.	±20%, $^{+30}_{-10}$%(+20℃,100 or 120Hz)
Dissipation Factor tg δ	At +20℃,100 or 120Hz,for CR>1000μF, tg δ add 0.02 per another 1000μF. UR (V): 6.3 / 10 / 16 / 25 / 35 / 50 / 63 / 100 tgδ: 0.24 / 0.20 / 0.20 / 0.14 / 0.12 / 0.10 / 0.09 / 0.08
Leakage Current IL	≤0.002·CR·UR or 1μA(≥160VDC) whichever is greater At+20℃ after 2 minutes application of UR.
Load Life	At +85℃, after UR applied for 1000 hours. △C: ±20% of initial measured value DF(tg δ): ≤150% of initial specified value LC(IL): ≤ initial specified value
Shelf Life	At+85℃, after shelf for 500 hours(without voltage applied) , then restored for 16 hours at room temp. △C: ±20% of initial measured value DF(tg δ): ≤150% of initial specified value LC(IL): ≤200% of initial specified value

Case Size of Standard Prosucts

CR (μF) \ UR(V)	6.3	10	16	25	35	50	63	100
1.0						5×11		5×11
2.2						5×11		5×11
3.3						5×11		5×11
4.7						5×11	5×11	6×11
10			5×11	5×11	5×11	5×11	5×11	6×12
22		5×11	5×11	5×11	5×11	6×11	6×12	8×12
33		5×11	5×11	5×11	6×11	6×12	8×12	10×13
47	5×11	5×11	5×11	6×11	6×12	8×11	8×12	10×17
100	5×11	6×11	6×12	6×12	8×12	10×13	10×15	12×22
220	6×12	6×12	8×12	10×13	8×14	10×20	12×22	16×27
330	6×12	8×12	10×13	10×15	10×17	12×22	12×26	16×31
470	8×12	10×13	10×15	10×17	12×22	13×26	16×27	18×36
1000	10×13	10×17	12×22	13×22	13×26	16×31	16×35	
2200	12×22	13×22	13×26	16×27	16×35	18×41		
3300	13×22	13×26	16×27	16×35				
4700	13×26	16×27	16×31					

Note:We can also provide the capacitors according to the customer's request.

KLS electronic
www.cnkls.com

X

Aluminum Electrolytic Capacitor Series

KLS10 - CD11T (MT) Series

Long Life

Better stable and reliable perfomance, long life.
D≥8mm equipped with pressure release device.
Be used in DC or pulse circuit of colour TV sets, telecommunications and computers.



Item	Characteristics
Size and its tolerance 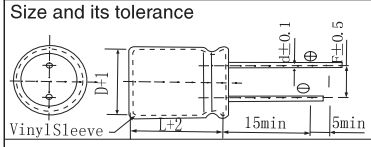	ØD: 5 / 6 / 8 / 10 / 12 / 13 / 16 / 18 F ± 0.5: 2.0 / 2.5 / 3.5 / 5.0 / 7.5 d ± 0.1: 0.5 / 0.6 / 0.8
Operating Temp. Range	-40℃～+85℃(≤100VDC)　　-25℃～+85℃(160-400VDC)
Rated Working Voltage	6.3～400VDC
Capacitance Range	0.1～4700μF(+20℃,100 or 120Hz)
Capacitance Tol.	±20%, $^{+30}_{-10}$%(+20℃,100 or 120Hz)
Dissipation Factor tg δ	At +20℃,100 or 120Hz,for CR>1000μF, tg δ add 0.02 per another 1000μF. UR (V): 10 / 16 / 25 / 35 / 50 / 63 / 100 / 160 / 250 / 400 tgδ: 0.22 / 0.20 / 0.15 / 0.12 / 0.10 / 0.10 / 0.10 / 0.16 / 0.18 / 0.20
Leakage Current IL	≤0.01·CR·UR or 3μA(UR≤100VDC)whichever is greater ≤0.03·CR·UR + 10μA(UR≥160VDC) At +20℃, measured after 2 minutes application of UR.
Load Life	At+85℃ after UR △C: ±20% ($^{+20}_{-30}$% 6.3V) of initial measured value DF(tg δ): ≤200% of initial specified value LC(IL): ≤ initial specified value
Shelf Life	At 85℃, after shelf for 1000 hours(without voltage applied) ,then restored for 16 hours at room temp. △C: ≤±20% of initial measured value DF(tg δ): ≤200% of initial specified value LC(IL): ≤200% of initial specified value

Case Size of Standard Prosucts

CR \ UR(V) (μF)	10	16	25	35	50	63	100	160	250	400
0.1～0.68					5×11		5×11			
1.0,1.5					5×11		5×11	6×12	6×12	8×12
2.2					5×11		5×11	6×12	8×12	10×13
3.3					5×11		5×11	8×12	8×12	10×15
4.7			5×11		5×11	5×11	6×11	8×12	10×13	10×17
6.8			5×11		5×11	5×11	6×11	10×13	10×15	10×20
10		5×11	5×11	5×11	5×11	5×11	6×12	10×13	10×15	12×22
15		5×11	5×11	5×11	6×11	6×11	8×12	10×15	10×20	13×26
22	5×11	5×11	5×11	5×11	6×11	6×12	8×12	10×20	12×22	16×27
33	5×11	5×11	5×11	6×11	6×12	8×12	10×13	12×22	13×26	16×31
47	5×11	5×11	6×11	6×12	8×11	8×12	10×17	13×22	16×27	16×36
68	5×11	6×11	6×12	6×12	8×12	10×13	10×20	13×26	16×31	18×41

CR \ UR(V) (μF)	10	16	25	35	50	63	100	160	250	400
100	6×11	6×12	6×12	8×12	10×13	10×15	12×22	16×27	16×35	
150	6×12	6×12	8×12	10×13	10×17	10×20	13×26	16×35		
220	6×12	8×12	10×13	10×14	10×20	12×22	16×27	18×36		
330	8×12	10×13	10×15	10×17	12×22	13×26	16×31			
470	10×13	10×15	10×17	12×22	13×26	16×27	18×36			
680	10×13	10×17	12×22	13×22	16×27	16×27				
1000	10×17	12×22	13×22	13×26	16×31	16×35				
1500	12×22	13×22	13×26	16×27	18×36					
2200	13×22	13×26	16×27	16×35	18×41					
3300	13×26	16×27	16×35							
4700	16×27	16×31								
6800	16×35									

Note:We can also provide the capacitors according to the customer's request.

Aluminum Electrolytic Capacitor Series

KLS10 - CD71 (NP) Series

X

Non-Polar Standard

The polarity can be reversed standard size.
used in circuits what polarity is reversed, such as signal coupling, etc.



Item	Characteristics								
Size and its tolerance 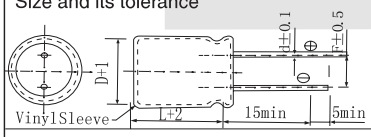	ØD	5	6	8	10	12	13	16	18
	F ± 0.5	2.0	2.5	3.5	5.0			7.5	
	d ± 0.1	0.5			0.6			0.8	
Operating Temp. Range	-40℃～+85℃								
Rated Working Voltage	6.3V～100VDC								
Capacitance Range	0.47μF～10000μF								
Capacitance Tol.	±20%,(100Hz.20℃)								
Dissipation Factor tg δ	At +20℃ and 100 or 120Hz,for CR>1000μF, tg δ add 0.02 per another 1000μF.								
	UR (V)	6.3	10	16	25	35	50	63	100
	tgδ	0.24	0.24	0.22	0.20	0.16	0.14	0.12	0.10
Leakage Current IL	≤0.03·CR·UR or 5μA whichever is greater At +20℃,after 2 minutes application of UR								
Load Life	At +85℃ after UR applied for 1000 hours.								
	△C	±20% of initial measured value							
	DF(tg δ)	≤150% of initial specified value							
	LC(IL)	≤ initial specified value							
Shelf Life	At 85℃, after shelf for 500 hours(without voltage applied) , then restored for 16 hours at room temp.								
	△C	±20% of initial measured value							
	DF(tg δ)	≤150% of initial specified value							
	LC(IL)	≤200% of initial specified value							

Case Size of Standard Prosucts

CR (μF) \ UR(V)	6.3	10	16	25	35	50	63	100
0.47						5×11		5×11
1						5×11		5×11
2.2						5×11		6×12
3.3						5×11	5×11	6×12
4.7					5×11	5×11	6×12	6×12
10			5×11	5×11	5×11	6×12	6×12	8×12
22		5×11	5×11	6×12	6×12	8×12	8×12	10×16
33	5×11	5×11	5×11	6×12	8×12	8×12	10×13	13×20
47	5×11	5×11	6×12	6×12	8×12	10×13	10×16	13×20
100	6×12	6×12	8×12	8×12	10×16	10×20	13×20	16×25
220	8×12	8×12	10×13	10×16	13×20	13×25	16×25	18×36
330	8×12	10×16	10×16	13×20	13×20	16×25	16×32	
470	10×12	10×16	10×20	13×20	13×25	16×32	18×36	
1000	10×20	13×20	13×25	16×25	16×32			
2200	13×25	16×25	16×32	18×36				
3300	16×25	16×32	18×36					
4700	16×32	18×36						
6800	16×36							

Note:We can also provide the capacitors according to the customer's request.

KLS electronic
www.cnkls.com

X

Aluminum Electrolytic Capacitor Series

KLS10 - CD72 (BP) Series



Non-Polar Speaker

Low dissipation factor, high ripple current used in speaker dividing network circuits.

Item	Characteristics				
Size and its tolerance 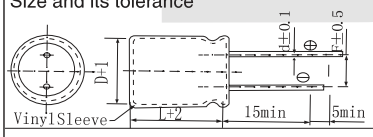	⌀D	8	10	13	16
	F ± 0.5	3.5	5.0		7.5
	d ± 0.1	0.5	0.6		0.8
Operating Temp. Range	-40℃～+85℃				
Rated Working Voltage	10～100VDC				
Capacitance Range	0.47μF～47μF				
Capacitance Tol.	±10%(+20℃,100 or 120Hz)				
Dissipation Factor tg δ	At +20℃,100 or 120Hz				

UR (V)	10	16	25	35	50	63	100
tg δ	0.10	0.08	0.06	0.05	0.05	0.04	0.04

Leakage Current IL	≤0.03·CR·UR or 3μA whichever is greater At +20℃,after 2 minutes application of UR.
Load Life	At +85℃, after UR applied for 1000 hours .

△C	±20% of initial measured value
DF(tg δ)	≤150% of initial specified value
LC(IL)	initial specified value

Shelf Life	At+85℃, after shelf for 500 hours(without voltage applied) ,then restored for 16 hours at room temp.

△C	±20% of initial measured value
DF(tg δ)	≤150% of initial specified value
LC(IL)	≤200% of initial specified value

Case Size of Standard Prosucts

UR(V) / CR(μF)	10	16	25	35	50	63	100
0.47					8×12	10×12	10×16
0.68					10×12	10×16	10×20
1.0			8×12	10×12	10×16	10×20	13×20
1.5			8×12	10×12	10×16	10×20	13×20
2.2		8×12	10×12	10×16	10×20	13×20	13×25
3.3	8×12	10×12	10×16	10×20	10×20	13×20	13×25
4.7	10×13	10×16	10×20	10×20	13×20	13×25	16×25
6.8	10×13	10×16	10×20	13×20	13×25	16×25	16×25
10	10×16	10×20	13×20	13×20	16×25	16×25	
15	10×16	10×20	13×20	13×25	16×25		
22	10×20	13×20	13×25	16×25			
33	13×20	13×25	16×25				
47	13×25	16×25					

Note:We can also provide the capacitors according to the customer's request.

KLS electronic
www.cnkls.com

X

Aluminum Electrolytic Capacitor Series

KLS10 - CDS (HX) Series



For Horizontal Deflection

Nonpolar Small loss at high frequency, high ripple current.
Used in S correction of horizontal deflection current in TVs.

Item	Characteristics				
Size and its tolerance 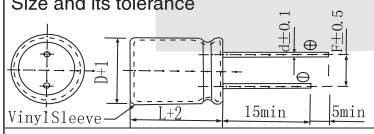	ØD	10	13	16	18
	F ± 0.5	5.0		7.5	
	d ± 0.1	0.6		0.8	
Operating Temp. Range	-40℃～+85℃				
Rated Working Voltage	10V～100VDC				
Capacitance Range	0.47μF～47μF				
Capacitance Tol.	±10%, ±20%(+20℃100 or 120Hz)				
Dissipation Factor tg δ	+20℃,100 or 120Hz.				

U_R (V)	10	16	25	35	50	63	100
tgδ	0.08	0.06	0.05	0.04	0.04	0.03	0.03

Leakage Current I_L	≤100μA At+20℃,after 5 minutes application of U_R
Load Life	At +85℃, after U_R applied for 1000 hours (polarity inverson after discharge per 250 hours):

△C	±15% of initial measured value
DF(tg δ)	≤150% of initial specified value
LC(I_L)	≤ initial specified value

Shelf Life	At+85℃,after shelf for 500 hours(without voltage applied),then restored for 16 hours at room temp.

△C	±15% of initial measured value
DF(tg δ)	≤150% of initial specified value
LC(I_L)	≤ 200% of initial specified value

Case Size of Standard Prosucts

C_R(μF) \ U_R(V)	10	16	25	35	50	63	100
0.47							13×20
0.68						13×20	13×25
1.0			10×20	10×20	13×20	13×25	16×25
1.5			10×20	13×20	13×25	16×25	16×32
2.2		10×20	13×20	13×25	16×25	16×32	16×36
3.3	10×20	13×20	13×25	16×25	16×32	16×36	18×36
4.7	13×20	13×25	16×25	16×32	16×36	18×36	18×40
6.8	13×25	16×25	16×32	16×36	18×36	18×40	
10	16×25	16×32	16×36	18×36	18×40		
15	16×32	16×36	18×36	18×40			
22	16×36	18×36	18×40				
33	18×36	18×40					
47	18×40						

Note: We can also provide the capacitors according to the customer's request.

Aluminum Electrolytic Capacitor Series

KLS10 - CD81 (TR) (105℃) Series

X

High Temp



Wide temperature range, stable and reliable performances
D⩾8mm equipped with pressure release device.
Be used in DC or pulse circuit under enviroment of high temperature.

Item	Characteristics
Size and its tolerance 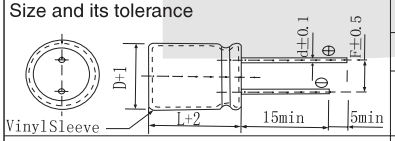	ØD: 5 / 6 / 8 / 10 / 12 / 13 / 16 / 18 / 22 F ± 0.5: 2.0 / 2.5 / 3.5 / 5.0 / 7.5 / 10 d ± 0.1: 0.5 / 0.6 / 0.8
Operating Temp. Range	-40℃～+105℃(10⩽100VDC)　　-25℃～+105℃(160～450VDC)
Rated Working Voltage	10～450VDC
Capacitance Range	1.0～4700μF(+20℃,100 or 120Hz)
Capacitance Tol.	±20%, $^{+30}_{-10}$%(+20℃,100 or 120Hz)
Dissipation Factor tg δ	At +20℃and 100 or 120Hz,for CR>1000μF, tg δ add 0.02 per another 1000μF.

UR (V)	10	16	25	35	50,63	100	160～250	400,450
tg δ	0.22	0.20	0.15	0.12	0.10	0.08	0.16	0.20

Leakage Current IL	⩽0.01·CR·UR or 3μA(⩽100VDC)whichever is greater ⩽0.03·CR·UR + 10μA(⩾160VDC) Measured after 2 minutes application of UR,at+20℃
Load Life	At +105℃, after UR applied for 1000 hours.

△C	±25% of initial measured value
DF(tg δ)	⩽200% of initial specified value
LC(IL)	⩽ initial specified value

Shelf Life	At +105℃,after shelf for 500 hours(without voltage applied) ,then restored for 24 hours at room temp.

△C	±25% of initial measured value
DF(tg δ)	⩽200% of initial specified value
LC(IL)	⩽200% of initial specified value

Frequency Correction Factor for Ripple Current:

UR(VDC)	CR(μF)	Frequency 频率(Hz) 50	100	1K	10K	100K
6.3～100	1.0～10	0.7	1.0	1.6	1.85	2.0
	22～220	0.75	1.0	1.4	1.55	1.6
	330～4700	0.8	1.0	1.15	1.25	1.3
160～450	1.0～220	0.7	1.0	1.4	1.55	1.6

Permissible Ripple Current IR max(+105℃,100Hz,mA rms):

CR \ UR(V) (μF)	10	16	25	35	50	63	100	160	200	250	400	450
1.0					11	11	14	15	16	16	19	20
2.2					18	19	21	24	26	27	30	32
3.3					22	24	28	34	35	38	39	41
4.7					30	33	36	43	47	48	51	55
10			29	37	46	55	60	70	76	80	82	90
22		37	42	51	66	81	108	113	115	124	146	166
33	43	49	58	72	88	101	122	150	156	167	171	184
47	72	78	86	98	116	136	166	190	210	225	243	250
100	93	115	126	153	174	215	256	329	335	365		
220	136	180	230	280	310	388	490	593	628			
330	210	260	320	410	480	560	636					
470	310	360	420	520	650	800	880					
1000	480	600	760	910	1020	1220						
2200	960	1100	1210	1410	1500	1600						
3300	1160	1300	1400	1600	1810							
4700	1400	1510	1750									

Case Size of Standard Prosucts

CR \ UR(V) (μF)	10	16	25	35	50	63	100	160	200	250	400	450
1.0					5×11	5×11	5×12	5×12	6×12	6×12	8×12	8×12
2.2					5×11	5×11	5×12	6×12	8×12	8×12	10×13	10×15
3.3					5×11	5×11	5×12	8×12	8×12	10×13	10×15	10×17
4.7					5×11	5×11	5×12	8×12	10×13	10×13	10×10	10×20
10			5×11	5×11	5×11	5×12	8×12	10×13	10×17	10×17	12×22	13×26
22		5×11	5×11	5×11	5×12	6×12	10×13	10×20	10×20	12×22	16×27	16×31
33	5×11	5×11	5×11	5×12	6×12	8×12	10×13	12×22	12×22	13×26	16×31	16×36
47	5×11	5×11	5×12	6×12	8×12	8×12	10×17	13×22	13×26	16×27	16×36	18×41
100	6×12	6×12	6×12	8×12	10×13	10×15	12×22	16×27	16×31	16×36		
220	6×12	6×12	8×12	8×12	10×17	12×22	16×27	18×36	18×41			
330	8×12	8×13	10×15	10×17	12×22	13×22	16×31					
470	8×14	8×12	10×20	12×22	13×22	16×27	18×36					
1000	10×17	10×11	12×25	13×26	16×27	16×36						
2200	13×22	13×26	13×25	16×31	18×36	22×42						
3300	13×26	16×27	16×31	18×38	22×42							
4700	16×27	16×31	16×32	22×40								

Note:We can also provide the capacitors according to the customer's request.

Aluminum Electrolytic Capacitor Series

KLS10 - CD117 (SH) Series

X



High Precision Stability

Extremely low dissipation factor, high stability.
used in TV gathering focus, oscillation frequency and timer circuts.

Item	Characteristics
Size and its tolerance 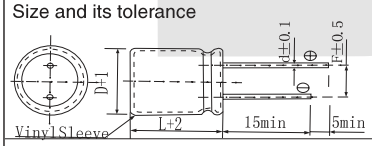	ØD: 6 / 8 / 10 / 13 / 16 / 18 F ± 0.5: 2.5 / 3.5 / 5.0 / 7.5 d ± 0.1: 0.5 / 0.6 / 0.8
Operating Temp. Range	-40℃～+85℃
Rated Working Voltage	10V～50VDC
Capacitance Range	0.47μF～470μF
Capacitance Tol.	±10%,(100Hz,20℃)
Dissipation Factor tg δ	+20℃,100 or 120Hz. UR (V): 10 / 16 / 25 / 35 / 50 tgδ: 0.10 / 0.08 / 0.08 / 0.07 / 0.07
Leakage Current IL	≤0.01·CR·UR or 3μA whichever is greater At +20℃,after 2 minutes application of UR
Load Life	At +85℃ after UR applied for 1000 hours. △C: ±10% of initial measured value DF(tg δ): ≤150% of initial specified value LC(IL): ≤ initial specified value
Shelf Life	At+85℃,after shelf for 500 hours(without voltage applied), then restored for 16 hours at room temp. △C: ±10% of initial measured value DF(tg δ): ≤150% of initial specified value LC(IL): ≤200% of initial specified value

Case Size of Standard Prosucts

CR(μF) \ UR(V)	10	16	25	35	50
0.47					6×12
1.0				6×12	6×12
2.2			6×12	6×12	6×12
3.3		6×12	6×12	6×12	6×12
4.7	6×12	6×12	6×12	8×12	8×12
10	6×12	8×12	10×13	10×13	10×16
22	8×12	10×13	10×16	10×20	10×20
33	10×13	10×16	10×20	13×20	13×20
47	10×16	10×20	13×20	13×25	13×25
100	10×20	13×20	13×25	16×25	16×25
220	13×20	13×25	16×25	16×32	16×36
330	16×25	16×25	16×32		
470	16×36	16×36			

Note:We can also provide the capacitors according to the customer's request.

Aluminum Electrolytic Capacitor Series

KLS10 - AK10 (AN) Series

X

Axial Non-polar

Specialy designed for use in speaker dividiny net work for low ripple current.



Item	Characteristics											
Size and its tolerance 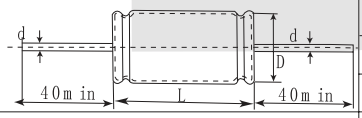	ØD	±0.5			±1.0							
		6	8		10		12		13	16		
	L ± 0.2	16	16	19	19	21	23	26	31	32		
	d ± 0.1	0.6					0.8					
Operating Temp. Range	-40℃～+85℃											
Rated Working Voltage	50～100V											
Capacitance Range	1.0～100μF											
Capacitance Tol.	±20%, ±10%(100Hz)											
Dissipation Factor tg δ	UR(V)	50V			100V							
	100Hz	tg δ ≤0.12			tg δ ≤0.10							
Leakage Current I_L	≤0.03·CR·UR+4μA (After 2 minutes application of UR)											
Load Life	The following specifications shall be satisfied when the capcitors are restored to 25℃ after rated Dc voltage applied for 1000 hours at 85℃ During this test the rated Dc voltage shall be reversed on the capacitor every 125 hours: △C≤±20% of initial value,tg δ ≤150% of specified value,I_L≤specified value.											

Case Size of Standard Prosucts

CR(μF) \ UR(V)	50V	100V
1μF	6×16	6×16
1.5μF	6×16	6×16
2.2μF	6×16	6×16
3.3μF	6×16	8×16
4.7μF	6×16	8×16
6.8μF	6×16	8×19
10μF	8×16	10×19
15μF	8×19	10×21
22μF	10×19	10×24
33μF	12×23	12×26
47μF	12×26	13×31
68μF	12×26	13×31
100μF	13×31	16×32
Note:We can also provide the capacitors according to the customer's request.		

Permissible Ripple Current I_R (mA at 20℃,100Hz):

	1μF	1.5μF	2.2μF	3.3μF	4.7μF	6.8μF	10μF	15μF	22μF	33μF	47μF	68μF	100μF
50V	23	28	28	35	41	50	64	88	106	136	162	215	271
100V	23	28	35	43	52	70	88	119	145	184	220	291	391

Aluminum Electrolytic Capacitor Series

KLS10 - AK20 (AB) Series

X



Axial Bi-polar

Specialy designed for use in speaker dividiny net work for high ripple current.

Item	Characteristics										
Size and its tolerance 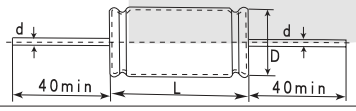	ØD	±0.5			±1.0						
		8	10		12		13	16	18	22	
	L ± 2	16	19	21	23	26	31	32	40	45	
	d ± 0.1	0.6			0.8						
Operating Temp. Range	-40℃ ~ +85℃										
Rated Working Voltage	50 ~ 100V										
Capacitance Range	1.0 ~ 220 μF										
Capacitance Tol.	± 10%(1000Hz)										
Dissipation Factor tg δ	UR(V)	50V			100V						
	1000Hz	tg δ ≤ 0.10									
Leakage Current IL	≤ 0.03·CR·UR+4 μA (After 2 minutes application of UR)										
Load Life	The following specifications shall be satisfied when the capacitors are restored to 25℃ after rated Dc voltage applied for 000 hours at 85℃,During this test the rated Dc voltage shall be reversed on the capacitor every 125 hours:										
	△C	± 20% of initial measured value									
	DF(tg δ)	≤ 150% of initial specified value									
	LC(IL)	≤ initial specified value									

Case Size of Standard Prosucts

CR (μF) \ UR (V)	50V	100V
1 μF	8 × 16	8 × 16
	10 × 19	10 × 19
1.5 μF	8 × 16	8 × 16
	10 × 19	10 × 19
2.2 μF	8 × 16	8 × 16
	10 × 19	10 × 19
3.3 μF	8 × 16	8 × 16
	10 × 19	10 × 19
4.7 μF	8 × 16	8 × 16
	10 × 19	10 × 19
6.8 μF	10 × 19	10 × 19
	12 × 23	12 × 23
10 μF	12 × 23	12 × 23
15 μF	12 × 23	12 × 23
22 μF	12 × 23	12 × 23
	13 × 31	13 × 31
	16 × 32	16 × 32
33 μF	13 × 31	13 × 31
	16 × 32	16 × 32
40 μF	16 × 32	16 × 32
47 μF	16 × 32	16 × 32
68 μF	16 × 32	16 × 32
100 μF	16 × 32	16 × 32
	18 × 40	18 × 40
150 μF	18 × 40	18 × 40
220 μF	18 × 40	18 × 40

Aluminum Electrolytic Capacitor Series

KLS10 - CD11H (GF) Series

X



High frequency low impedance

High frequency, low dissipation factor, low inductance and high ripple current. Load life: 105℃, 2000 hours.

Item	Characteristics										
Size and its tolerance 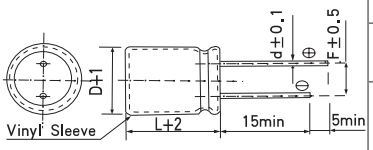	D±1	10	12	16	19	22					
	F ± 0.5	5.0		7.5		10.0					
	d ± 0.1	0.6		0.8		1.0					
Operating Temp. Range	-40℃ ~ +105℃										
Rated Working Voltage	6.3 ~ 250V										
Nominal Capacitance Range	0.47 ~ 6800 μF										
Capacitance Tol.	±20%										
Dissipation Factor tg δ	UR	6.3	10	16	25	35	50	63	100	160	250
	tg δ	0.22	0.19	0.16	0.14	0.12	0.10	0.08	0.08	0.06	0.06
	0.02 is added to every 1000 μF increase over 1000 μF.										
Leakage Current IL	I ≤ 0.03·CR·UR(μA) or 3 μA(whichever is greater) (1 minute)										
Temperature Characteristics (Impedance rotio at 100Hz)	UR(V)	6.3 ~ 10		16 ~ 35		50 ~ 250					
	Z-40℃/Z+20℃	4		3		2					
Load Life	At +105℃ after applying rated voltage for 2000 hours and then resumed 16 hours:										
	△C	≤ ±20% of initial measured value									
	DF(tg δ)	≤ 200% of initial specified value									
	LC(IL)	≤ initial specified value									
Shelf Life	At +105℃ after storage for 1000 hours and then resumed 16 hours:										
	△C	≤ ±20% of initial measured value									
	DF(tg δ)	≤ 200% of initial specified value									
	LC(IL)	≤ 200% of initial specified value									

Note:We can also provide the capacitors according to the customer's request.

KLS electronic
www.cnkls.com

Aluminum Electrolytic Capacitor Series

KLS10 - CD11H (GF) Series



X

Nominal capacitance,rated voltage,impedance,rated ripple current and case size table

UR	6.3			10			16			25			35		
CR	DxL	Z 100KHz	(mA)	DxL	Z 100KHz	(mA)	DxL	Z 100KHz	(mA)	DxL	Z 100KHz	(mA)	DxL	Z 100KHz	(mA)
22													10×16	0.75	85
33										10×16	0.80	28	10×16	0.49	125
47							10×16	0.80	92	10×16	0.55	125	10×20	0.34	160
68				10×16	0.08	97	10×20	0.50	135	10×20	0.36	160	12×20	0.24	230
100	10×16	0.85	99	10×16	0.55	135	10×20	0.35	175	10×20	0.24	245	12×20	0.16	305
150	10×20	0.49	155	10×20	0.35	185	12×20	0.23	260	12×25	0.16	320	12×25	0.12	415
220	10×20	0.30	205	10×20	0.24	270	12×20	0.16	335	12×25	0.11	455	16×25	0.085	580
330	12×20	0.20	310	12×20	0.16	350	16×25	0.12	455	16×25	0.085	610	16×30	0.060	810
470	12×20	0.14	435	12×25	0.12	475	16×25	0.09	615	16×30	0.065	810	16×35	0.046	1130
680	16×25	0.10	605	16×25	0.085	660	16×30	0.065	845	16×30	0.046	1180	16×35	0.036	1370
1000	26×25	0.075	820	16×30	0.060	915	16×35	0.047	1210	19×30	0.036	1430	19×30	0.029	1710
1500	16×35	0.055	1090	19×30	0.045	1290	19×30	0.036	1490	19×40	0.029	1780	22×40	0.024	2120
2200	16×35	0.043	1320	19×30	0.034	1530	19×30	0.028	1800	19×40	0.024	2120			
3300	19×30	0.034	1530	19×35	0.026	1960	19×40	0.023	2160						
4700	19×35	0.028	1890	19×40	0.023	2170									
6800	22×40	0.024	2130												

UR	50			63			100			160			250		
CR	DxL	Z 100KHz	(mA)	DxL	Z 100KHz	(mA)	DxL	Z 100KHz	(mA)	DxL	Z 100KHz	(mA)	DxL	Z 100KHz	(mA)
0.47	10×12	23.0	11				10×12	43.0	8	10×16	64.5	12	10×16	86.0	12
0.1	10×12	00.1	18				10×12	17.0	13	10×16	25.5	17	10×16	34.0	17
1.5	10×12	7.50	22				10×12	10.0	17	10×16	15.0	23	10×16	20.0	25
2.2	10×12	5.00	27				10×12	6.60	21	10×20	9.90	25	10×20	13.2	29
3.3	10×12	3.30	33				10×12	4.10	27	12×25	6.15	36	12×20	8.20	42
4.7	10×12	2.20	40				10×16	1.80	34	12×25	4.20	43	12×20	6.11	50
6.8	10×12	1.80	45				10×20	1.90	41	12×25	2.85	65	12×25	4.22	65
10	10×12	1.40	57	10×16	1.06	67	10×20	1.20	52	12×25	1.80	70	16×25	2.88	88
							10×25								
15	10×16	0.93	72	10×20	0.73	92	12×20	0.81	65	16×30	1.28	120	16×35	1.92	120
22	10×16	0.65	100	10×20	0.52	110	12×20	0.55	122	16×30	0.08	130	16×35	1.30	155
33	10×20	0.43	135	10×20	0.35	170	12×25	0.38	169	16×25	0.58	180	16×35	0.87	190
									252	16×35					
47	10×20	0.30	195	12×20	0.25	215	16×25	0.20	326	19×30	0.41	220	19×30	0.61	230
68	12×20	0.20	255	16×25	0.17	315	16×30	0.21	438	19×30	0.28	260	22×40	0.42	280
100	12×25	0.14	410	16×25	0.12	495	16×30	0.15	553	22×40	0.18	330	22×40	0.34	340
150	16×30	0.10	470	16×30	0.090	665	19×30	0.11	730						
220	16×30	0.075	760	16×30	0.065	835	19×30	0.087	1160						
330	16×30	0.055	995	16×35	0.049	1090	19×35	0.062							
470	19×30	0.044	1190	19×30	0.039	1420									
680	19×30	0.036	1530	22×40	0.032	1700									
1000	19×35	0.030	1830												

impedance — rated ripple current (+105℃,100Hz)

Aluminum Electrolytic Capacitor Series

KLS10 - CD11Z (SZ) Series

X



Middle and High Vol Tage

Medium and high voltage, excellect frequency, used in engergy—saving electronic ballasts, switchrequlated power supplies ect.

Item	Characteristics						
Size and its tolerance 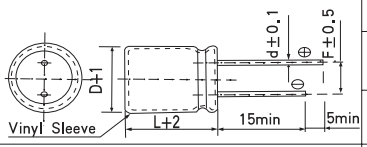	ϕD	±0.5		±1.0			
		6.3	8	10	22	16	19
	F ± 0.5	2.5	3.5	5		7.5	
	d ± 0.1	1.5	0.6	0.6		0.8	
Operating Temp. Range	-40℃～+85℃						
Rated Working Voltage	160～450V						
Nominal Capacitance Range	1～220μF						
Capacitance Tol.	±20%, $^{+30}_{-10}$%						
Dissipation Factor tgδ (20℃, 100Hz)	UR(V)	≤250		≥350			
	tgδ	0.15		0.20			
Leakage Current IL	I≤0.03·CR·UR+10μA (Reading after 1 minute)						
Temperature Characteristics (impedance ratio at 100Hz)	UR(V)	160		>160			
	Z-25℃/Z+20℃	≤4		≤7			
Load Life	At +85℃ after applying rated voltage for 1000 hours and then resumed 16 hours:						
	△C	≤±15% of initial measured value					
	DF(tgδ)	≤150% of initial specified value					
	LC(IL)	≤initial specified value					
Shelf Life	At +85℃ after storage for 500 hours and then resumed 16 hours:						
	△C	≤±15% of initial measured value					
	DF(tgδ)	≤120% of initial specified value					
	LC(IL)	≤200% of initial specified value					

Case Size of Standard Prosucts

DxL (mm) / UR / CR(μF)	160	200	250	350	400	450
1	6.3×12	6.3×12	8×12	8×12	10×12	10×12
2.2	8×12	8×12	10×12	10×16	10×16	10×20
3.3	10×12	10×12	10×16	10×16	10×20	12×20
4.7	10×12	10×16	10×16	10×20	12×20	12×25
10	10×16	10×20	12×20	12×25	12×25	16×25
22	12×20	12×25	13×25	16×25	16×30	16×35
33	12×25	16×25	16×25	16×35		
47	16×25	16×25	16×30	19×40		
100	16×35	19×40	19×40			
220	19×40					

Note:We can also provide the capacitors according to the customer's request.

Aluminum Electrolytic Capacitor Series

KLS10 - CD293 (BZ) Series



X

Standard

Medium and high voltage, standard.

Item	Characteristics				
Size and its tolerance 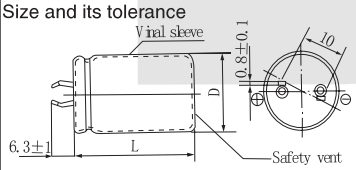	D±1.5	16	22	25	30
	L ± 3	25	30,35,40	40,50	40,50
Operating Temp. Range	40℃～+85℃				
Rated Working Voltage	160～400V				
Nominal Capacitance Range	33～470μF				
Capacitance Tolerance	-10%～50%				
Dissipation Factor tgδ (20℃, 100Hz)	U_R(V)	<350	≥350		
	tgδ	0.18	0.23		
Leakage Current	I≤0.03·C_R·U_R(μA) or 3mA (which is smaller)				
Temperature Characteristics (impedance ratio at 100Hz)	U_R(V)	160	>160		
	Z-25℃/Z+20℃	≤4	≤7		
Load Life	At +85℃ after applying rated voltage with sepecified ripple current for 1000 hours .				
	△C	±15% of initial measured value			
	DF (tgδ)	≤150% of initial specified value or 0.4(which is greater)			
	LC(I_L)	≤ initial specified value			
Shelf Life	At +85℃ after storage for 500 hours then resumed 16 hours				
	△C	±20% of initial measured value			
	DF (tgδ)	≤120% of initial specified value			
	LC(I_L)	≤ 200% of initial specified value			

Nominal Capacitance, Rated Voltage, Surge Voltage and Case Size Table:

DxL(mm) / U_S(V) / U_R(V) / C_R(μF)	160	200	250	315	350	400
	200	250	300	365	400	450
33						22×30
47						22×30
68			16×25	22×30	22×30	22×40
100	22×30	22×30		22×40	22×40	25×40
150	22×30	22×30	22×40	25×40	25×40	25×50
200	25×40	25×40	25×40	25×50	25×50	30×50
		22×35	25×50	30×40	30×50	25×40
330	25×40	25×50	30×40			30×45
470	25×40	30×50				30×50
	25×50					

Note:We can also provide the capacitors according to the customer's request.

Aluminum Electrolytic Capacitor Series

KLS10 - CD60 (QD) Series

X

Large Can Type

More than 30000 times of starting at 55℃.
Bi—poiar, lug terminal type.
For staring AC motor.



Characteristice

Item	Characteristics
Rated Working Voltage	110～220VAC
Operating Temp. Range	-10℃～+55℃
Capacitance Tol.	±20%(20℃,50/60Hz)
Dissipation Factor tg δ	≤0.10(20℃,50/60Hz)
Load Characteristic	85% of the maximum voltage is spplied to the capacitors for 1 sec every minute at +55℃,After repeating the bove test 30000 tims,the follwing specifications shall be satisfied when the capacitors are restored to 20℃. Capactiance Change: Within ±15% of the initial value Dissipation Factor tan δ: Not more than 0.20

Standard Ratings

Rated Voltage UR(V)	110	125	160	220
Rated Voltage UACmax (V)	138	156	200	265
CR (μF)	DxL(mm)			
50	—	—	30×80	35×80
75	30×60	30×60	30×80	42×80
100	30×60	30×80	35×80	42×100
150	30×80	35×80	42×80	42×120
200	35×80	35×80	42×100	50×120
300	42×80	42×100	42×120	—
400	42×100	42×120	—	—

Dimensions

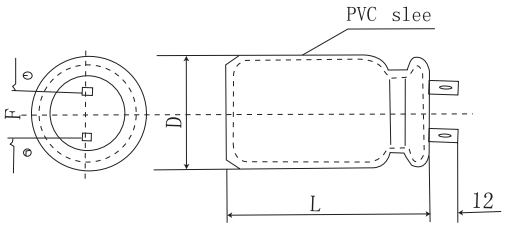

D±0.5	30		35	42		50
L±2	60	80	80	80	100	120	120
F±0.1	10		10	15		35

Note:We can also provide the capacitors according to the customer's request.

Aluminum Electrolytic Capacitor Series

KLS10 - CD13N (PK) Series



X

High Ripple Current

Used for storing energy of electric welder and in UPS air conditioners etc.
High valtage' large capacitance high ripple current and the device of pressure release.

Item	Characteristics				
Size and its tolerance 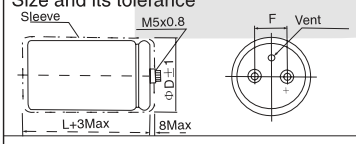	D ± 1	35	50	65	80
	L + 3	80～100	80～120	100～120	100～160
	F ± 1	12.0	21.5	26.5	32.6
Operating Temp. Range	-40℃～+85℃		-25℃～+85℃		
Rated Working Voltage	160～250V		350～450V		
Nominal Capacitance Range	220～15000μF				
Capacitance Tol.	-10%～+30%				
Leakage Current I_L	$I \leqslant 0.02 \cdot C_R \cdot U_R$(μF) or 5mA				
Dissipation Factor tgδ	tanδ ≤0.25				
Load Life	At +85℃ after applying rated voltage for 1000 hours and then resumed 16 hours:				
	△C	≤±15% of initial measured value			
	DF(tgδ)	≤175% of initial specified value			
	LC(I_L)	initial specified value			
Shelf Life	At +85℃ after storage for 500 hours and then resumed 16 hours:				
	△C	≤±15% of initial measured value			
	DF(tgδ)	≤175% of initial specified value			
	LC(I_L)	≤200% of initial specified value			

U_R(V)	160		200		250		350		400		450	
Item / C_R(μF)	DxL (mm)	Rated ripple current (A)	DxL (mm)	Rated ripple current (A)	DxL (mm)	Rated ripple current (A)	DxL (mm)	Rated ripple current (A)	DxL (mm)	Rated ripple current (A)	DxL (mm)	Rated ripple current (A)
220									35×80	1.5	35×80	0.86
330									35×100	1.9	35×100	1.1
470							35×80	1.5	50×80	2.3	50×80	1.4
680			35×80	1.7	35×80	1.5	35×100	1.8	50×100	2.5	50×100	1.8
1000	35×80	1.7	35×100	1.9	35×100	1.9	50×80	2.3	50×120	2.8	65×100	2.4
1500	35×100	2.3	50×80	2.5	50×100	2.5	50×120	3.0	65×120	3.1	80×120	3.1
2200	50×80	2.9	50×100	3.2	50×120	3.5	65×100	3.9	80×100	3.8	80×140	4.0
3300	50×100	3.8	50×120	4.1	65×120	4.7	80×120	5.3	80×140	5.1	80×160	5.4
4700	50×120	4.8	65×120	5.2	80×120	5.7	80×140	7.0	80×160	6.7		
8800	65×120	6.3	80×140	6.6	80×150	7.3						
10000	80×100	7.8	80×160	8.6								
15000	80×160	10.6										

Aluminum Electrolytic Capacitor Series

KLS10 - CD21S (PS) Series



X

Low leakage current, low dissipation factor and small body
Used in flash lamp circuits in camera

Item	Characteristics									
Size and its tolerance 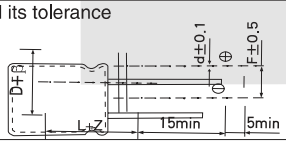	ØD	10	13	14.5	16	17	18	20	22	⩾ Ø8 with safety vent
	F ± 0.5	5.0		7.5				10		
	Ød ± 0.1	0.6		0.8						PVC sleeve
	α	1.5							2.0	
	β	0.8							10	
Operating Temp. Range	-20~+55°C									
Rated Working Voltage	330Vdc									
Capacitance Range	20μF~370μF									
Capacitance Tol.	-10%~+20%(100Hz.20°C)									
(20°C) Leakage current	I≤CR(μA) 1分钟 1minute									
	I:Leakage current CR:Ratet capacitance									
Dissipation Factor	(V)Rated voltage(v)	330								100Hz 20°C
	tgδ(MAX)	0.06								
temerature characteristics (impedance ratio at 100Hz)	(V)Rated voltage(v)	330								100Hz
	Z-20°C/Z+20°C	2								
Endurance	Charge and discharge at rated voltage at room temperature(+5℃-35℃) in every 30seconds for 5000times with discharge resistance of 0.7-1.0Ω Capacitance change: initial measured value ±10% Leakage current: initial specified value ⩽150% Dissipation factor: initial specified value ⩽150%									
Shelf Life	After storage for 500 hours at 70% then rasumed 16 hours Capacitance change: initial measured value ±10% Leakage current: initial specified value ⩽300% Dissipation factor: initial specified value ⩽150%									

Case Size of Standard Prosucts

WV(V) / CR(μF)		330 VDC							
		2U							
		Ø10	Ø13	Ø14.5	Ø16	Ø17	Ø18	Ø20	Ø16
20	200	10×25	13×20						
40	400	10×30	13×25						
60	600		13×30	14.5×25					
80	800		13×35	14.5×30	16×25				
100	101			14.5×36	16×30	18×28			
120	121				16×36	18×33	18×30		
140	141				16×40	18×37	18×34	20×30	22×28
160	161					18×39	18×36	20×32	22×28
180	181					18×39	18×36	20×32	22×32
200	201					18×48	18×40	20×34	22×36
240	241						18×40	20×40	22×45
370	371								

Note:We can also provide the capacitors according to the customer's request.

X

Aluminum Electrolytic Capacitor Series

KLS10 - CD294 (SK) Series



Load life of 2000 hours at 105℃
High ripple current
Smaller Size
PCB Mounting

SPECIFCATIONS

Item	Characteristics
Operating Temperature Range(℃)	-40℃ - + 105℃
Capacitance Tolerance(25℃,120Hz)	± 20%
Leakage Current(μ A)	0.01CV or 1.2mA whichever is smaller.(at 25℃,after 5 minutes) C:Nominal Capacitance(μ F)V:Rated Voltage(V)
Dissipation Factor(25℃,120Hz)	<table><tr><td>Rated Voltage(V)</td><td>10</td><td>16</td><td>25</td><td>35</td><td>50</td><td>63~100</td><td>160~200</td><td>250~400</td></tr><tr><td>tanδ</td><td>0.45</td><td>0.35</td><td>0.30</td><td>0.25</td><td>0.20</td><td>0.15</td><td>0.12</td><td>0.15</td></tr></table>
Temperature Stability(120Hz)	<table><tr><td colspan="2">Rated Voltage(V)</td><td>10,16</td><td>25</td><td>35</td><td>50,63</td><td>80,100</td><td>160~200</td><td>250~400</td></tr><tr><td rowspan="2">Impedance Ratio</td><td>Z-25℃/Z+20℃</td><td>4</td><td>3</td><td>3</td><td>2</td><td>2</td><td>3</td><td>4</td></tr><tr><td>Z-40℃/Z+20℃</td><td>15</td><td>10</td><td>8</td><td>6</td><td>5</td><td>6</td><td></td></tr></table>
Load Life(+105℃)	<table><tr><td>Time</td><td>2000 hours</td></tr><tr><td>Leakage Current</td><td>Not more than the specified value.</td></tr><tr><td>Capacitance Change</td><td>Within + 20% of the initial value.</td></tr><tr><td>Dissipation Factor</td><td>Not more than 200% of the specified value.</td></tr></table>
Shelf Life(+105℃)	500 hours.No voltage applied.After test:U,to be applied for 60 minutes,24 to 48 hours before measurement.

DIMENSION

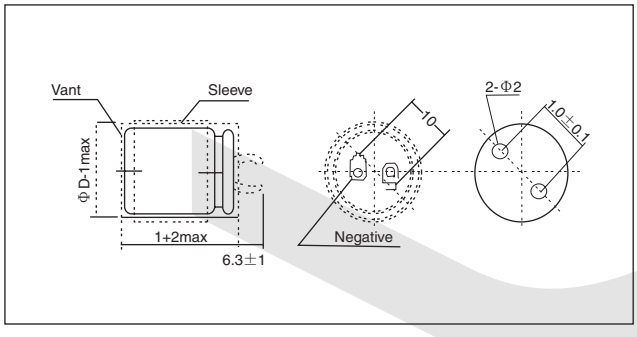

MULTIPLIER FOR RIPPLE CURRENT

Frequency coefficient

Rated Voltage(V) \ Freq(Hz)	50	120	1K	10K	20K
≤50	0.95	1	1.10	1.15	1.15
6.3~100	0.95	1	1.16	1.30	1.33
≥160	0.90	1	1.20	1.50	1.55

Temperature coefficient

Temperature(℃)	+40	+55	+70	+85	+105
Factor	2.7	2.5	2.1	1.7	1.0

Aluminum Electrolytic Capacitor Series

KLS10 - CD294 (SK) Series Case Size of Standard Products

X

ALUMINUM ELECTROLYTIC CAPACITORS

STANDARD RATINGS

WV(V) / φD×L(mm)	10		16		25		35		50		63		80		100	
	Cap	Ripple	Cap	Ripple	Cap	Ripple	Cap	Ripple	Cap	Ripple	Cap	Ripple	Cap	Ripple	Cap	Ripple
	uF	mArms	uF	mArms	uF	mArms	uF	mArms	uF	mArms	uF	mArms	uF	mArms	uF	mArms
22×25	6800	1.5	4700	1.4	3300	1.3	2200	1.1	1200	0.96	820	0.92	560	0.76	390	0.64
22×30	10000	1.9	6800	1.8	4700	1.6	2700	1.3	1800	1.2	1200	1.2	820	0.96	560	0.80
22×35	12000	2.1	8200	2.0	5600	1.8	3900	1.6	2200	1.4	1500	1.3	1000	1.1	680	0.92
22×40	15000	2.5	10000	2.3	6800	2.0	4700	1.9	2700	1.6	1800	1.5	1200	1.2	820	1.0
22×50	18000	2.8	15000	2.9	10000	2.6	6800	2.4	-	-	2200	1.7	1800	1.6	1200	1.3
25×25	8200	1.7	6800	1.8	4700	1.6	3300	1.3	1800	1.2	1200	1.1	820	0.96	560	0.80
25×30	12000	2.1	10000	2.2	5600	1.8	3900	1.6	2700	1.5	1500	1.3	1000	1.1	680	0.92
25×35	15000	2.5	12000	2.5	8200	2.2	5600	2.0	3300	1.8	1800	1.5	1500	1.4	1000	1.1
25×40	18000	2.8	15000	2.9	10000	2.6	6800	2.3	-	-	-	-	1800	1.6	-	-
25×50	-	-	18000	3.3	12000	2.9	8200	2.7	5600	2.5	3300	2.2	2200	1.8	1500	1.5
30×25	12000	2.2	10000	2.3	6800	2.0	4700	1.9	2700	1.6	1500	1.4	1200	1.3	820	1.0
30×30	18000	2.8	12000	2.6	8200	2.3	5600	2.1	3300	1.8	2200	1.7	1500	1.5	1000	1.2
30×35	22000	3.2	18000	3.3	12000	2.9	8200	2.9	4700	2.3	2700	2.0	1800	1.6	1200	1.4
30×40	-	-	22000	3.7	15000	3.3	10000	3.0	5600	2.5	3300	2.3	2200	1.9	1500	1.6
30×50	-	-	-	-	18000	3.8	12000	3.4	6800	2.9	4700	2.8	3300	2.3	2200	2.0
35×25	15000	2.6	12000	2.7	8200	2.4	5600	2.2	3300	1.8	2200	1.8	1500	1.5	1000	1.3
35×30	22000	3.3	18000	3.4	12000	3.0	8200	2.8	4700	2.4	2700	2.1	2200	1.9	1200	1.4
35×35	-	-	22000	3.9	15000	3.5	10000	3.1	5600	2.7	-	-	2700	2.2	1800	1.8
35×40	-	-	-	-	18000	3.9	12000	3.5	6800	3.0	4700	2.9	3300	2.4	2200	2.0
35×50	-	-	-	-	-	-	18000	4.5	10000	3.8	6800	3.6	4700	3.2	2700	2.3

WV(V) / φD×L(mm)	160		180		200		250		315		350		400	
	Cap	Ripple	Cap	Ripple	Cap	Ripple	Cap	Ripple	Cap	Ripple	Cap	Ripple	Cap	Ripple
	uF	mArms	uF	mArms	uF	mArms	uF	mArms	uF	mArms	uF	mArms	uF	mArms
22×25	180	0.65	180	0.65	150	0.60	100	0.45	56	0.34	56	0.37	39	0.32
22×30	270	0.83	220	0.75	220	0.76	150	0.58	82	0.43	82	0.47	56	0.39
22×35	330	0.94	270	0.86	270	0.87	180	0.65	120	0.53	100	0.53	68	0.45
22×40	390	1.1	390	1.1	330	0.99	220	0.75	150	0.61	120	0.60	82	0.51
22×50	560	1.3	470	1.2	470	1.2	330	0.96	180	0.71	180	0.78	120	0.64
25×25	270	0.82	220	0.75	220	0.76	150	0.58	82	0.42	68	0.43	56	0.40
25×30	390	1.1	330	0.96	270	0.87	220	0.73	120	0.53	100	0.54	68	0.48
25×35	470	1.2	390	1.1	390	1.1	270	0.83	150	0.62	120	0.61	100	0.57
25×40	560	1.3	470	1.2	470	1.3	330	0.95	-	-	180	0.77	120	0.63
25×50	820	1.7	680	1.5	560	1.4	470	1.2	270	0.89	220	0.89	150	0.75
30×25	390	1.1	330	1.0	270	0.92	220	0.77	120	0.56	100	0.57	82	0.53
30×30	560	1.3	470	1.2	390	1.1	270	0.88	180	0.71	150	0.72	100	0.61
30×35	680	1.5	560	1.4	560	1.4	390	1.1	220	0.80	180	0.82	150	0.77
30×40	620	1.7	680	1.6	680	1.6	470	1.2	270	0.92	220	0.93	180	0.87
30×50	1000	2.0	1000	2.0	820	1.8	560	1.4	390	1.2	330	1.2	220	1.0
35×25	470	1.3	390	1.2	390	1.2	270	0.93	180	0.74	150	0.77	100	0.65
35×30	680	1.6	560	1.5	560	1.5	390	1.2	220	0.84	220	0.97	150	0.83
35×35	820	1.8	820	1.8	680	1.7	470	1.3	330	1.1	270	1.1	180	0.93
35×40	1000	2.0	1000	2.1	820	1.9	560	1.5	390	1.2	330	1.3	220	1.1
35×50	1500	2.6	1200	2.4	1200	2.4	820	1.9	470	1.4	470	1.6	330	1.3

Note:We can also provide the capacitors according to the customer's request.

Aluminum Electrolytic Capacitor Series

X

Export Packing Detail

Case size	Plastic Bag Capacity	Small Box Capacity		Carton Box Capacity		Small Box Size			Carton Box Size		
ΦD×L(mm)	pcs./per bag	Bag/per small box	pcs./per small box	small box/ per carton box	pcs./per carton box	L (mm)	H (mm)	W (mm)	L (mm)	H (mm)	W (mm)
4×7	1000	50	50,000	2	100,000	320	320	235	500	350	330
5×7	1000	40	40,000	2	80,000	320	320	235	500	350	330
6×7	1000	25	25,000	2	50,000	320	320	235	500	350	330
5×11	1000	25	25,000	2	50,000	320	320	235	500	350	330
5×12	1000	25	25,000	2	50,000	320	320	235	500	350	330
6×11	1000	20	20,000	2	40,000	320	320	235	500	350	330
6×12	1000	20	20,000	2	40,000	320	320	235	500	350	330
8×12	500	20	10,000	2	20,000	320	320	235	500	350	330
8×14	500	20	10,000	2	20,000	320	320	235	500	350	330
10×15	250	24	6,000	2	12,000	320	320	235	500	350	330
10×17	250	20	5,000	2	10,000	320	320	235	500	350	330
10×20	250	20	5,000	2	10,000	320	320	235	500	350	330
12×20	200	15	3,000	2	6,000	320	320	235	500	350	330
13×20	100	25	2,500	2	5,000	320	320	235	500	350	330
13×26	100	25	2,500	2	5,000	320	320	235	500	350	330
16×25	100	15	1,500	2	3,000	320	320	235	500	350	330
16×30	50	25	1,250	2	2,500	320	320	235	500	350	330
16×35	50	20	1,000	2	2,000	320	320	235	500	350	330
18×35	50	20	1,000	2	2,000	320	320	235	500	350	330
18×40	50	15	750	2	1,500	320	320	235	500	350	330
22×30	25	20	500	2	1,000	320	320	235	500	350	330
22×40	25	20	500	2	1,000	320	320	235	500	350	330
22×50	25	20	500	2	1,000	300	300	230	480	320	320

X

Film Capacitors Series

Polypropylene Film Capacitor-Non Inductive Radial Type: PPN-CBB13

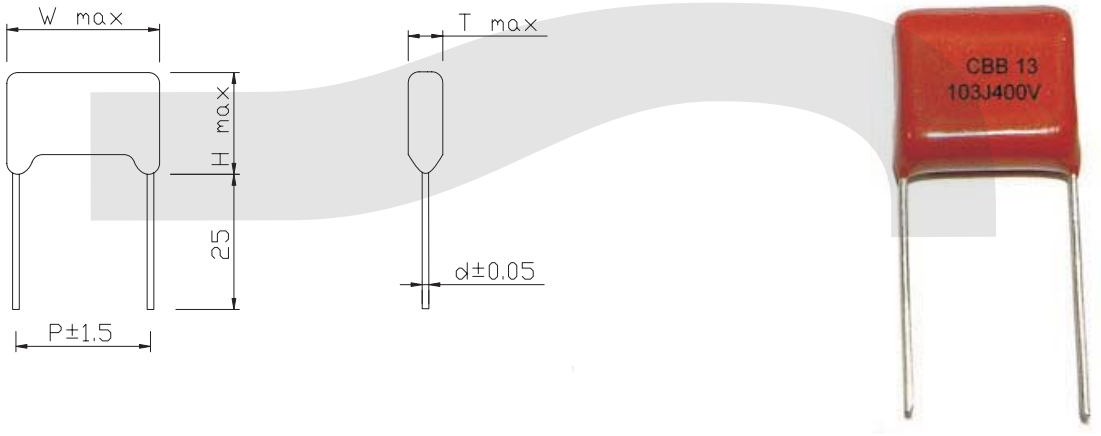

Construction

Dielectric	Polypropylene Film
Electrodes	Aluminum Metalaization
Winding	Non-inductive type
Leads	Tinned Wire
Outer coating	Flame retarding epoxy resin

Features

Excellent frequency and temperature characteristics
Very small loss even at high frequency
Epoxy resin coating, high mechanical strength and humidity resistance
Widely used in high frequency, high voltage, DC and pulse circuits

Specifications

Reference Standard:	GB 10188 (IEC60384-13)
Rated Voltage:	100Vdc,160Vdc,250Vdc,400Vdc,630Vdc
Rated temperature:	+85°C
Operating Temperature Range:	-40°C~+85°C
Capacitance Range:	0.001μF~0.33μF
Capacitance Tolerance :	±5%(J);±10%(K);±20%(M);
Dissipation Factor:	≤0.005, 1000PF <C_R ≤0.1μF (20°C , 1KHz) ≤0.001, C_R >0.1μF or C_R ≤1000PF
Insulation Resistance:	R≥30000MΩ, C_R ≤0.1μF (20°C , 1min) R≥3000s, C_R>0.1μF
Voltage Proof:	2.2U_R (5s)

ORDER INFORMATION

Product No.: KLS10 - CBB13 - XX - XX - X - XX

- Feet away from the
- Capacitance Tolerance
- Capacity
- Rated Voltage
- Polypropylene Film Capacitor-Non Inductive Radial (PPN)
- Pos.No.

X

Film Capacitors Series

Metallized Polypropylene Film Capacitor-Axial Type: MPT-CBB20

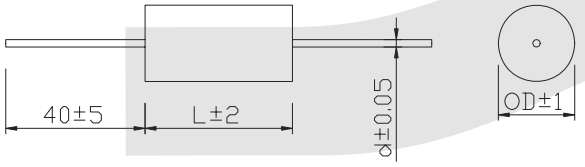

D	dØ
<8mm	0.6mm
>8mm	0.8mm



Construction

Dielectric	Polypropylene Film
Electrodes	Aluminum Metalaization
Winding	Non-inductive type
Leads	Tinned clad copper wire or Tinned Wire
Outer coating	Insulating tape wrapping and epoxy resin end filled

Features

Small size and light weight
Long life due to self-healing effect
Wrapped with polyester adhesive tape and ends filled

Specifications

Reference Standard:	GB 10190 (IEC60384-16)
Rated Voltage:	250VDC,400VDC,630VDC
Rated temperature:	+85°C
Operating Temperature Range:	-40°C~+85°C
Capacitance Range:	0.001μF~10μF
Capacitance Tolerance :	±5%(J);±10%(K);
Dissipation Factor:	0.1% Max (20°C , 1KHz)
Insulation Resistance:	R≥30000MΩ, C_R ≤0.33μF
	R≥10000S, C_R >0.33μF (20°C , 1min)
Voltage Proof:	1.5U_R (5s)

ORDER INFORMATION

Product No.: KLS10 - CBB20 - XX - XX - X - XX

- Feet away from the
- Capacitance Tolerance
- Capacity
- Rated Voltage
- Metallized Polypropylene Film Capacitor-Axial (MPT)
- Pos.No.

Film Capacitors Series

X

Metallized Polypropylene Film Capacitor-Axial Type: MPT-CBB20

MPT Dimensions Size unit:mm

Cap. (uF)

R. V.	250VDC		400VDC		630VDC	
Size	L	OD	L	OD	L	OD
Cap.	Max	Max	Max	Max	Max	Max
0. 01					14	7
0. 015					14	7
0. 022					14	8
0. 033			14	8	19	8
0. 047			14	8	19	9
0. 068			19	8	19	11
0. 1	14	8	19	9	27	11
0. 15	19	8	19	10	27	13
0. 22	19	9	27	10	33	13
0. 33	19	11	27	12	33	16
0. 47	25	11	27	13	33	18
0. 68	25	13	33	15	33	20
1	25	13	33	17	38	21
1. 5	33	15	33	21	44	22
2. 2	33	17	38	22	44	27
3. 3	33	19	44	26		
4. 7	38	21				
6. 8	44	23				
10	44	26				

- The above dimensions are for reference only. The final dimensions are subject to our specifications.

ORDER INFORMATION

Product No.: KLS10 - CBB20 - XX - XX - X - XX

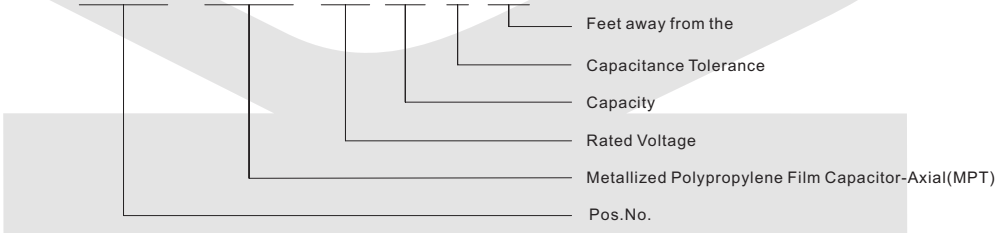

Film Capacitors Series

Metallized Polypropylene Film Capacitor-Axial Type: MPA-CBB20

X

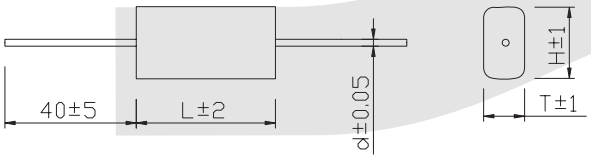

D	dØ
<8mm	0.6mm
>8mm	0.8mm



MPA Dimensions Size unit:mm

R. V.	250VDC			400VDC			630VDC		
Size	L	H	T	L	H	T	L	H	T
Cap.	Max	Max	Max	Max	Max	Max	Max	Max	Max
0. 01									
0. 015							14	10	6
0. 022							14	10	6
0. 033							19	12	7
0. 047				14	12	7	19	13	8
0. 068				19	12	7	19	14	9
0. 1	14	12	7	19	12	8	27	13	8
0. 15	19	11	6	19	15	9	27	16	9
0. 22	19	11	7	27	15	8	33	17	11
0. 33	19	13	8	27	16	10	33	20	13
0. 47	27	15	9	33	16	10	33	22	15
0. 68	27	16	10	33	18	11	33	23	16
1	33	18	10	33	21	14	38	25	17
1. 5	33	20	13	33	24	16	44	32	21
2. 2	33	20	14	38	30	15	44	37	23
3. 3	33	24	16	44	38	18			
4. 7	38	25	16						
6. 8	44	32	16						
10	44	38	18						

ORDER INFORMATION

Product No.: KLS10 - CBB20 - XX - XX - X - XX

- Feet away from the
- Capacitance Tolerance
- Capacity
- Rated Voltage
- Metallized Polypropylene Film Capacitor-Axial (MPA)
- Pos.No.

X

Film Capacitors Series

Metallized Polypropylene Film Capacitor Type: MPP-CBB21

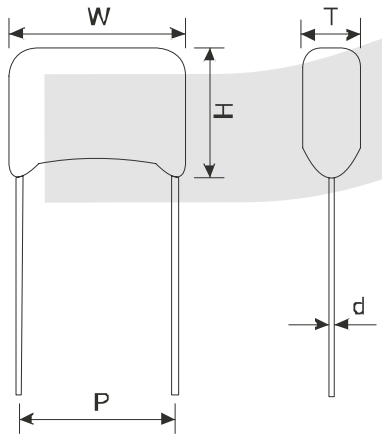



Construction

Dielectric Polypropylene Film
Electrodes Aluminum Metalaization
Winding non-inductive type
Leads Tinned Wire
Outer coating Flame retarding epoxy resin

Features

Very low loss at high frequency, suitable for higher current
Very small inherent temperature rise
Suitable for S-correction of color TVs which require small size and excellent performance
High insulation resistance, excellent self-healing properties
Widely used in DC, pulse, high frequency and large current circuits

Specifications

Reference Standard:	GB 10190 (IEC60384-16)
Rated Voltage:	200Vdc,250Vdc,400Vdc,630Vdc
Rated temperature:	+85ºC
Operating Temperature Range:	-40ºC~+85ºC
Capacitance Range:	0.01μF~3.3μF
Capacitance Tolerance :	±5%(J);±10%(K);±20%(M);
Dissipation Factor:	≤0.001 (20ºC , 1KHz)
Insulation Resistance:	R≥25000MΩ, C_R≤0.33μF (20ºC , 1min) R≥7500s, C_R>0.33μF
Voltage Proof:	2U_R (5s)

ORDER INFORMATION

Product No.: KLS10 - CBB21 - XX - XX - X - XX

- Feet away from the
- Capacitance Tolerance
- Capacity
- Rated Voltage
- Product Name:Metallized Polypropylene Film Capacitor (MPP)
- Pos.No.

Film Capacitors Series

X

Metallized Polypropylene Film Capacitor Type: MPP-CBB21

MPP Dimensions(mm)

Cap. (uF)

Size unit:m/m

R. V.	50/100VDC					250VDC					400VDC					630VDC				
Size	W	H	T	P	d	W	H	T	P	d	W	H	T	P	d	W	H	T	P	d
Cap.	Max	Max	Max	1	0.05	Max	Max	Max	1	0.05	Max	Max	Max	1	0.05	Max	Max	Max	1	0.05
0.0068											11	9	6	7.5	0.6	13	10	6	10	0.6
0.01						11	9	6	7.5	0.6	11	9	6	7.5	0.6	13	12	7	10	0.6
0.015						11	10	6	7.5	0.6	11	9	6	7.5	0.6	13	12	8	10	0.6
0.022	11	10	6	7.5	0.6	13	10	6	10	0.6	13	10	6	10	0.6	13	14	9	10	0.6
0.027	11	10	6	7.5	0.6	13	10	6	10	0.6	13	10	6	10	0.6	13	14	9	10	0.6
0.033	11	10	6	7.5	0.6	13	10	6	10	0.6	13	11	7	10	0.6	19	14	8	15	0.8
0.047	13	11	6	10	0.6	13	10	6	10	0.6	13	13	8	10	0.6	19	15	9	15	0.8
0.068	13	11	6	10	0.6	13	11	6	10	0.6	19	13	7	15	0.8	19	16	10	15	0.8
0.1	13	11	7	10	0.6	19	11	7	15	0.8	19	14	8	15	0.8	24	18	11	20	20
0.15	19	12	7	15	0.8	19	12	7	15	0.8	19	16	9	15	0.8	24	19	12	20	20
0.22	19	12	7	15	0.8	19	13	7	15	0.8	24	15	9	20	0.8	31	19	12	27.5	27.5
0.33	19	12	8	15	0.8	19	15	8	15	0.8	24	18	11	20	0.8	31	22	15	27.5	27.5
0.47	19	14	8	15	0.8	24	14	8	20	0.8	31	19	12	27.5	0.8	31	24	15	27.5	27.5
0.82	19	16	9	15	0.8	24	16	10	20	0.8	31	21	14	27.5	0.8	35	29	16	32.5	1
1	24	18	11	20	0.8	31	17	10	27.5	0.8	31	25	16	27.5	0.8	42	31	18	37.5	1
1.5	31	18	11	27.5	0.8	31	19	12	27.5	0.8	35	26	18	32.5	1	42	35	22	37.5	1
2.2	31	19	13	27.5	0.8	31	22	15	27.5	0.8	42	30	18	37.5	1	42	40	26	37.5	1
3.3	31	22	15	27.5	0.8	31	26	17	27.5	0.8	42	38	22	37.5	1					
4.7	35	24	14	32.5	1	35	28	20	32.5	1										
6.8	42	30	17	37.5	1	42	33	19	37.5	1										
10	42	33	19	37.5	1	42	38	22	37.5	1										

- The above dimensions are for reference only. The final dimensions are subject to our specifications.

ORDER INFORMATION

Product No.: KLS10 - CBB21 - XX - XX - X - XX

- Feet away from the
- Capacitance Tolerance
- Capacity
- Rated Voltage
- Product Name:Metallized Polypropylene Film Capacitor (MPP)
- Pos.No.

Film Capacitors Series

X

Polypropylene Film Capacitor-Non Inductive Radial Type: PPN-CBB13

PPN Dimensions
Cap. (uF)

Size unit:mm

R. V.	50/100VDC					250VDC					400VDC					630VDC				
Size	W	H	T	P	d	W	H	T	P	d	W	H	T	P	d	W	H	T	P	d
Cap.	Max	Max	Max	1	0. 05	Max	Max	Max	1	0. 05	Max	Max	Max	1	0. 05	Max	Max	Max	1	0. 05
0. 001	11	9	5	7. 5	0. 6	11	9	5	7. 5	0. 6	11	9	6	7. 5	0. 6	11	10	6	7. 5	0. 6
0. 0015	11	9	6	7. 5	0. 6	11	9	6	7. 5	0. 6	11	9	6	7. 5	0. 6	11	10	6	7. 5	0. 6
0. 0022	11	9	6	7. 5	6	11	9	6	7. 5	0. 6	11	9	6	7. 5	0. 6	11	10	7	7. 5	0. 6
0. 0033	11	9	6	7. 5	0. 6	11	9	6	7. 5	0. 6	11	10	6	7. 5	0. 6	14	11	7	10	0. 6
0. 0047	11	10	6	7. 5	0. 6	11	10	7	7. 5	0. 6	11	11	7	7. 5	0. 6	14	12	7	10	0. 6
0. 0068	11	10	6	7. 5	0. 6	11	10	7	7. 5	0. 6	14	10	7	10	0. 8	19	13	8	15	0. 8
0. 01	11	10	7	7. 5	0. 6	11	10	7	7. 5	0. 6	14	12	8	10	0. 8	20	13	8	15	0. 8
0. 015	14	10	7	10	0. 6	14	10	7	10	0. 6	14	14	8	10	0. 8	20	15	8	15	0. 8
0. 022	14	10	7	10	0. 6	14	12	7	10	0. 6	19	12	8	15	0. 8	21	17	9	16	0. 8
0. 033	19	12	7	15	0. 8	19	12	7	15	0. 8	19	14	9	16	0. 8	21	19	11	16	0. 8
0. 047	19	12	7	15	0. 8	19	13	8	15	0. 8	20	16	10	16	0. 8	26	18	12	21	0. 8
0. 068	19	12	7	15	0. 8	19	14	9	15	0. 8	26	17	9	21	0. 8	31	19	11	27. 5	0. 8
0. 1	19	15	9	16	0. 8	20	16	10	16	0. 8	26	19	11	21	0. 8	31	22	13	27. 5	0. 8
0. 15	26	15	8	21	0. 8	26	18	11	21	0. 8	26	21	14	21	0. 8	31	26	16	27. 5	0. 8
0. 22	26	18	10	21	0. 8	26	21	13	21	0. 8	31	22	15	27. 5	0. 8	31	28	16	27. 5	0. 8
0. 33	31	18	10	27. 5	0. 8	31	21	13	27. 5	0. 8	31	26	19	27. 5	0. 8					
0. 47	31	20	12	27. 5	0. 8	31	24	16	27. 5	0. 8										

- The above dimensions are for reference only. The final dimensions are subject to our specifications.

ORDER INFORMATION

Product No.: KLS10 - CBB13 - XX - XX - X - XX

- Feet away from the
- Capacitance Tolerance
- Capacity
- Rated Voltage
- Polypropylene Film Capacitor-Non Inductive Radial(PPN)
- Pos.No.

X

Film Capacitors Series

Metallized Polypropylene Film AC Motor Capacitor Type: CBB61

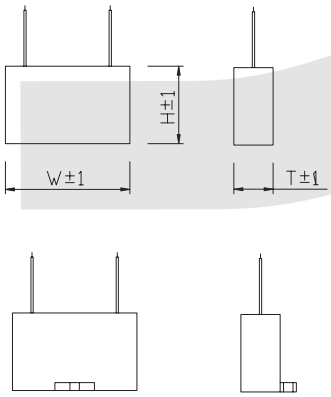

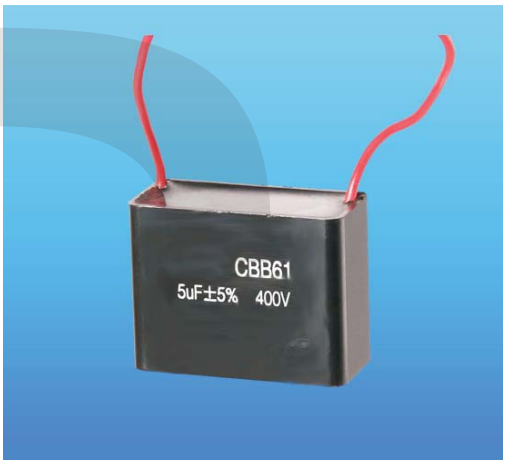

Construction

DIELECTRIC: Polypropylene/Polyester film
ELECTRODES: Vacuum evaporated metal
COATING: Encapsulated in reinforced flame retardant plastic case sealed with epoxy resin meeting the requirement of UL94V-0
LEADS: Radial leads of tinned wire/insulation flexible

Features & APPLICATION

Non-inductive construion
Self-healing property
High current endurability(up to 20A) and special termination for high current
Applicable for air conditioners, ventilator, electric fan, AC one-phase motors, fluorescent lamps, merury lamps, transformer etc.
Used for starting, running and correcting power factor

Specifications

Reference Standard:	GB/T 3667-1997 UI810 (IEC60252-1)	
Rated Voltage:	250VAC-450VAC	
Rated temperature:	+70°C	
Operating Temperature Range:	-40°C~+70°C	
Capacitance Range:	1μF~10μF	
Capacitance Tolerance :	±5%(J);±10%(K)	
Dissipation Factor:	≤0.0005 (20°C , 100Hz)	
Insulation Resistance:	T-T:3000MΩ (20°C , 1min)	T-C:1000MΩ
Voltage Proof:	T-T: 1.75U_R (10s)	T-C: 2000VAC (60s)

ORDER INFORMATION

Product No.: KLS10 - CBB61 - XX - XX - X - XX

- Feet away from the
- Capacitance Tolerance
- Capacity
- Rated Voltage
- Product Name: Metallized Polypropylene Film AC Motor Capacitor
- Pos.No.

Film Capacitors Series

X

Metallized Polypropylene Film AC Motor Capacitor Type: CBB61

Dimensions(mm)

Rated Cap. (μF)	250Vac			450Vac		
	Wmax	Hmax	Tmax	Wmax	Hmax	Tmax
1.0	37	26	12	37	23	14
1.5	37	28	16	37	23	14
2.0	37	28	16	37	28	14
2.5	37	30	20	37	30	18
3.0	37	30	20	48	29.5	19
4.0	47	38	18	47	34	18
5.0	47	34	20	47	34	20
6.0	47	38	26	47	38	26
8.0	47	38	26	47	38	26
10.0	58	44	30	58	44	30

- The above dimensions are for reference only. The final dimensions are subject to our specifications.

Approvals

c UL us	USA/CSA E249178	UL810 CSA c22.2 No.190
VDE	EC 40012139 40012189	EN60252-1
CB	CN4643 CN4642 CN3786	IEC-60252-1
CQC	China CQC CQC 03002008544 CQC 04002010183 CQC 04002010184	GB 3667-1997 IEC-60252-1

ORDER INFORMATION

Product No.: KLS10 - CBB61 - XX - XX - X - XX

- Feet away from the
- Capacitance Tolerance
- Capacity
- Rated Voltage
- Product Name: Metallized Polypropylene Film AC Motor Capacitor
- Pos.No.

X

Film Capacitors Series

High Voltage Metallized Polypropylene Film Capacitor Type: PPS-CBB81

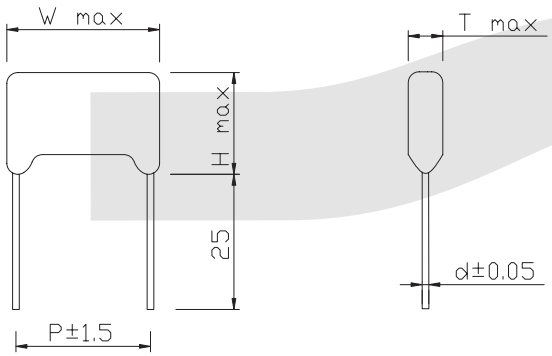

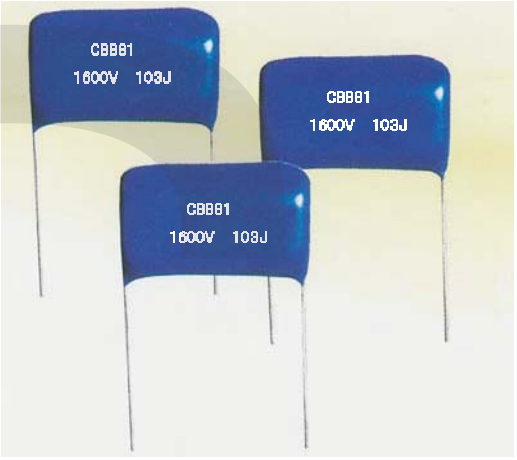

Construction

Dielectric	Polypropylene Film
Electrodes	Aluminum Metalaization & Aluminum Foils
Winding	Non-inductive type & internally connected series
Leads	Tinned Wire
Outer coating	Flame retarding epoxy resin

Features

Metallized polypropylene and metal foil winding, small size, high reliability, can withstand large current and high frequency
Very low loss, smll inherent temperature rise
High insulation resistance
Negative temperature coefficient of capacitance
Flame retardant epoxy resin coating
Suitable for high voltage and pulse circuits in the horizontal resonance circuits of color TVs

Specifications

Reference Standard:	GB/T14579 (IEC60384-17)
Rated Voltage:	1000Vdc,1200Vdc,1600Vdc,2000Vdc
Rated temperature:	+85ºC
Operating Temperature Range:	-40ºC~+85ºC
Capacitance Range:	0.001μF~0.1μF
Capacitance Tolerance :	±2%(G);±5%(J);±10%(K);
Dissipation Factor:	0.1% Max (25ºC , 1KHz)
Insulation Resistance:	R≥25000MΩ, C_R ≤1.0μF (20ºC , 1min)
Voltage Proof:	1.75U_R (5s)

ORDER INFORMATION

Product No.: KLS10 - CBB81 - XX - XX - X - XX

- Feet away from the
- Capacitance Tolerance
- Capacity
- Rated Voltage
- High Voltage Metallized Polypropylene Film Capacitor (PPS)
- Pos.No.

Film Capacitors Series

X

High Voltage Metallized Polypropylene Film Capacitor Type: PPN-CBB81

PPS Dimensions

Cap. (uF)

Size unit:m/m

R. V.	1000VDC					1200VDC					1600VDC					2000VDC				
Size	W	H	T	P	d	W	H	T	P	d	W	H	T	P	d	W	H	T	P	d
Cap.	1	1	1	1.5	0.05	1	1	1	1.5	0.05	1	1	1	1.5	0.05	1	1	1	1.5	0.05
0.001											19	10	5	15	0.8	24	11	6	20	0.8
0.0012											19	11	5	15	0.8	24	12	6	20	0.8
0.0015											19	11	6	15	0.8	24	13	7	20	0.8
0.0018											19	12	6	15	0.8	24	13	8	20	0.8
0.0022						19	12	6	15	0.8	19	12	6	15	0.8	24	14	8	20	0.8
0.0027						19	12	6	15	0.8	19	13	7	15	0.8	24	15	8	20	0.8
0.0033						19	13	7	15	0.8	19	13	8	15	0.8	24	16	9	20	0.8
0.0039						19	13	8	15	0.8	19	14	8	15	0.8	24	17	10	20	0.8
0.0047						19	14	8	15	0.8	19	15	9	15	0.8	24	18	11	20	0.8
0.0056	19	12	6	15	0.8	19	15	9	15	0.8	19	16	10	15	0.8	24	19	12	20	0.8
0.0068	19	13	7	15	0.8	19	16	10	15	0.8	19	17	11	15	0.8	24	20	13	20	0.8
0.0082	19	13	8	15	0.8	24	15	8	20	0.8	24	16	9	20	0.8	24	22	14	20	0.8
0.01	19	14	8	15	0.8	24	16	9	20	0.8	24	17	10	20	0.8	24	23	16	20	0.8
0.012	19	15	9	15	0.8	24	17	10	20	0.8	24	18	11	20	0.8	26	22	15	23	0.8
0.015	18	16	10	15	0.8	24	18	11	20	0.8	24	19	12	20	0.8	26	24	17	23	0.8
0.018	24	16	9	20	0.8	24	19	12	20	0.8	24	20	13	20	0.8					
0.022	24	17	10	20	0.8	24	20	13	20	0.8	24	22	15	20	0.8					
0.027	24	18	11	20	0.8															
0.033	24	19	12	20	0.8															
0.039	24	20	13	20	0.8															

- The above dimensions are for reference only. The final dimensions are subject to our specifications.

ORDER INFORMATION

Product No.: KLS10 - CBB81 - XX - XX - X - XX

- Feet away from the
- Capacitance Tolerance
- Capacity
- Rated Voltage
- Polypropylene Film Capacitor-Non Inductive Radial(PPN)
- Pos.No.

X

Film Capacitors Series

Polyester Film Capacitor-Inductive Type: PEI-CL11

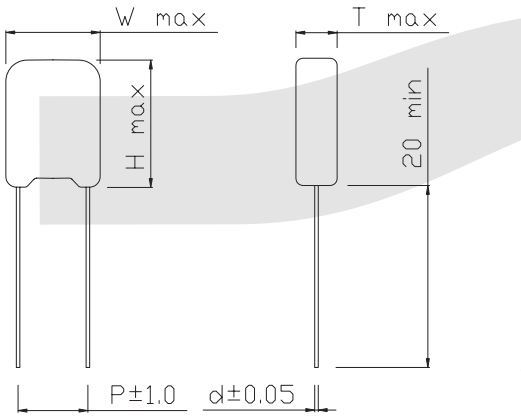

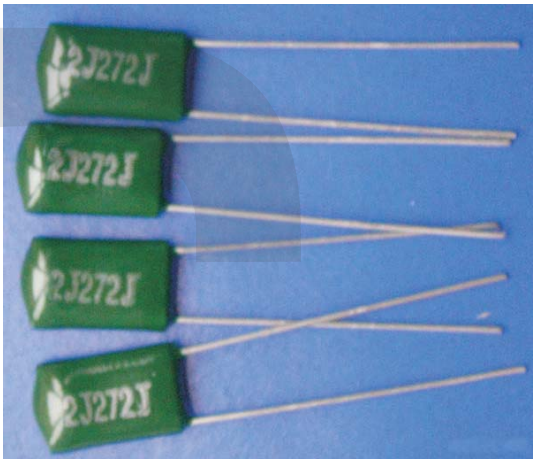

Construction

Dielectric	Polyester Film
Electrodes	Aluminum Foil
Winding	Inductive type
Leads	Tinned Wire
Outer coating	Flame retarding epoxy resin

Features

Small size and light weight
Dissipation factor is small because the leads are directly welded to electrodes
Epoxy resin vacuum-dipped enhances the mechanical strength, humidity resistance.
Widely used in dc and pulsating circuits of radio, TV sets and various electronic equipments

Specifications

Reference Standard	IEC 60384-11
Rated Temperature	-40ºC ~ +85ºC
Upper Category Temperature	+105ºC
	Derating ratio of rated voltage : +85ºC~ +105ºC :1.3% per ºC for V_R(DC)
Rated Voltage	100VDC,250VDC,400VDC,630VDC,1000VDC,1200VDC
Capacitance Range	0.001μF~0.475μF
Capacitance Tolerance	J=±5% K=±10% M=±20%
Voltage Proof	Terminal to Terminal:(at20+5ºC)
	1.6*V_R applied for 2 sec. (cut off current 10mA)
Dissipation factor	1.0%(max)at 1KHz
Insulation resistance (I.R.)	≥20000MΩ C_R≤0.1μF
	≥2000MΩ C_R>0.1μF 20+5ºC,100V,1min

ORDER INFORMATION

Product No.: KLS10 - CL11 - XX - XX - X - XX

- Feet away from the
- Capacitance Tolerance
- Capacity
- Rated Voltage
- Polyester Film Capacitor-Inductive (PEI)
- Pos.No.

X

Film Capacitors Series

Polyester Film Capacitor-Inductive Type: PEI-CL11

PEI Dimensions

Size unit :mm

R.V.	50/100VDC					200VDC/250VDC					400VDC					630VDC					1000/1200VDC				
Size	W	H	T	P	d	W	H	T	P	d	W	H	T	P	d	W	H	T	P	d	W	H	T	P	d
Cap. (uF)	Max	Max	Max	±1	±0.05	Max	Max	Max	±1	±0.05	Max	Max	Max	±1	±0.05	Max	Max	Max	±1	±0.05	Max	Max	Max	±1	±0.05
0.001	6	11	4	4	0.5	6	12	4	4	0.5	6	12	4	4	0.5	7	12	4	4	0.5	7	14	5	4	0.5
0.0012	6	11	4	4	0.5	6	12	4	4	0.5	6	12	4	4	0.5	7	12	4	4	0.5	7	14	5	4	0.5
0.0015	6	11	4	4	0.5	6	12	4	4	0.5	6	12	4	4	0.5	7	12	4	4	0.5	7.5	14	5	4	0.5
0.0018	6	11	4	4	0.5	6	12	4	4	0.5	6	12	4	4	0.5	7	12	4	4	0.5	7.5	14	5	4	0.5
0.0022	6	11	4	4	0.5	6	12	4	4	0.5	6	12	4	4	0.5	7	13	5	4	0.5	8	14	5	4	0.5
0.0027	6	11	4	4	0.5	6	12	4	4	0.5	7	12	4	4	0.5	7	12	4	4	0.5	8	14	6	4	0.5
0.0033	6	11	4	4	0.5	6	12	4	4	0.5	7	12	4	4	0.5	7	12	4	4	0.5	8	14	6	4	0.5
0.0039	6	11	4	4	0.5	6	12	4	4	0.5	7	12	4	4	0.5	7	12	4	4	0.5	8	14	6	4	0.5
0.0047	7	11	4	4	0.5	7	12	4	4	0.5	8	12	5	4	0.5	8	12	6	4	0.5	9	15	6	4	0.5
0.0056	7	11	4	4	0.5	7	12	4	4	0.5	8	12	5	4	0.5	8	12	6	4	0.5	10	16	7	5	0.5
0.0068	7	11	4	4	0.5	7	12	4	4	0.5	9	13	5	4	0.5	8	12	6	5	0.5	10	16	7	6	0.5
0.0082	7	11	4	4	0.5	7	12	4	4	0.5	9	14	5	4	0.5	9	14	6	5	0.5	10	16	8	6	0.5
0.01	7	11	5	4	0.5	7	12	5	4	0.5	10	15	6	4	0.5	10	17	7	6	0.5	11	17	8	6	0.5
0.012	7	11	5	4	0.5	7	12	5	4	0.5	10	15	6	4	0.5	12	17	8	6	0.5	12	18	9	6	0.5
0.015	8	11	5	4	0.5	8	12	5	4	0.5	11	15	6	5	0.5	12	17	8	6	0.5	12	18	9	7	0.5
0.018	8	11	5	4	0.5	8	12	5	4	0.5	11	15	7	5	0.5	12	17	9	6	0.5					
0.022	8	11	5	4	0.5	8	12	5	4	0.5	12	16	8	6	0.5	13	17	9	8	0.5					
0.027	8	12	5	5	0.5	8	13	5	5	0.5	12	16	9	6	0.5	14	18	10	8	0.5					
0.033	8	12	5	5	0.5	8	13	5	5	0.5	12	16	9	6	0.5	14	18	10	8	0.5					
0.039	9	13	5	5	0.5	9	14	5	5	0.5	13	17	10	7	0.5										
0.047	9	13	5	5	0.5	9	14	6	5	0.5	13	17	10	7	0.5										
0.056	10	13	6	6	0.5	10	14	6	7	0.5	13	17	10	7	0.5										
0.068	10	13	6	6	0.5	10	14	6	7	0.5	13	18	10	7	0.5										
0.082	11	13	6	7	0.5	11	14	6	8	0.5	13	18	10	8	0.5										
0.1	12	14	7	7	0.5	15	15	10	8	0.5	14	19	10	8	0.5										
0.12	12	14	7	7	0.5																				
0.15	12	15	7	7	0.5																				
0.18	12	16	8	7	0.5																				
0.22	12	16	8	7	0.5																				
0.27	13	16	9	7	0.5																				
0.33	14	17	9	8	0.5																				
0.39	14	17	9	8	0.5																				
0.47	15	17	10	8	0.5																				

- The above dimensions are for reference only. The final dimensions are subject to our specifications.

ORDER INFORMATION

Product No.: KLS10 - CL11 - XX - XX - X - XX

- Feet away from the
- Capacitance Tolerance
- Capacity
- Rated Voltage
- Polyester Film Capacitor-Inductive (PEI)
- Pos.No.

KLS electronic
www.cnkls.com

X

Film Capacitors Series

Metallized Polyester Film Capacitor-Axial Type: MET-CL20

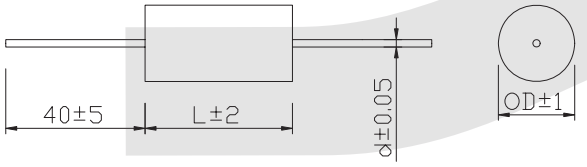

D	dØ
<8mm	0.6mm
>8mm	0.8mm



Construction

Dielectric	Polyester Film
Electrodes	Aluminum Metalaization
Winding	Non-inductive type
Leads	Tinned clad copper wire or Tinned Wire
Outer coating	Insulating tape wrapping and epoxy resin end filled

Features

Small size and light weight
excellent self-healing property
Wrapped with polyester adhesive tape and ends filled with epoxy resin

Specifications

Reference Standard:	GB 7332 (IEC60384-2)
Rated Voltage:	100VDC,250VDC,400VDC,630VDC
Rated temperature:	+85°C
Operating Temperature Range:	-40°C~+85°C
Capacitance Range:	0.001μF~10μF
Capacitance Tolerance :	±5%(J);±10%(K);
Dissipation Factor:	1.0% Max (20°C , 1KHz)
Insulation Resistance:	R≥30000MΩ, C_R ≤0.33μF
	R≥10000S, C_R >0.33μF (20°C , 1min)
Voltage Proof:	1.6U_R (5s)

ORDER INFORMATION

Product No.: KLS10 - CL20 - XX - XX - X - XX

- Feet away from the
- Capacitance Tolerance
- Capacity
- Rated Voltage
- Metallized Polyester Film Capacitor-Axial (MET)
- Pos.No.

Film Capacitors Series

X

Metallized Polyester Film Capacitor-Axial Type: MET-CL20

MET Dimensions Size unit:mm

Cap. (uF)

R. V.	100VDC		250VDC		400VDC		630VDC	
Size	L	OD	L	OD	L	OD	L	OD
Cap.	Max	Max	Max	Max	Max	Max	Max	Max
0. 01							14	6
0. 015					14	6	14	7
0. 022					14	6	14	7
0. 033					14	6	19	8
0. 047					14	7	19	8
0. 068			14	6	19	8	19	9
0. 1	14	6	14	7	19	8	27	9
0. 15	14	6	14	9	19	9	27	11
0. 22	14	7	19	8	27	9	27	12
0. 33	14	7	19	9	27	10	33	13
0. 47	19	8	19	10	27	13	33	14
0. 68	19	9	27	10	33	13	33	18
1	19	10	27	12	3	15	38	21
1. 5	27	11	27	12	33	18	38	25
2. 2	27	12	33	14	38	20	38	28
3. 3	27	14	33	16	38	27		
4. 7	33	15	38	20	38	30		
6. 8	33	17	38	24				
10	33	20	48	23				

- The above dimensions are for reference only. The final dimensions are subject to our specifications.

ORDER INFORMATION

Product No.: KLS10 - CL20 - XX - XX - X - XX

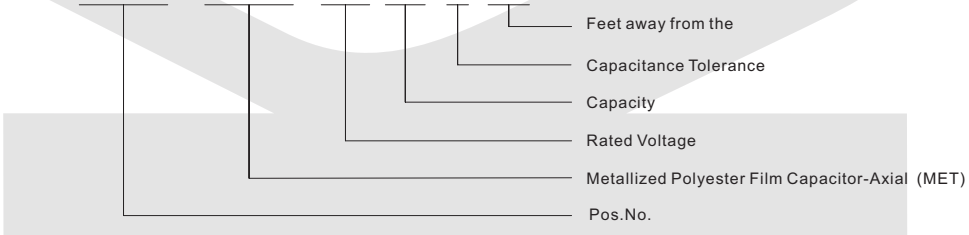

Film Capacitors Series

Metallized Polyester Film Capacitor-Axial Type: MEA-CL20

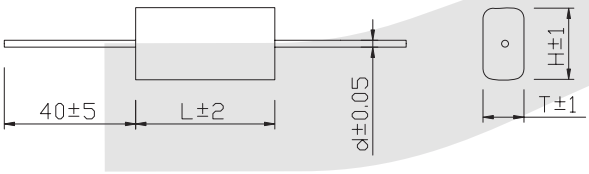

D	dØ
<8mm	0.6mm
>8mm	0.8mm



MEA Dimensions Size unit:mm

R. V.	100VDC			250VDC			400VDC			630VDC		
Size	W	H	T	W	H	T	W	H	T	W	H	T
Cap.	Max	Max	Max	Max	Max	Max	Max	Max	Max	Max	Max	Max
0. 01												
0. 015												
0. 022										14	9	6
0. 033							14	9	6	14	11	7
0. 047							14	10	6	19	10	6
0. 068				11	8	5	14	11	6	19	12	7
0. 1				14	8	5	19	11	6	19	12	8
0. 15				14	9	5	19	11	7	19	14	10
0. 22				19	10	5	27	14	7	27	15	10
0. 33	14	9	6	19	11	6	27	13	8	27	19	11
0. 47	19	10	5	19	12	7	27	17	9	33	19	12
0. 68	19	10	6	27	12	7	33	17	9	38	20	13
1	19	11	7	27	13	8	33	19	9	38	23	16
1. 5	27	13	6	33	15	9	38	20	9	38	28	20
2. 2	27	14	8	33	18	10	44	24	13	38	30	22
3. 3	27	16	10	33	21	13	44	26	16	48	35	22
4. 7	33	18	11	38	21	12	48	28	16			
6. 8	33	20	12	38	26	13	48	33	23			
10	33	24	15	48	30	18						

- The above dimensions are for reference only. The final dimensions are subject to our specifications.

ORDER INFORMATION

Product No.: KLS10 - CL20 - XX - XX - X - XX

- Feet away from the
- Capacitance Tolerance
- Capacity
- Rated Voltage
- Metallized Polyester Film Capacitor-Axial (MEA)
- Pos.No.

X

Film Capacitors Series

Metallized Polyester Film Capacitor Type: MEF-CL21

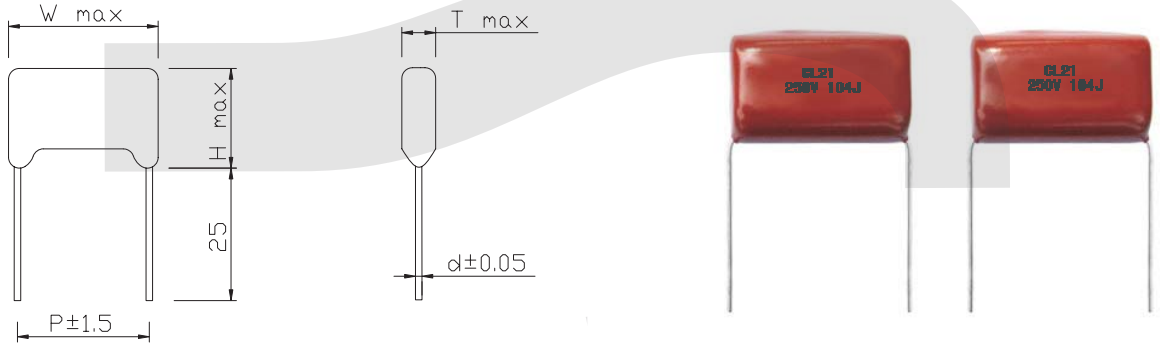

Construction

Dielectric	Polyester Film
Electrodes	Aluminum Metalaization
Winding	Non-inductive type
Leads	Tinned Wire
Outer coating	Flame retarding epoxy resin

Features & APPLICATION

Wide capacitance range, small size and light weight
Long life due to self-healing effect
Flame retardation epoxy resin powder coating provides safety
Suitable for blocking, by-pass and couping of DC and signals to VHF range
Widely used in fifter and low pulse circuits

Specifications

Reference Standard:	GB 7332 (IEC60384-2)
Rated Voltage:	100VDC-250VDC-400VDC-630VDC
Rated temperature:	+85ºC
Operating Temperature Range:	-55ºC~+105ºC
	Derating ratio of rated voltage +85ºC~+105ºC: 1.25% per ºC for VR (DC)
Capacitance Range:	0.01μF~2.2μF
Capacitance Tolerance :	±5%(J);±10%(K)
Dissipation Factor:	1% max (25ºC , 1KHz)
Insulation Resistance:	R>30 000MΩ CR <0.33uF 20 +5ºC, 100V, 1min
	R>10 000MΩ 1.0uF≥ CR≥ 0.33uF
	R>1 000MΩ CR> 1.0uF
Voltage Proof:	1.5U_R (5s)

ORDER INFORMATION

Product No.: KLS10 - CL21 - XX - XX - X - XX

- Feet away from the
- Capacitance Tolerance
- Capacity
- Rated Voltage
- Product Name: Metallized Polyester Film Capacitor(MEF)
- Pos.No.

Film Capacitors Series

X

Metallized Polyester Film Capacitor Type: MEF-CL21

Dimensions(mm)

R. V.	100VDC					250VDC				
Size	W	H	T	P	d	W	H	T	P	d
Cap.	Max	Max	Max	1	0. 05	Max	Max	Max	1	0. 05
0. 01										
0. 015										
0. 022						11	10	6	7. 5	0. 6
0. 033						11	10	6	7. 5	0. 6
0. 047	11	10	6	7. 5	0. 6	11	10	6	7. 5	0. 6
0. 068	11	10	6	7. 5	0. 6	11	10	7	7. 5	0. 6
0. 1	11	10	6	7. 5	0. 6	13	10	7	10	0. 6
0. 15	13	9	6	10	0. 6	19	11	6	15	0. 8
0. 22	13	10	7	10	0. 6	19	12	7	15	0. 8
0. 33	13	12	8	10	0. 6	19	12	7	15	0. 8
0. 47	19	11	6	15	0. 8	24	13	8	20	0. 8
0. 68	19	13	8	15	0. 8	24	14	9	20	0. 8
1	19	14	9	15	0. 8	24	15	10	20	0. 8
1. 5	24	15	8	20	0. 8	32	18	9. 5	28	0. 8
2. 2	24	17	10	20	0. 8	32	19	11	28	0. 8

R. V.	400VDC					630VDC				
Size	W	H	T	P	d	W	H	T	P	d
Cap.	Max	Max	Max	1	0. 05	Max	Max	Max	1	0. 05
0. 01	11	9	6	7. 5	0. 6	13	10	6	10	0. 6
0. 015	11	10	6	7. 5	0. 6	13	11	7	10	0. 6
0. 022	11	10	6	7. 5	0. 6	13	13	8	10	0. 6
0. 033	11	11	7	7. 5	0. 6	19	12	7	15	0. 8
0. 047	13	12	7	10	0. 6	19	13	8	15	0. 8
0. 068	13	13	8	10	0. 6	19	14	9	15	0. 8
0. 1	19	13	7	15	0. 8	19	15	10	15	0. 8
0. 15	19	14	8	15	0. 8	24	17	10	20	0. 8
0. 22	24	15	8	20	0. 8	24	19	12	20	0. 8
0. 33	24	15	9	20	0. 8	32	19	12	28	0. 8
0. 47	24	19	12	20	0. 8	32	22	14	28	0. 8
0. 68	32	19	12	20	0. 8	36	23	15	33	0. 8
1	32	22	14	28	0. 8	36	29	16	33	0. 8
1. 5	36	24	14	33	0. 8	42	30	19	38	0. 8
2. 2	36	28	19	33	0. 8					

- The above dimensions are for reference only. The final dimensions are subject to our specifications.

ORDER INFORMATION

Product No.: KLS10 - CL21 - XX - XX - X - XX

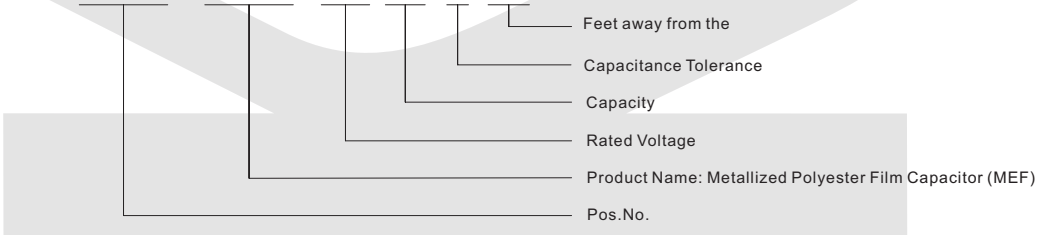

X

Film Capacitors Series

Box-type Metallized Polyester Film Capacitor Type: MEB-CL23

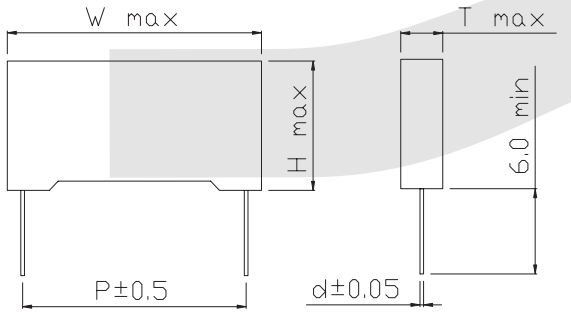

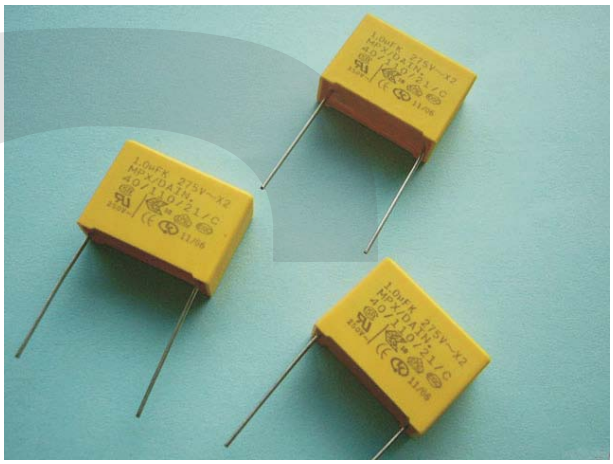

Construction

Dielectric	Polyester Film
Electrodes	Aluminum Metalaization
Winding	Non-inductive type
Leads	Tinned Wire
Outer coating	Flame retarding plasitic case and epoxy resin filled

Features

Wide capacitance range,small size and light weight
Long life due to self-healing effect
Flame retardation epoxy resin powder coating provides safety
Suitable for blocking,by-pass and couping of DC and signals to VHF range
Widely used in fifter and low pulse circuits
Flame-retardant plastic case and epoxy resinz (compliance with UL94V-0)

Specifications

Reference Standard	IEC 60384-2		
Rated Temperature	-40ºC~+85ºC		
Upper Category Temperature	+105ºC		
	Derating ratio of rated voltage +85ºC~+105ºC: 1.25% per ºC for VR(DC)		
Rated Voltage	100VDC,250VDC,400VDC,630VDC		
Capacitance Range	0.0068μF~10μF		
Capacitance Tolerance	J=±5% K=±10% M=±20%		
Dissipation factor	1.0% max at 20ºC , 1KHz		
Voltage Proof	Terminal to Terminal:(at20+5ºC)		
	1.5*VR applied for 2 sec. (cut off current 10mA)		
Insulation resistance (I.R.)	≥30000MΩ	CR≤0.33μF	
	≥10000MΩ	1.0μF>CR>0.33μF	20+5ºC,100V,1min
	≥1000MΩ	CR>1.0μF	

ORDER INFORMATION

Product No.: KLS10 - CL23 - XX - XX - X - XX

- Feet away from the
- Capacitance Tolerance
- Capacity
- Rated Voltage
- Product Name:Box-type metallized Polyester Film Capacitor (MEB)
- Pos.No.

Film Capacitors Series

X

Box-type metallized Polyester Film Capacitor Type: MEB-CL23

MEB Dimensions

Size unit :mm

R. V.	50/100VDC					250VDC					400VDC					630VDC				
Size	W	H	T	P	d	W	H	T	P	d	W	H	T	P	d	W	H	T	P	d
Cap.	Max	Max	Max	1	0. 05	Max	Max	Max	1	0. 05	Max	Max	Max	1	0. 05	Max	Max	Max	1	0. 05
0. 01																13	9. 5	4	10	0. 6
0. 015																13	11	5	10	0. 6
0. 022											13	9. 5	4	10	0. 6	13	12	6	10	0. 6
0. 033											13	11	5	10	0. 6	18	11	5	15	0. 8
0. 047						13	9. 5	4	10	0. 6	13	12	6	10	0. 6	18	12	6	15	0. 8
0. 068						13	9. 5	4	10	0. 3	18	11	5	15	0. 8	18	13. 5	7. 5	15	0. 8
0. 1						13	11	5	10	0. 6	18	12	6	15	0. 8	26. 5	16. 5	7	15	0. 8
0. 15	13	9. 5	4	10	0. 6	18	11	5	15	0. 8	18	13. 5	7. 5	15	0. 8	26. 5	16. 5	7	22. 5	0. 8
0. 22	13	11	5	10	0. 6	18	11	5	15	0. 8	18	14. 5	8. 5	15	0. 8	26. 5	19	10	22. 5	0. 8
0. 33	13	12	6	10	0. 6	18	12	6	15	0. 8	26. 5	16. 5	7	22. 5	0. 8	32	20	11	22. 5	0. 8
0. 47	18	11	5	15	0. 6	18	13. 5	7. 5	15	0. 8	26. 5	19	10	22. 5	0. 8	32	22	13	27. 5	0. 8
0. 68	18	12	6	15	0. 8	26. 5	16. 5	7	22. 5	0. 8	26. 5	19	10	22. 5	0. 8	32	25	14	27. 5	0. 8
1	18	13. 5	7. 5	15	0. 8	26. 5	17	8. 5	22. 5	0. 8	32	20	11	27. 5	0. 8					
1. 5	26. 5	16. 5	7	22. 5	0. 8	26. 5	19	10	22. 5	0. 8	32	22	13	27. 5	0. 8					
2. 2	26. 5	17	8. 5	22. 5	0. 8	32	20	11	27. 5	0. 8										
3. 3	26. 5	19	10	22. 5	0. 8	32	22	13	27. 5	0. 8										
4. 7	32	20	11	27. 5	0. 8															
6. 8	32	22	13	27. 5	0. 8															
10	32	25	14	27. 5	0. 8															

- The above dimensions are for reference only. The final dimensions are subject to our specifications.

ORDER INFORMATION

Product No.: KLS10 - CL23 - XX - XX - X - XX

- Feet away from the
- Capacitance Tolerance
- Capacity
- Rated Voltage
- Product Name:Box-type metallized Polyester Film Capacitor (MEB)
- Pos.No.

X

Film Capacitors Series

Miniaturized Metallized Polyester Film Capacitor Box-Type: MEMB-CL23B

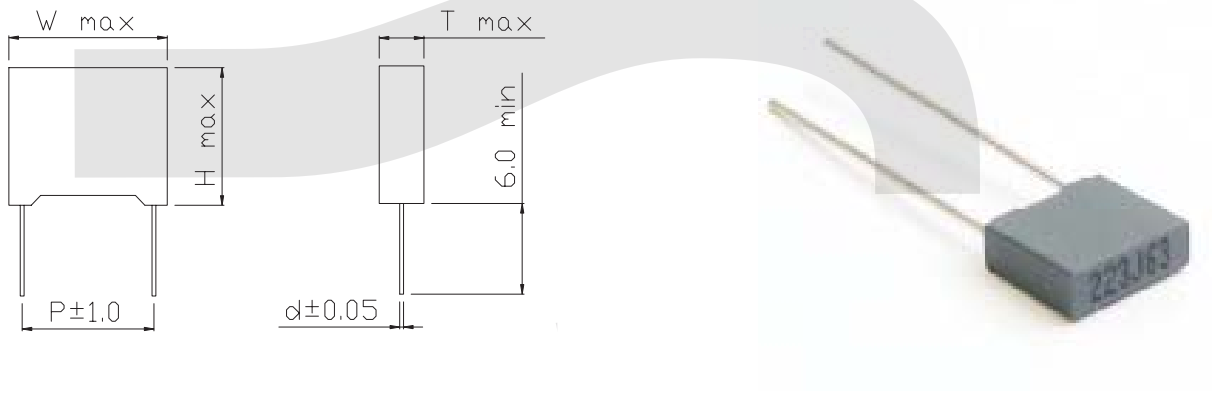

Construction

Dielectric	Polyester Film
Electrodes	Aluminum Metalaization
Winding	Non-inductive type
Leads	Tinned Wire
Outer coating	Flame retarding plasitic case and epoxy resin filled

Features

Space-saving minature size
Non-inductive construction
Self-healing property
High-moisture resistance
Flame-retardant plastic case and epoxy resinz (compliance with UL94V-0)

Specifications

Reference Standard	IEC 60384-2		
Operating Temperature Rangr	-40°C ~ +100°C		
	+85°C~ +105°C :Decreasing factor 1.25% per °C for V_R(DC)		
Rated Voltage	63VDC,100VDC,250VDC,400VDC		
Capacitance Range	0.001μF~1.5μF		
Capacitance Tolerance	J=±5% K=±10% M=±20%		
Dissipation factor	1.0% max at 20°C , 1KHz		
Voltage Proof	Terminal to Terminal:(at20+5°C)		
	1.5*V_R applied for 2 sec. (cut off current 10mA)		
Insulation resistance (I.R.)	≥15000MΩ	C_R≤0.33μF	
	≥5000MΩ	C_R>0.33μF	20+5°C,100V,1min

ORDER INFORMATION

Product No.: KLS10 - CL23B - XX - XX - X - XX

- Feet away from the
- Capacitance Tolerance
- Capacity
- Rated Voltage
- Miniaturized Metallized Polyester Film Capacitor Box-Type(MEMB)
- Pos.No.

Film Capacitors Series

X

Miniaturized Metallized Polyester Film Capacitor Box-Type: MEMB-CL23B

MEMB Dimensions

Size unit :mm

R. V.	63VDC/40VAC					100VDC/63VAC					250VDC/160VAC					400VDC/200VAC				
Size	W	H	T	P	d	W	H	T	P	d	W	H	T	P	d	W	H	T	P	d
Cap.	Max	Max	Max	1	0. 05	Max	Max	Max	1	0. 05	Max	Max	Max	1	0. 05	Max	Max	Max	1	0. 05
0. 001	7. 6	6. 5	2. 5	5	0. 5	7. 6	6. 5	2. 5	5	0. 5	7. 6	6. 5	2. 5	5	0. 5	7. 6	6. 5	2. 5	5	0. 5
0. 0012	7. 6	6. 5	2. 5	5	0. 5	7. 6	6. 5	2. 5	5	0. 5	7. 6	6. 5	2. 5	5	0. 5	7. 6	6. 5	2. 5	5	0. 5
0. 0015	7. 6	6. 5	2. 5	5	0. 5	7. 6	6. 5	2. 5	5	0. 5	7. 6	6. 5	2. 5	5	0. 5	7. 6	6. 5	2. 5	5	0. 5
0. 0018	7. 6	6. 5	2. 5	5	0. 5	7. 6	6. 5	2. 5	5	0. 5	7. 6	6. 5	2. 5	5	0. 5	7. 6	6. 5	2. 5	5	0. 5
0. 0022	7. 6	6. 5	2. 5	5	0. 5	7. 6	6. 5	2. 5	5	0. 5	7. 6	6. 5	2. 5	5	0. 5	7. 6	6. 5	2. 5	5	0. 5
0. 0027	7. 6	6. 5	2. 5	5	0. 5	7. 6	6. 5	2. 5	5	0. 5	7. 6	6. 5	2. 5	5	0. 5	7. 6	6. 5	2. 5	5	0. 5
0. 0033	7. 6	6. 5	2. 5	5	0. 5	7. 6	6. 5	2. 5	5	0. 5	7. 6	6. 5	2. 5	5	0. 5	7. 6	6. 5	2. 5	5	0. 5
0. 0039	7. 6	6. 5	2. 5	5	0. 5	7. 6	6. 5	2. 5	5	0. 5	7. 6	6. 5	2. 5	5	0. 5	7. 6	6. 5	2. 5	5	0. 5
0. 0047	7. 6	6. 5	2. 5	5	0. 5	7. 6	6. 5	2. 5	5	0. 5	7. 6	6. 5	2. 5	5	0. 5	7. 6	6. 5	2. 5	5	0. 5
0. 0056	7. 6	6. 5	2. 5	5	0. 5	7. 6	6. 5	2. 5	5	0. 5	7. 6	6. 5	2. 5	5	0. 5	7. 6	8	3. 8	5	0. 5
0. 0068	7. 6	6. 5	2. 5	5	0. 5	7. 6	6. 5	2. 5	5	0. 5	7. 6	6. 5	2. 5	5	0. 5	7. 6	8	3. 8	5	0. 5
0. 0082	7. 6	6. 5	2. 5	5	0. 5	7. 6	6. 5	2. 5	5	0. 5	7. 6	6. 5	2. 5	5	0. 5	7. 6	8	3. 8	5	0. 5
0. 01	7. 6	6. 5	2. 5	5	0. 5	7. 6	6. 5	2. 5	5	0. 5	7. 6	6. 5	2. 5	5	0. 5	7. 6	8	3. 8	5	0. 5
0. 012	7. 6	6. 5	2. 5	5	0. 5	7. 6	6. 5	2. 5	5	0. 5	7. 6	6. 5	2. 5	5	0. 5	7. 6	8	3. 8	5	0. 5
0. 015	7. 6	6. 5	2. 5	5	0. 5	7. 6	6. 5	2. 5	5	0. 5	7. 6	6. 5	2. 5	5	0. 5	7. 6	8	3. 8	5	0. 5
0. 018	7. 6	6. 5	2. 5	5	0. 5	7. 6	6. 5	2. 5	5	0. 5	7. 6	8	3. 8	5	0. 5	7. 6	12	6	5	0. 5
0. 022	7. 6	6. 5	2. 5	5	0. 5	7. 6	6. 5	2. 5	5	0. 5	7. 6	8	3. 8	5	0. 5	7. 6	12	6	5	0. 5
0. 027	7. 6	6. 5	2. 5	5	0. 5	7. 6	6. 5	2. 5	5	0. 5	7. 6	8	3. 8	5	0. 5	7. 6	12	6	5	0. 5
0. 033	7. 6	6. 5	2. 5	5	0. 5	7. 6	6. 5	2. 5	5	0. 5	7. 6	8	3. 8	5	0. 5	7. 6	12	6	5	0. 5
0. 039	7. 6	6. 5	2. 5	5	0. 5	7. 6	6. 5	2. 5	5	0. 5	7. 6	8	3. 8	5	0. 5					
0. 047	7. 6	6. 5	2. 5	5	0. 5	7. 6	6. 5	2. 5	5	0. 5	7. 6	8	3. 8	5	0. 5					
0. 056	7. 6	6. 5	2. 5	5	0. 5	7. 6	6. 5	2. 5	5	0. 5	7. 6	8	3. 8	5	0. 5					
0. 068	7. 6	6. 5	2. 5	5	0. 5	7. 6	6. 5	2. 5	5	0. 5	7. 6	8	3. 8	5	0. 5					
0. 082	7. 6	6. 5	2. 5	5	0. 5	7. 6	6. 5	2. 5	5	0. 5	7. 6	12	6	5	0. 5					
0. 1	7. 6	6. 5	2. 5	5	0. 5	7. 6	6. 5	2. 5	5	0. 5	7. 6	12	6	5	0. 5					
0. 12	7. 6	6. 5	2. 5	5	0. 5	7. 6	6. 5	2. 5	5	0. 5	7. 6	12	6	5	0. 5					
0. 15	7. 6	6. 5	2. 5	5	0. 5	7. 6	6. 5	2. 5	5	0. 5	7. 6	12	6	5	0. 5					
0. 18	7. 6	6. 5	2. 5	5	0. 5	7. 6	8	5	5	0. 5										
2. 2	7. 6	6. 5	2. 5	5	0. 5	7. 6	8	5	5	0. 5										
2	7. 6	6. 5	2. 5	5	0. 5	7. 6	8	5	5	0. 5										
0. 33	7. 6	6. 5	2. 5	5	0. 5	7. 6	8	5	5	0. 5										
0. 39	7. 6	6. 5	2. 5	5	0. 5	7. 6	12	6	5	0. 5										
0. 47	7. 6	8	5	5	0. 5	7. 6	12	6	5	0. 5										
0. 56	7. 6	8	5	5	0. 5	7. 6	12	6	5	0. 5										
0. 68	7. 6	8	5	5	0. 5	7. 6	12	6	5	0. 5										
0. 82	7. 6	8	5	5	0. 5	7. 6	12	6	5	0. 5										
1	7. 6	8	5	5	0. 5	7. 6	12	6	5	0. 5										
1. 5	7. 6	12	6	5	0. 5															

- The above dimensions are for reference only. The final dimensions are subject to our specifications.

ORDER INFORMATION

Product No.: KLS10 - CL23B - XX - XX - X - XX

- Feet away from the
- Capacitance Tolerance
- Capacity
- Rated Voltage
- Miniaturized Metallized Polyester Film Capacitor Box-Type(MEMB)
- Pos.No.

X

Film Capacitors Series

Sub-mini Metallized Polyester Film Capacitor Box-Type: CL23B Sub-mini

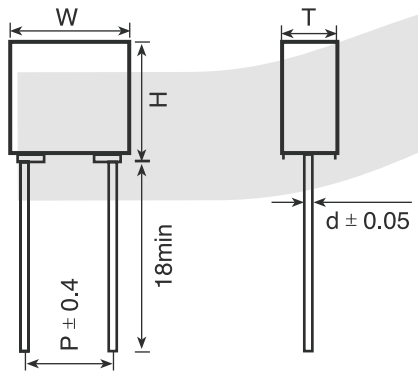

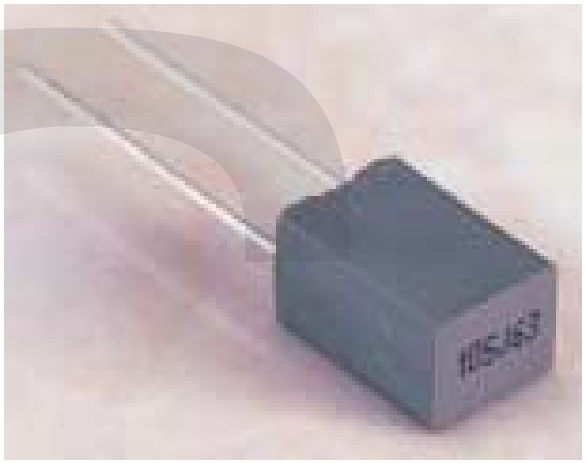

Construction

Dielectric	Polyester Film
Electrodes	Aluminum Metalaization
Winding	Non-inductive type
Leads	Tinned Wire
Outer coating	Flame retarding plasitic case and epoxy resin filled

Features

Space-saving minature size
Non-inductive construction
Self-healing property
High-moisture resistance
Flame-retardant plastic case and epoxy resinz (compliance with UL94V-0)

Specifications

Reference Standard	IEC 60384-2
Rated Temperature	85ºC
Operating Temperature Rangr	-55ºC ~ +105ºC
	+85ºC~ +105ºC :Decreasing factor 1.25% per ºC for V_R(DC)
Rated Voltage	50/63VDC,100VDC,250VDC,400VDC,500VDC,630VDC
Capacitance Range	0.001μF~1.5μF
Capacitance Tolerance	J=±5% K=±10% M=±20%
Voltage Proof	I Type :1.6U_R (5S) II Type :1.4U_R (5S)
Dissipation factor	1.0%(max)at 1KHz
Insulation resistance (I.R.)	≥15000MΩ C_R≤0.33μF
	≥5000MΩ C_R>0.33μF 20+5ºC,100V,1min

ORDER INFORMATION

Product No.: KLS10 - CL23B - XX - XX - X - XX Sub-mini

- Feet away from the
- Capacitance Tolerance
- Capacity
- Rated Voltage
- Sub-mini Metallized Polyester Film Capacitor Box-Type
- Pos.No.

Film Capacitors Series

X

Sub-mini Metallized Polyester Film Capacitor Box-Type: CL23B Sub-mini

I Type

Size unit :mm

Cap (μF)	50/63VDC			100VDC			250VDC			400VDC			500VDC			630VDC		
	W	H	T	W	H	T	W	H	T	W	H	T	W	H	T	W	H	T
0.0010	7.2	6.5	2.5	7.2	6.5	2.5	7.2	6.5	2.5	7.2	6.5	2.5	7.2	6.5	2.5	7.2	6.5	2.5
0.0012	7.2	6.5	2.5	7.2	6.5	2.5	7.2	6.5	2.5	7.2	6.5	2.5	7.2	6.5	2.5	7.2	6.5	2.5
0.0015	7.2	6.5	2.5	7.2	6.5	2.5	7.2	6.5	2.5	7.2	6.5	2.5	7.2	6.5	2.5	7.2	6.5	2.5
0.0018	7.2	6.5	2.5	7.2	6.5	2.5	7.2	6.5	2.5	7.2	6.5	2.5	7.2	6.5	2.5	7.2	7.5	3.5
0.0022	7.2	6.5	2.5	7.2	6.5	2.5	7.2	6.5	2.5	7.2	6.5	2.5	7.2	6.5	2.5	7.2	7.5	3.5
0.0027	7.2	6.5	2.5	7.2	6.5	2.5	7.2	6.5	2.5	7.2	6.5	2.5	7.2	6.5	2.5	7.2	7.5	3.5
0.0033	7.2	6.5	2.5	7.2	6.5	2.5	7.2	6.5	2.5	7.2	6.5	2.5	7.2	7.5	3.5	7.2	7.5	3.5
0.0039	7.2	6.5	2.5	7.2	6.5	2.5	7.2	6.5	2.5	7.2	6.5	2.5	7.2	7.5	3.5	7.2	7.5	3.5
0.0047	7.2	6.5	2.5	7.2	6.5	2.5	7.2	6.5	2.5	7.2	6.5	2.5	7.2	7.5	3.5	7.2	9.5	4.5
0.0056	7.2	6.5	2.5	7.2	6.5	2.5	7.2	6.5	2.5	7.2	7.5	3.5	7.2	7.5	3.5	7.2	9.5	4.5
0.0068	7.2	6.5	2.5	7.2	6.5	2.5	7.2	6.5	2.5	7.2	7.5	3.5	7.2	9.5	4.5	7.2	9.5	4.5
0.0082	7.2	6.5	2.5	7.2	6.5	2.5	7.2	6.5	2.5	7.2	7.5	3.5	7.2	9.5	4.5	7.2	9.5	4.5
0.010	7.2	6.5	2.5	7.2	6.5	2.5	7.2	6.5	2.5	7.2	7.5	3.5	7.2	9.5	4.5	7.2	10.0	5.0
0.012	7.2	6.5	2.5	7.2	6.5	2.5	7.2	6.5	2.5	7.2	9.5	4.5	7.2	9.5	4.5	7.2	11.0	6.0
0.015	7.2	6.5	2.5	7.2	6.5	2.5	7.2	6.5	2.5	7.2	9.5	4.5	7.2	10.0	5.0	7.2	11.0	6.0
0.018	7.2	6.5	2.5	7.2	6.5	2.5	7.2	6.5	2.5	7.2	9.5	4.5	7.2	11.0	6.0			
0.022	7.2	6.5	2.5	7.2	6.5	2.5	7.2	7.5	3.5	7.2	10.0	5.0	7.2	11.0	6.0			
0.027	7.2	6.5	2.5	7.2	6.5	2.5	7.2	7.5	3.5	7.2	11.0	6.0	7.2	11.0	6.0			
0.033	7.2	6.5	2.5	7.2	6.5	2.5	7.2	7.5	3.5	7.2	11.0	6.0						
0.039	7.2	6.5	2.5	7.2	6.5	2.5	7.2	7.5	3.5	7.2	11.0	6.0						
0.047	7.2	6.5	2.5	7.2	6.5	2.5	7.2	9.5	4.5	7.2	11.0	6.0						
0.056	7.2	6.5	2.5	7.2	6.5	2.5	7.2	9.5	4.5									
0.068	7.2	6.5	2.5	7.2	6.5	2.5	7.2	9.5	4.5									
0.082	7.2	6.5	2.5	7.2	6.5	2.5	7.2	10.0	5.0									
0.10	7.2	6.5	2.5	7.2	7.5	3.5	7.2	10.0	5.0									
0.12	7.2	6.5	2.5	7.2	9.5	4.5	7.2	11.0	6.0									
0.15	7.2	7.5	3.5	7.2	9.5	4.5	7.2	11.0	6.0									
0.18	7.2	7.5	3.5	7.2	9.5	4.5												
0.22	7.2	7.5	3.5	7.2	10.0	5.0												
0.27	7.2	9.5	4.5	7.2	10.0	5.0												
0.33	7.2	9.5	4.5	7.2	11.0	6.0												
0.39	7.2	9.5	4.5	7.2	11.0	6.0												
0.47	7.2	10.0	5.0	7.2	11.0	6.0												
0.56	7.2	10.0	5.0	7.2	11.0	6.0												
0.68	7.2	11.0	6.0															
0.82	7.2	11.0	6.0															
1.0	7.2	11.0	6.0															

II Type

Cap (μF)	50/63VDC			100VDC			Cap (μF)	50/63VDC			100VDC		
	W	H	T	W	H	T		W	H	T	W	H	T
0.10				7.2	6.5	2.5	0.39	7.2	7.5	3.5	7.2	9.5	4.5
0.12				7.2	6.5	2.5	0.47	7.2	7.5	3.5	7.2	10.0	5.0
0.15	7.2	6.5	2.5	7.2	7.5	3.5	0.56	7.2	9.5	4.5	7.2	10.0	5.0
0.18	7.2	6.5	2.5	7.2	7.5	3.5	0.68	7.2	9.5	4.5	7.2	11.0	6.0
0.22	7.2	6.5	2.5	7.2	7.5	3.5	0.82	7.2	9.5	4.5	7.2	11.0	6.0
0.27	7.2	6.5	2.5	7.2	9.5	4.5	1.0	7.2	10.0	5.0	7.2	11.0	6.0
0.33	7.2	7.5	3.5	7.2	9.5	4.5	1.5	7.2	11.0	6.0			

- The above dimensions are for reference only. The final dimensions are subject to our specifications.

X

Film Capacitors Series

MKP Radio Interference Suppression X2 Capacitor Type: MKP-X2

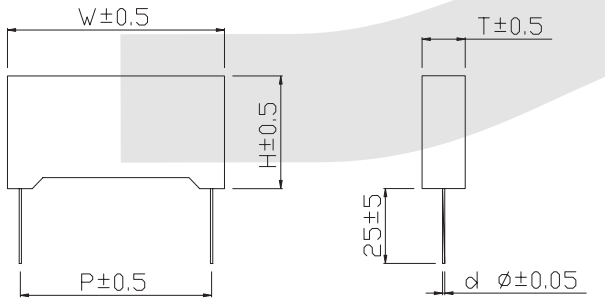

NOTE:P≥27.5 P±0.8

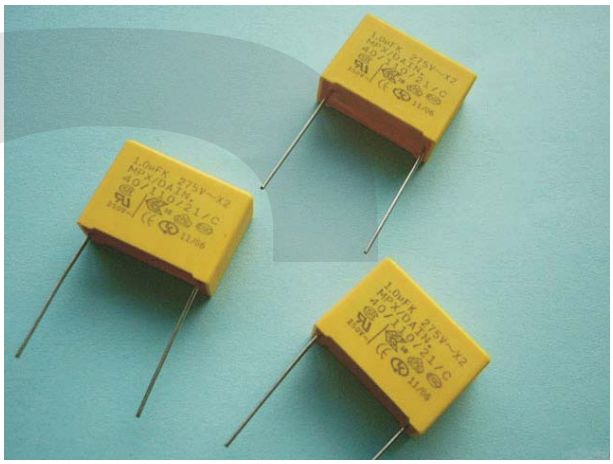

Application

LineByPass and Antenna coupling
AcrossTheline,spark killer
FMI filter
Switching power supply

Features

High stability of capacitance and DF versus wide temperature and frequency range
High transient endurance and high dielectric strength
Real long-term stability
Withstanding ovevoltage strength
Satety Approvals: According to the new revision of IEC 384-14 EN 132400. UL 1414. Approved nine countries.

Specifications

DIELECTRIC	Polypropylene/Polyester film
ELECTRODES	Vacuum evaporated metal
COATING	Encapsulated in reinforced flame retardant plastic case sealed with epoxy resin meeting the requirement of UL94V-0
LEADS	Radial leads of tinned wire / insulation flexible wire
REFERENCE STANDARD	IEC 38414 (2nd Edition,1993) UL1414,UL1283,GB/T 144721998, En132400
CLIMATIC CATALOGUE	40/85/21 (GPF) 40/100/21 (GMF)
Capacitance Versus Rated Voltage (U_R)	0.001μF~2.2μF/275VAC (50/60Hz)
CAPACITANCE TOLERANCE	M=±20% K=±10% J=±5%
Dissipationfactor (tangent of loss)	≤0.1% (PP) ≤1.0% (PE) at 20°C , 1KHz
VOLTAGE PROOF	4.3*U_R Unit:VDC (20°C , 1min)
INSULATION RESISTANCE	C≤0.33μF IR≥15,000MΩ; C>0.33μF IR*C≥5,000S (1minute at 20°C ,and Rh≤65%)
ENDURANCE	The test voltage 125% shall be applied for 1000 hours in the 85°C chamber.Each of these voltage shall be applied to each capacitor individually through a resistor of 47Ω±5%, During this period, 1000VAC 60Hz for 0.1sec be applied once each hour. After the Test: △C/C≤10%; IR ≥50% of the specified Value △DF≤0.8% (C≤1μF) △DF≤0.5%(C>1μF) (20°C , 1KHz)

ORDER INFORMATION

Product No.: KLS10 - X2 - XX - XX - X - XX

- Feet away from the
- Capacitance Tolerance
- Capacity
- Rated Voltage
- Product Name:MKP Radio Interference Suppression X2 Capacitor
- Pos.No.

Film Capacitors Series

X

MKP Radio Interference Suppression X2 Capacitor Type: MKP-X2

X2 Dimensions

Size unit :mm

sym-bol	uF	W	H	T	P	d
102	0.001	13.0	9.0	4.0	10.0	0.6
122	0.0012	13.0	9.0	4.0	10.0	0.6
152	0.0015	13.0	9.0	4.0	10.0	0.6
182	0.0018	13.0	9.0	4.0	10.0	0.6
222	0.0022	13.0	9.0	4.0	10.0	0.6
272	0.0027	13.0	9.0	4.0	10.0	0.6
332	0.0033	13.0	11.0	5.0	10.0	0.6
392	0.0039	13.0	11.0	5.0	10.0	0.6
472	0.0047	13.0	11.0	5.0	10.0	0.6
562	0.0056	13.0	11.0	5.0	10.0	0.6
682	0.0068	13.0	11.0	5.0	10.0	0.6
822	0.0082	13.0	11.0	5.0	10.0	0.6
103	0.01	13.0	9.0	4.0	10.0	0.6
103	0.01	13.0	11.0	5.0	10.0	0.6
123	0.012	13.0	11.0	5.0	10.0	0.6
153	0.015	13.0	11.0	5.0	10.0	0.6
183	0.018	13.0	11.0	5.0	10.0	0.6
223	0.022	13.0	11.0	5.0	10.0	0.6
223	0.022	18.0	10.0	5.0	15.0	0.6
273	0.027	18.0	12.0	6.0	10.0	0.6
333	0.033	18.0	12.0	6.0	10.0	0.6
333	0.033	18.0	10.0	5.0	15.0	0.6

sym-bol	uF	W	H	T	P	d
393	0.039	18.0	10.0	5.0	15.0	0.6
473	0.047	13.0	12.0	6.0	10.0	0.6
473	0.047	18.0	10.0	5.0	15.0	0.6
563	0.056	18.0	12.0	6.0	15.0	0.6
683	0.068	18.0	12.0	6.0	15.0	0.6
823	0.082	18.0	12.0	6.0	15.0	0.6
104	0.1	13.0	12.0	6.0	10.0	0.6
104	0.1	18.0	12.0	6.0	15.0	0.6
104	0.1	18.0	13.5	7.5	15.0	0.8
124	0.12	18.0	13.5	7.5	15.0	0.8
154	0.15	18.0	12.0	6.0	15.0	0.8
154	0.15	18.0	13.5	7.5	15.0	0.8
154	0.15	18.0	14.5	8.5	15.0	0.8
154	0.15	26.5	15.0	6.0	22.5	0.8
184	0.18	18.0	14.5	8.5	15.0	0.8
224	0.22	18.0	12.0	6.0	15.0	0.8
224	0.22	18.0	14.5	8.5	15.0	0.8
224	0.22	26.5	15.0	6.0	22.5	0.8
224	0.22	26.5	16.5	7.0	22.5	0.8
274	0.27	26.5	17.0	8.5	22.5	0.8
334	0.33	18.0	16.0	10.0	15.0	0.8
334	0.33	26.5	16.5	7.0	22.5	0.8

sym-bol	uF	W	H	T	P	d
334	0.33	26.5	17.0	8.5	22.5	0.8
394	0.39	26.5	18.0	10.0	22.5	0.8
474	0.47	18.0	16.0	10.0	15.0	0.8
474	0.47	18.0	18.0	10.0	15.0	0.8
474	0.47	26.5	17.0	8.5	22.5	0.8
474	0.47	26.5	18.0	10.0	22.5	0.8
474	0.47	32.0	20.0	11.0	27.5	0.8
564	0.56	32.0	20.0	11.0	27.5	0.8
684	0.68	26.5	18.0	10.0	22.5	0.8
684	0.68	32.0	20.0	11.0	27.5	0.8
824	0.82	32.0	22.0	13.0	27.5	0.8
105	1	26.0	21.5	12.0	22.5	0.8
105	1	32.0	20.0	11.0	27.5	0.8
105	1	32.0	22.0	13.0	27.5	0.8
125	1.2	32.0	30.0	15.0	27.5	0.8
155	1.5	32.0	30.0	15.0	27.5	0.8
185	1.8	31.0	31.0	18.0	27.5	0.8
225	2.2	32.0	30.0	15.0	27.5	0.8
225	2.2	31.0	31.0	18.0	27.5	0.8
225	2.2	41.0	32.5	17.5	37.5	1

- The above dimensions are for reference only. The final dimensions are subject to our specifications.

Approvals

	Sweden SS4430414 (EN132400-1994/IEC384-14)	614203
	Norway Nemko 132/85(IEC384/14-93)	P06207206
	NENMARK 132/85(IEC384/14-93)	314078-01
	FILAND IEC384/14-93	23012
	SWITZERLAND SEV 1055/1978(IEC 603841493)	06.0744

C US	USA/CSA UI1414	E152288 (N)
	GERMANY VDE 565 Teil 1/12.79	40000463
	CANADA C22.2 No.11994	LR1085341
CQC	CHINA GB/T1447293	CQC 03001002847

Ceramic Capacitors Series

X

KLS10-CC1

(50~500VDC Temperature Compensating Ceramic Capacitors Type)

CC1 Series

T.C.Temperature compensation capacitors mainly.consist of Titanium.They have the characteristics of low constant,low losses(high quality factor),high stability and linear temperature relationship.All these features suited its capability for temperature compensating mainly use in resonant circuits or in other circuits for which high Q and high temperature-base stability of circuit constant are required.



■ Specification

Operating Temperature	-25℃ ~ +85℃
Capacitance Tolerance	C (± 0.25pF) , D (± 0.5 pF) J (± 5%) , K (± 10%)
Temperature Coefficient	NPO , N750 , SL
Rated working voltage	50~160VDC,500VDC
Capacitance	Within the tolerance at 1MHz. 1±0.1Vrms,25℃
Testing voltage	2.5 times of the rated voltage
Quality factor	At 1MHz,1±0.2Vrms,25℃ C>30pF Q≥1000 ; C≤30pF Q≥400+20C
Insulation Resistance(I.R.)	At 25℃,10000MΩ or 200MΩ·uf whichever is less

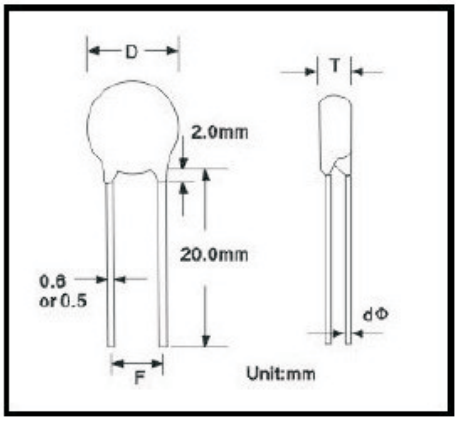

■ Capacitance Chart

Rated Voltage (VDC)	Dimensions(mm)			Capacitance(pF)		
	Dmax	Tmax	F	NPO	N750	SL
50~160	5.0	3.0	2.5 ± 0.8 or 5 ± 1.0	0.5~47	22~56	20~130
	5.5			51~56	62~82	150~220
	6.0		5 ± 1.0	62~82		
	6.5			85~100	85~120	250~270
	7.0			110~130	100~130	300~360
	7.5				180	390~430
	8.5			140~150	200~220	470~500
	9.0			180~200		510~560
	10.0			220~270		620~680
	10.5					750~820
	11.0			300~330		1000
500	5.5	4	5 ± 1.0	0.5~33	18~40	18~120
	6.0			36~56		120~180
	6.5					200~220
	7.5					230~270
	9.0					300~390
Capacitance Tolerance	＜10pf，±0.25pf，±0.5pf；　≥10pf，±5%，±10%					
Packaging Style	Bulk,Tape					

Ceramic Capacitors Series

KLS10-CC1

(50~500VDC Temperature Compensating Ceramic Capacitors Type)

X

ORDER INFORMATION

KLS10-CCI-DC50V-NPO-47PF±10%

DC(V)	
C	12
D	16
E	25
F	50
H	100
K	250
L	500

Diameter is expressed in 2 digited and if diameter has a decimal, raise it to a unit.
(ex)

Dia	Code
6.0	6
7.4	8

CODE	SHAPE
1	长直线型
3	短直线型
4	单 内 弯
5	双　弯
6	青蛙脚型

CODE	SPACE
A	2.5
B	5.0
E	7.6

CAP	CODE
560PF	561
1000PF	102
10000PF	103

TOL	CODE
±10%	K
±20%	M
+50% -20%	S
+80% -20%	Z

Ceramic Capacitors Series

KLS10-CC4 & CT4 (Radial Multilayer Ceramic Capacitors Type)

X

1.FEATURES & APPLICATIONS
This disc ceramic capacitors belong to surface layer semi-conductive construction, have characteristics such as higher capacitance ,small size etc..They are suitably used in bypass cuicuit,coupling circuit,filter circuit and isolating circuit etc..

CC4,CT4 Series

- Miniature size,wide capacitance,tape and reel packaging available for auto-placement.
- Coating by epoxy resin,creates the excellent humidity resistance and preventsbody from damaging during aoldering and washing.



■ **Brief**

T.C	NOP/COG	X7R(B)	Y5V(Y/F)	Z5U(E)
Dielectrictype	Stable class Ⅰ dielectric	Stable class Ⅱ dielectric		
Electrical properties	With negligible dependence of electrical properties on temperature,voltage, frequency and time.	With predictable change of properties with temperature,voltage, frequency and time,this dielectric is ferroelectric and offers higher capcitance ranges than class Ⅰ	With high twist dielectric constant and greater variation of properties with temperature and test conditions,very high capacitance per unit volume.	
Application	Use in ciprcuits requiring stable performance.	Use as blocking,coupling,by--passing discriminating element.	Suited for by--passing and coupling application such as store power and memory circuit.	
Capacitance range	1pf ---10nF	100pf---5uF	1nF---14.7uF	
Operating temperature	0±30ppm/℃ -55℃~+125℃	±15% -55℃~+125℃	±30%~-80% -25℃~+85℃	±22%~-56% -10℃~+85℃

■ **Electrical Properties Standard**

Item	Test standard		
	NPO(N)	X7R(B)	Z5U,Y5V(Y)
Capacitance	Within the tolerance	Within the tolerance	Within the tolerance
Dissipaton Factor	≤0.15%	≤3.5%	≤5.0%(below 220nF) ≤7.0%(220nF~470nF) ≤7.0%(220nF~470nF)
Insulation Resistance	C≤10nF IR>10000MΩ ; C>10nF R.C>500ΩF	C≤25nF IR>4000MΩ ; C>25nF R.C>100ΩF	
Voltage Test	Voltage Test:2.5.rated voltage the charging current may not exceed 50mA.Duration of test:5 seconds.		
Test Conditon			
Frequency	1M HZ (C>1000pF,1KHz)	1M HZ	
Test Voltage	1.0VDC		0.5VDC
Test Voltage pf IR	The measuring voltage isequal to the rated voltage.The charging current may not exceed 50 mA.		
Test Environment Conditions	**Temperature:** 23±2℃, **Relatively Humidity:** Below 75%, **Notice:** If test were processed under No-Standard Test Environment Conditions,test result would he error.Please deposit testing capacitors under standard Test Environment Conditions for at least 20 mins,then start to test.		

■ **Quality Item & Reliability Inspection**

Item	Test specifications			Test methods
Solderability	Termination area shall be at least 75% covered with a new solder coating			The lead wire of a capacitor shall be dipped into a 25% methanol solution of rosin and then into molten solder of 235℃±5℃ for 2±0.5 seconds,in both cases the depth of dipping is up to about 2.5 to 3.0mm from the root of lead.
Resistance to soldering heat	There shall be no evidence of damage or flash over during the test and sign in focus.	T.C	△C/C≤	The lead wire shall be immersed into the melted solder of 260℃±5℃,up to about 2.5 to 3.0mm from the main body for 5±0.5 seconds and the specified items shall be measured after leaving for 24±2 hours.
		NPO	0.5% or 0.5pF	
		B	±10%	
	D.F,IR value are equal to original datas.	Y(F)/E	±20%	
Life test	Appearance	There shall be no evidence of damage or flash over during the test and sign in focus.		Condition: NPO / X7R / Y5V / Z5U Temperature: 125℃ / 85℃ Time: T=1000h Voltage: V=1.5Vr Recovery time: 24±1h
	Value variable	NPO:≤3%; X7R:≤20%; Y5V:≤30%		
	D.F	≤2 times of original data		
	IR	R.C>25Ω.F		

Ceramic Capacitors Series

X

KLS10-CC4 & CT4 (Radial Multilayer Ceramic Capacitors Type)

■ Size Code,Capacitance And Voltage

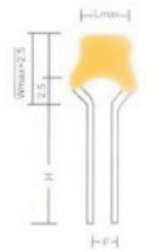
a

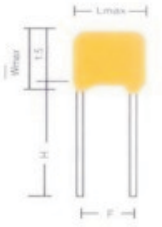
b

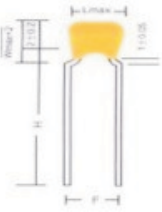
C2


C3



Size code	shape	Dimensions(mm)				Voltage	Capacitance(pF)		
		F(±0.5)	L max	W max	T max		NPO	X7R	Y5V
0805	b	2.54	4.2	3.8	3.0	25V	OR5~103	101~105	103~475
	C2	5.08				50V	OR5~103	101~474	103~105
	C3	5.08				100v	OR5~103	101~104	103~104
1206	a	2.54	5.0	4.5	3.5	25V	OR5~104	101~225	103~106
	b	3.5				50V	OR5~473	101~225	103~106
	C2	5.08				100v	OR5~473	101~105	103~155
1210	a	2.54	5.0	4.5	3.5	25V	OR5~104	101~106	103~106
	b	3.5				50V	OR5~473	101~475	103~106
	C2	5.08				100v	OR5~473	101~105	103~155
1812	b	5.08	7.0	6.0	4.0	25V	OR5~104	101~106	103~106
						50V	OR5~104	101~106	103~106
						100v	OR5~473	101~105	103~155
2225	b	5.5	10.0	9.0	4.5	25V	OR5~104	101~106	103~106
						50V	OR5~104	101~106	103~106
						100v	OR5~473	101~105	103~155
3035	b	7.5	12.0	10.0	4.5	25V	OR5~104	101~106	103~106
						50V	OR5~104	101~106	103~106
						100v	OR5~473	101~105	103~155

Notice1: Normal length of lead is 10mm(±1), it can be adjusted to 3.0~25mm as per customer's requested.
Notice2: The diameter of lead is ø0.5±0.05mm.

Ceramic Capacitors Series

X

KLS10-CC4 & CT4 (Radial Multilayer Ceramic Capacitors Type)

● Bulk
Leads in normoal length : 1000 pcs/bag
Long leads : 500 pcs/bag

● Tape & Reel

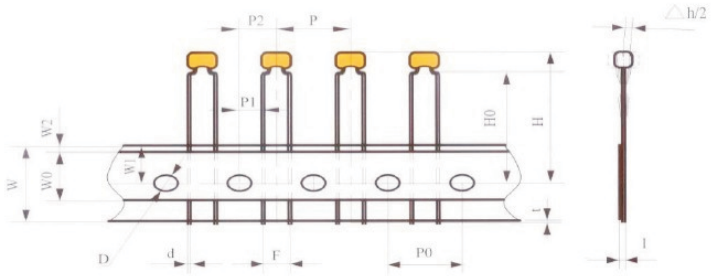

* Note: P1=3.85mm for F=5.0mm P1=5.1mm for F=2.5mm

Code	P	P0	P1	P2	d	H	W	W0	W1	W2	△h	H0	I	D	t
Dim	12.7	12.7	3.85 5.1	6.35	0.5	32.25	18.5	12	9	1.5	0	15-20	1.0	4.0	0.7
Tol	±0.2	±0.2	0.7	±1.3	±0.1	Max	±1	±1	±0.5	±1.5	±2	±0.5	Max	±0.2	Max

● Ammo packaging ● Reel packaging

ORDER INFORMATION

■ How To Order

CT4	0805	Y	104	M	50	P
↓	↓	↓	↓	↓	↓	↓
A	B	C	D	E	F	G

A:

Product type	
Code	Type
CC4	Class I dielectric radial leads
CT4	Class II dielectric radial leads

B: Unit: Inches

Cmos chip size(L×W)	
Code	Chip size
0805	0.06×0.03/0.08×0.05
1206	0.12×0.06
1210	0.12×0.10
1812	0.18×0.12
2225	0.22×0.25
3035	0.30×0.35

C:

Temperature characteristics			
N	COG(NPO)	0±30ppm/℃	(-55~+125℃)
X	X7R	±15%	(-55~+125℃)
Y(F)	Y5V	+30%~-80%	(-25~+85℃)
Z	Z5U	+22%~-56%	(+10~+85℃)

D:

Capacitance
First two digits are significant third digit is is number of zeros.
For example:104=100000pf 5R6=5.6pF

E:

Tolerance	
B	±0.10pF
C	±0.25pF
D	±0.5pF
F	±1.0%
G	±2.0%
J	±5.0%
K	±10%
M	±20%
N	±30%
S	+50%~-20%
Z	+80%~-20%
P	+100%~-0%

B,C,D For C<10pF
NPO:B,C,D,F,G,J,K,M
X7R:K,M,S,Z
Y5V/Z5U:M,S,Z,P

F:

Rated voltage
The code meaning is same as capacitance For example: 25=25V 50=50V 100=100V

G:

Packaging style		
Tape & Reel	P	Ammo
	T	Reel
Bulk	F1	2.54mm
	F2	3.5mm
	F3	5.08mm

(F1,F2,F3 is pitch size)

Ceramic Capacitors Series

KLS10-CC42 & CT42 (Axial Multilayer Ceramic Capacitors Type

X

1.FEATURES & APPLICATIONS
This disc ceramic capacitors belong to surface layer semi-conductive construction, have characteristics such as higher capacitance ,small size etc..They are suitably used in bypass cuicuit,coupling circuit,filter circuit and isolating circuit etc..

CC42,CT42 Series

- Miniature size,wide capacitance,tape and reel packaging available for auto-placement.
- Coating by epoxy resin,creates the excellent humidity resistance and preventsbody from damaging during aoldering and washing.



■ **Brief**

T.C	NOP/COG	X7R(B)	Y5V(Y/F)	Z5U(E)
Dielectrictype	Stable class Ⅰ dielectric	Stable class Ⅱ dielectric		
Electrical properties	With negligible dependence of electrical properties on temperature,voltage, frequency and time.	With predictable change of properties with temperature,voltage, frequency and time,this dielectric is ferroelectric and offers higher capcitance ranges than class Ⅰ	With high twist dielectric constant and greater variation of properties with temperature and test conditions,very high capacitance per unit volume.	
Application	Use in ciprcuits requiring stable performance.	Use as blocking,coupling,by--passing discriminating element.	Suited for by--passing and coupling application such as store power and memory circuit.	
Capacitance range	1pf ---10nF	100pf---5uF	1nF---14.7uF	
Operating temperature	0±30ppm/℃ -55℃~+125℃	±15% -55℃~+125℃	±30%~-80% -25℃~+85℃	±22%~-56% -10℃~+85℃

■ **Electrical Properties Standard**

Item	Test standard		
	NPO(N)	X7R(B)	Z5U,Y5V(Y)
Capacitance	Within the tolerance	Within the tolerance	Within the tolerance
Dissipaton Factor	≤0.15%	≤3.5%	≤5.0%(below 220nF) ≤7.0%(220nF~470nF) ≤7.0%(220nF~470nF)
Insulation Resistance	C≤10nF IR>10000MΩ ; C>10nF R.C>500ΩF	C≤25nF IR>4000MΩ ; C>25nF R.C>100ΩF	
Voltage Test	Voltage Test:2.5.rated voltage the charging current may not exceed 50mA.Duration of test:5 seconds.		
Test Conditon			
Frequency	1M HZ (C>1000pF,1KHz)	1M HZ	
Test Voltage	1.0VDC		0.5VDC
Test Voltage pf IR	The measuring voltage isequal to the rated voltage.The charging current may not exceed 50 mA.		
Test Environment Conditions	**Temperature:** 23±2℃, **Relatively Humidity:** Below 75%, **Notice:** If test were processed under No-Standard Test Environment Conditions,test result would he error.Please deposit testing capacitors under standard Test Environment Conditions for at least 20 mins,then start to test.		

■ **Quality Item & Reliability Inspection**

Item	Test specifications			Test methods
Solderability	Termination area shall be at least 75% covered with a new solder coating			The lead wire of a capacitor shall be dipped into a 25% methanol solution of rosin and then into molten solder of 235℃±5℃ for 2±0.5 seconds,in both cases the depth of dipping is up to about 2.5 to 3.0mm from the root of lead.
Resistance to soldering heat	There shall be no evidence of damage or flash over during the test and sign in focus.	T.C	△C/C≤	The lead wire shall be immersed into the melted solder of 260℃±5℃,up to about 2.5 to 3.0mm from the main body for 5±0.5 seconds and the specified items shall be measured after leaving for 24±2 hours.
		NPO	0.5% or 0.5pF	
		B	±10%	
	D.F,IR value are equal to original datas.	Y(F)/E	±20%	
Life test	Appearance	There shall be no evidence of damage or flash over during the test and sign in focus.		Condition: NPO / X7R / Y5V / Z5U Temperature: 125℃ / 85℃ Time: T=1000h Voltage: V=1.5Vr Recovery time: 24±1h
	Value variable	NPO:≤3%; X7R:≤20%; Y5V:≤30%		
	D.F	≤2 times of original data		
	IR	R.C>25Ω.F		

Ceramic Capacitors Series

X

KLS10-CC42 & CT42 (Axial Multilayer Ceramic Capacitors Type

■ Size Code,Capacitance And Voltage

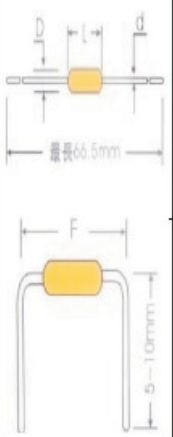

Size code	Dimensions(mm)					Voltage	Capacitance(pF)		
	L max	D max	F(±0.6)		d(±0.5)		COG(NPO)	X7R	Y5V(Z5U)
17	5.0	2.50	5.08	10.0	0.45	25V 50V 100v	OR5~103	101~105 101~224 101~223	103~105 103~105
19	7.50	3.0	7.50	10.0	0.45	25V 50V 100v		101~105 101~105 101~104	103~475 103~225

■ Packaging Style

● Tape and reel

Tape style	A	B
26mm Tape width	26±1.5mm	26±1.5mm
52mm Tape width	52±1.5mm	26±1.5mm

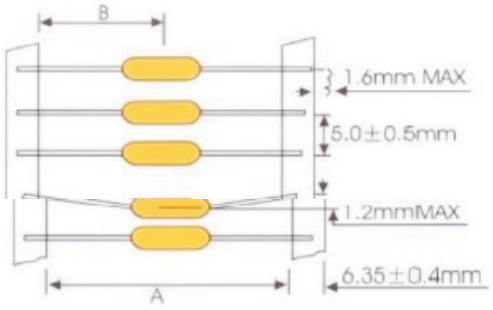

● Ammo package

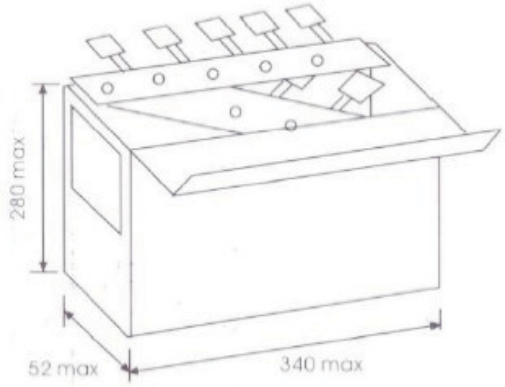

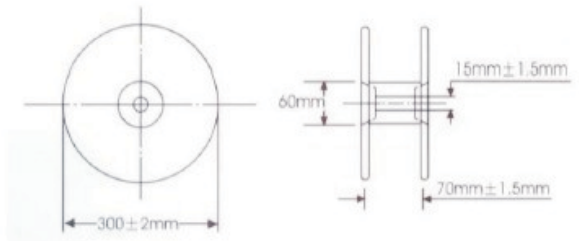

Tape style	A	B	C	D
52mm	81(±5)mm	81(±5)mm	81(±5)mm	Lable
26mm	81(±5)mm	81(±5)mm	81(±5)mm	

● Packaging quantity

Size code	Tape and reel	Ammo package	Bulk package
17	5000	5000	1000(500)
19	2500(5000)	2500(5000)	500

Ceramic Capacitors Series

KLS10-CC42 & CT42 (Axial Multilayer Ceramic Capacitors Type

X

ORDER INFORMATION

■ How To Order

CT42	—	104	M	17	Y	50	P	26
↓		↓	↓	↓	↓	↓	↓	↓
A		B	C	D	E	F	G	H

A:

Product type	
Code	Type
CC42	Class I dielectric radial leads
CT42	Class II dielectric radial leads

B:

Capacitance	
104	10×10^4 PF
5R6	5.6 PF

C:

Tolerance	
B	±0.10pF
C	±0.25pF
D	±0.5pF
F	±1.0%
G	±2.0%
J	±5.0%
K	±10%
M	±20%
N	±30%
S	+50%~-20%
Z	+80%~-20%
P	+100%~-0%

B,C,D For C<10pF
NPO:B,C,D,F,G,J,K,M
X7R:K,M,S,Z

D: Unit: Inches

Size code
17
19

E:

Temperature characteristics			
N	COG(NPO)	0±30ppm/℃	(-55~+125℃)
X	X7R	±15%	(-55~+125℃)
Y(F)	Y5V	+30%~-80%	(-25~+85℃)
Z	Z5U	+22%~-56%	(+10~+85℃)

F:

Rated voltage	
25	25V
50	50V
100	100V

G:

Packaging style	
T	Tape & Reel
P	Ammo
F	Bulk

H:

Tape style	
26	Tape width: 26mm
Blank	Tape width: 52mm

Ceramic Capacitors Series

KLS10-CSIII (Semi-Conductive Ceramic Capacitors Type)

X

1.FEATURES & APPLICATIONS
This disc ceramic capacitors belong to surface layer semi-conductive construction, have characteristics such as higher capacitance ,small size etc..They are suitably used in bypass cuicuit,coupling circuit,filter circuit and isolating circuit etc..



capacitance	0.01μF～0.22μF
capacitance tolerance	K(±10%),M(±20%),Z(+80% -20%)
operating temperature	-25℃～85℃
temperature characteristic	Y5P,Y5U,Y5V
rated voltage	16VDC,25VDC,50VDC
dissipation factor(tgδ)	16V: tgδ≤7% 25V,50V：tgδ≤3.5%（Y5P），tgδ≤5%（Y5U,Y5V） @ 1KHz,1±0.2Vrms,25℃
insulation resistance(IR)	16V: IR≥100MΩ 25V: IR≥250MΩ 50V: IR≥1000MΩ
voltage proof	1.5Ur
testing voltage	2 times the rated voltage

rated voltage	dimension		temperature characteristic						lead size	
			Y5P（B）		Y5U（E）		Y5V（F）			
（VDC）	dia.	thick	cap.	Plate Size	cap.	plate size	cap.	plate size	space	diameter
16	5.5	4.0					683～104	5320	2.5±0.8	0.40±0.05
	6.0						683～104	5620	5.0±1.0	0.45±0.05
	6.5					6225				
	7.5						124～154	7020		
	8.5						204～224	8030		
25	4.0						103～473	3816	2.5±0.8	0.40±0.05
	4.5				153～223	4225				
	5.0				333	4625				
	6.0				473	5625	683～104	5625	5.0±1.0	0.45±0.05
	6.5						683～104	6025		
	7.5				683～104	7025				
	8.5						224	8030		0.53±0.05
	11.0		104	10330						
50	4.0				103	3816	153～223	3826	2.5±0.8	0.40±0.05
	4.5				153～223	4225				
	5.0		103	4625	333	4625	133～473	4625		
	6.0		153～223	5625	473	5625	683	5625	5.0±1.0	0.45±0.05
	7.5		333	7025			104	7025		
	8.5		473	8030	683～104	8030	154	8030		0.53±0.05
	9.5						224	9030		
	12.0		104	11035						

X

Ceramic Capacitors Series

KLS10-CTII (High Dielectric Constant Ceramic Capacitors Type)

capacitance tolerance	± 10%	± 20%	+80/-20%, +50/-20%		
packing style	bulk, taping				

Class II & IIICeramic Capacitors
Codes consists of 3 digitals,where the first 2 digits indicate the lowest temperature and the highest temperature separatly,and the last digit indicates the maximum capacitance change over temperature range from 25℃.

First digital is the lowest temperature	Second digital is the highest temperature	Last digital is MAX capacitance change over temperature range from 25℃
X -55℃ Y -30℃ Z +10℃	4 +65℃ 5 +85℃ 6 +105℃ 7 +125℃ 8 +150℃	A ±1.0% B ±1.5% C ±2.2% D ±3.3% E ±4.7% F ±7.5% P ±10% R ±15% S ±22% T +22% -33% U +22% -56% V +22% -82%

• Temperature Characteristic Chart

EIA Code/International Code	NP0	N150	N220	N470	N750	SL	Y5P	Y5U	Y5V
GB Code	CH	PH	RH	TH	UJ	SL	2B4	2E4	2F4

• Temperature Characteristic and Capacitance Tolerance Chart

Temperature Characteristic	Capacitance Tolerance			
	K	M	S	Z (P)
Y5P	√	×	×	×
Y5U	×	√	×	×
Y5V	×	×	√	√

ORDER INFORMATION

Examples HLS ① 1H ② F ③ 104 ④ Z ⑤ A ⑥ 2 ⑦ B ⑧ — ⑨

① Type
② Rated Voltage
③ Temperature Characteristics
④ Nominal Capacitance
⑤ Capacitance Tolerance Symbol
⑥ Lead Style
⑦ Lead Spacing
⑧ Packaging
⑨ Internal code

X

Ceramic Capacitors Series

KLS10-CCG81 (High Power Ceramic Capacitors Type)

CCG81 Series

- Small size, withstand high voltage and easily to install
- The capacitor is used for tank circuit,coupling by-pass and feed circuit.



■ **Capacitor configuration**

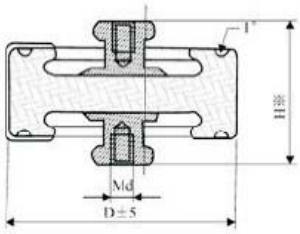

■ **Main Parameter**

Codeof type and size	Capacitance quantity(PF)		Temperature quotiety regimentation	Direct current voltage(kV)		Rating reactive power (KVA)	D	Hmm	Dm
	Nominal value	Errorallowed degree		Rating	Test				
CCG81-1	100	K	U	12	18	12	65	M6	40
	300					8			36
	500			10	15				34
CCG81-2	300			15	22	30	80		39
	500				18	15			36
CCG81-3	300			25	37	90	102	M8	59
	500			20	22				55
CCG81-4	1000			15	30	100	140		56
	1500			10	22	90			54
	2000			21	15				52
CCG81-5	1500			20	31	100	150		52
	2000			20	30	100			52
CCG81-6	1500			20	30	120	160		52
	2000			10	30	120			52
	2500				15	90			48

■ **特点与用途**

CT85环形穿芯高压交流隔离电容是我公司的专利产品，是国内唯一合法生产企业。该电容器具有频率响应极高，传输信号泄漏极小兼具有耐高交流电压（AC2KV以上），体积小等特点。

主要用于有线电视中电磁干扰（EMI）抑制装置。

■ **Features**

CT85 ring type high voltage patent AC isolation capacitor is our patent product , we are the only lawful producing factory in our country .The capacitor has characteristics such as ,high frequency response , low leakage current in transporting signal , endurance high AC voltage (more than AC2KV)and small size .

Mainly used in CA TV EMI ,controlling device .

Ceramic Capacitors Series

KLS10-CCG81 (High Power Ceramic Capacitors Type)

■产品外形尺寸及性能（参照图片）
Appearance size and function (refer the picture)





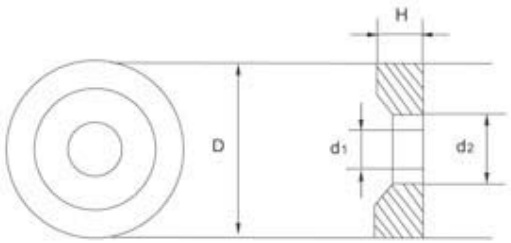

型号 Type	容量范围 Cap.(pF)	误差范围 Cap.Tol	测试耐压 Test Withstand Vol	成品尺寸 Dimensions			
				D	d1	d2	H
CT85-1	4700	+80 -20	AC2KV	20	5.0	7.0	5.2
CT85-2	6800	+80 -20	AC2KV	20	5.0	7.0	4.3
CT85-3	4700	+80 -20	AC2KV	17	5.0	7.0	3.9
CT85-4	4700	+80 -20	AC2KV	14.5	5.0	7.0	3.9

注：可根据用户特殊要求，单独设计生产。
Note:we can design and produce according to the customer' special demand.

Ceramic Capacitors Series

KLS10-CTII (High Dielectric Constant Ceramic Capacitors Type)



X

Item	Specification
Capacitance	100pF～22000pF
Capacitance Tolerance	K(±10%),M(±20%),Z(+80%-20%)
Operating Temperature	-25～85℃
Temoerature Characteristic	Y5P、Y5U、Y5V
Rated Voltage	50～160,250,500VDC
Dissipation Factor(tgδ)	tgδ≤2.5% @ 1KHz,1±0.2Vrms,25℃
Voltage Proof	2.5Ur
Insulation Resistance(IR)	IR≥10000MΩ @ 25℃,the rated voltage
Testing Voltage	3 times the rated voltage

Rated Voltage	Dimension		Temperature Characristic						Lead Size	
			Y5P (B)		Y5U (E)		Y5V (F)			
	Diameter	Thick	Nominal Cap.	Plate Size	Nominal Cap.	Plate Size	Nominal Cap.	Plate Size	Space	Diameter
50～160	5.0	3.0	221～152	4718	152～502	4718	222～682	4718	2.5±0.8	0.40±0.05
	5.5		182～222	5018	682	5018	103	5016		
	6.5		252～332	5818	822～103	6018	103	6020	5.0±1.0	0.45±0.05
	7.5		472	6818						
	8.0		502～562	7518						
	9.0		682	8520			153～223	8220		0.53±0.05
	10.5		822～103	9820						
500	5.0	4.0	151～561	4835	102～222	5040			5.0±1.0	0.45±0.05
	5.5		681～102	5035			222～332	5040		
	6.0		122	5535						
	6.5		152	6035	272～392	5840	392～562	6040		
	7.0		182	6535						
	7.5		222	7035	472～502	7040	682	7040		
	8.0		272	7535	682	7640				
	8.5						822～103	8040		
	9.0		332	8435						0.53±0.05
	9.5		392	8835	822～103	9035				
	10.5		472	9835			223	9530		
	12.5		682	11535						
	14.5		103	13535						
Capacitance Tolerance			± 10， ± 20%		± 20%		80/-20%			
Packing Style			Bulk， Taping							

Ceramic Capacitors Series

KLS10-CTII (High Dielectric Constant Ceramic Capacitors Type)

Codes consists of 3 digitals,where the first 2 digitals indicate the lowest temperature and the highest temperature separatly,and the last digital indicates the maximum capacitance change over temperature range from 25℃.

• Class Ⅱ & Ⅲ Temperature Characteristic Chart

First digital is the lowest temperature	Second digital is the highest temperature	Last digital is MAX capacitance change over temperature range from 25℃
X -55℃ Y -30℃ Z +10℃	4 +65℃ 5 +85℃ 6 +105℃ 7 +125℃ 8 +150℃	A ±1.0% B ±1.5% C ±2.2% D ±3.3% E ±4.7% F ±7.5% P ±10% R ±15% S ±22% T +22% -33% V +22% -82% U +22% -56%

• Temperature Characteristic Chart

EIA Code/ International Code	NP0	N150	N220	N470	N750	SL	Y5P	Y5U	Y5V
GB Code	CH	PH	RH	TH	UJ	SL	2B4	2E4	2F4

• Temperature Characteristic and Capacitance Tolerance Chart

Temperature Characteristic	Capacitance Tolerance			
	K	M	S	Z (P)
Y5P	√	×	×	×
Y5U	×	√	×	×
Y5V	×	×	√	√

ORDER INFORMATION

Examples HLK ① 1H ② B ③ 102 ④ K ⑤ A ⑥ 2 ⑦ B ⑧ — ⑨

① Type
② Rated Voltage
③ Temperature Characteristics
④ Nominal Capacitance
⑤ Capacitance Tolerance Symbol
⑥ Lead Style
⑦ Lead Spacing
⑧ Packaging
⑨ Internal code

Ceramic Capacitors Series

X

KLS10-HV16 (High Voltage Ceramic Capacitors Type)

OPERATING CONDITION RANGE	-10℃ to +85℃ (Z5U, Z5V)
	-25℃ to +85℃ (Y5P)
RATED WORKING VOLTAGE	1 KV – 50KVDC
CAPACITANCE RANGE	100pF – 10,000pF
TEST VOLTAGE	2 times of the rated voltage.
DISSIPATION FACTOR (tan δ)	at 1 KHz, 1±0.2 Vrms. 25℃
Y5P, Z5U .....: tan δ≤2.5%	
Z5V .....: tan δ≤5%	
INSULATION RESISTANCE	10,000 MΩ or 200 MΩ whichever is the smaller



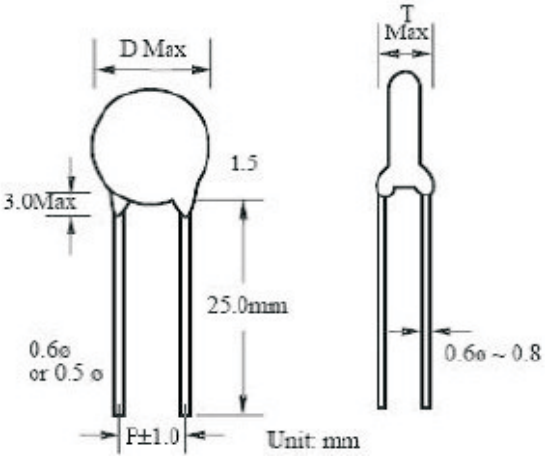

RATED W. V	SL	Y5P(B)	Y5U(E)	Y5V(F)	DIMENSION D	P	T	d
1KV	680	501	102	332	06	5	4	0.6
	101	102	222	472	07	5		0.6
	151	152		682	08	5		0.6
	221	272	562	123	10	10		0.6
			103		13	7.5		0.6
2KV	680	471	102		06	5	5	0.6
	101		222		07	5		0.6
	121	102	332		08	5		0.6
	181		472	822	10	10		0.6
			103	153	13	10		0.6
3KV		561			07	5	5	0.6
			222		08	7.5		0.6
		122	332		10	7.5		0.6
		222	562	822	13	7.5		0.6
		332			16	10		0.8
		472			19	10		0.8
4KV		471	102		07	10	5	0.6
	680	561	152	272	08	10		0.6
		102	272		10	10		0.6
		152			13	10		0.8
		222			16	10		0.8
6.3KV	390	391	102		08	10	7	0.8
			202		10	10		0.8
			302		12	10		0.8
			402		14	10		0.8
10KV		201			10	10	7	0.6
		391	102	152	12	10	8	0.8
		681	152	222	14	10		0.8
		102	222		17	10		0.8
15KV		221			08	10	9	0.8
		471	122		12	10		0.8
		681			14	10		0.8
		102	272		17	10		0.8
20KV	10~30	201~271			10	10	8	0.6
		331~511			14	10	8	0.8
		102			18	12.5	9	0.8
			472	103	24	12.5	9	0.8
30KV		102	472	103	30	15	12	1.5
40KV		102			30	15	20	1.5
50KV		102			36	15	22	1.5

Note: Specification are subject to change without notice. For more detail and update, please visit our website.

Ceramic Capacitors Series

KLS10-HV16 (High Voltage Ceramic Capacitors Type)

X

ORDER INFORMATION



DC(V)	
L	500
N	1000
R	2000
S	3000
U	10KV
V	15KV

(ex)

Dia.	code
7.6	8
11.8	12

YL=N3300
2B=Y5P
2E=Y5U Z5U
2F=Y5V Z5V

CODE	SHAPE
1	长直线型
3	短直线型
4	单 内 弯
5	双 弯
6	青蛙脚型

CODE	SPACE
B	5.0
C	6.35
D	9.5
E	7.6
F	12.5

CAP.	CODE
560PF	561
1000PF	102
10000PF	103

TOL.	CODE
± 10%	K
± 20%	M
+ 50% - 20%	S
+ 80% - 20%	Z

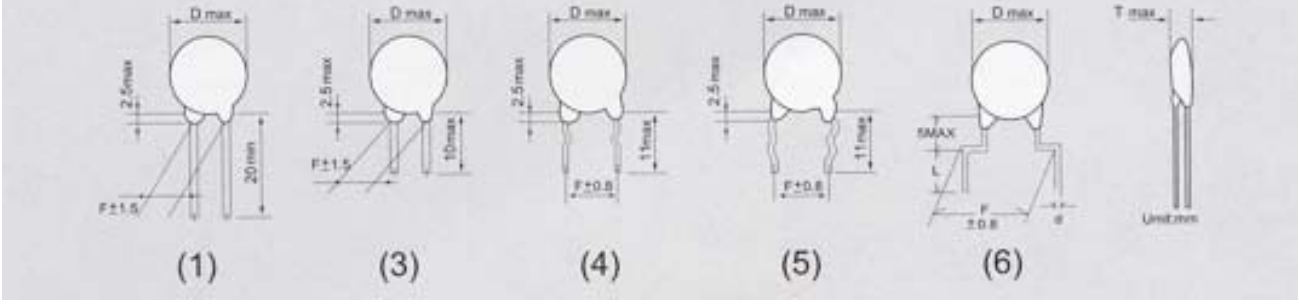

Ceramic Capacitors Series

KLS10-MLCC (SMD Multilayer Ceramic Capacitors Type)

X

MLCC Series



- Stringent dimensional tolerance allow highly reliable,high speed automatic chip mounting on PCBs.
- Terminal are plated with Ni and solder, suited to flow and reflow soldering
- High insulation resistance and high reliability
- These capacitors have temperature chatacteristics ranging from COG to Y5V, applied to general electronic equipment, instrument panel and household electric appliances

■ Capacitor Selection

The choice of dielectric is largely determined by the temperature stability required:

- **NPO(COG)**

Ultra stable C lass I dielectric, with predictable change of electrical properties on temperature,voltage, frequency and time. Used in circuits requiring stable performance.

- **X7R**

Stable Class II dielectric, with predictable change of properties with temperature,voltage,frequency and time. Used as blocking, coupling, by- passing and frequency discri minating elements.
This dielectric is ferroelectric and offers higher capacitance ranges than class I.

- **Y5V(Z5U)**

General purpose Class II dielectric with highest dielectric constant and greater variation of properties with temperature and test conditions. Very high capacitance per unit volume and suited

for application as well as filtering, transient suppression blocking, and charge storage application.

■ General Specification

	COG(NPO)	X7R	Y5V (Z5U)
Capacitance Range	0.2pF～10nF	100pF～4.7uF	1000pF～10uF
Capacitance Tolerance	Preferred ±5%, ±10%, For values ≤10pF, Preferredtolerance is ± 5%pF, also available ± 0.25pF	Preferred ±10%, ±20%.	+80%～ -20%
Operating Temperature Range	-55 ~125℃	-55 ~125℃	-30℃ ~85℃
Temperature Characteristic	0 ± 30ppm℃	within ±15%	within+22%~82%
Rated Voltage	25V,50V,100V,200V	6.3V,10V,16V,25V,50V,100V	10V,16V,25V,50V
Dissipation Factor and "Q"	C_R ≥30pF,Q ≥1000 C_R<30pF,Q ≥400+20	For 6.3V:DF≤5.0%; For 16V and10V:DF≤3.5%; For 25V min:DF≤2.5%.	For 10V:12.5% max; For 16V :9.0% max; For 25Vmin :5.0% max.
Insulation Resistance	more than 10GΩ	10GΩ min. or 500GΩ min, Whichever is less	10GΩ min. or 500GΩ min, Whichever is less
Dielectric Withstanding Voltage	250%rated voltage	250% rated voltage	250% rated voltage
Test Voltage	250%rated voltage	1 ±0.2Vrms	1 ±0.2Vrms
Test Frequency	For values≥1000pF:1KHz For values≤1000pF:1MHz	1KHz	1KHz

Ceramic Capacitors Series

X

KLS10-MLCC (SMD Multilayer Ceramic Capacitors Type)

■ Dimension, Capacitance, Voltage Table

Size	Dimension (mm)					Voltage	Capacitance		
	L	W	T	e	g min		COG(NPO)	X7R	Y5V(Z5U)
0402	1.0±0.05	0.5±0.05	0.5±0.05	0.15~0.3	0.4	10V		100pF~0.1uF	1.0nF~0.22uF
						16V		100pF~47nF	1.0nF~0.1uF
						25V	0.2pF~100pF	100pF~22nF	1.0nF~22nF
						50V		100pF~22nF	1.0nF~10nF
						100V			
						200V			
0603	1.6±0.1	0.8±0.1	0.8±0.1	0.2~0.5	0.5	10V		100pF~0.22uF	2.2nF~1.0uF
						16V		100pF~0.1uF	2.2nF~0.33uF
						25V	0.2pF~1.0nF	100pF~47nF	2.2nF~0.22uF
						50V	0.2pF~1.0nF	100pF~15nF	2.2nF~56nF
						100V	0.2pF~300pF	100pF~47nF	
						200V			
0805	2.0±0.1	1.25±0.1	0.6±0.1	0.2~0.7	0.7	10V		1.0nF~2.2uF	10nF~4.7uF
						16V		100pF~0.47uF	10nF~2.2uF
			0.85±0.1			25V	0.5pF~4.7nF	100pF~0.22uF	10nF~1.0uF
						50V	0.5pF~2.2nF	100pF~0.1uF	10nF~0.33uF
			1.25±0.1			100V	0.5pF~1.0nF	100pF~22nF	
						200V	0.5pF~470pF		
1206	3.2±0.2	1.6±0.2	0.6±0.1	0.2~0.7	0.7	10V		1.0nF~4.7uF	10nF~10uF
			0.85±0.1			16V		1.0nF~1.0uF	10nF~4.7uF
			1.15±0.1			25V	0.5pF~10nF	1.0nF~1.0uF	10nF~2.2uF
						50V	0.5pF~4.7nF	1.0nF~2.2uF	10nF~1.0uF
			0.6±0.2			100V	0.5pF~2.2nF	1.0nF~0.1uF	
						200V	0.5pF~1.0nF		

Packing

1. Tape Packing

Paper Tape: Standard taping (8mm paper width) suitable to 0603,0805,4Kpcs/reel
To 0402, 10Kpcs/reel.

Plastic Tape: Suitable 0805 · 1206 sizes, for chip thickness over 0.95 mm, 4Kpcs/reel or 3Kpcs/reel are available.

2. Dimensions of Packing Paper:

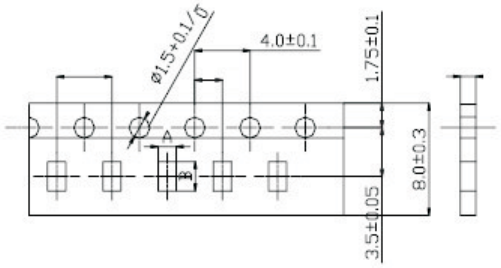

Type	A	B	C	D	T
0402	0.65±0.10	1.15±0.10	2.0±0.05	2.0±0.05	0.8max
0603	1.05±0.10	1.85±0.10	4.0±0.10	2.0±0.10	1.1max
0805	1.55±0.15	2.3±0.15	4.0±0.10	2.0±0.10	1.1max
1206	1.95±0.15	3.5±0.15	4.0±0.10	2.0±0.10	1.1max

KLS electronic
www.cnkls.com

Ceramic Capacitors Series

X

KLS10-Y1X1 (Safety Standard Ceramic Capacitors Type)



Safety Standard Recognized Ceramic Disc Capacitors (AC Capacitor)

Type	Rated Voltage	Capacitance	TC	Download
KLS10-Y1X1	X1:AC400V,Y1:AC250V	100PF-4700PF	B,E	

Dimensions

Configuration	Straigh Lead (Long)	Vertical Crimped (Long)	Inside Crimped (Short)
Lead style code	A	G	D
Dimensions (in mm)	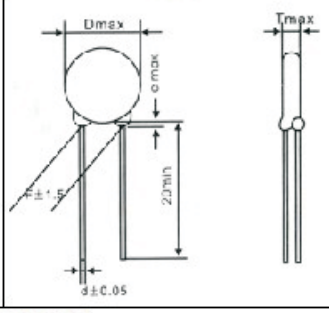	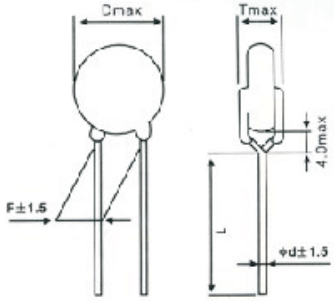	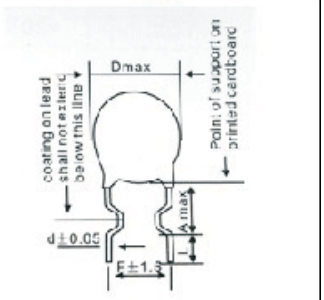

Standards Recognition

Certificated Body	Standard No.	Recognition No.	Rated Voltage
VDE (Germany)	EN 132 400:1994 (IEC60384-14 2nd Ed.)	40000353	XI:AC400V(r.m.s) Y1:AC250V
SEV (Switzerland)		CH-01-0323	
SEMKO (Sweden)		0144222/01-04	
FIMKO (Finland)		FI18303	
NEMKO (Norway)		P01101996	
DEMKO (Denmark)		311030-01	
CCEE (Chin CQC (China)	GB/14782-1998	CH0080329-2002	
CQC(China)		CQC03001005197	
UL (USA)	UL1414	E221839	AC250V (r.m.s.)
CSA (Canada)	CSA C22.2 No.1	1226874	

ORDER INFORMATION

Examples	HJ	E	222	M	A	4	B	
	①	②	③	④	⑤	⑥	⑦	⑧

① Type
② Temperature Characteristics
③ Nominal Capacitance
④ Capacitance Tolerance Symbol
⑤ Lead Style
⑥ Lead Spacing
⑦ Packaging
⑧ Internal code

All specification & dimensions are subject to change,please call your nearest KLS sales represesntative for update information

Ceramic Capacitors Series

X

KLS10-Y1X1 (Safety Standard Ceramic Capacitors Type)

IRating and Characteristics

OType HJ(IEC60384-14 Sub-class Y1 ,X1)Rating and Characteristics

Part Number	Temp. Char.	Capacitance (pF)	Capacitance Tol.	Dimensions(Unit:mm) D(max)	F±1.5	T(max)	d±0.05
HJB101K□□□	B/Y5P	100	± 10%	9.0	10.0	8.0	0.6
HJB121K□□□	B/Y5P	120	± 10%	9.0	10.0	8.0	0.6
HJB151K□□□	B/Y5P	150	± 10%	9.0	10.0	8.0	0.6
HJB181K□□□	B/Y5P	180	± 10%	9.0	10.0	8.0	0.6
HJB221K□□□	B/Y5P	220	± 10%	9.0	10.0	8.0	0.6
HJB271K□□□	B/Y5P	270	± 10%	9.0	10.0	8.0	0.6
HJB331K□□□	B/Y5P	330	± 10%	9.0	10.0	8.0	0.6
HJB391K□□□	B/Y5P	390	± 10%	9.5	10.0	8.0	0.6
HJB471K□□□	B/Y5P	470	± 10%	10	10.0	8.0	0.6
HJB561K□□□	B/Y5P	560	± i10%	11	10.0	8.0	0.6
HJB681K□□□	B/Y5P	680	± i10%	12	10.0	8.0	0.6
HJB821K□□□	B/Y5P	820	± 10%	13	10.0	8.0	0.6
HJB102K□□□	B/Y5P	1000	± 10%	14	10.0	8.0	0.6
HME471M□□□	E/Y5U	470	± 20%	9.0	10.0	8.0	0.6
HME561M□□□	E/Y5U	560	± 20%	9.0	10.0	8.0	0.6
HME681M□□□	E/Y5U	680	± 20%	9.0	10.0	8.0	0.6
HME102M□□□	E/Y5U	1000	± 20%	10	10.0	8.0	0.6
HME122M□□□	E/Y5U	1200	± 20%	10	10.0	8.0	0.6
HME152M□□□	E/Y5U	1500	± 20%	11	10.0	8.0	0.6
HME182M□□□	E/Y5U	1800	± 20%	12.5	10.0	8.0	0.6
HME222M□□□	E/Y5U	2200	± 20%	13.5	10.0	8.0	0.6
HME272M□□□	E/Y5U	2700	± 20%	14	10.0	8.0	0.6
HMF332M□□□	F/Y5U	3300	± 20%	16	10.0	8.0	0.6
HMF392M□□□	F/Y5U	3900	± 20%	17	10.0	8.0	0.6
HMF472M□□□	F/Y5U	4700	± 20%	18	10.0	8.0	0.6

Marking

Marking item		Example
Manuafacture's Identification		
Type Designation	KLS10-Y1X1	
Nominal Capacitance (Marked With 3 figures	222(2200pF)	
Capacitance tolerance	K(±10%) , M(±20%)	
Sub-Class Code and Rated Voltage	X1:400V~ Y1:250V~	
Recognized Marking (Logo or Monogram)	VDE, SEV, DEMKO, CCEE, SEMKO, CQC, FIMKO, CSA, NEMKO, UL	

KLS electronic
www.cnkls.com

Ceramic Capacitors Series

X

KLS10-Y2X1 (Safety Standard Ceramic Capacitors Type)



Safety Standard Recognized Ceramic Disc Capacitors (AC Capacitor)

Type	Rated Voltage	Capacitance	TC	Download
KLS10-Y2X1	X1:AC400V,Y2:AC250V	100PF-10000PF	B,E,F	

Dimensions

Configuration	Straigh Lead (Long)	Vertical Crimped (Long)	Inside Crimped (Short)
Lead style code	A	G	D
Dimensions (in mm)	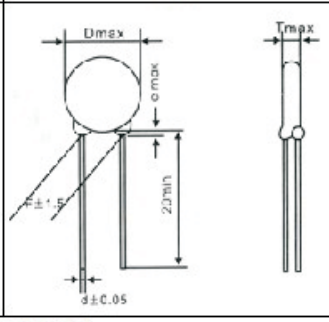	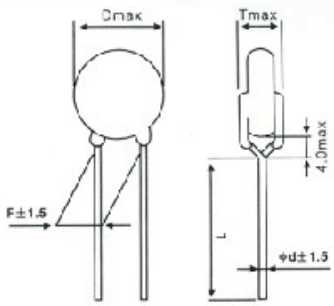	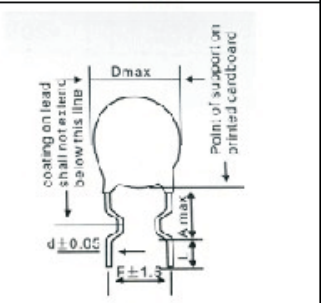

Standards Recognition

Certificated Body	Standard No.	Recognition No.	Rated Voltage
VDE (Germany)	EN 132 400:1994 (IEC60384-14 2nd Ed.)	40000353	XI:AC400V(r.m.s) Y1:AC250V
SEV (Switzerland)		CH-01-0323	
SEMKO (Sweden)		0144222/01-04	
FIMKO (Finland)		FI18303	
NEMKO (Norway)		P01101996	
DEMKO (Denmark)		311030-01	
CCEE (Chin CQC (China)	GB/14782-1998	CH0080329-2002	
CQC(China)		CQC03001005197	
UL (USA)	UL1414	E221839	AC250V (r.m.s.)
CSA (Canada)	CSA C22.2 No.1	1226874	

ORDER INFORMATION

Examples HM ① F ② 222 ③ M ④ A ⑤ 3 ⑥ B ⑦ ⑧

① Type
② Temperature Characteristics
③ Nominal Capacitance
④ Capacitance Tolerance Symbol
⑤ Lead Style
⑥ Lead Spacing
⑦ Packaging
⑧ Internal code

All specification & dimensions are subject to change,please call your nearest KLS sales represesntative for update information

Ceramic Capacitors Series

X

KLS10-Y2X1 (Safety Standard Ceramic Capacitors Type)

IRating and Characteristics

OType HJ(IEC60384-14 Sub-class Y1 ,X1)Rating and Characteristics

Part Number	Temp. Char.	Capacitance (pF)	Capacitance Tol.	Dimensions(Unit:mm) D(max)	F±1.5	T(max)	d±0.05
HJB101K□□□	B/Y5P	100	± 10%	9.0	10.0	8.0	0.6
HJB121K□□□	B/Y5P	120	± 10%	9.0	10.0	8.0	0.6
HJB151K□□□	B/Y5P	150	± 10%	9.0	10.0	8.0	0.6
HJB181K□□□	B/Y5P	180	± 10%	9.0	10.0	8.0	0.6
HJB221K□□□	B/Y5P	220	± 10%	9.0	10.0	8.0	0.6
HJB271K□□□	B/Y5P	270	± 10%	9.0	10.0	8.0	0.6
HJB331K□□□	B/Y5P	330	± 10%	9.0	10.0	8.0	0.6
HJB391K□□□	B/Y5P	390	± 10%	9.5	10.0	8.0	0.6
HJB471K□□□	B/Y5P	470	± 10%	10	10.0	8.0	0.6
HJB561K□□□	B/Y5P	560	± i10%	11	10.0	8.0	0.6
HJB681K□□□	B/Y5P	680	± i10%	12	10.0	8.0	0.6
HJB821K□□□	B/Y5P	820	± 10%	13	10.0	8.0	0.6
HJB102K□□□	B/Y5P	1000	± 10%	14	10.0	8.0	0.6
HME471M□□□	E/Y5U	470	± 20%	9.0	10.0	8.0	0.6
HME561M□□□	E/Y5U	560	± 20%	9.0	10.0	8.0	0.6
HME681M□□□	E/Y5U	680	± 20%	9.0	10.0	8.0	0.6
HME102M□□□	E/Y5U	1000	± 20%	10	10.0	8.0	0.6
HME122M□□□	E/Y5U	1200	± 20%	10	10.0	8.0	0.6
HME152M□□□	E/Y5U	1500	± 20%	11	10.0	8.0	0.6
HME182M□□□	E/Y5U	1800	± 20%	12.5	10.0	8.0	0.6
HME222M□□□	E/Y5U	2200	± 20%	13.5	10.0	8.0	0.6
HME272M□□□	E/Y5U	2700	± 20%	14	10.0	8.0	0.6
HMF332M□□□	F/Y5U	3300	± 20%	16	10.0	8.0	0.6
HMF392M□□□	F/Y5U	3900	± 20%	17	10.0	8.0	0.6
HMF472M□□□	F/Y5U	4700	± 20%	18	10.0	8.0	0.6

□Packing Code:B(Bulk),A(Ammo Pack) □Lead Spacing Code □Lead Style Code

Marking

Marking item		Example
Manuafacture's Identification		
Type Designation	KLS10-Y2X1	
Nominal Capacitance (Marked With 3 figures	122(1200pF)	
Capacitance tolerance	K(±10%) , M(±20%)	
Sub-Class Code and Rated Voltage	X1:400V~ Y2:250V~	
Recognized Marking (Logo or Monogram)	VDE, SEV, DEMKO, CCEE, SEMKO, CQC, FIMKO, CSA, NEMKO, UL	

DIP INDUCTORS Series

KLS18-VC

Test Equipment :
L: 4284A PRECISION LCR METER
SRF:HM 9461 L-SRF meter
DCR: CHEN HWA 502BC OHM METER
Features :
- Low cost power inductors
- High rated current for High current circuits.
- Have lot of dimensions to choose.

Applications :
- TVs and Audio equipment
- Telecommunication devices
- RF filters



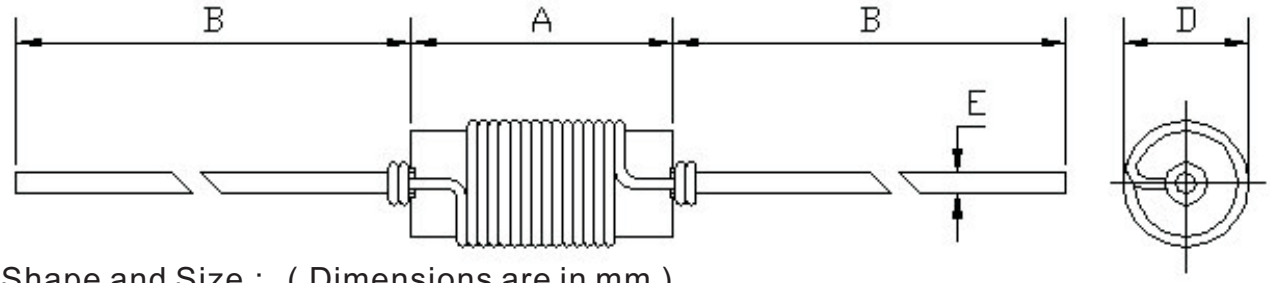

Shape and Size : (Dimensions are in mm)

P/N	A max	B	D ± 0.1	E±0.05
VC0310	10.5	26.0±2.0	4.5	0.65
VC0410	10.5	26.0±2.0	5.5	0.80
VC0513	16.5	26.0±2.0	6.6	0.80
VC1019	23.0	26.0±2.0	11.5	0.80

Order Information

KLS18-VC 0513 - 100 K
1 2 3 4

1. TYPE: KLS18-VC (AXIAL LEADED FIXED INDUCTORS)
2. CORE Size :0310,0410,0513,1019
3. Inductance :100K
4. Tolerance : J 5%,K 10%,L 15%,M 20%,N 30%

DIP INDUCTORS Series

KLS18-VC

Part Number	Inductance (μH)	IDC(mA) (Max)	DCR(Ω) Max	Part Number	Inductance (μH)	IDC(mA) (Max)	DCR(Ω) Max	Part Number	Inductance (μH)	IDC(mA) (Max)	DCR(Ω) Max
0310-1R0M	1	1800	0.017	0513-3R9K	3.9	1280	0.019	1019-8R2K	8.2	4	0.013
0310-2R2K	1.2	1600	0.025	0513-4R7K	4.7	1280	0.022	1019-100K	10	4	0.017
0310-4R7K	4.7	1400	0.09	0513-5R6K	5.6	1280	0.024	1019-120K	12	4	0.019
0310-100K	10	1200	0.22	0513-6R8K	6.8	1280	0.026	1019-150K	15	4	0.022
				0513-8R2K	8.2	1280	0.028	1019-180K	18	4	0.023
0410-R15K	0.15	1850	0.018	0513-100K	10	1280	0.033	1019-220K	22	4	0.026
0410-R18K	0.18	1800	0.022	0513-120K	12	1280	0.037	1019-270K	27	4	0.027
0410-R22K	0.22	1740	0.029	0513-150K	15	1280	0.04	1019-330K	33	4	0.032
0410-R27K	0.27	1680	0.032	0513-180K	18	1280	0.044	1019-390K	39	4	0.033
0410-R33K	0.33	1610	0.035	0513-220K	22	1280	0.05	1019-470K	47	4	0.035
0410-R39K	0.39	1540	0.039	0513-270K	27	1280	0.058	1019-560K	56	3.2	0.037
0410-R47K	0.47	1430	0.049	0513-330K	33	1008	0.075	1019-680K	68	2.5	0.047
0410-R56K	0.56	1320	0.078	0513-390K	39	804	0.094	1019-820K	82	2	0.06
0410-R68K	0.68	1200	0.09	0513-470K	47	804	0.109	1019-101K	100	1.6	0.09
0410-R82K	0.82	1130	0.1	0513-560K	56	804	0.14	1019-121K	120	1.6	0.113
0410-1R0K	1	1020	0.105	0513-680K	68	804	0.145	1019-151K	150	1.6	0.129
0410-1R2K	1.2	1580	0.063	0513-820K	82	804	0.152	1019-181K	180	1.6	0.15
0410-1R5K	1.5	1500	0.071	0513-101K	100	632	0.208	1019-221K	220	1.6	0.162
0410-1R8K	1.8	1450	0.078	0513-121K	120	508	0.283	1019-271K	270	1.6	0.208
0410-2R2K	2.2	1380	0.088	0513-151K	150	508	0.34	1019-331K	330	1.6	0.212
0410-2R7K	2.7	1320	0.098	0513-181K	180	508	0.362	1019-391K	390	1.6	0.281
0410-3R3K	3.3	870	0.205	0513-221K	220	508	0.43	1019-471K	470	1.2	0.38
0410-3R9K	3.9	840	0.225	0513-271K	270	400	0.557	1019-561K	560	1	0.42
0410-4R7K	4.7	800	0.25	0513-331K	330	400	0.665	1019-681K	680	1	0.548
0410-5R6K	5.6	750	0.28	0513-391K	390	400	0.772	1019-821K	820	0.8	0.655
0410-6R8K	6.8	710	0.31	0513-471K	470	315	1.15	1019-102K	1,000	0.8	0.844
0410-8R2K	8.2	680	0.35	0513-561K	560	315	1.27	1019-122K	1,200	0.6	1.04
0410-100K	10	640	0.39	0513-681K	680	250	1.61	1019-152K	1,500	0.6	1.18
0410-120K	12	450	0.67	0513-821K	820	200	1.96	1019-182K	1,800	0.6	1.56
0410-150K	15	430	0.76	0513-102K	1000	200	2.3	1019-222K	2,200	0.5	2
0410-180K	18	410	0.85	0513-122K	1200	200	2.65	1019-272K	2,700	0.4	2.06
0410-220K	22	390	0.96	0513-152K	1500	158	3.45	1019-332K	3,300	0.4	2.53
0410-270K	27	360	1.1	0513-182K	1800	158	4.03	1019-392K	3,900	0.4	2.75
0410-330K	33	345	1.24	0513-222K	2200	158	4.48	1019-472K	4,700	0.4	3.19
0410-390K	39	330	1.37	0513-272K	2700	125	5.9	1019-562K	5,600	0.315	3.92
0410-470K	47	315	1.55	0513-332K	3300	125	6.56	1019-682K	6,800	0.25	5.69
0410-560K	56	300	1.95	0513-392K	3900	100	8.63	1019-822K	8,200	0.25	6.32
				0513-472K	4700	100	10.5	1019-103K	10,000	0.25	7.3
				0513-562K	5600	82	13.9	1019-123K	12,000	0.2	9.21
				0513-682K	6800	82	16.3	1019-153K	15,000	0.2	10.5
				0513-822K	8200	65	20.8	1019-183K	18,000	0.158	14.8
				0513-103K	10000	50	26.4	1019-223K	22,000	0.125	21.8
				0513-123K	12000	50	29.2	1019-273K	27,000	0.125	22.7
				0513-153K	15000	39	42.5	1019-333K	33,000	0.125	25.7
				0513-183K	18000	39	48.3	1019-393K	39,000	0.1	31.8
								1019-473K	47,000	0.1	36.1
				1019-3R9K	3.9	4	0.007	1019-563K	56,000	0.1	40.9
				1019-4R7K	4.7	4	0.008	1019-683K	68,000	0.082	57.3
				1019-5R6K	5.6	4	0.011	1019-823K	82,000	0.065	79.3
				1019-6R8K	6.8	4	0.011	1019-104K	100,000	0.065	89.7

1- Features:

* Incorporation of a special lead wire structure entirely eliminates defects inherent in existing axial lead type products and prevents lead breakage.
* The special magnetic core structure permits the product to have both reduced size and high-Q, self-resonant
* The products are epoxy-resin coated against humidity to ensure longer life.

2- Characteristics

Rated temperature range ..... -20℃ to +100°C
Dielectric withstanding voltage……..250 Vr.m.s.
Rated current..... Based on temperature rise
Terminal tensile strength ……1.0KG min.
Terminal bending strength ……....0.3KG min.
Moisture resistancecharacteristic ……..△L/L?5%,△Q/Q?20%

3- How to order :

Example : KLS18-EC22 - 101 - K - A
(1) (2) (3) (4)

(1): Leads code (see table below)
(2): Inductance code (see table below)
(3):Tolerance : M:±20% K:±10% J:±5%
(4): A-Box Roll B-Bulk Packing

(1)- Leads Code & Dimension

Leads code	A (Max)	W±1	ØD (Max)	ØE (±0.05)
EC22	4	60	2.8	0.5
EC24	7	60	3	0.5
EC36	10	60	4	0.65
EC46	12	60	5	0.65

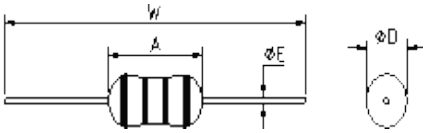

(Standard Leads Stype)

Leads code	A (Max)	B (Min)	C (±1.0)	ØD (Max)	ØE (±0.05)
EC22U	4.5	3.6	10	2.8	0.5
EC24U	7	3.6	10	3	0.5
EC36U	10	3.6	12.5	4	0.65
EC46U	12	4	15	5	0.65

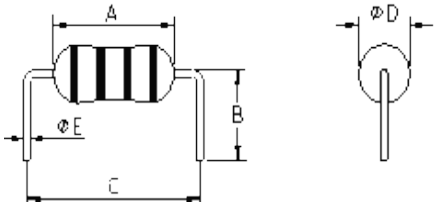

(U Leads Stype)

Leads code	A (Max)	B (Min)	C (Max)	Ø (Max)	ØE (±0.05)	F±1
EC22F	4	3.6	4	2.8	0.5	3
EC24F	7	3.6	6	3	0.5	5
EC36F	10	4	8	4	0.65	5
EC46F	12	4	8	5	0.65	5

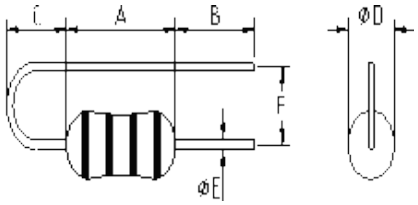

(F Leads Stype)

(2) Inductance Code :

Inductance Code	INDUCTANCE	TEST FREQ	SRF (min)	Q MIN	DCR	IDC(mA)
	(μH)	(MHz)	(MHz)		(MAX) (Ω)	(MAX)
EC22-R10M	0.1	25.2	250	50	0.03	700
EC22-R12M	0.12	25.2	230	55	0.035	660
EC22-R15M	0.15	25.2	200	55	0.04	620
EC22-R18M	0.18	25.2	180	55	0.045	600
EC22-R22M	0.22	25.2	160	55	0.05	400
EC22-R27M	0.27	25.2	150	50	0.065	380
EC22-R33M	0.33	25.2	150	50	0.075	370
EC22-R39M	0.39	25.2	150	50	0.08	350
EC22-R47M	0.47	25.2	150	60	0.085	330
EC22-R56M	0.56	25.2	150	60	0.09	320
EC22-R68M	0.68	25.2	120	50	0.1	310
EC22-R82M	0.82	25.2	110	50	0.15	290
EC22-1R0K	1	25.2	110	50	0.22	270
EC22-1R2K	1.2	7.96	100	40	0.3	260
EC22-1R5K	1.5	7.96	80	40	0.35	250
EC22-1R8K	1.8	7.96	65	40	0.45	240
EC22-2R2K	2.2	7.96	55	40	0.55	230
EC22-2R7K	2.7	7.96	50	40	0.6	220
EC22-3R3K	3.3	7.96	42	40	0.65	210
EC22-3R9K	3.9	7.96	38	45	0.85	200
EC22-4R7K	4.7	7.96	34	45	1	190
EC22-5R6K	5.6	7.96	32	45	1.15	180
EC22-6R8K	6.8	7.96	30	40	1.2	175
EC22-8R2K	8.2	7.96	26	40	1.25	165
EC22-100K	10	7.96	24	40	1.5	160
EC22-120K	12	2.52	22	50	2.2	150
EC22-150K	15	2.52	20	50	2.5	145
EC22-180K	18	2.52	18	50	2.8	140
EC22-220K	22	2.52	17	50	3	130
EC22-270K	27	2.52	14	55	3.5	80
EC22-330K	33	2.52	14	55	3.8	76
EC22-390K	39	2.52	13	50	4.2	74
EC22-470K	47	2.52	12	50	5.8	70
EC22-560K	56	2.52	11	50	6.4	68
EC22-680K	68	2.52	10	50	7.2	64
EC22-820K	82	2.52	9.5	50	8.5	46
EC22-101K	100	2.52	9	50	11	44
EC22-121K	120	0.796	6.5	30	19	42
EC22-151K	150	0.796	6	30	22	39
EC22-181K	180	0.796	5.2	30	24	37
EC22-221K	220	0.796	4.5	30	28	35
EC22-271K	270	0.796	3.5	30	29	28
EC22-331K	330	0.796	3	30	30	26
EC22-391K	390	0.796	2.7	30	32	25
EC22-471K	470	0.796	2.6	30	35	24
EC22-561K	560	0.796	2.5	30	40	23
EC22-681K	680	0.796	2.2	30	42	22
EC22-821K	820	0.796	2.1	30	46	21
EC22-102K	1000	0.796	2	30	52	20
EC24-R10K	0.1	25.2	470	30	0.08	700
EC24-R12K	0.12	25.2	450	40	0.08	700
EC24-R15K	0.15	25.2	430	40	0.09	700
EC24-R18K	0.18	25.2	410	40	0.1	700
EC24-R22K	0.22	25.2	380	40	0.12	700
EC24-R27K	0.27	25.2	360	40	0.15	680
EC24-R33K	0.33	25.2	350	40	0.16	680
EC24-R39K	0.39	25.2	320	40	0.18	680
EC24-R47K	0.47	25.2	300	40	0.26	650
EC24-R56K	0.56	25.2	280	40	0.38	500
EC24-R68K	0.68	25.2	250	40	0.42	500

EC24-R82K	0.82	25.2	200	40	0.55	450
EC24-1R0K	1	25.2	180	65	0.12	700
EC24-1R2K	1.2	7.96	165	50	0.18	740
EC24-1R5K	1.5	7.96	150	50	0.2	700
EC24-1R8K	1.8	7.96	125	70	0.23	655
EC24-2R2K	2.2	7.96	110	50	0.25	630
EC24-2R7K	2.7	7.96	95	60	0.28	595
EC24-3R3K	3.3	7.96	75	60	0.3	575
EC24-3R9K	3.9	7.96	65	60	0.32	555
EC24-4R7K	4.7	7.96	50	50	0.35	530
EC24-5R6K	5.6	7.96	40	50	0.4	500
EC24-6R8K	6.8	7.96	30	50	0.45	470
EC24-8R2K	8.2	7.96	28	50	0.55	425
EC24-100K	10	7.96	22	50	0.72	370
EC24-120K	12	2.52	20	50	0.8	350
EC24-150K	15	2.52	16	50	0.88	335
EC24-180K	18	2.52	15	50	1	315
EC24-220K	22	2.52	13	60	1.2	285
EC24-270K	27	2.52	11	60	1.35	270
EC24-330K	33	2.52	10	50	1.5	255
EC24-390K	39	2.52	9.5	50	1.7	240
EC24-470K	47	2.52	8.5	60	2.3	205
EC24-560K	56	2.52	7.5	60	2.6	195
EC24-680K	68	2.52	6.5	60	2.9	185
EC24-820K	82	2.52	6	55	3.2	175
EC24-101K	100	2.52	5.5	60	3.5	165
EC24-121K	120	0.796	5.4	75	3.8	160
EC24-151K	150	0.796	4.75	75	4.4	150
EC24-181K	180	0.796	4.35	75	5	140
EC24-221K	220	0.796	4	75	5.7	130
EC24-271K	270	0.796	3.7	70	6.5	120
EC24-331K	330	0.796	3.4	70	9.5	100
EC24-391K	390	0.796	2.8	70	10.5	95
EC24-471K	470	0.796	2.4	70	12.5	90
EC24-561K	560	0.796	2.35	70	14.5	85
EC24-681K	680	0.796	2	70	18	75
EC24-821K	820	0.796	1.6	60	23.7	65
EC24-102K	1000	0.796	1.2	60	30	60
EC36-R10K	0.1	25.2	470	50	0.04	900
EC36-R12K	0.12	25.2	450	50	0.06	900
EC36-R15K	0.15	25.2	430	50	0.07	890
EC36-R18K	0.18	25.2	410	50	0.07	890
EC36-R22K	0.22	25.2	380	50	0.08	880
EC36-R27K	0.27	25.2	340	50	0.09	800
EC36-R33K	0.33	25.2	300	50	0.1	750
EC36-R39K	0.39	25.2	280	50	0.12	680
EC36-R47K	0.47	25.2	250	50	0.16	650
EC36-R56K	0.56	25.2	230	50	0.18	600
EC36-R68K	0.68	25.2	210	50	0.22	550
EC36-R82K	0.82	25.2	172	50	0.24	980
EC36-1R0K	1	25.2	157	50	0.09	920
EC36-1R2K	1.2	7.96	144	50	0.1	880
EC36-1R5K	1.5	7.96	131	55	0.23	830
EC36-1R8K	1.8	7.96	121	60	0.25	790
EC36-2R2K	2.2	7.96	110	80	0.28	750
EC36-2R7K	2.7	7.96	100	85	0.3	720
EC36-3R3K	3.3	7.96	94	90	0.34	670
EC36-3R9K	3.9	7.96	86	90	0.37	640
EC36-4R7K	4.7	7.96	80	90	0.39	620
EC36-5R6K	5.6	7.96	74	80	0.43	590
EC36-6R8K	6.8	7.96	58	80	0.48	550
EC36-8R2K	8.2	7.96	53	85	0.52	530
EC36-100K	10	7.96	45	85	0.58	500
EC36-120K	12	2.52	30	75	0.63	480

EC36-150K	15	2.52	20	75	0.72	460
EC36-180K	18	2.52	14	70	0.77	430
EC36-220K	22	2.52	9.9	65	0.84	410
EC36-270K	27	2.52	7.6	65	0.94	390
EC36-330K	33	2.52	6.3	55	1.03	370
EC36-390K	39	2.52	6.3	55	1.12	350
EC36-470K	47	2.52	6.3	45	1.22	340
EC36-560K	56	2.52	6.2	45	1.34	320
EC36-680K	68	2.52	5.7	40	1.47	305
EC36-820K	82	2.52	5.3	35	1.62	290
EC36-101K	100	2.52	4.8	30	1.8	275
EC36-121K	120	0.796	3.8	70	3.7	185
EC36-151K	150	0.796	3.5	80	4.2	175
EC36-181K	180	0.796	3.3	80	4.6	165
EC36-221K	220	0.796	3	70	5.1	155
EC36-271K	270	0.796	2.8	70	5.8	145
EC36-331K	330	0.796	2.6	65	6.4	137
EC36-391K	390	0.796	2.4	65	7	133
EC36-471K	470	0.796	2.25	60	7.7	126
EC36-561K	560	0.796	2.1	60	8.5	120
EC36-681K	680	0.796	1.95	55	9.4	113
EC36-821K	820	0.796	1.85	55	12	100
EC36-102K	1000	0.252	1.4	50	17	100
EC46-122K	1200	@1KHz	252	80	9	75
EC46-152K	1500	@1KHz	252	80	10	69
EC46-182K	1800	@1KHz	252	80	11	60
EC46-222K	2200	@1KHz	252	80	14	58
EC46-272K	2700	@1KHz	252	80	18	52
EC46-332K	3300	@1KHz	252	80	22	48
EC46-392K	3900	@1KHz	252	80	26	45
EC46-472K	4700	@1KHz	252	80	30	40
EC46-562K	5600	@1KHz	252	70	34	37
EC46-682K	6800	@1KHz	252	70	45	34
EC46-822K	8200	@1KHz	252	50	60	31
EC46-103K	10000	@1KHz	79.6	50	70	28
EC46-123K	12000	@1KHz	79.6	50	82	24
EC46-153K	15000	@1KHz	79.6	50	89	22
EC46-183K	18000	@1KHz	79.6	40	140	14
EC46-223K	22000	@1KHz	79.6	40	170	12
EC46-253K	25000	@1KHz	79.6	40	185	11
EC46-273K	27000	@1KHz	79.6	40	210	9.5
EC46-303K	30000	@1KHz	79.6	40	240	8.5
EC46-333K	33000	@1KHz	79.6	40	250	8

Color Code :

Color	Significant	figure	Multiplier Inductance tolerance(%)
Black	0	1	-
Brown	1	10	-
Red	2	100	-
Orange	3	1000	-
Yellow	4	-	-
Green	5	-	-
Blue	6	-	-
Violet	7	-	-
Gray	8	-	-
White	9	-	-
Black	-	-	±20
Silver	-	0.01	±10
Gold	-	0.1	±5

DIP INDUCTORS Series

KLS18-FC DIP Inductors Series

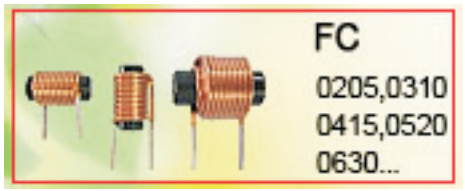

Shape and size : (Dimensions are in mm)



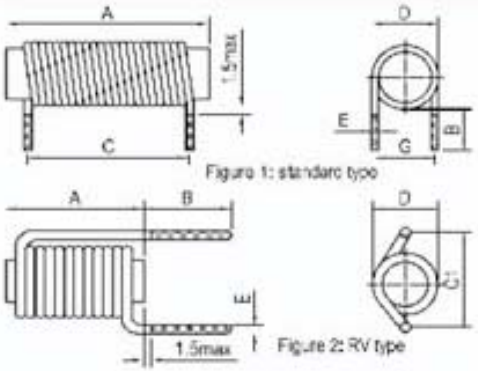

3L P/N	Fig1: standard type			Fig2
	A max	D max	C ref	C1 ref
FC0205	6.0	3.5	3.5	3.5
FC0310	11.0	5.0	7.5	5.0
FC0415	16.0	5.5	12.5	6.0
FC0520	21.0	7.0	15.0	8.0
FC0630	31.0	9.5	25.0	10.0

Features :

- High saturation current .
- General purpose inductors .
- Low cost design .
- Tinplated leads .
- Varnish coated or UL tube.

Inductance and rated current ranges :

· FC0205	1.0uH ~ 1.2uH	0.56A
· FC0310	1.8uH ~ 4.7uH	1.9 A ~ 0.76A
· FC0415	4.7uH ~ 10 uH	2.26 A ~ 1.0A
· FC0520	10 uH ~ 27 uH	2.65 A ~ 1.0A
· FC0630	4.7uH ~ 56uH	16.08A ~ 1.57A

· FC0525 / 0820 / 0828 / 0832 / 0840 / 1020 / 1025 / 1040 Please see the specification sheet.

Test equipments and test setup :

L tested by LCR meter @ 1kHz .

DCR tested by Milli-ohm meter .

· Electrical specifications at 25℃.

Ordering information :

FC 0520 - 100 K - 8RV - UL

(1) (2) (3) (4) (5) (6)

(1) Type : **B**asic model high current choke .

(2) Style : Core **D**=5 mm **L**=20 mm .

(3) Inductance : Example : **100** for **10** uH

(4) Inductance tolerance : **K** : ±10% ; **M**: ± 20% .

(5) Shape: **8RV** is **8**mm length PIN and **R**ight wound and **V**ertical structure; No code is normal type.

(6) Sleeve:"**UL**": Black UL Tube; No code is no sleeve.

Characteristics :

- Suggested rated current: copper wire current density about 8.0 A/mm^2.
- Operating temperature : -20 ℃ to 80 ℃ .

Applications :

- Power supplies .
- Power amplifiers .
- Noise filter for Switching regulators .
- SCR and Triac circuits .

DIP INDUCTORS Series

KLS18-FC DIP Inductors Series

Part No.	L @1KHz (uH)	DCR (Ohm) Max.	Suggested rated Current AC (A) Ref.	SRF (MHz) Min.	Wire Size (mm)	No. of Turns Ref.	Net Weight g/pcs
FC0205-1R0K	**1.0**	**0.040**	**0.56**	**200**	**0.30**	**11.5**	**0.150**
FC0205-1R2K	1.2	0.040	0.56	180	0.30	12.5	0.165
FC0310-1R8K	1.8	0.026	1.90	160	0.55	11.5	0.70
FC0310-2R2K	2.2	0.028	1.57	150	0.50	13.5	0.714
FC0310-2R7K	2.7	0.030	1.57	140	0.50	15.5	0.729
FC0310-3R3K	3.3	0.035	1.27	135	0.45	17.5	0.686
FC0310-3R9K	3.9	0.050	1.00	110	0.40	18.5	0.634
FC0310-4R7K	4.7	0.070	0.76	90	0.35	19.5	0.575
FC0415-4R7K	4.7	0.240	2.26	90	0.60	17.5	1.60
FC0415-5R6K	5.6	0.030	1.90	80	0.55	18.5	1.40
FC0415-6R8K	6.8	0.040	1.57	80	0.50	18.5	1.40
FC0415-8R2K	8.2	0.060	1.27	80	0.45	21.5	1.32
FC0415-100K	**10**	**0.080**	**1.00**	**70**	**0.40**	**24.5**	**1.20**
FC0520-100K	**10**	**0.040**	**2.65**	**60**	**0.65**	**22.5**	**3.10**
FC0520-120K	12	0.044	2.26	55	0.60	23.5	2.98
FC0520-150K	15	0.060	1.90	45	0.55	27.5	2.97
FC0520-180K	18	0.080	1.57	40	0.50	29.5	2.87
FC0520-220K	22	0.100	1.27	38	0.45	32.5	2.73
FC0520-270K	27	0.150	1.00	36	0.40	36.5	2.63
FC0630-4R7K	4.7	0.005	16.08	85	1.60	12.5	10.2
FC0630-5R6K	5.6	0.005	16.08	80	1.60	14.5	11.0
FC0630-6R8K	6.8	0.008	10.61	75	1.30	15.5	8.68
FC0630-8R2K	8.2	0.009	9.04	67	1.20	16.5	8.35
FC0630-100K	**10**	**0.010**	**9.04**	**64**	**1.20**	**19.5**	**8.80**
FC0630-120K	12	0.018	6.28	57	1.00	20.5	7.43
FC0630-150K	15	0.023	5.08	53	0.90	23.5	7.23
FC0630-180K	18	0.030	4.02	49	0.80	24.5	6.70
FC0630-220K	22	0.045	3.07	44	0.70	27.5	6.24
FC0630-270K	27	0.050	3.07	42	0.70	31.5	6.40
FC0630-330K	33	0.060	2.65	36	0.65	35.5	6.53
FC0630-390K	39	0.080	2.26	34	0.60	40.5	6.23
FC0630-470K	47	0.110	1.90	32	0.55	44.5	6.22
FC0630-560K	56	0.140	1.57	30	0.50	46.5	5.80

DIP INDUCTORS Series

KLS18-PK DIP Inductors Series

Features:

- Open Magnetic circuit construction
- Low cost and high reliability

Applications:

- Notebook, Inkjet printer, Copying machine, Display monitor, Cellular phone, ADSL modem, Gaming machine, Color TV, Video tape recorder, Video camera, Microwave oven, Lighting and Car electronics

RATING:

Temperature range.....-20°C to +100°C

Rated voltage.....250V DC



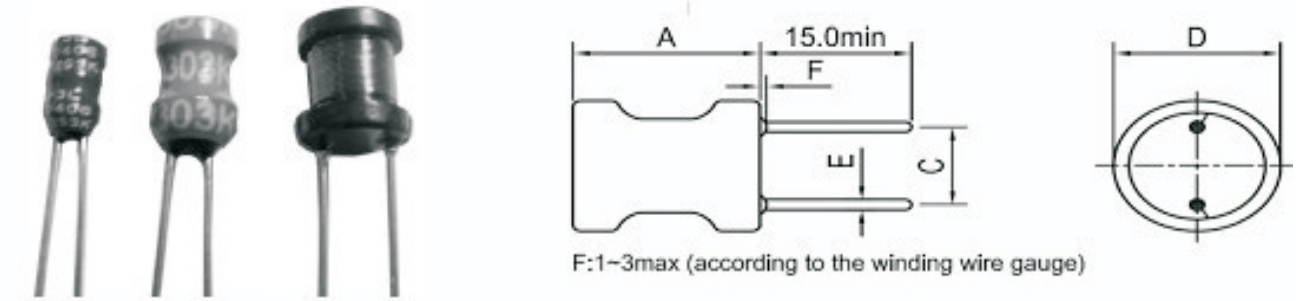

3L P / N	A max	C	D max	E±0.05	3L P / N	A max	C	D max	E±0.05
PK0406	8.0	2.0±0.5	5.5	0.55	PK1010	13.0	5.0±1.0	12.0	0.80
PK0608	11.0	2.5±0.5	7.5	0.65	PK1012	15.0	6.0±1.0	12.0	0.80
PK0707	9.5	5.0±1.0	8.5	0.65	PK1018	21.0	6.0±1.0	12.0	0.80
PK0807	9.5	5.0±1.0	10.0	0.65	PK1213	16.0	7.5±1.0	14.0	0.80
PK0810	13.0	5.0±1.0	10.0	0.65					

ORDER INFORMATION

Product No.: KLS18-PK 0810 -103 K-PVC-B

- Type: KLS18-PK
- Size: 0406,0608,0810.....
- Inductance:103:"103"for 1mH
- Tolerance:"M:±20%, "K":±10% , "J":±5%
- PVC Sleeve or UL tube
- Packing Code : R-Reel B:In Bulk

KLS electronic
www.cnkls.com

DIP INDUCTORS Series

KLS18-PK DIP Inductors Series

PART NO. CODE	At 1 KHZ, (uH)	Q min	Q Test Freq (MHz)	SRF (MHz) MIN	DCR (Ω) MAX	Rated DC Current (mA) MAX
PK0304-1R0M	1	80	7.96	175	0.1	1000
PK0304-1R2M	1.2	80	7.96	150	0.1	1000
PK0304-1R5M	1.5	85	7.96	120	0.1	900
PK0304-1R8M	1.8	80	7.96	102	0.1	800
PK0304-2R2M	2.2	70	7.96	83	0.1	700
PK0304-2R7M	2.7	70	7.96	71	0.2	700
PK0304-3R3M	3.3	70	7.96	59	0.2	650
PK0304-3R9M	3.9	70	7.96	44	0.2	650
PK0304-4R7M	4.7	70	7.96	43	0.2	500
PK0304-5R6M	5.6	70	7.96	39	0.3	450
PK0304-6R8M	6.8	70	7.96	30	0.3	400
PK0304-8R2M	8.2	65	7.96	22	0.3	350
PK0304-100K	10	60	2.52	21	0.4	350
PK0304-120K	12	65	2.52	20	0.5	300
PK0304-150K	15	65	2.52	18	0.6	300
PK0304-180K	18	60	2.52	16	0.6	300
PK0304-220K	22	60	2.52	15	0.7	290
PK0304-270K	27	55	2.52	13	0.8	270
PK0304-330K	33	50	2.52	12	0.9	270
PK0304-390K	39	50	2.52	11	2	260
PK0304-470K	47	45	2.52	10	2	250
PK0304-560K	56	65	2.52	9	3	180
PK0304-680K	68	60	2.52	8	3	170
PK0304-820K	82	60	2.52	8	3	170
PK0304-101K	100	75	0.796	6	4	160
PK0304-121K	120	75	0.796	6	4	150
PK0304-151K	150	75	0.796	5	4	150
PK0304-181K	180	75	0.796	4	5	130
PK0304-221K	220	75	0.796	4	8	100
PK0304-271K	270	80	0.796	4	9	90
PK0304-331K	330	80	0.796	3.5	10	90
PK0304-391K	390	80	0.796	3.5	10	80

DIP INDUCTORS Series

KLS18-PK DIP Inductors Series

PART NO. CODE	At 1 KHZ, (uH)	Q min	Q Test Freq (MHz)	SRF (MHz) MIN	DCR (Ω) MAX	Rated DC Current (mA) MAX
PK0304-471K	470	80	0.796	3	11	80
PK0304-561K	560	80	0.796	3	15	70
PK0304-681K	680	65	0.796	2	23	50
PK0304-821K	820	65	0.796	2	26	50
PK0304-102K	1000	35	0.252	1.5	29	50
PK0304-122K	1200	35	0.252	1.5	33	40
PK0304-152K	1500	35	0.252	1.5	37	40
PK0304-182K	1800	40	0.252	1.5	41	40
PK0304-222K	2200	40	0.252	1.5	46	30
PK0304-272K	2700	45	0.252	1.5	51	30

Pk0406:

PART NO.	At 1 KHZ, (uH)	Q (min)	Q Test Freq (MHz)	SRF (MHz) MIN	DCR (Ω)MAX	Rated DC Current (mA) MAX
PK0406-1R0M-S0	1	130	7.96MHZ	120	0.035	2000
PK0406-1R2M-S0	1.2	100	7.96MHZ	120	0.058	1950
PK0406-1R5M-S0	1.5	100	7.96MHZ	120	0.075	1900
PK0406-1R8M-S0	1.8	100	7.96MHZ	120	0.11	1800
PK0406-2R2M-S0	2.2	100	7.96MHZ	100	0.12	1750
PK0406-2R7M-S0	2.7	100	7.96MHZ	80	0.125	1680
PK0406-3R3K-S0	3.3	100	7.96MHZ	75	0.13	1500
PK0406-3R9K-S0	3.9	100	7.96MHZ	70	0.135	1450
PK0406-4R7K-S0	4.7	100	7.96MHZ	50	0.14	1320
PK0406-5R6K-S0	5.6	100	7.96MHZ	45	0.145	1230
PK0406-6R8K-S0	6.8	100	7.96MHZ	30	0.15	1150
PK0406-8R2K-S0	8.2	100	7.96MHZ	22	0.16	1100
PK0406-100K-S0	10	80	2.52MHZ	20	0.23	1000
PK0406-120K-S0	12	80	2.52MHZ	17	0.24	970
PK0406-150K-S0	15	80	2.52MHZ	16	0.25	920
PK0406-180K-S0	18	80	2.52MHZ	12	0.33	860

DIP INDUCTORS Series

KLS18-PK DIP Inductors Series

PART NO.	At 1 KHZ, (uH)	Q (min)	Q Test Freq (MHz)	SRF (MHz) MIN	DCR (Ω)MAX	Rated DC Current (mA) MAX
PK0406-220K-S0	22	80	2.52MHZ	10	0.45	800
PK0406-270K-S0	27	80	2.52MHZ	10	0.5	710
PK0406-330K-S0	33	80	2.52MHZ	9	0.7	660
PK0406-390K-S0	39	70	2.52MHZ	8	0.74	600
PK0406-470K-S0	47	70	2.52MHZ	8	0.76	550
PK0406-560K-S0	56	50	2.52MHZ	8	0.8	500
PK0406-680K-S0	68	50	2.52MHZ	7	0.9	470
PK0406-820K-S0	82	50	2.52MHZ	6	0.95	430
PK0406-101K-S0	100	45	796KHZ	6	1	400
PK0406-121K-S0	120	45	796KHZ	6	1.1	370
PK0406-151K-S0	150	65	796KHZ	4.2	1.3	350
PK0406-181K-S0	180	65	796KHZ	3.6	1.5	320
PK0406-221K-S0	220	65	796KHZ	2.8	1.8	300
PK0406-271K-S0	270	50	796KHZ	2.4	1.9	275
PK0406-331K-S0	330	50	796KHZ	2.2	2.2	250
PK0406-391K-S0	390	50	796KHZ	2	2.7	220
PK0406-471K-S0	470	50	796KHZ	1.7	3.6	200
PK0406-561K-S0	560	50	796KHZ	1.5	4.2	190
PK0406-681K-S0	680	50	796KHZ	1.3	4.6	170
PK0406-821K-S0	820	50	796KHZ	1.1	5.7	155
PK0406-102K-S0	1000	90	252KHZ	1	7	150
PK0406-122K-S0	1200	90	252KHZ	0.9	8	140
PK0406-152K-S0	1500	80	252KHZ	0.8	13	120
PK0406-182K-S0	1800	80	252KHZ	0.8	15	110
PK0406-222K-S0	2200	80	252KHZ	0.8	17	100
PK0406-272K-S0	2700	80	252KHZ	0.8	19	90
PK0406-332K-S0	3300	70	252KHZ	0.7	26	83
PK0406-392K-S0	3900	70	252KHZ	0.7	30	76
PK0406-472K-S0	4700	65	252KHZ		45	70
PK0406-562K-S0	5600	65	252KHZ		48	62
PK0406-682K-S0	6800	65	252KHZ		56	56

DIP INDUCTORS Series

KLS18-PK DIP Inductors Series

PART NO.	At 1 KHZ, (uH)	Q (min)	Q Test Freq (MHz)	SRF (MHz) MIN	DCR (Ω)MAX	Rated DC Current (mA) MAX
PK0406-822K-S0	8200	65	252KHZ		62	52
PK0406-103K-S0	10000	45	79.6KHZ		72	47
PK0406-123K-S0	12000	45	79.6KHZ		80	40
PK0406-153K-S0	15000	45	79.6KHZ		120	35
PK0406-183K-S0	18000	45	79.6KHZ		135	30
PK0406-223K-S0	22000	45	79.6KHZ		160	24
PK0406-253K-S0	25000	30	79.6KHZ		180	20

Pk0608:

PART NO.	At 1 KHZ, (uH)	Q(min)	Q Test Freq(MHz)	DCR (Ω) MAX	Rated DC Current (mA) MAX
PK0608-122K-S0	1.2	70	252KHZ	3.5	120
PK0608-152K-S0	1.5	70	252KHZ	4.5	100
PK0608-182K-S0	1.8	70	252KHZ	5	100
PK0608-222K-S0	2.2	70	252KHZ	6.2	90
PK0608-272K-S0	2.7	70	252KHZ	7.2	90
PK0608-332K-S0	3.3	70	252KHZ	10.5	60
PK0608-392K-S0	3.9	70	252KHZ	11.7	60
PK0608-472K-S0	4.7	70	252KHZ	13.6	60
PK0608-562K-S0	5.6	70	252KHZ	16.6	50
PK0608-682K-S0	6.8	70	252KHZ	19.6	50
PK0608-822K-S0	8.2	70	252KHZ	25.2	40
PK0608-103K-S0	10	70	79.6KHZ	29.5	40
PK0608-123K-S0	12	70	79.6KHZ	33.8	40
PK0608-153K-S0	15	70	79.6KHZ	45.4	30
PK0608-183K-S0	18	70	79.6KHZ	50.4	30
PK0608-223K-S0	22	70	79.6KHZ	60	30
PK0608-303K-S0	30	70	79.6KHZ	91.5	20
PK0608-333K-S0	33	70	79.6KHZ	98.5	20
PK0608-393K-S0	39	70	79.6KHZ	140	15
PK0608-473K-S0	47	70	79.6KHZ	160	15

DIP INDUCTORS Series

KLS18-PK DIP Inductors Series

PART NO.	At 1 KHZ, (uH)	Q(min)	Q Test Freq(MHz)	DCR (Ω) MAX	Rated DC Current (mA) MAX
PK0608-503K-S0	50	70	79.6KHZ	170	15
PK0608-563K-S0	56	70	79.6KHZ	181	15
PK0608-683K-S0	68	50	79.6KHZ	282	15
PK0608-823K-S0	82	50	79.6KHZ	312	10
PK0608-104K-S0	100	30	25.2KHZ	380	10
PK0608-124K-S0	120	30	25.2KHZ	430	10
PK0608-154K-S0	150	30	25.2KHZ	520	10

Pk0810:

PART NO.	At 1 KHZ, (uH)	Q (min)	Q Test Freq(MHz)	DCR (Ω) MAX	Rated DC Current (mA)
PK0810-102K-S0	1	65	0.252MHZ	6	450
PK0810-122K-S0	1.2	140	0.252MHZ	6	450
PK0810-152K-S0	1.5	130	0.252MHZ	7	400
PK0810-162K-S0	1.6	150	0.252MHZ	10	400
PK0810-182K-S0	1.8	150	0.252MHZ	10	400
PK0810-222K-S0	2.2	150	0.252MHZ	12	360
PK0810-272K-S0	2.7	140	0.252MHZ	14	360
PK0810-302K-S0	3	140	0.252MHZ	15	280
PK0810-332K-S0	3.3	140	0.252MHZ	16	280
PK0810-392K-S0	3.9	130	0.252MHZ	18	280
PK0810-472K-S0	4.7	120	0.252MHZ	20	260
PK0810-562K-S0	5.6	120	0.252MHZ	22	260
PK0810-682K-S0	6.8	110	0.252MHZ	29	260
PK0810-752K-S0	7.5	110	0.252MHZ	30	240
PK0810-822K-S0	8.2	100	0.252MHZ	30	240

DIP INDUCTORS Series

KLS18-PK DIP Inductors Series

Pk0812:

PART NO.	At 1 KHZ, (uH)	Q (min)	Q Test Freq (MHz)	DCR (Ω) MAX	SRF (MHz) MIN	Rated DC Current (mA) MAX
PK1012-103K-S0	10	140	79.6KHZ	12	0.35	280
PK1012-123K-S0	12	140	79.6KHZ	13	0.31	280
PK1012-153K-S0	15	140	79.6KHZ	18	0.28	280
PK1012-183K-S0	18	130	79.6KHZ	25	0.26	280
PK1012-223K-S0	22	130	79.6KHZ	30	0.22	240
PK1012-273K-S0	27	130	79.6KHZ	35	0.2	240
PK1012-333K-S0	33	110	79.6KHZ	40	0.19	200
PK1012-393K-S0	39	110	79.6KHZ	50	0.17	140
PK1012-473K-S0	47	110	79.6KHZ	50	0.15	140
PK1012-563K-S0	56	100	79.6KHZ	65	0.13	140
PK1012-683K-S0	68	80	79.6KHZ	70	0.12	120
PK1012-823K-S0	82	65	79.6KHZ	85	0.1	120
PK1012-104K-S0	100	60	79.6KHZ	100	0.1	120

DIP INDUCTORS Series

KLS18-PKB DIP Inductors Series

Characteristics :
Inductance range : 1.0uH to 36000uH .
Current rating: Based on temperature rise not exceeding 20oC.
Operating temperature : -20oC to 100oC.
Terminal strength : 0.5 Kg min .
Test equipment :
L & Q tested by HP 4342A Q meter .
DCR tested by Milliohm meter .
SRF tested by HM 9461 L-SRF meter .



TYPE	A max	B±1.0	C±0.5	D max	E±0.05
PKB0804	8.9	4.0	5.0	10.0	0.7
PKB0865	11.5	4.0	5.0	10.0	0.7
PKB0809	14.0	4.0	5.0	10.0	0.7

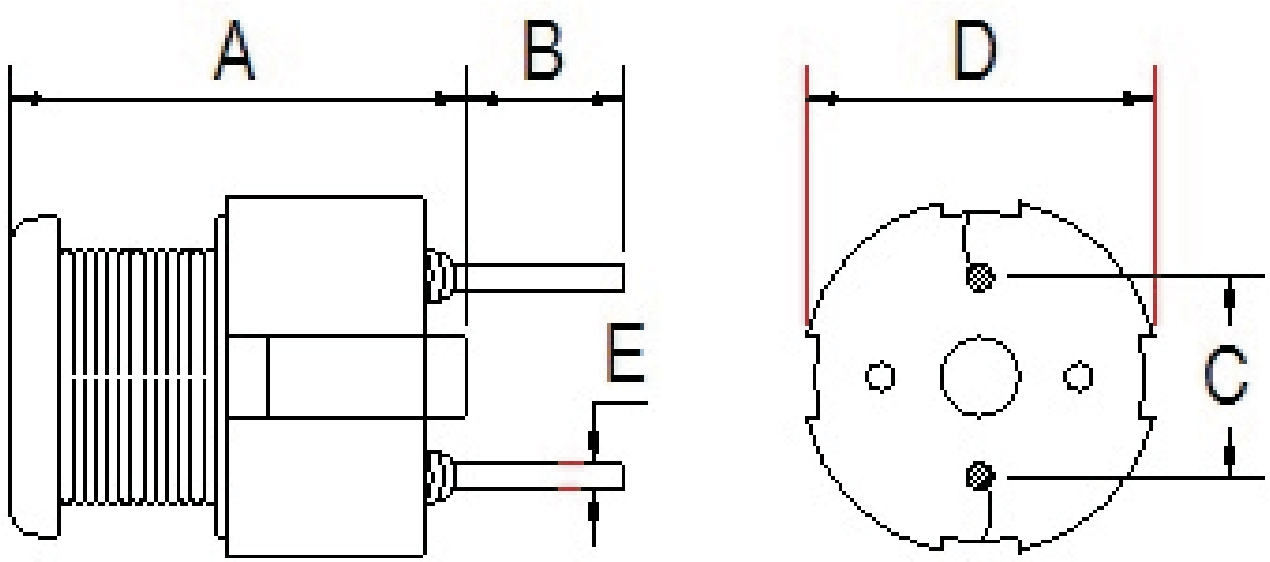

ORDER INFORMATION

Product No.: KLS18-PKB 0809 -331 K-UL-B

Type: KLS18-PKB
Base: B
Core Size:0804,0865,0809
Inductance : 331-330uH
Tolerance) :"M:±20%, "K":±10% , "J":±5%
PVC Sleeve or UL tube
Packing Code : R-Reel B:In Bulk

DIP INDUCTORS Series

PKB0804:

PART NO.	L (uH)	Q min	Q Test Freq(MHz)	SRF (MHz) MIN	DCR (Ω) MAX	Rated DC Current (mA) MAX
PKB0804-101K-S0	100	130	@0.796MHZ	5.5	3	200
PKB0804-121K-S0	120	60	@0.796MHZ	5.5	3	200
PKB0804-151K-S0	150	60	@0.796MHZ	5	3	200
PKB0804-181K-S0	180	60	@0.796MHZ	4.7	3	200
PKB0804-221K-S0	220	60	@0.796MHZ	4.5	3	150
PKB0804-271K-S0	270	60	@0.796MHZ	4.1	3	150
PKB0804-331K-S0	330	60	@0.796MHZ	3.8	4	150
PKB0804-391K-S0	390	60	@0.796MHZ	3.5	4	100
PKB0804-471K-S0	470	60	@0.796MHZ	3.2	5	100
PKB0804-561K-S0	560	60	@0.796MHZ	2.9	6	100
PKB0804-681K-S0	680	60	@0.796MHZ	2.7	6	100
PKB0804-821K-S0	820	60	@0.796MHZ	2.3	7	50
PKB0804-102K-S0	1000	80	@0.252MHZ	2.1	9	50
PKB0804-122K-S0	1200	80	@0.252MHZ	1.9	9	50
PKB0804-152K-S0	1500	80	@0.252MHZ	1.8	11	50
PKB0804-182K-S0	1800	80	@0.252MHZ	1.6	12	50
PKB0804-222K-S0	2200	80	@0.252MHZ	1.5	14	50
PKB0804-272K-S0	2700	80	@0.252MHZ	1.4	15	50
PKB0804-332K-S0	3300	80	@0.252MHZ	0.9	25	40
PKB0804-392K-S0	3900	80	@0.252MHZ	0.9	30	40
PKB0804-472K-S0	4700	80	@0.252MHZ	0.8	32	40
PKB0804-562K-S0	5600	80	@0.252MHZ	0.7	36	30
PKB0804-682K-S0	6800	80	@0.252MHZ	0.7	40	30
PKB0804-822K-S0	8200	80	@0.252MHZ	0.6	45	30
PKB0804-103K-S0	10000	60	@0.0796MHZ	0.6	55	20
PKB0804-123K-S0	12000	60	@0.0796MHZ	0.5	65	20
PKB0804-153K-S0	15000	60	@0.0796MHZ	0.5	80	20
PKB0804-183K-S0	18000	40	@0.0796MHZ	0.4	95	15

DIP INDUCTORS Series

PKB0865:

PART NO.	L (uH)	Q min	Q Test Freq(MHz)	DCR (Ω) MAX	Rated DC Current (mA) MAX
PKB0865-1R0M-S0	1	20	25.2	0.021	8.6
PKB0865-1R5M-S0	1.5	20	7.96	0.023	7.6
PKB0865-2R2M-S0	2.2	20	7.96	0.026	6.3
PKB0865-3R3M-S0	3.3	20	7.96	0.03	5.4
PKB0865-4R7M-S0	4.7	20	7.96	0.034	4.6
PKB0865-6R8M-S0	6.8	20	7.96	0.037	4.1
PKB0865-100K-S0	10	50	2.52	0.044	3.4
PKB0865-120K-S0	12	50	2.52	0.049	3.1
PKB0865-150K-S0	15	50	2.52	0.054	2.9
PKB0865-180K-S0	18	40	2.52	0.058	2.7
PKB0865-220K-S0	22	40	2.52	0.065	2.4
PKB0865-270K-S0	27	40	2.52	0.072	2.2
PKB0865-330K-S0	33	30	2.52	0.08	2.1
PKB0865-390K-S0	39	30	2.52	0.091	1.9
PKB0865-470K-S0	47	30	2.52	0.101	1.8
PKB0865-560K-S0	56	30	2.52	0.145	1.5
PKB0865-680K-S0	68	30	2.52	0.161	1.4
PKB0865-820K-S0	82	30	2.52	0.174	1.3
PKB0865-101K-S0	100	20	0.796	0.221	1.1
PKB0865-121K-S0	120	20	0.796	0.254	1
PKB0865-151K-S0	150	20	0.796	0.294	0.9
PKB0865-181K-S0	180	20	0.796	0.451	0.8
PKB0865-221K-S0	220	20	0.796	0.509	0.7
PKB0865-271K-S0	270	20	0.796	0.579	0.7
PKB0865-331K-S0	330	20	0.796	0.657	0.6
PKB0865-391K-S0	390	20	0.796	0.742	0.6
PKB0865-471K-S0	470	20	0.796	0.836	0.5
PKB0865-561K-S0	560	15	0.796	0.98	0.5

DIP INDUCTORS Series

PKB0809:

PART NO.	L (uH)	Q min	Q Test Freq(MHz)	DCR (Ω) MAX	Rated DC Current (mA) MAX
PKB0809-101K-S0	100	80	0.796	0.52	800
PKB0809-121K-S0	120	80	0.796	0.52	740
PKB0809-151K-S0	150	80	0.796	0.62	660
PKB0809-181K-S0	180	80	0.796	0.82	600
PKB0809-221K-S0	220	80	0.796	1	550
PKB0809-271K-S0	270	80	0.796	1.2	490
PKB0809-331K-S0	330	80	0.796	1.5	440
PKB0809-391K-S0	390	80	0.796	1.8	390
PKB0809-471K-S0	470	80	0.796	2	350
PKB0809-561K-S0	560	80	0.796	3	320
PKB0809-681K-S0	680	80	0.796	3	290
PKB0809-821K-S0	820	80	0.796	3.3	260
PKB0809-102K-S0	1000	90	0.252	3.3	220
PKB0809-122K-S0	1200	90	0.252	3.6	200
PKB0809-152K-S0	1500	90	0.252	3.9	180
PKB0809-182K-S0	1800	90	0.252	5.6	160
PKB0809-222K-S0	2200	90	0.252	6.2	140
PKB0809-272K-S0	2700	90	0.252	7.5	120
PKB0809-332K-S0	3300	90	0.252	8.2	110
PKB0809-392K-S0	3900	90	0.252	9.1	100
PKB0809-472K-S0	4700	90	0.252	11	100
PKB0809-562K-S0	5600	90	0.252	15	90
PKB0809-682K-S0	6800	90	0.252	20	80
PKB0809-822K-S0	8200	90	0.252	22	70
PKB0809-103K-S0	10000	100	0.0796	25	65
PKB0809-123K-S0	12000	100	0.0796	27	60
PKB0809-153K-S0	15000	100	0.0796	33	56
PKB0809-183K-S0	18000	100	0.0796	36	52
PKB0809-223K-S0	22000	100	0.0796	42	48
PKB0809-273K-S0	27000	100	0.0796	56	45
PKB0809-333K-S0	33000	100	0.0796	65	42
PKB0809-363K-S0	36000	100	0.0796	70	40

DIP INDUCTORS Series

KLS18-TC/TB DIP Inductors Series

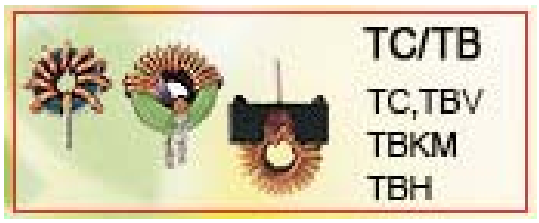

Features :

- Low cost , High current.
- ILowest EMI

Applications:

- Copying Machine, Display Monitor, ADSL Modem, Gaming Machine, Color TV, ideo Camera, Air Conditioner, Refrigerator
- Power supply applications

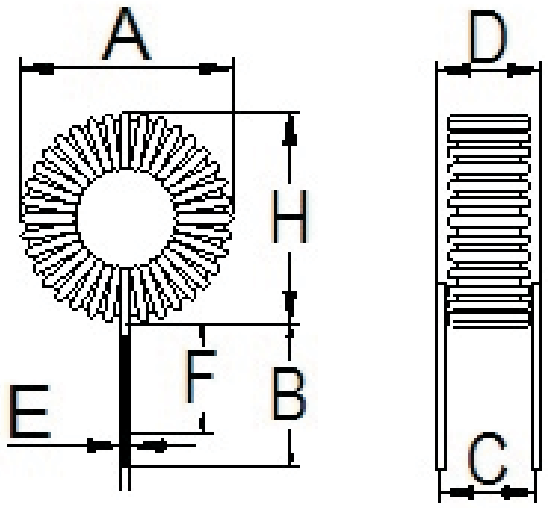

TYPE	D (Max)	H (Max)	A (Max)	B	Rated DC Current MAX	(uH)
2026	4.5mm	8.0mm	8.0mm	15.0±3.0	0.3-0.5A	5uH-27uH
3026	7.0mm	12.0mm	12.0mm	15.0±3.0	0.5-2.0A	10uH-140uH
5026	11.5mm	18.0mm	18.0mm	15.0±3.0	0.2-3.0A	1.0uH-680uH
6826	11.5mm	24.0mm	24.0mm	15.0±3.0	0.2-4.0A	5uH-500uH
8026	13.5mm	27.0mm	27.0mm	15.0±3.0	0.2-5.0A	10uH-960uH
10626	19.5mm	36.0mm	36.0mm	15.0±3.0	0.5-10.0A	30uH-1000uH
13026	82.0mm	42.5mm	42.5mm	15.0±3.0	2.0-10.0A	30uH-1200uH

ORDER INFORMATION

Product No.: KLS18-TB5026- 101M - F-UL XX

- Type: KLS18-TB5026
- 101-100UH
- Tolerance) :"M:±20%, "K":±10% , "J":±5%
- Shape:"F.H.U" shape
- UL TUBE
- Wire Diameter And Special Requir

DIP INDUCTORS Series

PART NO.	(uH) @ 1 KHZ	Rated Current AC (A) MAX	DCR (OHM)MAX	D Size (mm)MAX	H Size (mm)MAX	(G/PCS)
TB-5R0M-2026	5	0.5	0.007	7.5	4.5	0.4
TB-9R0M-2026	9	0.3	0.011	8	4.5	0.2
TB-150M-2026	15	0.5	0.07	7.5	4.5	0.4
TB-200M-2026	20	0.2	0.198	7.5	4	0.2
TB-270M-2026	27	0.3	0.031	8	4.5	0.2
TB-100M-3026	10	2	0.017	12	7	1.6
TB-120M-3026	12	1	0.04	10.5	6	1.2
TB-320M-3026	32	1	0.065	12	7	1.4
TB-370M-3026	37	0.5	0.134	10	5.5	1
TB-141M-3026	140	0.5	0.265	10	6	1.2
TB-8R2M-3726	8.2	2	0.017	14.5	7	2
TB-220M-3726	22	2	0.03	14.5	7.5	2.4
TB-240M-3726	24	1	0.055	13.5	6	1.6
TB-560M-3726	56	0.5	0.181	12.5	5.5	1.4
TB-680M-3726	68	1	0.095	13.5	6.5	2
TB-241M-3726	240	0.5	0.36	13	6.5	1.6
TB-150M-4426	15	2	0.023	15.5	7.5	2.8
TB-430M-4426	43	1	0.074	14.5	7	2.6
TB-680M-4426	68	2	0.056	15.5	9	3.8
TB-111M-4426	110	0.5	0.25	14	6.5	2.4
TB-141M-4426	140	1	0.14	15	7.5	3.2
TB-361M-4426	360	0.5	0.46	14.5	7.5	2.8
TB-200M-5026	20	3	0.021	17.5	9	4.4
TB-300M-5026	30	2	0.035	17	8.5	4
TB-600M-5026	60	3	0.038	18	10	5.8
TB-680M-5026	68	1	0.101	16	7.5	3.6
TB-101M-5026	100	2	0.081	17	9.5	5.2
TB-221M-5026	220	1	0.19	16.5	8	4.4

DIP INDUCTORS Series

PART NO.	(uH) @ 1 KHZ	Rated Current AC (A) MAX	DCR (OHM)MAX	D Size (mm)MAX	H Size (mm)MAX	(G/PCS)
TB-220M-6026	22	5	0.014	21.5	11.5	8
TB-290M-6026	29	4	0.02	21	11	7.8
TB-350M-6026	35	3	0.026	20.5	10.5	7.6
TB-580M-6026	58	2	0.061	20	10	7.2
TB-900M-6026	90	3	0.044	20.5	12.5	9.2
TB-111M-6026	110	2	0.069	19.5	10	8
TB-131M-6026	130	1	0.146	19	9	6.4
TB-471M-6026	470	1	0.286	21	11	7.6
TB-250M-6026	25	5	0.016	24	10.5	9.2
TB-320M-6826	32	4	0.021	23.5	10	9
TB-430M-6826	43	3	0.03	23	9.5	8.8
TB-650M-6826	65	2	0.055	22	9	8.2
TB-111M-6826	110	4	0.042	23.5	11	11.4
TB-131M-6826	130	3	0.055	23	10.5	10.4
TB-151M-6826	150	1	0.159	21.5	7.5	7.6
TB-231M-6826	230	2	0.108	22.5	9.5	9.8
TB-500M-8026	50	5	0.022	26.5	12	14.2
TB-600M-8026	60	4	0.03	26.5	11.5	13.7
TB-750M-8026	75	3	0.039	25.5	11	13
TB-820M-8026	82	3	0.042	24.5	10.5	13
TB-101M-8026	100	5	0.033	26.5	12.5	16.8
TB-151M-8026	150	5	0.042	27	13.5	18
TB-221M-8026	220	4	0.059	26.5	13	17.9
TB-271M-8026	270	3	0.081	26	12	16.6
TB-321M-8026	320	2	0.131	25	10.5	14
TB-431M-8026	430	2	0.15	25	11	15
TB-961M-8026	360	1	0.438	25	11	13

DIP INDUCTORS Series

PART NO.	(uH) @ 1 KHZ	Rated Current AC (A) MAX	DCR (OHM)MAX	D Size (mm)MAX	H Size (mm)MAX	(G/PCS)
TB-900M-9026	90	5	0.034	29.5	15.5	23.6
TB-141M-9026	140	3	0.064	28	14.5	22
TB-201M-9026	200	2	0.114	28	14	20.8
TB-321M-9026	320	5	0.068	29.5	1	29.6
TB-451M-9026	450	2	0.174	28	14	23
TB-471M-9026	470	1	0.354	26.5	13	19.5
TB-471M-9026	470	3	0.188	28.5	15.5	27
TB-182M-9026	1800	1	0.68	27.5	14	22.4
TB-820M-9426	82	5	0.033	31	15.5	22.4
TB-101M-9426	100	4	0.042	29.5	13.5	21.9
TB-131M-9426	130	3	0.061	29	13	21.6
TB-221M-9426	220	2	0.121	28.5	12	20.6
TB-301M-9426	300	5	0.064	30	15.5	28.8
TB-391M-9426	390	4	0.088	29.5	15	27.2
TB-471M-9426	470	1	0.342	27.5	11.5	19
TB-501M-9426	500	3	0.124	29	14	26
TB-781M-9426	780	2	0.225	28.5	13.5	24.1
TB-132M-9426	1300	1	0.585	28.5	12.5	21.2
TB-300M-10626	30	10	0.009	36	19.5	42
TB-350M-10626	35	10	0.01	36	19.5	43
TB-560M-10626	56	7	0.02	34	18	40
TB-680M-10626	68	7	0.021	34	18	40
TB-820M-10626	82	7	0.023	34	18	41
TB-101M-10626	100	5	0.036	33.5	17	39
TB-151M-10626	150	4	0.053	32.5	16.5	38.4
TB-201M-10626	200	3	0.078	32	16	37.8
TB-301M-10626	300	2	0.142	31.5	15.5	37.8
TB-851M-10626	850	2	0.211	32.5	16.5	41.8
TB-750M-13026	75	10	0.014	42	19.5	64
TB-131M-13026	130	7	0.031	41	18	58
TB-201M-13026	200	5	0.056	39	17	55.6
TB-251M-13026	250	10	0.027	42.5	21.5	82
TB-471M-13026	470	7	0.064	40.5	19.5	72
TB-681M-13026	680	5	0.105	39	18.5	65.2

KLS electronic
www.cnkls.com

XVIII

DIP INDUCTORS Series

KLS18-FS DIP Inductors Series

Features :
- Vertical structure,small,lightweight design.
- No inductive interference

Applications :
- Video cameras
- Portable VCRs
- Audio equipments





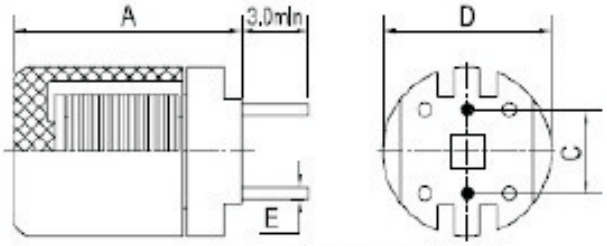

FSB1014 TYPE

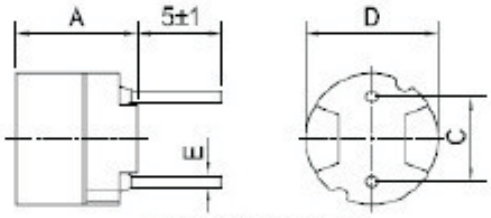

FS0606 / 0807 TYPE

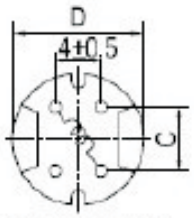

FS4W1008 / 1010

3L P/N	A max	D max	C ±0.5	E typ
FS0606	6.5	6.5	4.0	0.55
FS0807	7.5	8.3	5.0	0.65
FS4W1008	8.5	10.5	5.0	0.65
FS4W1010	10.5	10.5	5.0	0.65

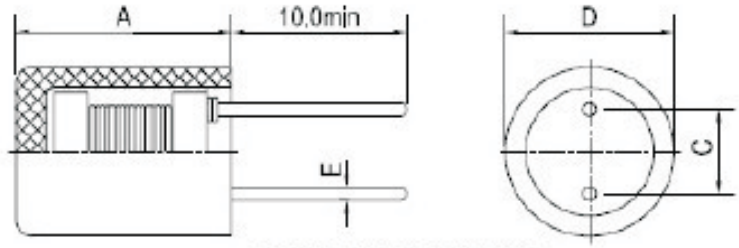

FS1012 / 1215 / 1618 TYPE

3L P/N	A max	D max	C	E typ
FS1012	13.5	11.0	5.0±1.0	0.80
FS1215	17.0	13.4	5.0±1.0	0.80
FS1618	19.2	17.0	7.5±1.0	0.80
FSB1014	14.0	11.0	5.0±0.5	0.70

ORDER INFORMATION

Product No.: KLS18 - FS1012 - 331 K - B

- **Type: KLS18-TB5026**
- **Size:0606,0807,1012.....**
- **Inductance : 331-330uH**
- **Tolerance) :"M:±20%, "K":±10% , "J":±5%**
- **Packing Code : R-Reel B:In Bulk**

DIP INDUCTORS Series

Part NO.	L uH	L Freq	IDC(mA) Max				DCR(Ω) Max			
			606	807	1215	1618	606	807	1215	1618
KLS18-FS	22	2.52MHz	960	1600	3300	4900	0.13	0.08	0.021	0.028
KLS18-FS	27	2.52MHz	870	1400	3000	4300	0.18	0.1	0.023	0.032
KLS18-FS	33	2.52MHz	780	1300	2700	3900	0.21	0.14	0.024	0.033
KLS18-FS	39	2.52MHz	720	1200	2500	3700	0.26	0.15	0.027	0.036
KLS18-FS	47	2.52MHz	660	1100	2300	3400	0.29	0.17	0.032	0.038
KLS18-FS	56	2.52MHz	600	990	2100	3100	0.33	0.19	0.034	0.042
KLS18-FS	68	2.52MHz	550	890	1900	2900	0.36	0.21	0.06	0.046
KLS18-FS	82	2.52MHz	500	810	1700	2800	0.39	0.27	0.07	0.049
KLS18-FS	100	1KHz	450	740	1500	2500	0.54	0.32	0.09	0.053
KLS18-FS	120	1KHz	410	670	1200	2300	0.62	0.36	0.1	0.062
KLS18-FS	150	1KHz	370	600	1000	2000	0.72	0.51	0.11	0.077
KLS18-FS	180	1KHz	340	550	900	1800	0.88	0.57	0.12	0.1
KLS18-FS	220	1KHz	300	500	820	1600	0.99	0.76	0.14	0.14
KLS18-FS	270	1KHz	270	450	740	1400	1.52	0.86	0.16	0.2
KLS18-FS	330	1KHz	250	410	680	1300	1.69	0.97	0.17	0.27
KLS18-FS	390	1KHz	230	370	620	1200	1.85	1.28	0.32	0.41
KLS18-FS	470	1KHz	210	340	560	1100	2.85	1.44	0.35	0.46
KLS18-FS	560	1KHz	190	310	520	1000	3.21	1.61	0.39	0.51
KLS18-FS	680	1KHz	170	280	460	900	3.6	2.07	0.44	0.56
KLS18-FS	820	1KHz	160	260	420	830	4.87	2.33	0.48	0.63
KLS18-FS	1000	1KHz	140	230	380	750	5.65	2.72	0.53	0.69
KLS18-FS	1200	1KHz		210	350			3.98	0.66	
KLS18-FS	1500	1KHz		190	310			4.5	0.86	
KLS18-FS	1800	1KHz		170	280			6.81	0.95	
KLS18-FS	2200	1KHz		160	250			7.56	1.07	
KLS18-FS	2700	1KHz		140				8.54		
KLS18-FS	3300	1KHz		130				9.74		
KLS18-FS	3900	1KHz		120				12.9		
KLS18-FS	4700	1KHz		110				14.7		
KLS18-FS	5600	1KHz		99				20.4		
KLS18-FS	6800	1KHz		89				23		
KLS18-FS	8200	1KHz		81				30.6		
KLS18-FS	10000	1KHz		74				35		

DIP INDUCTORS Series

Part NO.	L(mH)@1KHz	Q Min	Q Test Freq.	DCR (OHM) Max	IDC (mA) Max
FS1012-122K	1.2	50	252KHz	1.2	200
FS1012-152K	1.5	50	252KHz	1.5	200
FS1012-182K	1.8	50	252KHz	1.6	200
FS1012-222K	2.2	50	252KHz	1.8	200
FS1012-272K	2.7	40	252KHz	1.9	200
FS1012-332K	3.3	40	252KHz	2.3	200
FS1012-392K	3.9	40	252KHz	2.5	200
FS1012-472K	4.7	40	252KHz	3.7	140
FS1012-502K	5	40	252KHz	3.8	140
FS1012-562K	5.6	40	252KHz	4	140
FS1012-682K	6.8	40	252KHz	4.2	140
FS1012-822K	8.2	40	252KHz	5.3	140
FS1012-103K	10	100	79.6KHz	7.3	100
FS1012-123K	12	100	79.6KHz	8.3	100
FS1012-153K	15	100	79.6KHz	11	90
FS1012-183K	18	100	79.6KHz	13.6	75
FS1012-223K	22	100	79.6KHz	15.4	75
FS1012-273K	27	100	79.6KHz	17.9	75
FS1012-333K	33	100	79.6KHz	23.3	60
FS1012-393K	39	100	79.6KHz	25.9	60
FS1012-473K	47	80	79.6KHz	30.4	60
FS1012-503K	50	80	79.6KHz	37.8	50
FS1012-563K	56	80	79.6KHz	39.1	50
FS1012-683K	68	50	79.6KHz	40	50
FS1012-823K	82	50	79.6KHz	47	40
FS1012-104K	100	120	25.2KHz	50	40
FS1012-124K	120	100	25.2KHz	91	30
FS1012-154K	150	90	25.2KHz	140	20
FS1012-184K	180	90	25.2KHz	164	20
FS1012-224K	220	90	25.2KHz	182	20
FS1012-274K	270	90	25.2KHz	200	20
FS1012-334K	330	80	25.2KHz	275	15
FS1012-394K	390	80	25.2KHz	300	15
FS1012-474K	470	80	25.2KHz	345	15
FS1012-564K	560	60	25.2KHz	520	8.4
FS1012-684K	680	60	25.2KHz	590	8.4
FS1012-824K	820	50	25.2KHz	675	8.4
FS1012-105K	1000	50	25.2KHz	770	8.4
FS1012-125K	1200	50	25.2KHz	845	8.4

KLS electronic
www.cnkls.com

XVIII

DIP INDUCTORS Series

KLS18-TCT DIP Inductors Series

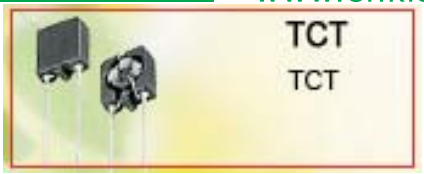

Shape and size : (Dimensions are in mm)



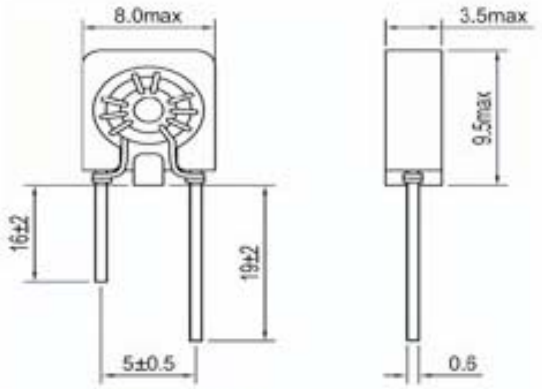

Features :

- Ideal for EMI protection.
- Highly accurate dimensions and taped for automatic inserting .

Characteristics :

- Rated DC Current: The current when temperature of coil Increases up to Max. △T=20℃. (Ta=20℃)

Test equipments and test setup :

L : CH100 LCR meter or equal equipment.
Impedance : HP 4191A RF impedance analyzer.

Ordering information :

TCT - 8R2UH - 45153 - T
(1) (2) (3) (4)

(1) Type.
(2) Inductance: "**8R2UH**" for 8.2 uH.
(3) Style: Core **OD**=4.5 mm; **ID**=3.0mm ; **HT**=1.5 mm
(4) Packing: "**T**": Tape (2000 pcs), No code: Bulk.

Applications :

- VCD, DVD and TV circuits .
- Microcomputer and peripheral devices .

Part No.	L @1kHz (uH)	DCR (mOhm) Max.	Rated Current (mA)
TCT-4R7UH-45153	4.7±50%	20	200
TCT-8R2UH-45153	8.2±50%	25	200
TCT-10UH-45153	**10±35%**	**25**	**500**
TCT-22UH-45153	22±35%	30	500
TCT-33UH-45153	33±35%	35	500
TCT-39UH-45153	39±35%	40	500
TCT-47UH-45153	47±35%	45	500
TCT-56UH-45153	56±35%	50	500
TCT-60UH-45153	60±35%	58	500
TCT-82UH-45153	82±35%	62	500
TCT-100UH-45153	**100±35%**	**95**	**500**
TCT-120UH-45153	120±35%	100	500

- Operating temperature : -20 ℃ to 80 ℃.

Impedance to Frequency curve

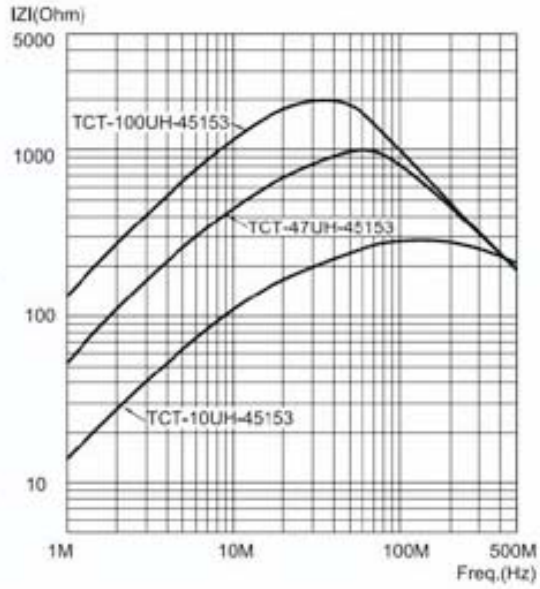

KLS

6-Acoustic Components & Accessories -Акустика компоненты



6-1 Electromagnetic Buzzer
6-2 Piezoelectric/ceramic Buzzer
6-3 SMD buzzer
3-4 Piezo Elements
6-5 Speakers
6-6 Receiver & Microphones
6-7 Tweeter driver
6-8 Hole & Handle & Horn & other acce
6-9 Decoder Module
6-10 Mechanical Buzzer

More . . .

Magnetic Transducer Buzzer Series

KLS3-MT-09*04S Φ9*4mm Magnetic Transducer Buzzer Series

III

SPECIFICATIONS

Rated Voltage:	1.5V
Operating Voltage:	1-3V
Max.Rated Current:	80mA
Min.S.P.L. (@ 10cm):	85dB
Coil Resistance:	5.5 ± 1Ω
Resonant Frequency:	2730Hz
Operating Temp:	-20 ~ +70°C
Weight:	0.7g



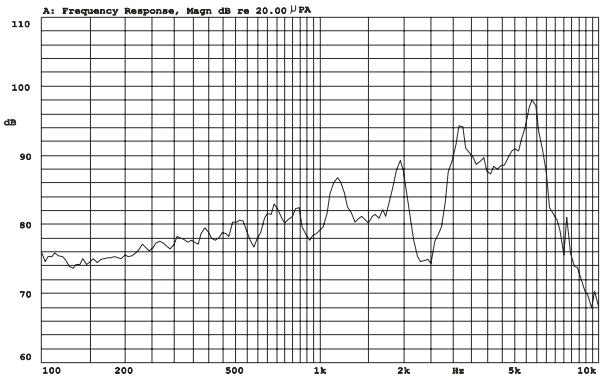

Dimensions (Unit:mm)

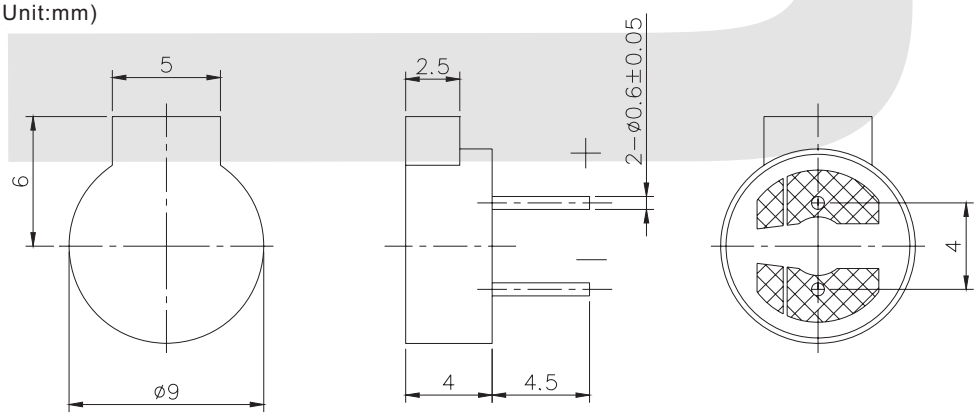

Order Code	Rated Voltage	Max.Rated Current	Coil Resistance	Min.S.P.L. (@10cm)	Operating Voltage
KLS3-MT-09*04-A	1.5V	15mA	27±3Ω	80dB	1...2V
KLS3-MT-09*04-B	5V	40mA	50±5Ω	85dB	4...8V
KLS3-MT-09*04-C	12V	40mA	115±12Ω	85dB	8...16V

ORDER INFORMATION

Product NO.: KLS3- MT - 09*04 - A

- KLS3- : Part Number
- MT : Magnetic Transducer Buzzer Series
- 09*04 : Size specifications
- A : Order Code

Magnetic Transducer Buzzer Series

KLS3-MT-09*5. 5　Φ9*5.5mm Magnetic Transducer Buzzer Series

III

SPECIFICATIONS

Item No.	MT-09*5.5-A	MT-09*5.5-B
Rated Voltage	1. 5V	3V
Operating Voltage	1-2V	2-6V
Max.Rated Current	80mA	80mA
Min.S.P.L. (@ 10cm)	80dB	82dB
Coil Resistance(Ω)	5.5±1Ω	5.5±1Ω
Resonant Frequency	3100Hz	2731Hz
Operating Temp	-20 ~ +70 ° C	
Weight	1g	

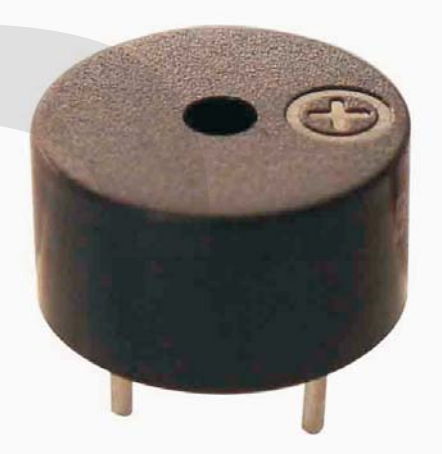

Dimensions (Unit:mm)

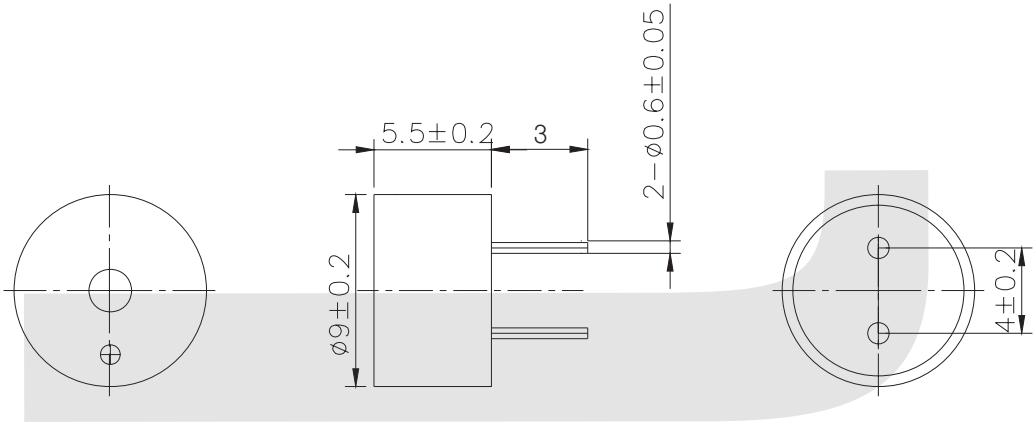

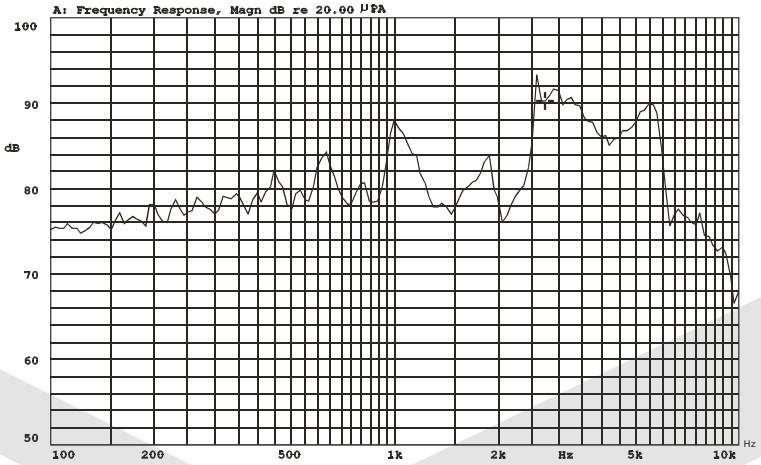

ORDER INFORMATION

Product NO.: KLS3- MT - 09*5.5 - A

Part Number
Magnetic Transducer Buzzer Series
Size specifications
Rated Voltage: A=1.5V　B=3.0V

Magnetic Transducer Buzzer Series

KLS3-MT-9. 5*07　Φ9.5*7mm Magnetic Transducer Buzzer Series

SPECIFICATIONS

Item No.	MT-9.5*07-A	MT-9.5*07-B
Rated Voltage	1. 5V	3V
Operating Voltage	1-2V	2-6V
Max.Rated Current	80mA	80mA
Min.S.P.L. (@ 10cm)	80dB	82dB
Coil Resistance(Ω)	5.5±1Ω	5.5±1Ω
Resonant Frequency	3100Hz	2731Hz
Operating Temp	-20 ~ +70 ° C	
Weight	1g	

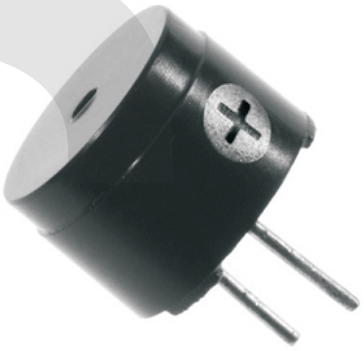

Dimensions (Unit:mm)

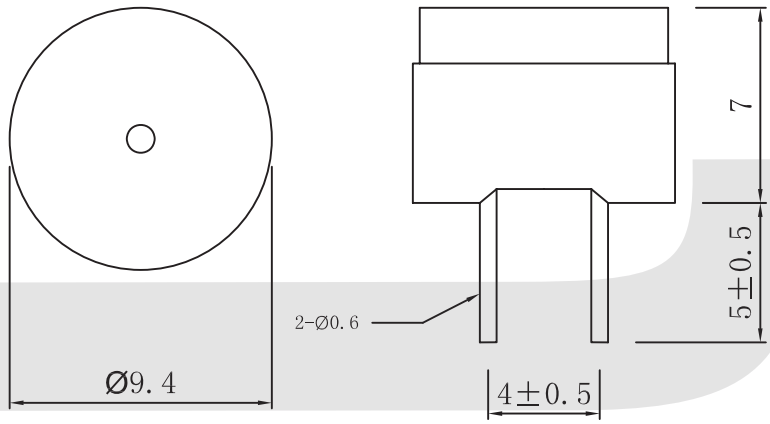

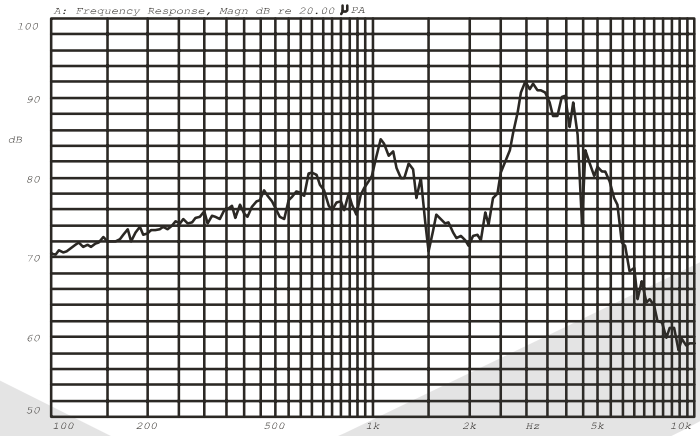

ORDER INFORMATION

Product NO.: KLS3- MT - 9.5*07 - A

- KLS3- : Part Number
- MT : Magnetic Transducer Buzzer Series
- 9.5*07 : Size specifications
- A : Rated Voltage: A=1.5V B=3.0V

Magnetic Transducer Buzzer Series

KLS3-MT-9. 6*05 Φ9.6*5mm Magnetic Transducer Buzzer Series

SPECIFICATIONS

Rated Voltage:	1.5V
Operating Voltage:	1-2V
Max.Rated Current:	80mA
Min.S.P.L. (@ 10cm):	85dB
Coil Resistance:	5.5 ± 1Ω
Resonant Frequency:	2731Hz
Operating Temp:	-20 ~ +70°C
Weight:	1g



Dimensions (Unit:mm)

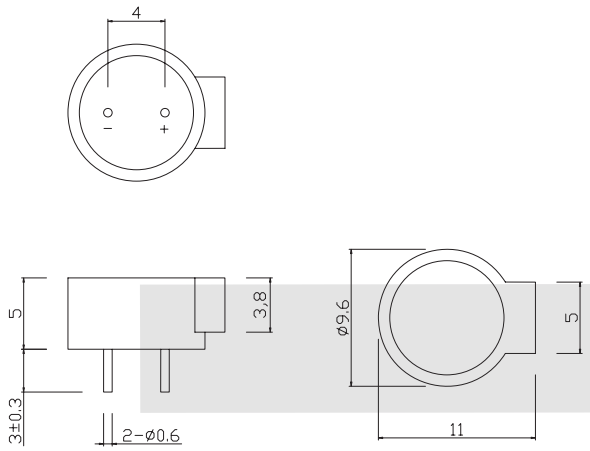

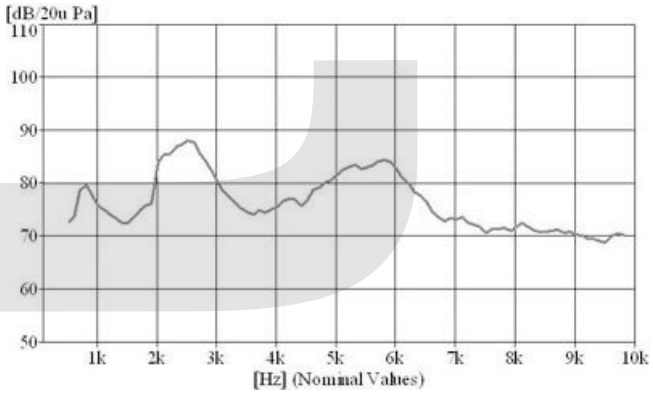

Order Code	Rated Voltage	Max.Rated Current	Coil Resistance	Min.S.P.L. (@10cm)	Operating Voltage
KLS3-MT-9.6*05-A	1.5V	80mA	5.5±1Ω	80dB	1...2V
KLS3-MT-9.6*05-B	5V	100mA	40±7.5Ω	85dB	4...8V

ORDER INFORMATION

Product NO.: KLS3- MT - 9.6*05 - A

- KLS3-: Part Number
- MT: Magnetic Transducer Buzzer Series
- 9.6*05: Size specifications
- A: Order Code

Magnetic Transducer Buzzer Series

KLS3-MT-12*04 Φ12*4mm Magnetic Transducer Buzzer Series

III

SPECIFICATIONS

Item No.	MT-12*04
Rated Voltage	1. 5V
Operating Voltage	1-2V
Max.Rated Current	30mA
Min.S.P.L. (@ 10cm)	70dB
Coil Resistance(Ω)	16±4Ω
Resonant Frequency	2400Hz
Operating Temp	-20 ~ +70 ° C
Weight	2g

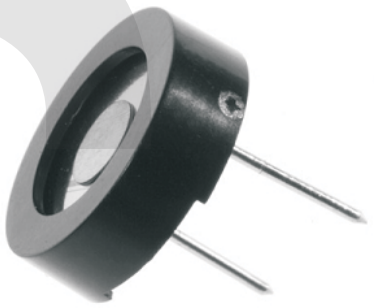

Dimensions (Unit:mm)

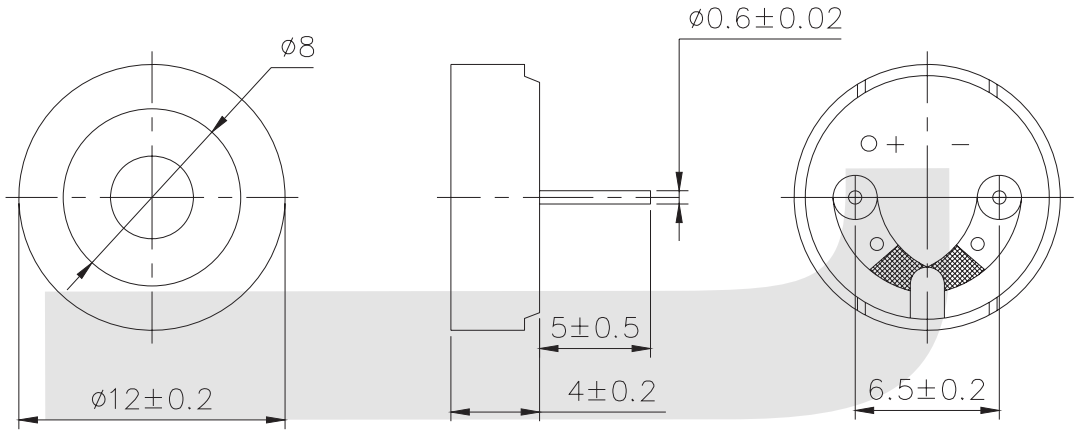

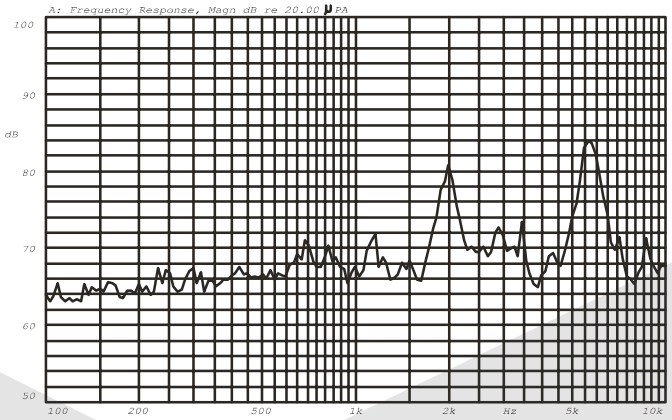

ORDER INFORMATION

Product NO.: KLS3- MT - 12*04

Part Number
Magnetic Transducer Buzzer Series
Size specifications

Magnetic Transducer Buzzer Series

KLS3-MT-12*06 Φ12*6mm Magnetic Transducer Buzzer Series

SPECIFICATIONS

Rated Voltage:	1.5V
Operating Voltage:	1-2V
Max.Rated Current:	70mA
Min.S.P.L. (@ 10cm):	85dB
Coil Resistance:	5.5 ± 1Ω
Resonant Frequency:	2700Hz
Operating Temp:	-20 ~ +70°C
Weight:	2g



Dimensions (Unit:mm)

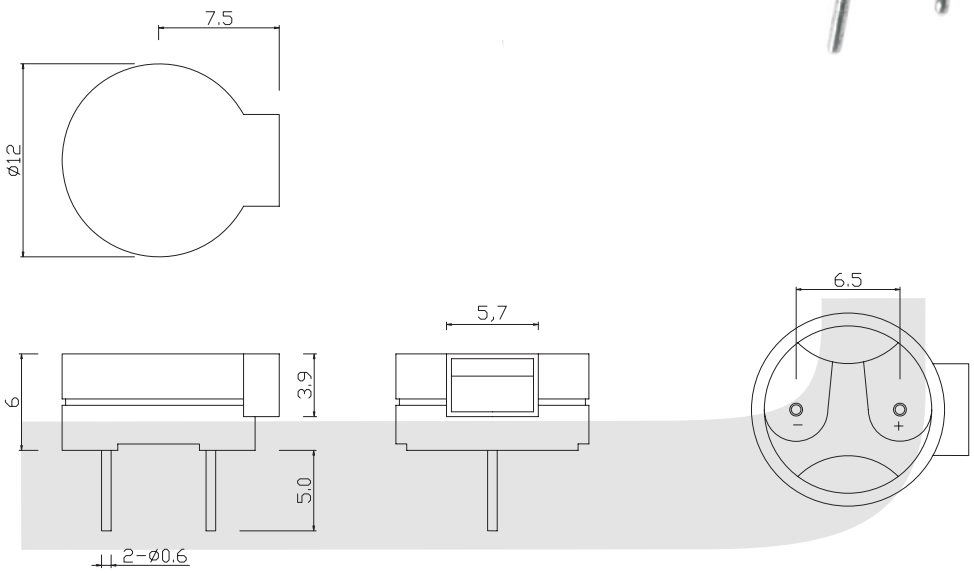

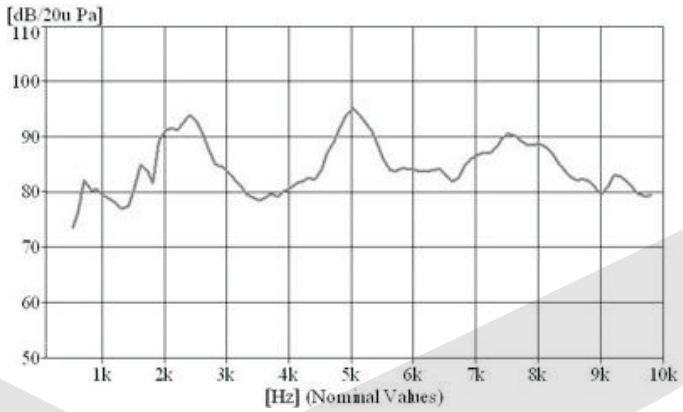

ORDER INFORMATION

Product NO.: KLS3- MT - 12*06

Part Number
Magnetic Transducer Buzzer Series
Size specifications

III

Magnetic Transducer Buzzer Series

KLS3-MT-12*09 Φ12*9mm Magnetic Transducer Buzzer Series

Dimensions (Unit:mm)

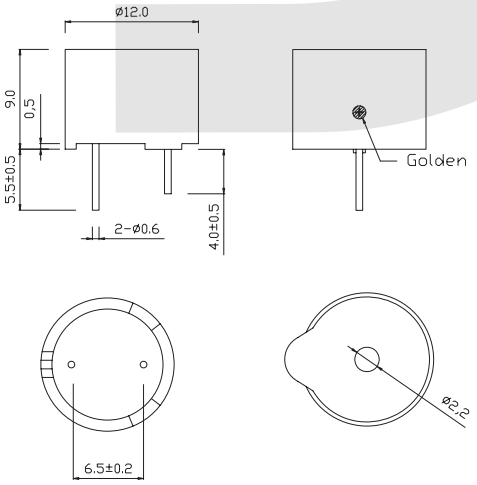

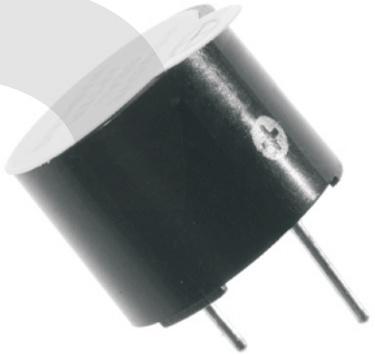

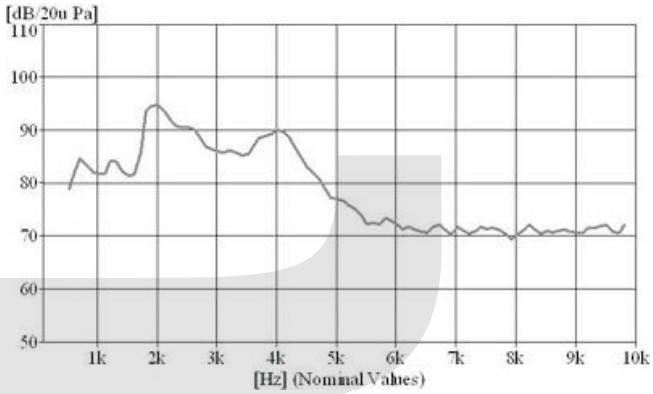

Order Code	Rated Voltage	Max.Rated Current	Coil Resistance	Resonant Frequency	Min.S.P.L. (@10cm)	Operating Voltage	Operating Temp	Weight
KLS3-MT-12*09-A1	1.5V	70mA	6.5±1Ω	2400Hz	80dB	1...2V		
KLS3-MT-12*09-A2	1.5V	30mA	16±2Ω	2048Hz	75dB	1...2V		
KLS3-MT-12*09-A3	1.5V	30mA	16±2Ω	2400Hz	75dB	1...2V		
KLS3-MT-12*09-A4	1.5V	30mA	16±2Ω	2600Hz	75dB	1...2V		
KLS3-MT-12*09-A5	1.5V	70mA	6.5±1Ω	2731Hz	80dB	1...2V	-20°C~ +70°C	2g
KLS3-MT-12*09-A6	1.5V	10mA	45±5Ω	2731Hz	70dB	1...2V		
KLS3-MT-12*09-A7	1.5V	10mA	45±5Ω	2400Hz	70dB	1...2V		
KLS3-MT-12*09-A8	1.5V	30mA	16±2Ω	2800Hz	85dB	1...2V		
KLS3-MT-12*09-B	5V	40mA	45±5Ω	2400Hz	85dB	4...8V		
KLS3-MT-12*09-C	12V	40mA	140±14Ω	2400Hz	85dB	8...16V		

ORDER INFORMATION

Product NO.: KLS3- MT - 12*09 - A1

Part Number
Magnetic Transducer Buzzer Series
Size specifications
Order Code

Magnetic Transducer Buzzer Series

KLS3-MT-12*5.5 Φ12*5.4mm Magnetic Transducer Buzzer Series

III

SPECIFICATIONS

Item No.	MT-12*5.5-A	MT-12*5.5-B
Rated Voltage	1. 5V	1. 5V
Operating Voltage	1-2V	1-2V
Max.Rated Current	10mA	30mA
Min.S.P.L. (@ 10cm)	70dB	75dB
Coil Resistance (DC)	16±4Ω	42±6Ω
Coil Resistance (AC)	40Ω	120Ω
Resonant Frequency	2048Hz	
Operating Temp	-20 ~ +70 ° C	
Weight	2g	



Dimensions (Unit:mm)

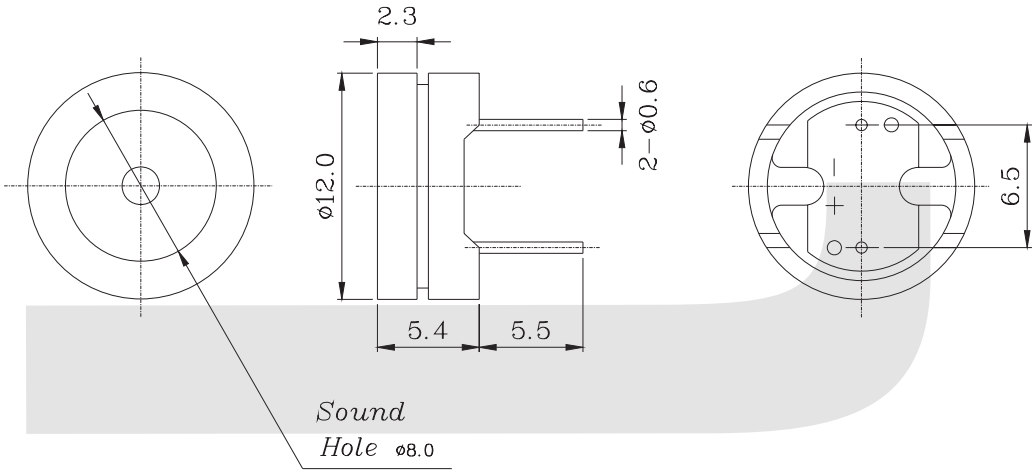

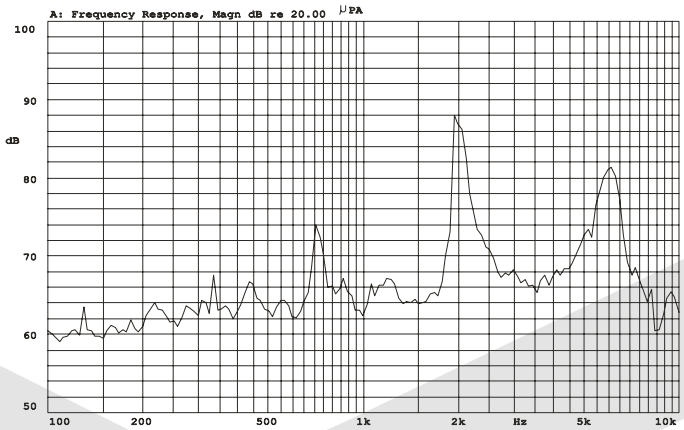

ORDER INFORMATION

Product NO.: KLS3- MT - 12*5.5 - A

- KLS3- : Part Number
- MT : Magnetic Transducer Buzzer Series
- 12*5.5 : Size specifications
- A : Max.Rated Current:A=10mA B=30mA

III

Magnetic Transducer Buzzer Series

KLS3-MT-12*7.5 Φ12*7.5mm Magnetic Transducer Buzzer Series

Order Code	KLS3-MT-12*7.5-A	KLS3-MT-12*7.5-B
Rated Voltage	1.5V	1.5V
Operating Voltage	1...2V	1...2V
Max.Rated Current	70mA	40mA
Min.S.P.L.（@10cm）	80dB	70dB
Coil Resistance	6.5±1Ω	42±6Ω
Resonant Frequency	2731Hz	2048Hz
Operating Temp	-20 ~ +70 °C	
Weight	2g	



Dimensions (Unit:mm)

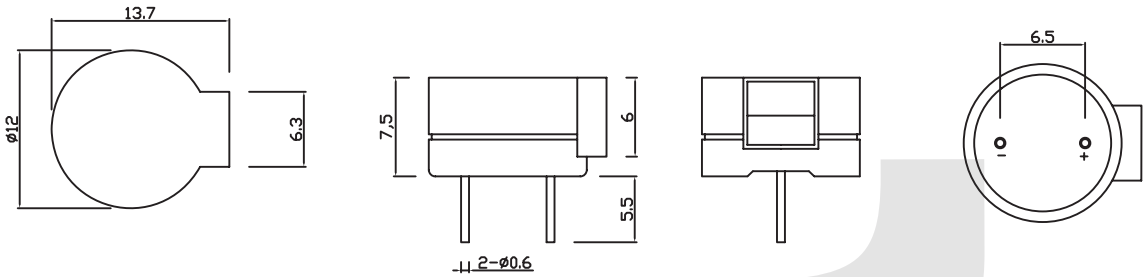

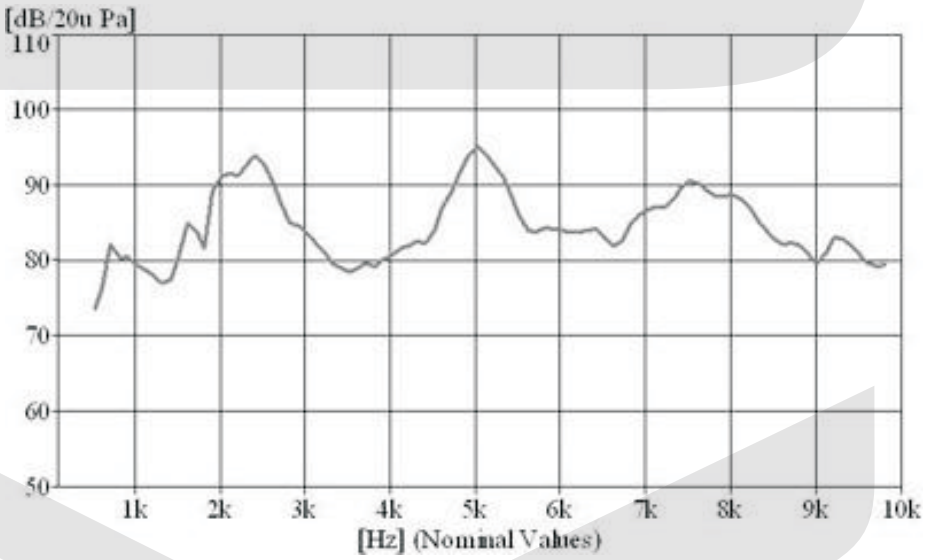

ORDER INFORMATION

Product NO.: KLS3- MT - 12*7.5 - A

Part Number
Magnetic Transducer Buzzer Series
Size specifications
Order Code

Magnetic Transducer Buzzer Series

KLS3-MT-12*8.5 Φ12*8.5mm Magnetic Transducer Buzzer Series

SPECIFICATIONS

Item No.	MT-12*8.5-A	MT-12*8.5-B	MT-12*8.5-C
Rated Voltage	1. 5V	1. 5V	1. 5V
Operating Voltage	1-2V	1-2V	1-2V
Max.Rated Current	30mA	10mA	10mA
Min.S.P.L. (@ 10cm)	85dB	80dB	80dB
Coil Resistance (DC)	16±4Ω	42±6Ω	50±7.5Ω
Resonant Frequency	2048Hz		
Operating Temp	-20 ~ +70 ° C		
Weight	2g		



Dimensions (Unit:mm)

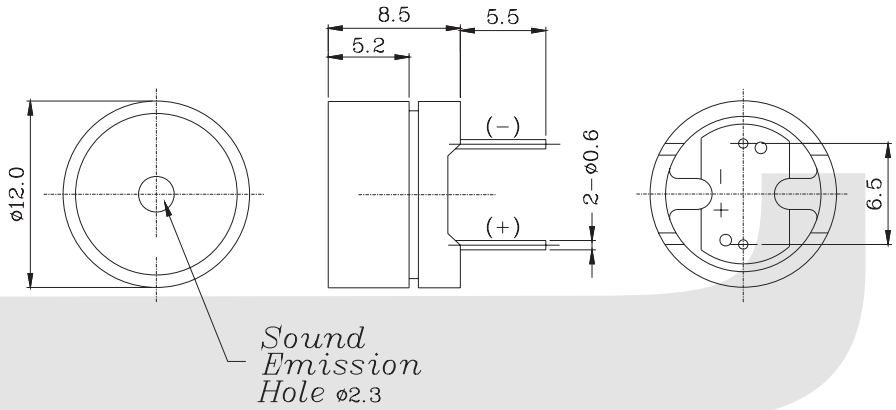

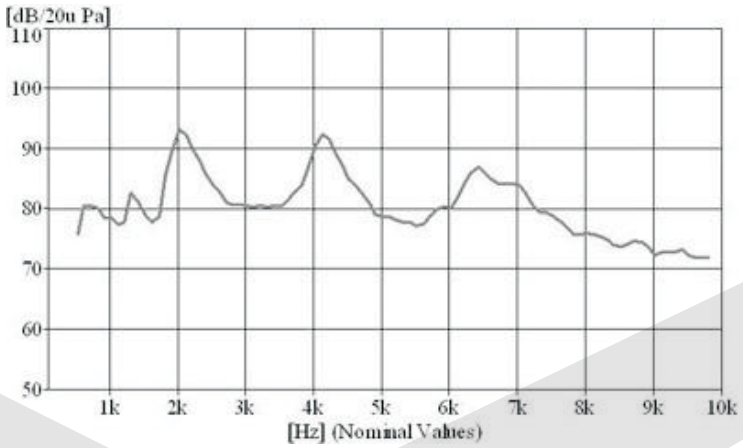

ORDER INFORMATION

Product NO.: KLS3- MT - 12*8.5 - A

- KLS3- : Part Number
- MT : Magnetic Transducer Buzzer Series
- 12*8.5 : Size specifications
- A : Coil Resistance:A=16Ω B=42Ω C=50Ω

Magnetic Transducer Buzzer Series

KLS3-MT-16*14 Φ16*14mm Magnetic Transducer Buzzer Series

Dimensions (Unit:mm)

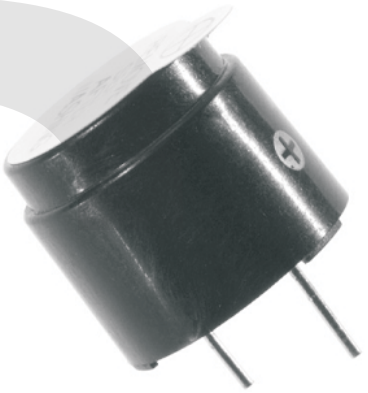

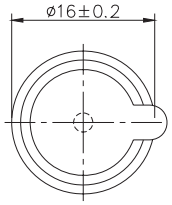

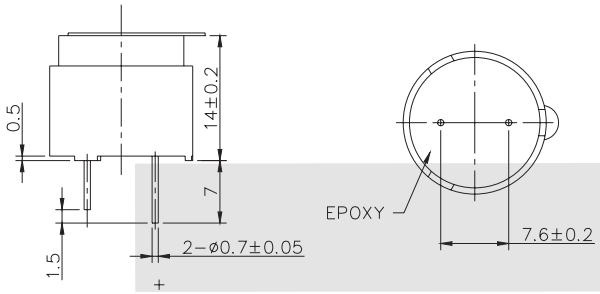

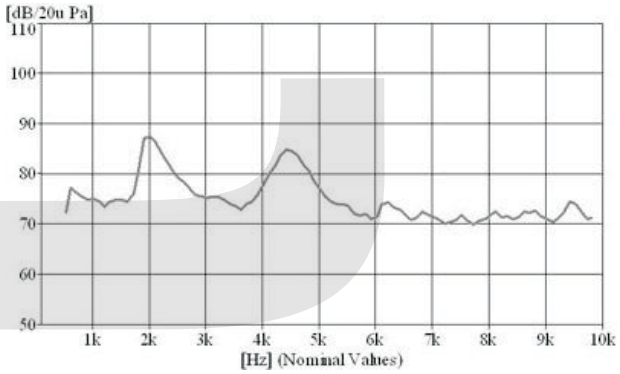

Order Code	Rated Voltage	Max.Rated Current	Coil Resistance	Min.S.P.L. (@10cm)	Operating Voltage	Resonant Frequency	Operating Temp	Weight
KLS3-MT-16*14-A	1.5V	15mA	27±3Ω	80dB	1...2V			
KLS3-MT-16*14-B	5V	40mA	50±5Ω	85dB	4...8V	2048	-20~+70°C	7g
KLS3-MT-16*14-C	12V	40mA	115±12Ω	85dB	8...16V			

ORDER INFORMATION

Product NO.: KLS3- MT - 16*14 - A

- KLS3: Part Number
- MT: Magnetic Transducer Buzzer Series
- 16*14: Size specifications
- A: Order Code

Magnetic Transducer Buzzer Series

KLS3-MT-16*14S Φ16*14mm Magnetic Transducer Buzzer Series

III

SPECIFICATIONS

Rated Voltage:	5V
Operating Voltage:	4-8V
Max.Rated Current:	40mA
Min.S.P.L. (@ 10cm):	85dB
Coil Resistance (DC):	50 ± 5Ω
Coil Impedance (AC):	110Ω
Resonant Frequency:	2048Hz
Operating Temp:	-20 ~ +70°C
Weight:	7g



Dimensions (Unit:mm)

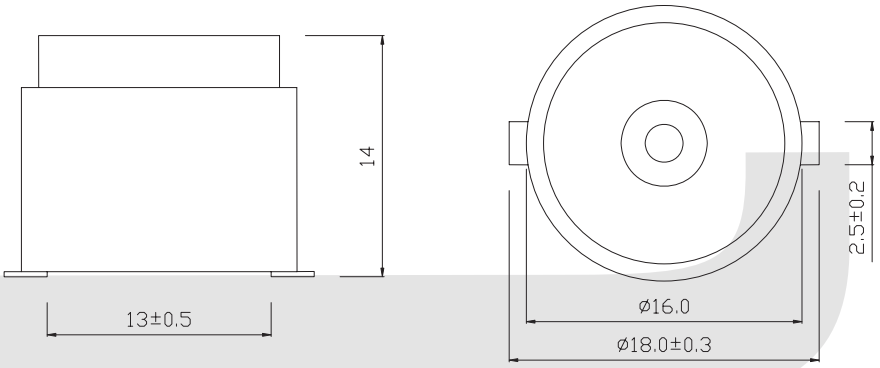

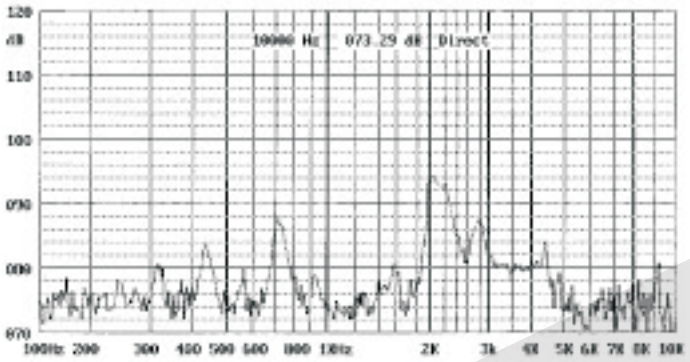

ORDER INFORMATION

Product NO.: KLS3- MT - 16*14 - S

- KLS3- : Part Number
- MT : Magnetic Transducer Buzzer Series
- 16*14 : Size specifications
- S : Order Code

Magnetic Transducer Buzzer Series

KLS3-MWC-9.6*05 Φ9.6*5mm With Circuit Magnetic Transducer Buzzer Series

Specifications

Rated Voltage:	5VDC
Operating Voltage:	3 ~ 7 VDC
Max.Rated Current:	30mA/5VDC
Min.S.P.L. (@ 10cm):	80dB/10cm
Resonant Frequency:	2400 ± 400Hz
Operating Temp:	-20 ~ +70°C
Weight:	0.8g



Dimensions (Unit:mm)

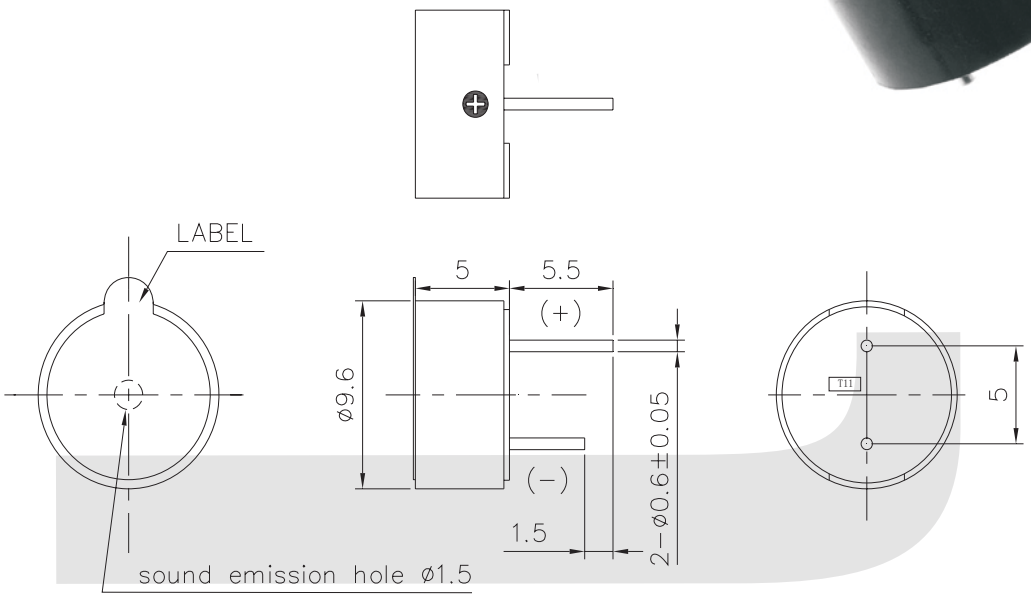

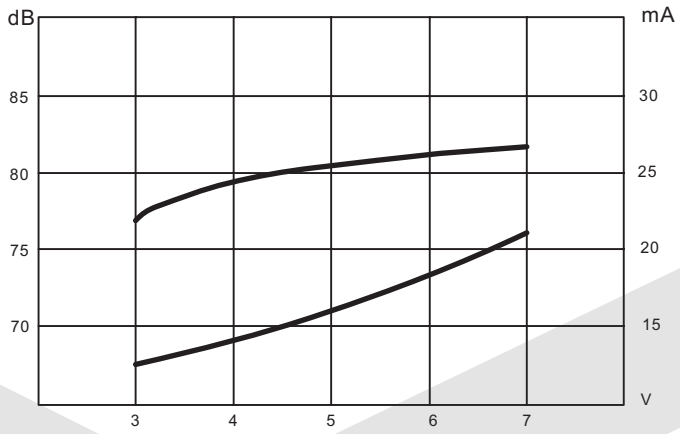

ORDER INFORMATION

Product NO.: KLS3- MWC - 9.6*05

- KLS3- : Part Number
- MWC : With Circuit Magnetic Transducer Buzzer Series
- 9.6*05 : Size specifications

Magnetic Transducer Buzzer Series

KLS3-MWC-12*7.5 Φ12*7.5mm With Circuit Magnetic Transducer Buzzer Series

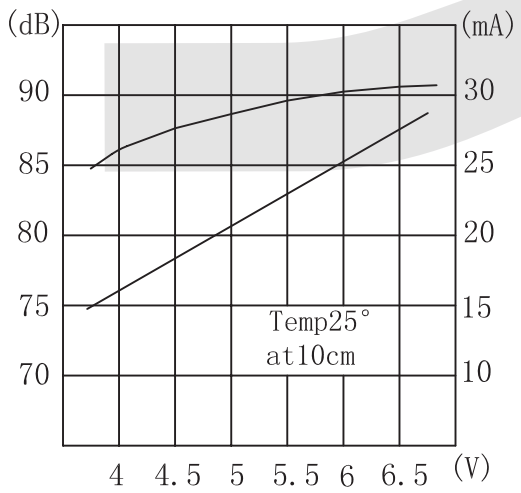

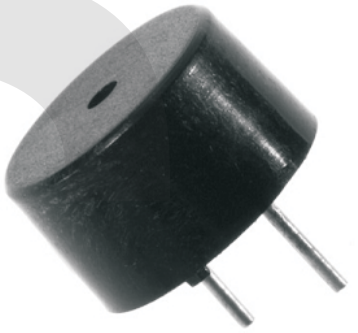

Dimensions (Unit:mm)

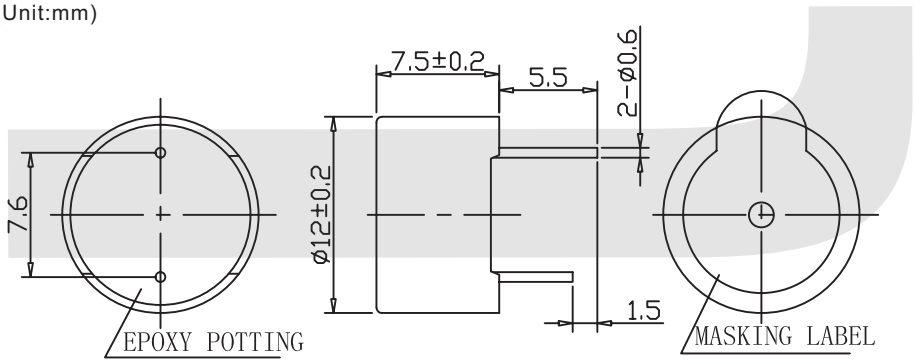

Order Code	Rated Voltage	Operating Voltage	Max.Rated Current	Min.S.P.L. (@10cm)	Resonant Frequency	Operating Temp	Weight
KLS3-MWC-12*7.5-A1	3V_{DC}	2~5V_{DC}	30mA	85dB	3.1 ±0.5KHz	-20 ~ +70 °C	2g
KLS3-MWC-12*7.5-A2	3V_{DC}	2~5V_{DC}	30mA	85dB	2.3 ±0.5KHz		
KLS3-MWC-12*7.5-B1	5V_{DC}	3~7V_{DC}	30mA	85dB	3.1 ±0.5KHz		
KLS3-MWC-12*7.5-B2	5V_{DC}	3~7V_{DC}	30mA	85dB	2.3 ±0.5KHz		
KLS3-MWC-12*7.5-C1	12V_{DC}	9~15V_{DC}	30mA	85dB	3.1 ±0.5KHz		
KLS3-MWC-12*7.5-C2	12V_{DC}	9~15V_{DC}	30mA	85dB	2.3 ±0.5KHz		

ORDER INFORMATION

Product NO.: KLS3- MWC - 12*7.5 - A1

- KLS3- : Part Number
- MWC : With Circuit Magnetic Transducer Buzzer Series
- 12*7.5 : Size specifications
- A1 : Order Code

III

Magnetic Transducer Buzzer Series

KLS3-MWC-12*9.5 Φ12*9.5mm With Circuit Magnetic Transducer Buzzer Series

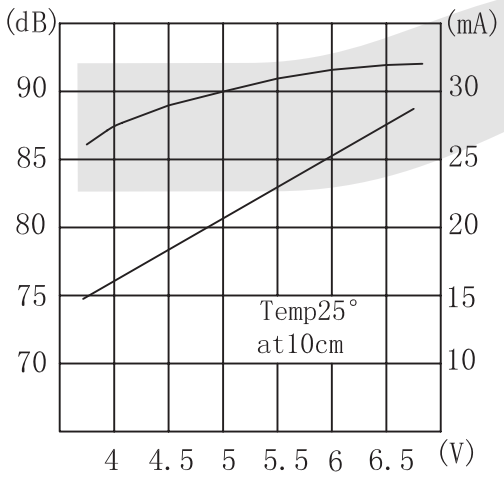

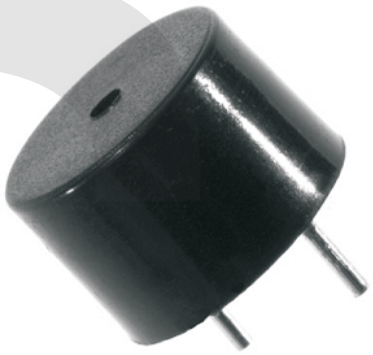

Dimensions (Unit:mm)

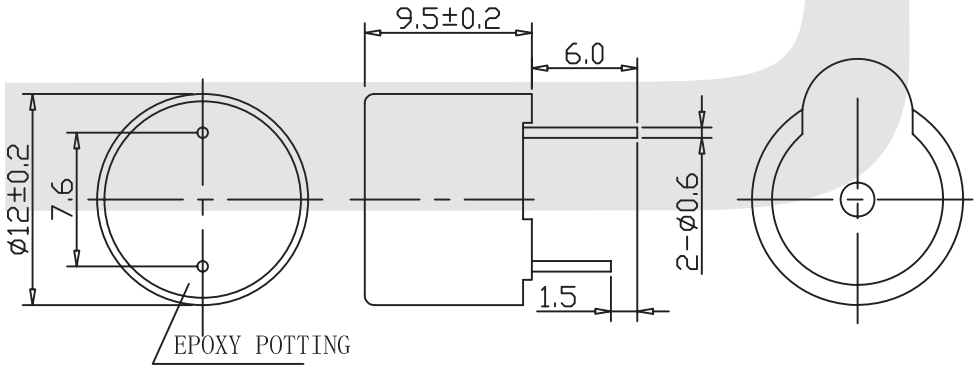

Order Code	Rated Voltage	Operating Voltage	Max.Rated Current	Min.S.P.L. (@10cm)	Resonant Frequency	Operating Temp	Weight
KLS3-MWC-12*9.5-A	1.5V_{DC}	1.2~3V_{DC}	30mA	75dB	2.3 ±0.4KHz		
KLS3-MWC-12*9.5-B	3V_{DC}	2~5V_{DC}	30mA	80dB	2.3 ±0.3KHz		
KLS3-MWC-12*9.5-C	5V_{DC}	4~7V_{DC}	30mA	85dB	2.3 ±0.3KHz	-20 ~ +70 °C	2g
KLS3-MWC-12*9.5-D	9V_{DC}	7~11V_{DC}	30mA	85dB	2.3 ±0.3KHz		
KLS3-MWC-12*9.5-E	12V_{DC}	8~16V_{DC}	30mA	85dB	2.3 ±0.3KHz		

ORDER INFORMATION

Product NO.: KLS3- MWC - 12*9.5 - A

Part Number
With Circuit Magnetic Transducer Buzzer Series
Size specifications
Order Code

III

Magnetic Transducer Buzzer Series

KLS3-MWC-16*14 Φ16*14mm With Circuit Magnetic Transducer Buzzer Series

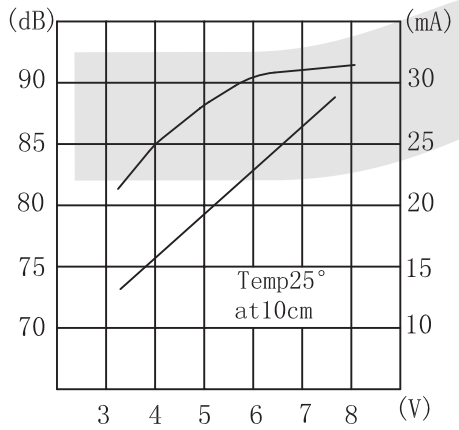



Dimensions (Unit:mm)

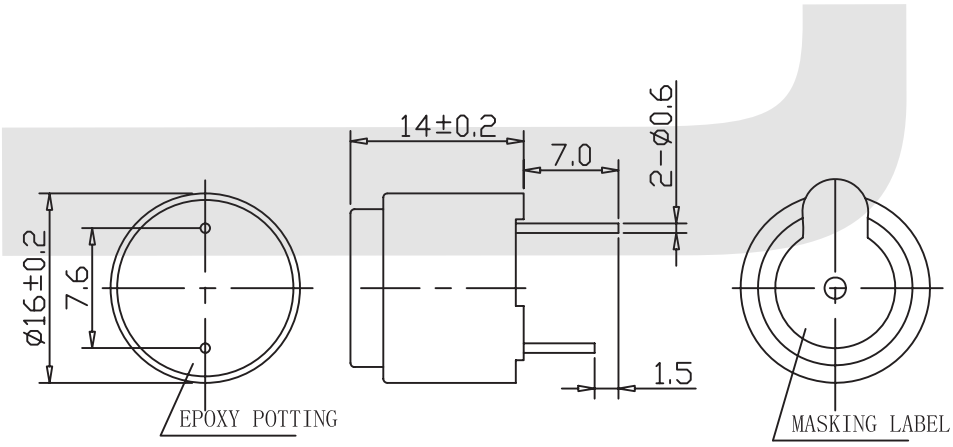

Order Code	Rated Voltage	Operating Voltage	Max.Rated Current	Min.S.P.L. (@10cm)	Resonant Frequency	Operating Temp	Weight
KLS3-MWC-16*14-A	5V_{DC}	4~8V_{DC}	30mA	85dB	2.3 ±0.4KHz	-20 ~ +70 °C	7g
KLS3-MWC-16*14-B	12V_{DC}	8~15V_{DC}	30mA	85dB	2.3 ±0.3KHz		

ORDER INFORMATION

Product NO.: KLS3- MWC - 16*14 - A

Part Number
With Circuit Magnetic Transducer Buzzer Series
Size specifications
Order Code

Piezo Buzzer Series

KLS3-PB-16∗14 With Circuit Piezo Buzzer Series

Order Code	KLS3-PB-16*14-A	KLS3-PB-16*14-B
Rated Voltage	$5V_{DC}$	$12V_{DC}$
Operating Voltage	$1…18V_{DC}$	$6…18V_{DC}$
Max.Rated Current	15mA	20mA
Resonant Frequency	4.0±0.5KHz	4.0±0.5KHz
Min.S.P.L.(@10cm)	80dB	85dB
Tone Nature	Continuous	
Operating Temp	-20~+80°C	
Weight	2g	

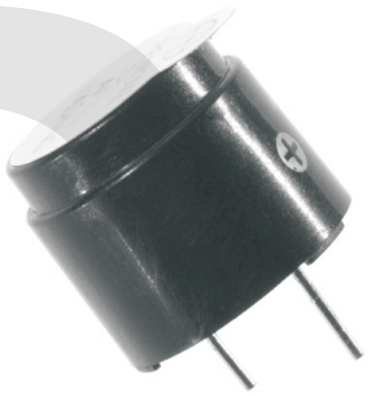

Dimensions (Unit:mm)

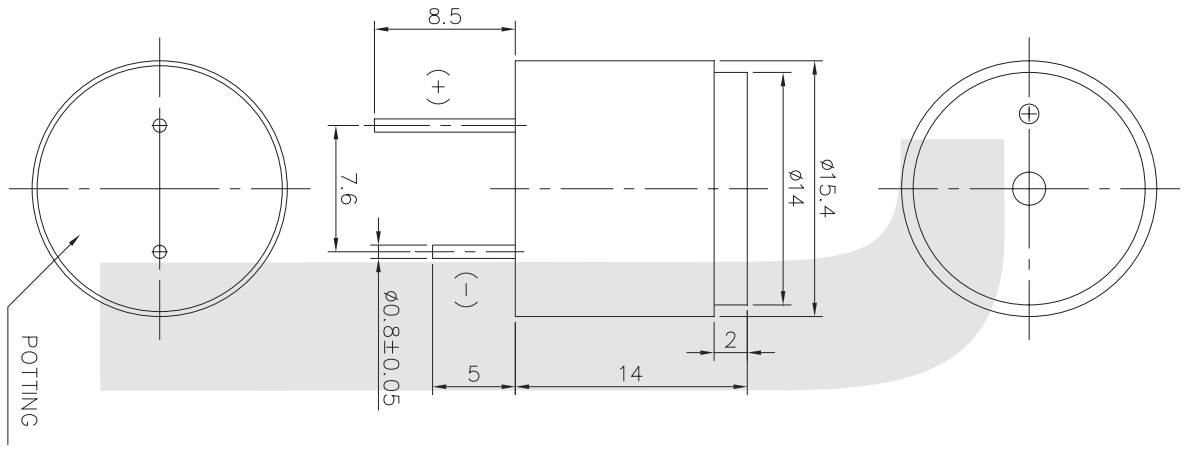

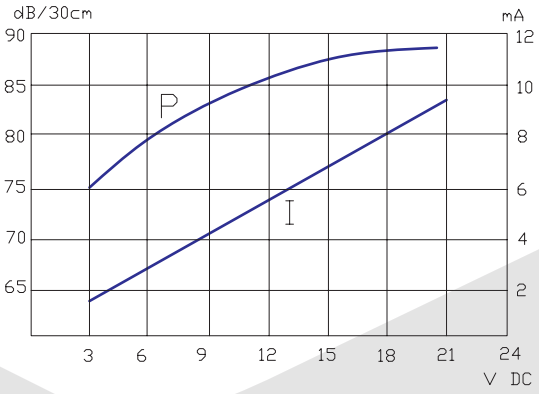

ORDER INFORMATION

Product NO.: KLS3- PB - 16∗14-A

Part Number
Piezo Buzzer Series
Order Code

Piezo Transducer Series

KLS3-PT-12*06 Without Circuit Piezo Transducer Buzzer Series

Order Code	KLS3-PT-12*06-A	KLS3-PT-12*06-B
Rated Voltage	5Vp-p	12Vp-p
Max.Allowable Voltage	30Vp-p	30Vp-p
Max. Rated Current	3mA	6mA
Resonant Frequency	4.0±0.5KHz	4.0±0.5KHz
Min.S.P.L.（@10cm）	75dB	80dB
Capacitance at 1,000Hz	11000±30% Pf	11000±30% Pf
Operating Temp	-20℃~+70℃	-20℃~+70℃
Weight	1.2g	1.2g

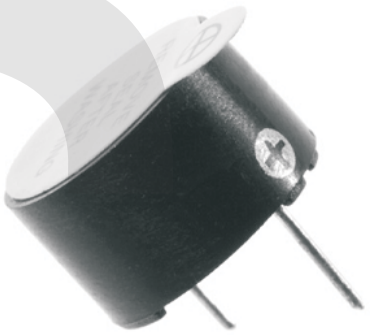

Dimensions (Unit:mm)

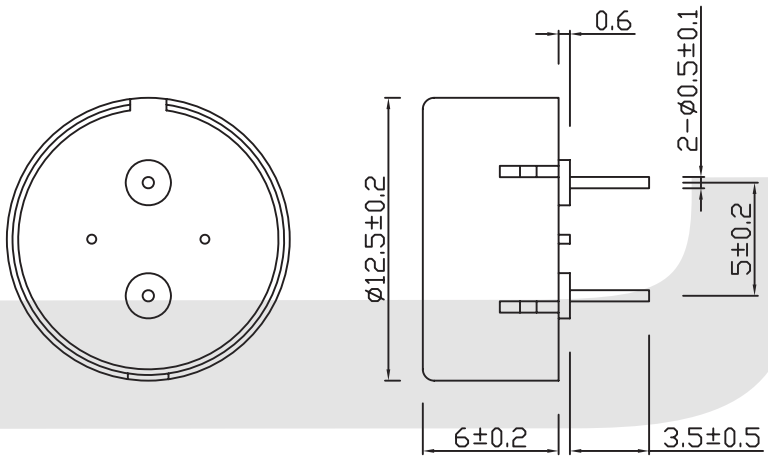

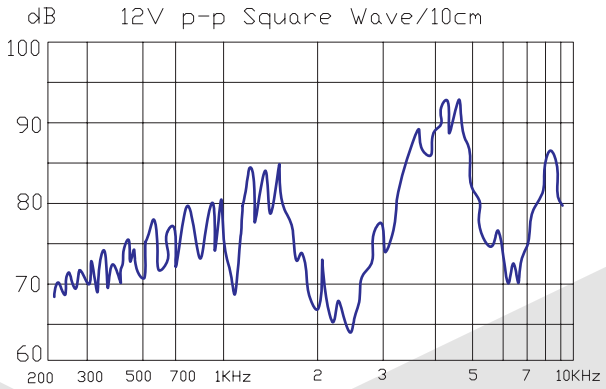

ORDER INFORMATION

Product No.: KLS3 - PT - 12*06-A

- KLS3 — Part Number
- PT — Without Circuit Piezo Transducer Buzzer Series
- 12*06-A — Order Code

Piezo Transducer Series

KLS3-PT-12*7. 5 Without Circuit Piezo Transducer Buzzer Series

III

SPECIFICATIONS

Rated Voltage:	$12V_{p-p}$
Max.Allowable Voltage:	$30V_{p-p}$
Max. Rated Current:	3mA
Min.S.P.L. (@ 10cm):	80dB at 10cm
Capacitance at 1,000 Hz:	11000 ± 30% pF
Resonant Frequency:	4.5 ± 0.5KHz
Operating Temp:	-20°C~+70°C
Weight:	2g



Dimensions (Unit:mm)

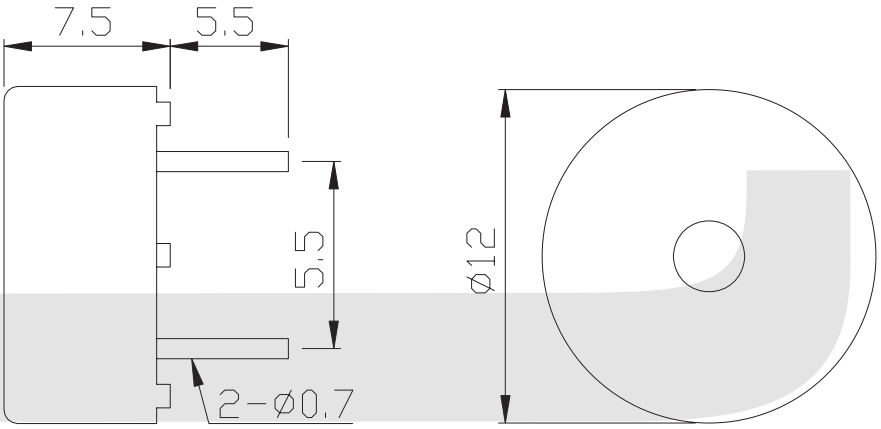

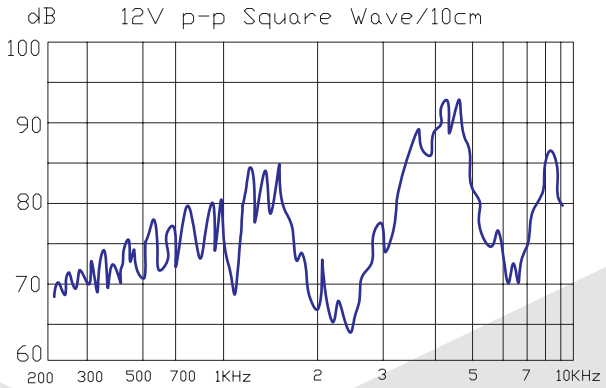

ORDER INFORMATION

Product No.: KLS3 - PT - 12*7. 5

- KLS3 — Part Number
- PT — Without Circuit Piezo Transducer Buzzer Series
- 12*7. 5 — Dimension

Piezo Transducer Series

KLS3-PT-14*7. 5 Without Circuit Piezo Transducer Buzzer Series

SPECIFICATIONS

Rated Voltage:	5Vp-p
Operating Voltage:	1 ... 20Vp-p
Max. Rated Current:	1mA
Min.S.P.L. (@ 10cm):	80dB
Resonant Frequency:	4.0 ± 0.5KHz
Capacitance at 1,000 Hz:	12000 ± 30% pF
Operating Temp:	-20°C~ +70 °C
Weight:	2g

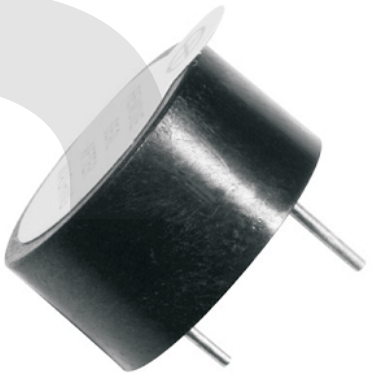

Dimensions (Unit:mm)

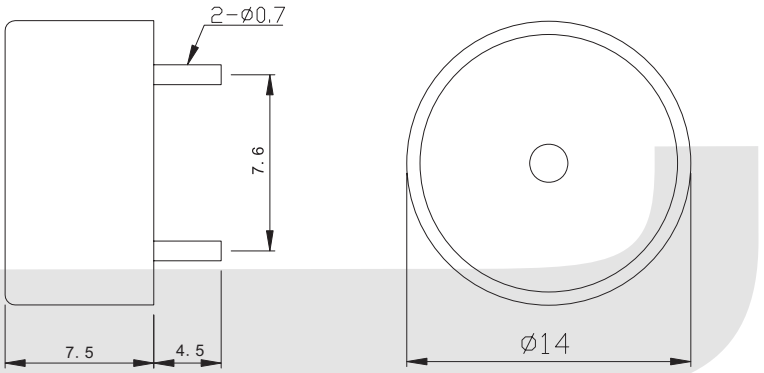

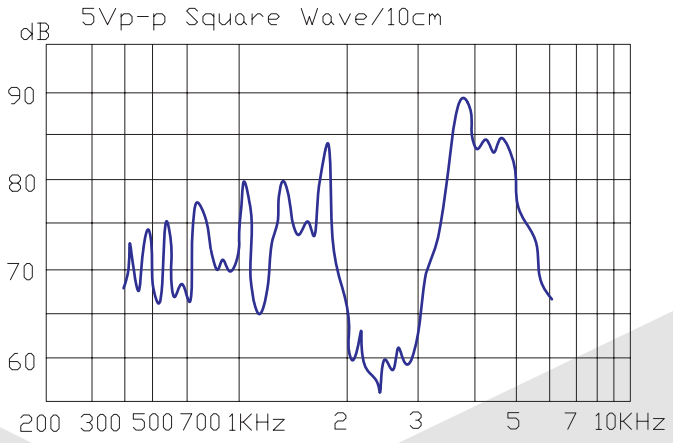

ORDER INFORMATION

Product No.: KLS3 - PT - 14*7. 5

- KLS3 — Part Number
- PT — Without Circuit Piezo Transducer Buzzer Series
- 14*7. 5 — Order Code

Piezo Transducer Series

KLS3-PT-14*08 Without Circuit Piezo Transducer Buzzer Series

III

SPECIFICATIONS

Rated Voltage:	10Vp-p
Operating Voltage:	1 ... 30Vp-p
Max. Rated Current:	2mA
Min.S.P.L. (@ 10cm):	80dB
Resonant Frequency:	4.0 ± 0.5KHz
Capacitance at 1,000 Hz:	13000 ± 30% pF
Operating Temp:	-20°C~ +70 °C
Weight:	2g



Dimensions (Unit:mm)

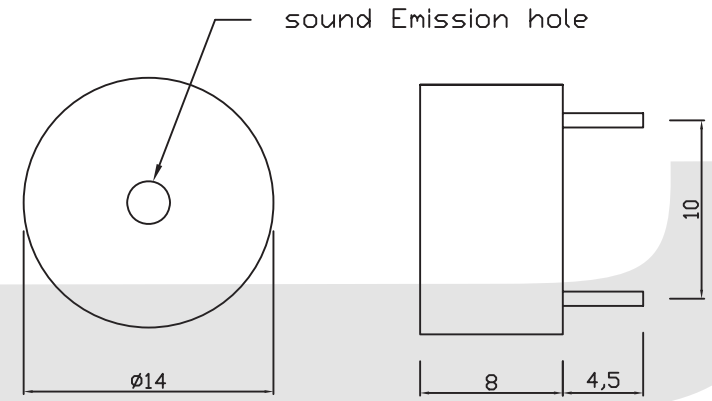

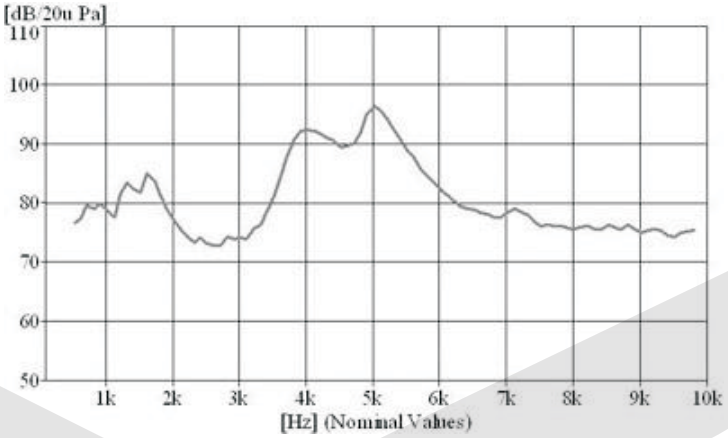

ORDER INFORMATION

Product No.: KLS3 - PT - 14*08

- KLS3 — Part Number
- PT — Without Circuit Piezo Transducer Buzzer Series
- 14*08 — Order Code

Piezo Transducer Series

KLS3-PT-17*08 Without Circuit Piezo Transducer Buzzer Series

Order Code	KLS3-PT-17*08-A	KLS3-PT-17*08-B
Rated Voltage	5Vp-p	9Vp-p
Operating Voltage	1...30Vp-p	1...30Vp-p
Max. Rated Current	1mA	2.5mA
Resonant Frequency	4.0±0.5KHz	4.0±0.5KHz
Min.S.P.L.（@10cm）	85dB	80dB
Capacitance at 1,000Hz	14000±30% Pf	14000±30% Pf
Operating Temp	-20°C~+70°C	-20°C~+70°C
Weight	1g	1g



Dimensions (Unit:mm)

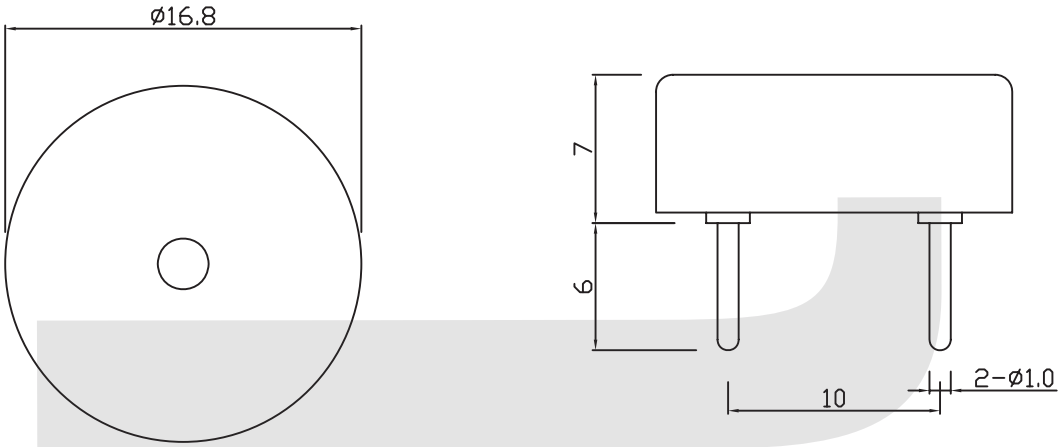

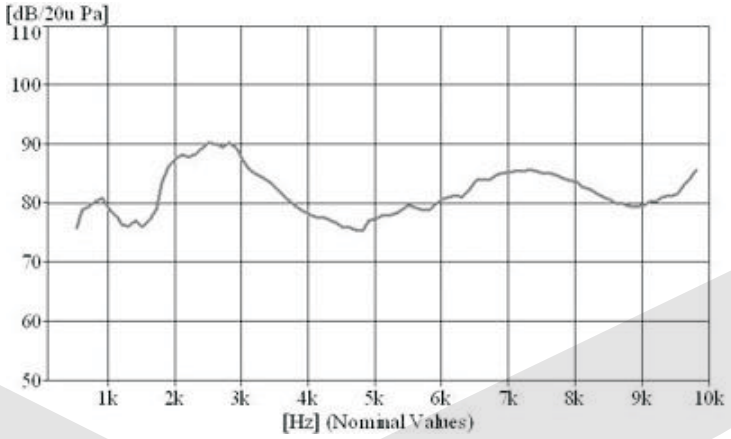

ORDER INFORMATION

Product No.: KLS3 - PT - 17*08-A

- KLS3 — Part Number
- PT — Without Circuit Piezo Transducer Buzzer Series
- 17*08-A — Order Code

Piezo Transducer Series

KLS3-PT-22*07 Without Circuit Piezo Transducer Buzzer Series

Order Code	KLS3-PT-22*07-A	KLS3-PT-22*07-B
Rated Voltage	3Vp-p	9Vp-p
Operating Voltage	1...30Vp-p	1...30Vp-p
Max. Rated Current	1.2mA	4mA
Resonant Frequency	4.0±0.5KHz	4.0±0.5KHz
Min.S.P.L.（@10cm）	70dB	82dB
Capacitance at 1,000Hz	14000±30% pF	14000±30% pF
Operating Temp	-20℃~+70℃	-20℃~+70℃
Weight	3g	3g

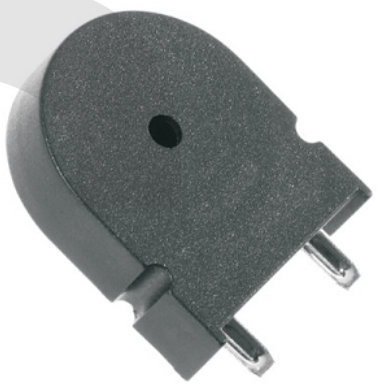

Dimensions (Unit:mm)

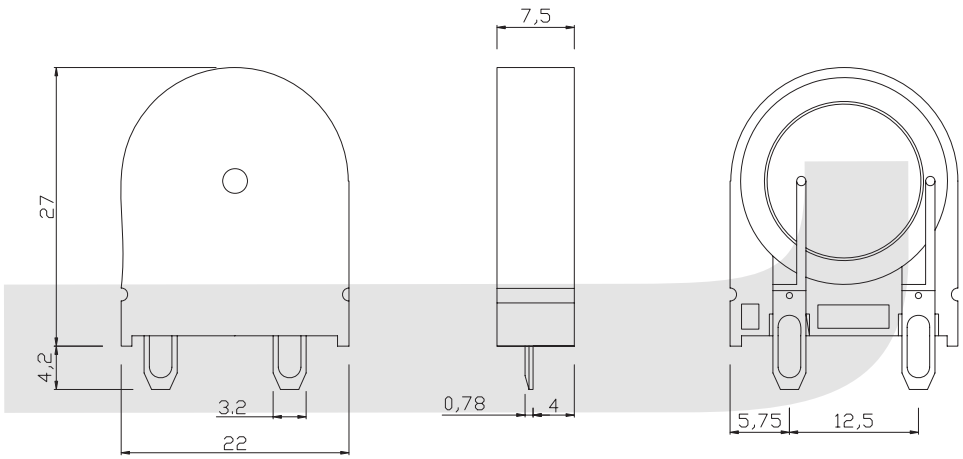

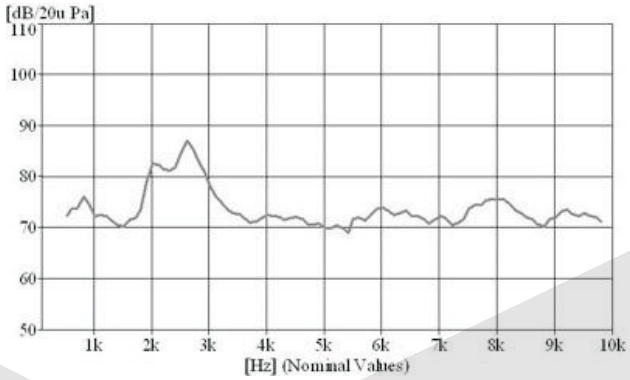

ORDER INFORMATION

Product No.: KLS3 - PT - 22*07-A

- KLS3 — Part Number
- PT — Without Circuit Piezo Transducer Buzzer Series
- 22*07-A — Order Code

Piezo Transducer Series

KLS3-PT-22*08 Without Circuit Piezo Transducer Buzzer Series

Order Code	KLS3-PT-22*08-A	KLS3-PT-22*08-B
Rated Voltage	3Vp-p	9Vp-p
Operating Voltage	1...30Vp-p	1...30Vp-p
Max. Rated Current	2mA	3mA
Resonant Frequency	4.0±0.5KHz	4.0±0.5KHz
Min.S.P.L.（@10cm）	75dB	80dB
Capacitance at 1,000Hz	14000±30% Pf	14000±30% Pf
Operating Temp	-20℃~+70℃	-20℃~+70℃
Weight	2.5g	2.5g



Dimensions (Unit:mm)

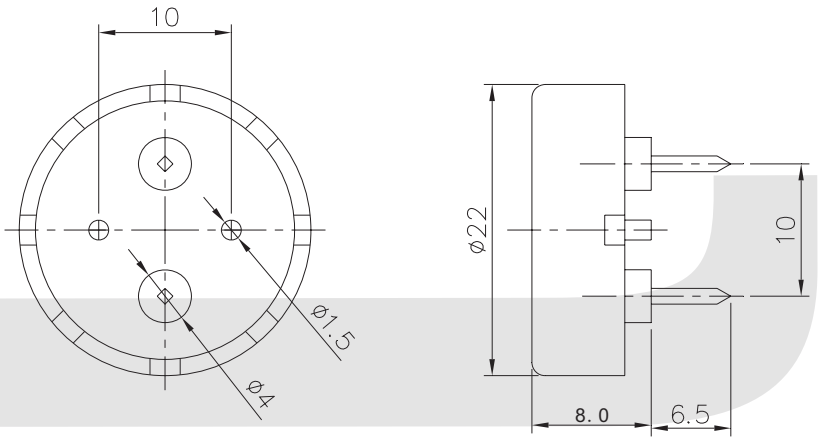

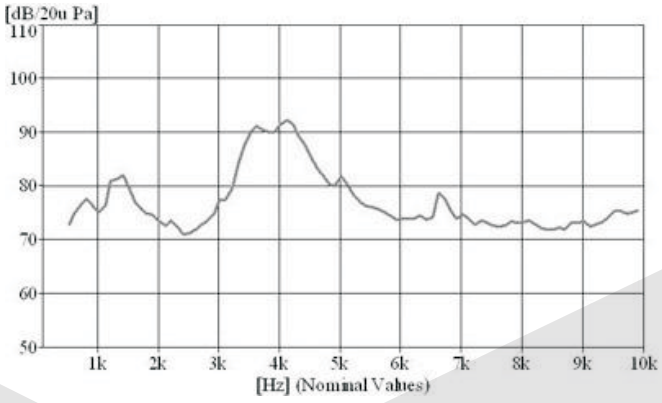

ORDER INFORMATION

Product No.: KLS3 - PT - 22*08-A

- KLS3 — Part Number
- PT — Without Circuit Piezo Transducer Buzzer Series
- 22*08-A — Order Code

Piezo Transducer Series

KLS3-PT-23*10 Without Circuit Piezo Transducer Buzzer Series

Order Code	KLS3-PT-23*10-A	KLS3-PT-23*10-B
Rated Voltage	5Vp-p	12Vp-p
Operating Voltage	1...40Vp-p	1...40Vp-p
Max. Rated Current	3.5mA	4mA
Resonant Frequency	3.0±0.5KHz	3.0±0.5KHz
Min.S.P.L.（@10cm）	80dB	95dB
Capacitance at 1,000Hz	15000±30% Pf	15000±30% Pf
Operating Temp	-20℃~+70℃	-20℃~+70℃
Weight	3g	3g



Dimensions (Unit:mm)

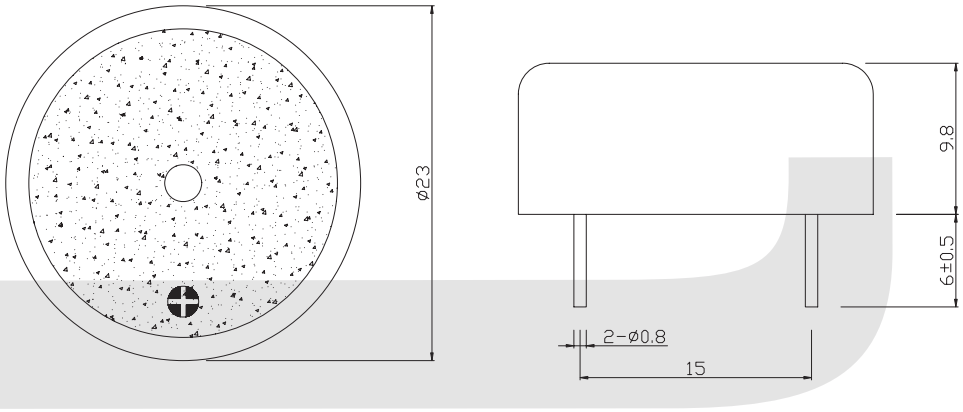

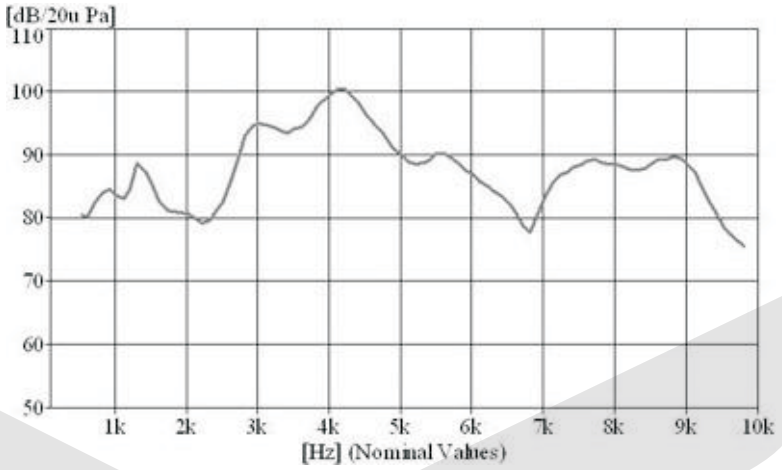

ORDER INFORMATION

Product No.: KLS3 - PT - 23*10-A

- KLS3 — Part Number
- PT — Without Circuit Piezo Transducer Buzzer Series
- 23*10-A — Order Code

III

Piezo Transducer Series

KLS3-PT-26*09 Without Circuit Piezo Transducer Buzzer Series

Order Code	KLS3-PT-26*09
Rated Voltage	10Vp-p
Operating Voltage	1…40Vp-p
Max. Rated Current	3.5mA
Resonant Frequency	2.5±0.5KHz
Min.S.P.L.（@10cm）	80dB
Capacitance at 1,000Hz	24000±30% pF
Operating Temp	-20°C~+70°C
Weight	3g

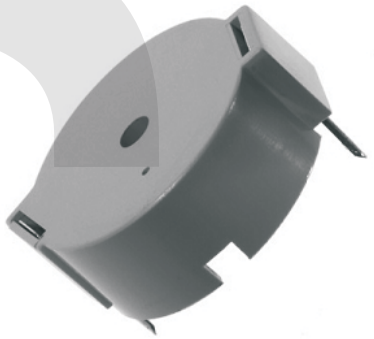

Dimensions (Unit:mm)

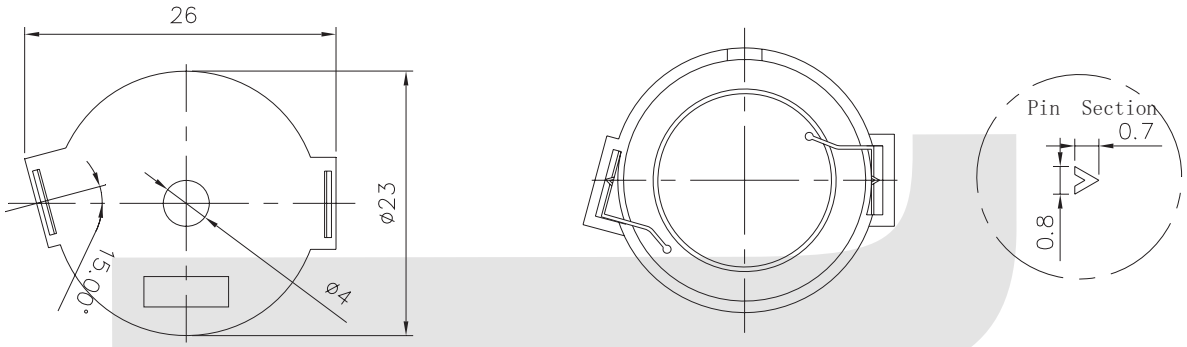

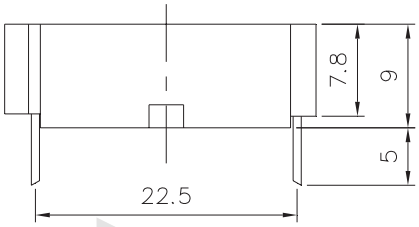

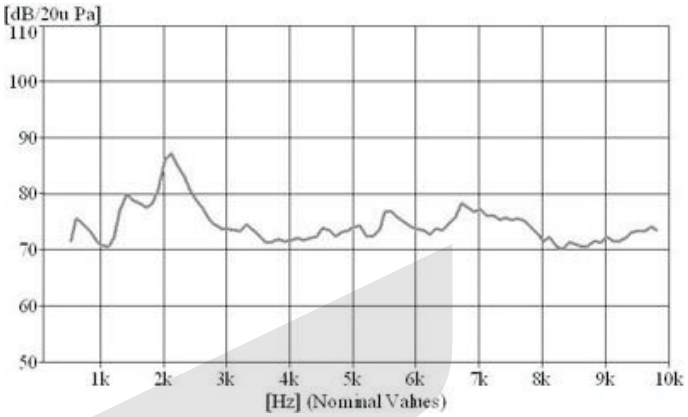

ORDER INFORMATION

Product No.: KLS3 - PT - 26*09

- KLS3 — Part Number
- PT — Without Circuit Piezo Transducer Buzzer Series
- 26*09 — Order Code

Piezo Transducer Series

KLS3-PT-27∗11 Without Circuit Piezo Transducer Buzzer Series

Order Code	KLS3-PT-27*11
Rated Voltage	12Vp-p
Operating Voltage	1...30Vp-p
Max. Rated Current	3.5mA
Resonant Frequency	2.5±0.5KHz
Min.S.P.L.（@10cm）	78dB
Capacitance at 1,000Hz	24000±30% pF
Operating Temp	-20°C~+70°C
Weight	3g



Dimensions (Unit:mm)

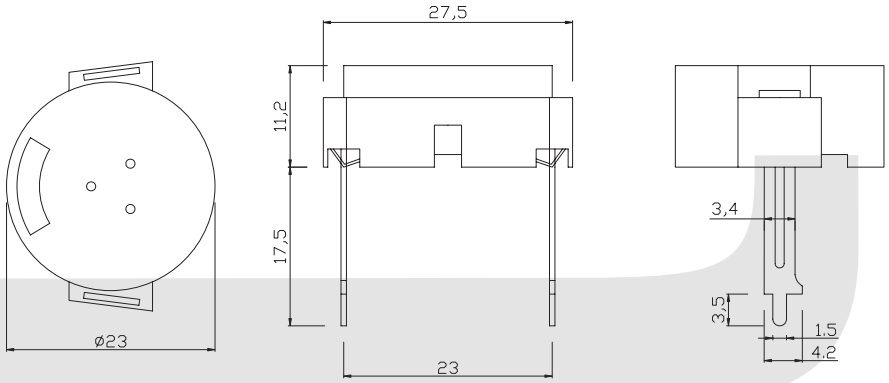

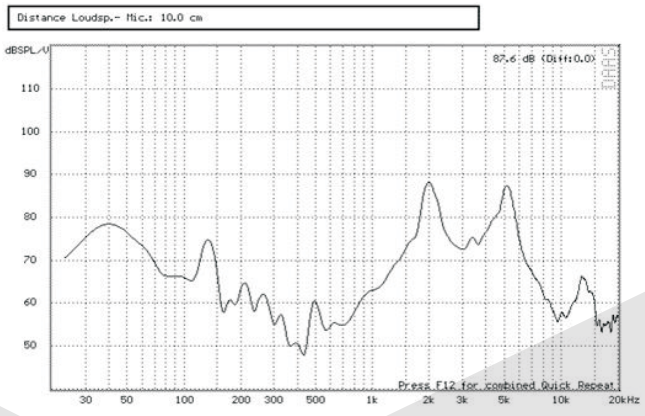

ORDER INFORMATION

Product No.: KLS3 - PT - 27∗11

- KLS3 — Part Number
- PT — Without Circuit Piezo Transducer Buzzer Series
- 27∗11 — Order Code

Piezo Transducer Series

KLS3-PT-30*09 Without Circuit Piezo Transducer Buzzer Series

Order Code	KLS3-PT-30*09-A	KLS3-PT-30*09-B
Rated Voltage	9Vp-p	12Vp-p
Operating Voltage	1…40Vp-p	1…40Vp-p
Max. Rated Current	3mA	5mA
Resonant Frequency	3.6±0.5KHz	3.6±0.5KHz
Min.S.P.L.（@10cm）	85dB	90dB
Capacitance at 1,000Hz	18000±30% Pf	18000±30% Pf
Operating Temp	-20℃~+70℃	-20℃~+70℃
Weight	7g	7g



Dimensions (Unit:mm)

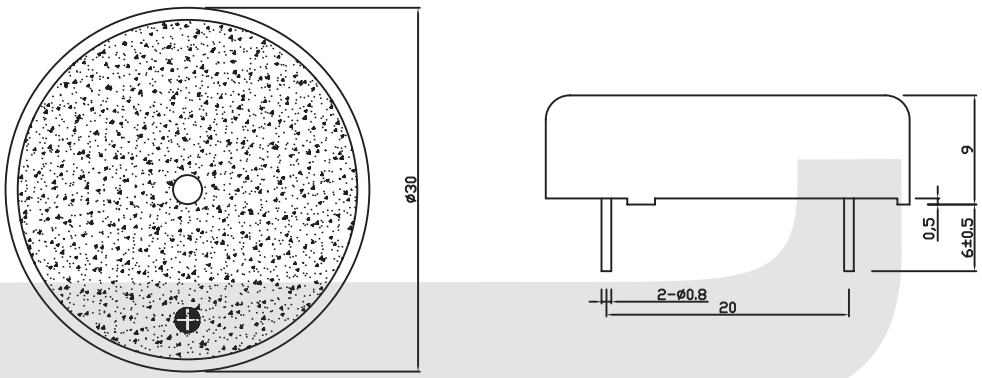



ORDER INFORMATION

Product No.: KLS3 - PT - 30*09-A

- KLS3 — Part Number
- PT — Without Circuit Piezo Transducer Buzzer Series
- 30*09-A — Order Code

Piezo Transducer Series

KLS3-PT-34*8. 5 Without Circuit Piezo Transducer Buzzer Series

III

SPECIFICATION

Rated Voltage:	$12V_{p-p}$
Operating Voltage:	1 ... $30V_{p-p}$
Max. Rated Current:	3.5mA
Min.S.P.L. (@ 10cm):	75dB
Resonant Frequency:	1.0 ± 0.5KHz
Capacitance at 1,000 HZ:	45000 ± 30% pF
Operating Temp:	-20 ~ +70 °C
Weight:	7g

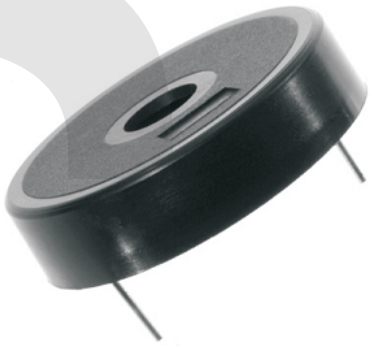

Dimensions (Unit:mm)

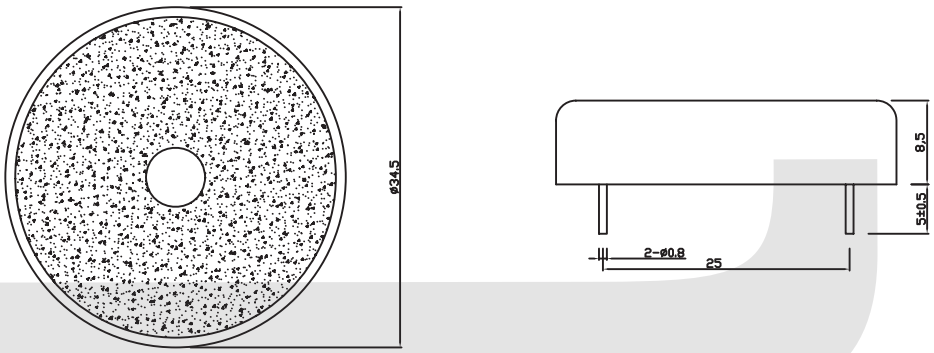

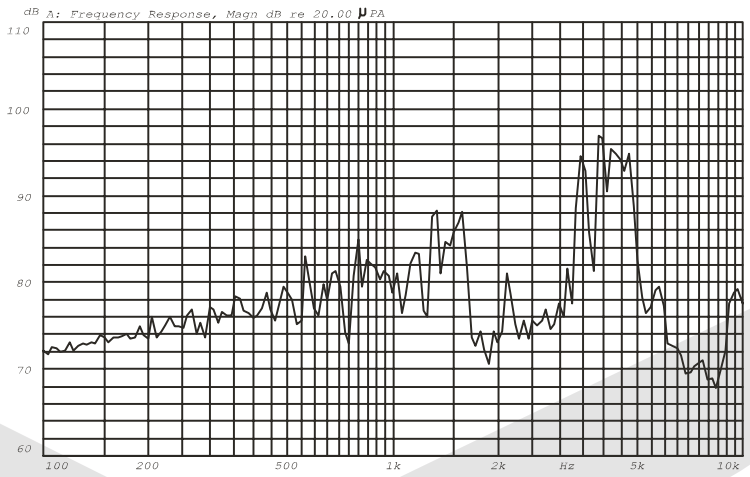

ORDER INFORMATION

Product No.: KLS3 - PT - 34*8. 5

- KLS3 — Part Number
- PT — Without Circuit Piezo Transducer Buzzer Series
- 34*8. 5 — Order Code

Piezo Transducer Series

KLS3-LPT-13*2. 5 Without Circuit Piezo Transducer Buzzer Series

Order Code	KLS3-LPT-13*2.5-A	KLS3-LPT-13*2.5-B
Rated Voltage	5Vp-p	10Vp-p
Operating Voltage	3…20Vp-p	3…20Vp-p
Max. Rated Current	2mA	4mA
Resonant Frequency	3.4±0.5KHz	3.4±0.5KHz
Min.S.P.L.（@10cm）	70dB	80dB
Capacitance at 1,000Hz	9000±30% pF	15000±30% pF
Operating Temp	-20°C~+70°C	-20°C~+70°C
Weight	0.6g	0.6g



Dimensions (Unit:mm)

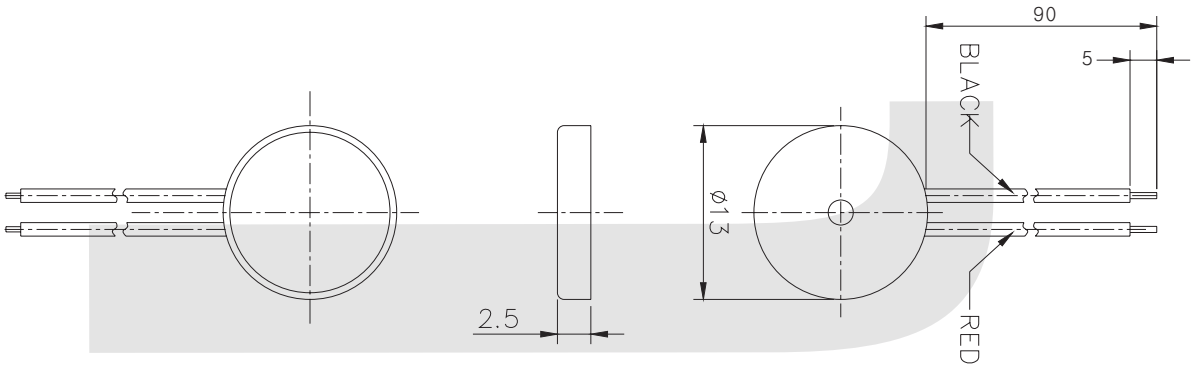

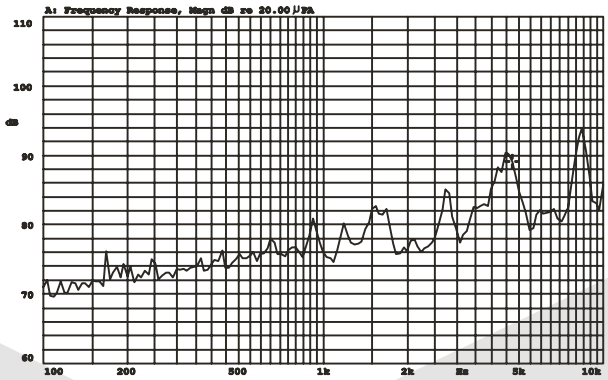

ORDER INFORMATION

Product No.: KLS3 - LPT - 13*2. 5-A

- KLS3 - Part Number
- LPT - Without Circuit Piezo Transducer Buzzer Series
- 13*2. 5-A - Order Code

III

Piezo Transducer Series

KLS3-LPT-14*04 Without Circuit Piezo Transducer Buzzer Series

Order Code	KLS3-LPT-14*04-A	KLS3-LPT-14*04-B
Rated Voltage	5Vp-p	10Vp-p
Operating Voltage	3…30Vp-p	3…30Vp-p
Max. Rated Current	2mA	3mA
Resonant Frequency	4.8±0.5KHz	4.8±0.5KHz
Min.S.P.L.（@10cm）	80dB	85dB
Capacitance at 1,000Hz	12000±30% pF	15000±30% pF
Operating Temp	-20°C~+70°C	-20°C~+70°C
Weight	1g	1g



Dimensions (Unit:mm)

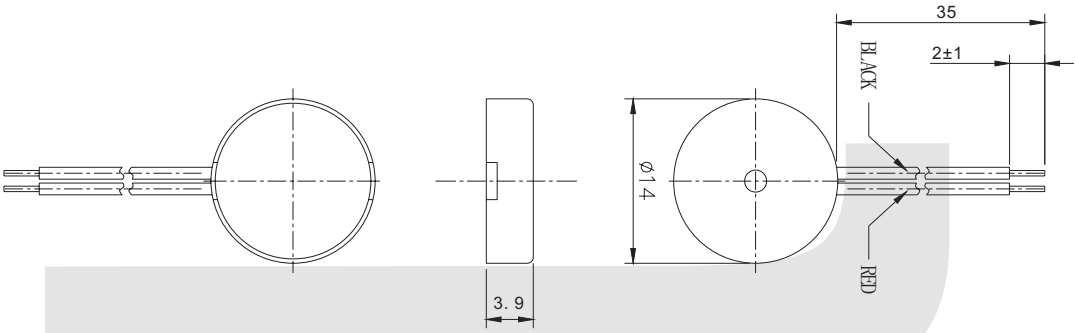

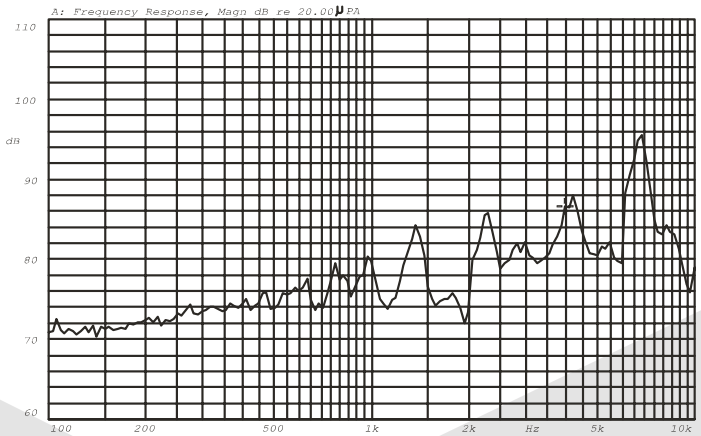

ORDER INFORMATION

Product No.: KLS3 - LPT - 14*04-A

- KLS3 — Part Number
- LPT — Without Circuit Piezo Transducer Buzzer Series
- 14*04-A — Order Code

Piezo Transducer Series

KLS3-LPT-17∗04-A Without Circuit Piezo Transducer Buzzer Series

Order Code	KLS3-LPT-17*04-A
Rated Voltage	9Vp-p
Operating Voltage	3…30Vp-p
Max. Rated Current	1.5mA
Resonant Frequency	4±0.5KHz
Min.S.P.L.（@10cm）	72dB
Capacitance at 1,000Hz	9500±30% pF
Operating Temp	-20℃~+70℃
Weight	1.2g



Dimensions (Unit:mm)

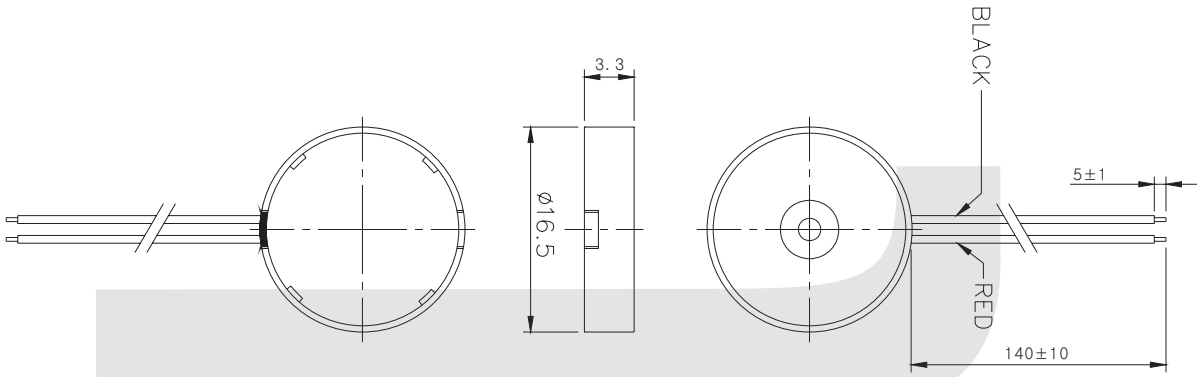

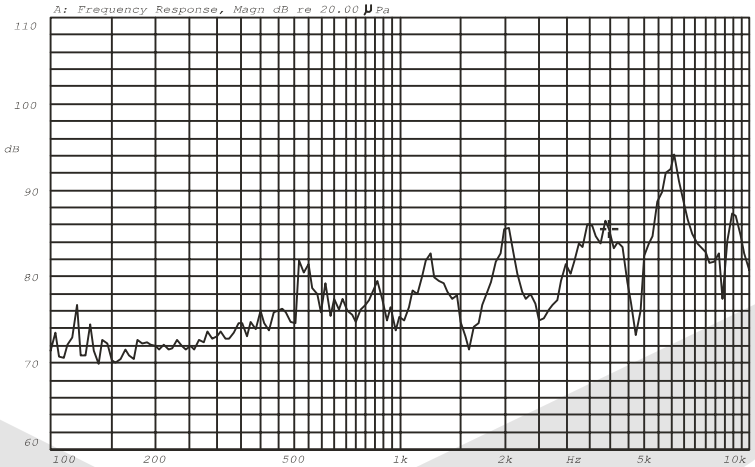

ORDER INFORMATION

Product No.: KLS3 - LPT - 17∗04-A

- KLS3 — Part Number
- LPT — Without Circuit Piezo Transducer Buzzer Series
- 17∗04-A — Order Code

III

Piezo Transducer Series

KLS3-LPT-17∗04-B Without Circuit Piezo Transducer Buzzer Series

Order Code	KLS3-LPT-17*04-B
Rated Voltage	9Vp-p
Operating Voltage	3…30Vp-p
Max. Rated Current	3mA
Resonant Frequency	4±0.5KHz
Min.S.P.L.（@10cm）	80dB
Capacitance at 1,000Hz	14000±30% pF
Operating Temp	-20℃~+70℃
Weight	1.2g



Dimensions (Unit:mm)

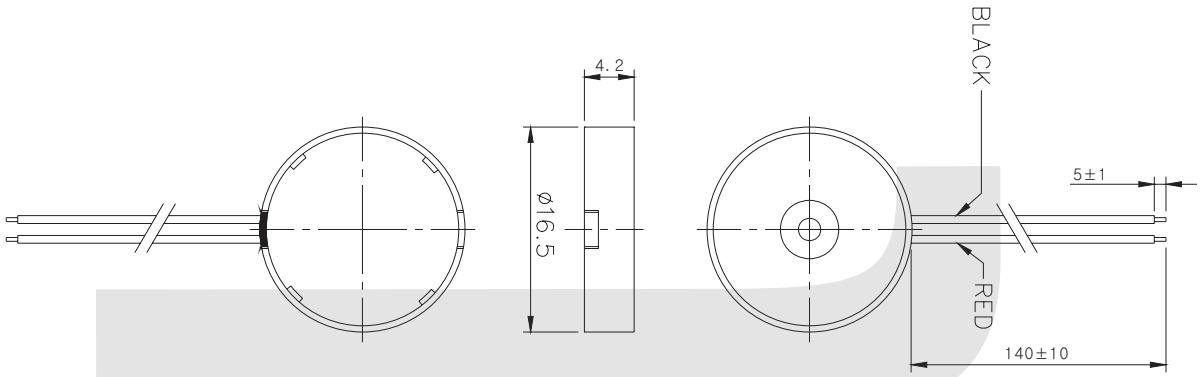

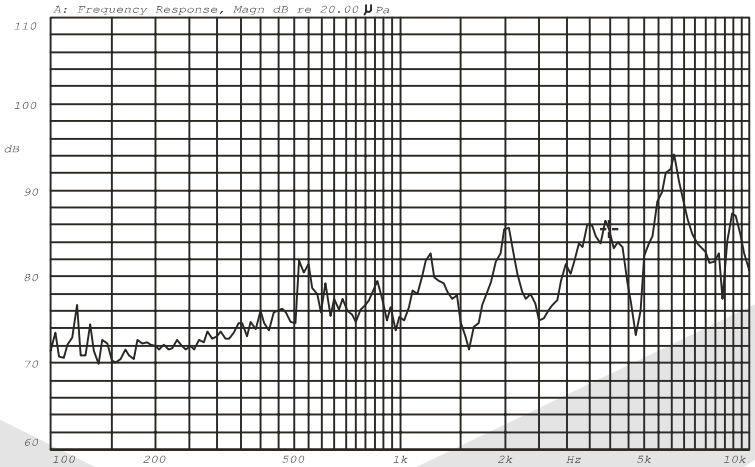

ORDER INFORMATION

Product No.: KLS3 - LPT - 17∗04-B

Part Number

Without Circuit Piezo Transducer Buzzer Series

Order Code

III

Piezo Transducer Series

KLS3-LPT-23*4. 2 Without Circuit Piezo Transducer Buzzer Series

Order Code	KLS3-LPT-23*4.2
Rated Voltage	12Vp-p
Operating Voltage	1…30Vp-p
Max. Rated Current	2mA
Resonant Frequency	4±0.5KHz
Min.S.P.L.（@10cm）	80dB
Capacitance at 1,000Hz	24000±30% pF
Operating Temp	-20°C~+70°C
Weight	2g



Dimensions (Unit:mm)

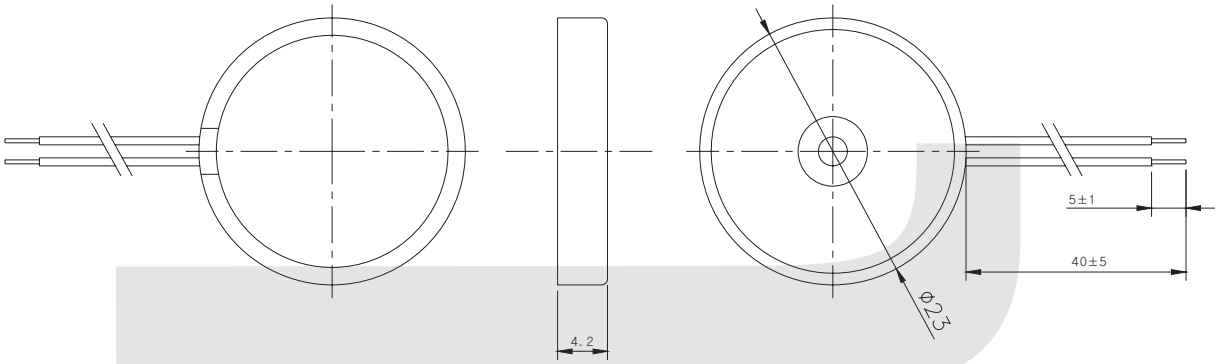

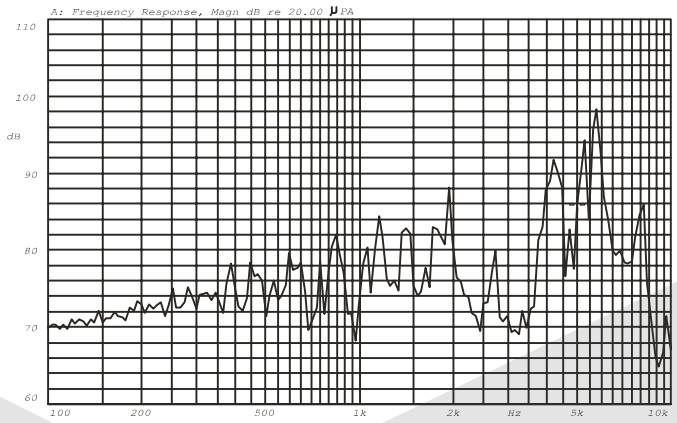

ORDER INFORMATION

Product No.: KLS3 - LPT - 23*4. 2

- KLS3 — Part Number
- LPT — Without Circuit Piezo Transducer Buzzer Series
- 23*4. 2 — Order Code

Piezo Transducer Series

KLS3-LPT-23*4. 6 Without Circuit Piezo Transducer Buzzer Series

Order Code	KLS3-LPT-23*4.6
Rated Voltage	12Vp-p
Operating Voltage	1…30Vp-p
Max. Rated Current	3mA
Resonant Frequency	4±0.5KHz
Min.S.P.L.（@10cm）	80dB
Capacitance at 1,000Hz	24000±30% pF
Operating Temp	-20℃~+70℃
Weight	2g



Dimensions (Unit:mm)

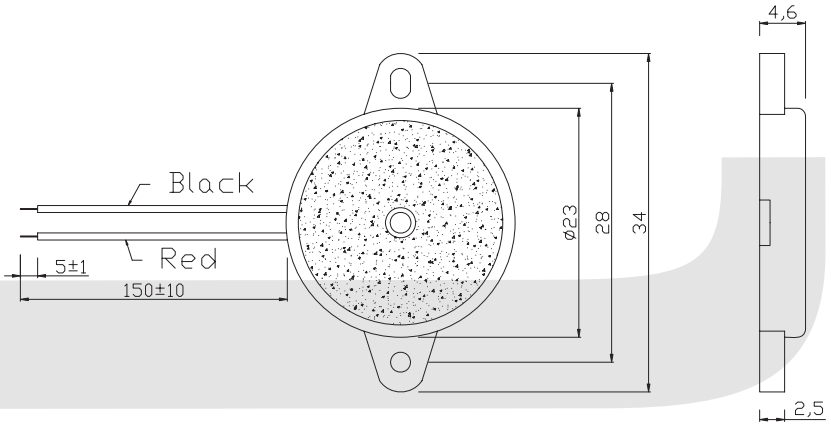

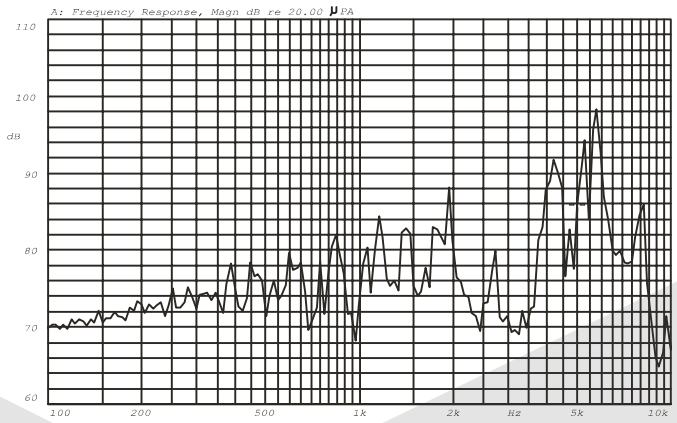

ORDER INFORMATION

Product No.: KLS3 - LPT - 23*4. 6

- KLS3 — Part Number
- LPT — Without Circuit Piezo Transducer Buzzer Series
- 23*4. 6 — Order Code

III

Piezo Transducer Series

KLS3-LPT-30∗16 Without Circuit Piezo Transducer Buzzer Series

Order Code	KLS3-LPT-30*16
Rated Voltage	9Vp-p
Operating Voltage	3…28Vp-p
Max. Rated Current	180mA
Resonant Frequency	3.4±0.5KHz
Min.S.P.L.（@10cm）	100dB
Capacitance at 120Hz	25000±30% pF
Operating Temp	-20°C~+70°C
Weight	8g



Dimensions (Unit:mm)

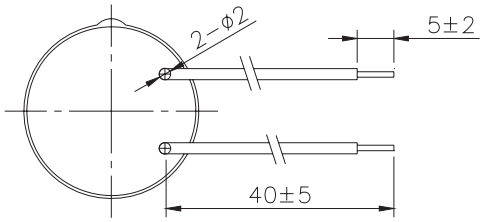

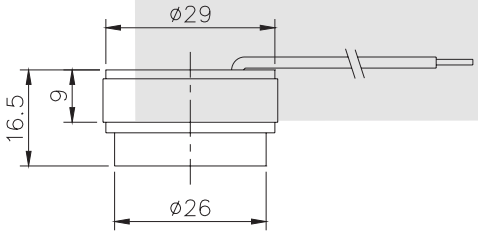

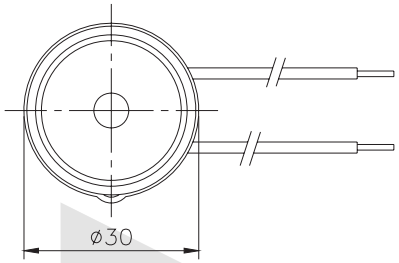

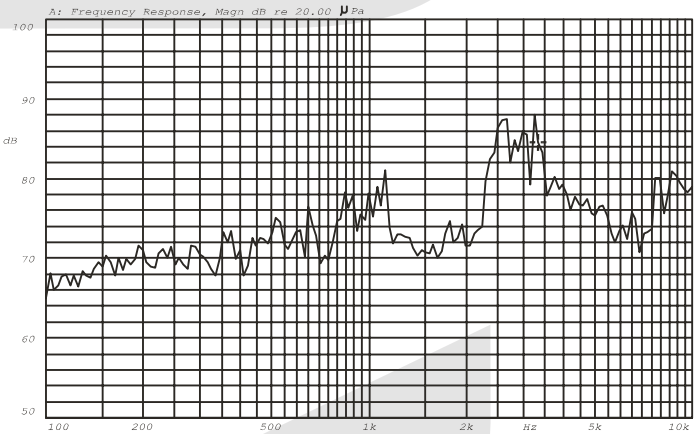

ORDER INFORMATION

Product No.: KLS3 - LPT - 30∗16

- KLS3 — Part Number
- LPT — Without Circuit Piezo Transducer Buzzer Series
- 30∗16 — Order Code

Piezo Transducer Series

KLS3-LPT-30∗5. 7 Without Circuit Piezo Transducer Buzzer Series

Order Code	KLS3-LPT-30*5.7
Rated Voltage	12Vp-p
Operating Voltage	1…30Vp-p
Max. Rated Current	3.5mA
Resonant Frequency	1.5±0.5KHz
Min.S.P.L.（@10cm）	75dB
Capacitance at 1,000Hz	45000±30% pF
Operating Temp	-20℃~+70℃
Weight	3.5g



Dimensions (Unit:mm)

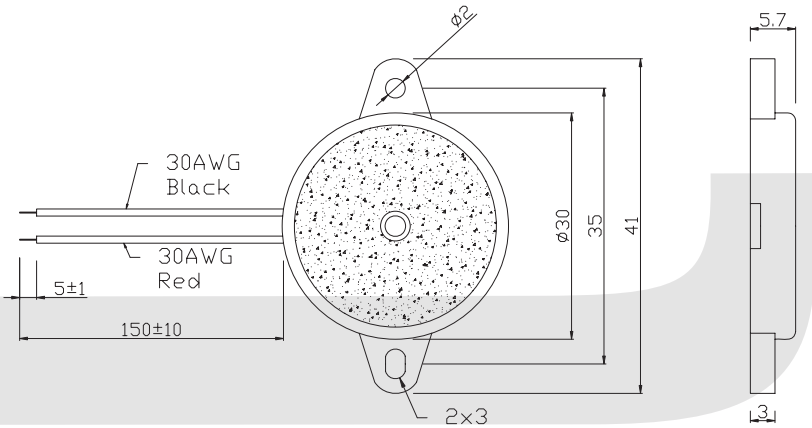

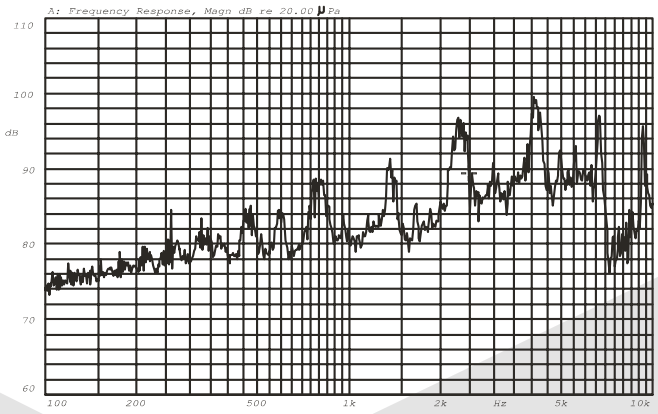

ORDER INFORMATION

Product No.: KLS3 - LPT - 30∗5. 7

Part Number

Without Circuit Piezo Transducer Buzzer Series

Order Code

Piezo Transducer Series

KLS3-LPT-35*8. 5 Without Circuit Piezo Transducer Buzzer Series

Order Code	KLS3-LPT-35*8.5
Rated Voltage	10Vp-p
Operating Voltage	1…30Vp-p
Max. Rated Current	9mA
Resonant Frequency	1.1±0.5KHz
Min.S.P.L.（@10cm）	85dB
Capacitance at 120Hz	45000±30% pF
Operating Temp	-20°C~+70°C
Weight	5g



Dimensions (Unit:mm)

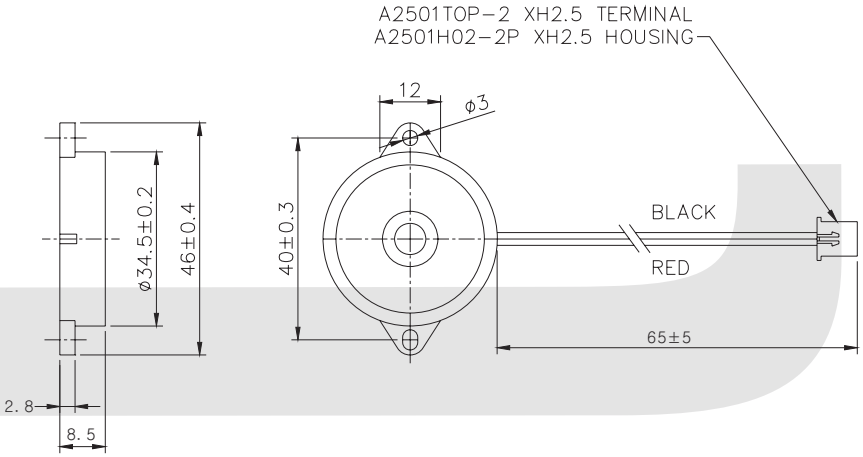

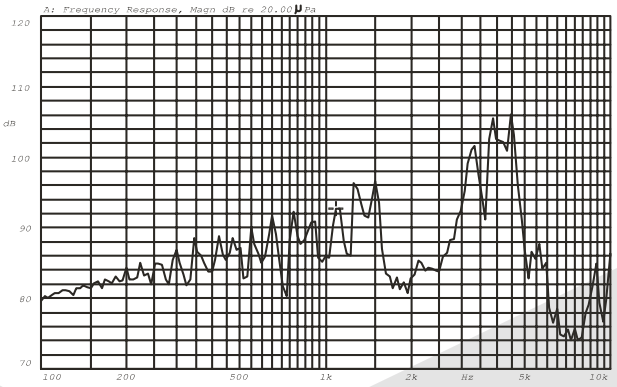

ORDER INFORMATION

Product No.: KLS3 - LPT - 35*8. 5

- KLS3 — Part Number
- LPT — Without Circuit Piezo Transducer Buzzer Series
- 35*8. 5 — Order Code

Piezo Transducer Series

KLS3-LPT-42∗16 Without Circuit Piezo Transducer Buzzer Series

Order Code	KLS3-LPT-42*16
Rated Voltage	12Vp-p
Operating Voltage	1…30Vp-p
Max. Rated Current	8mA
Resonant Frequency	1.1±0.5KHz
Min.S.P.L.（@10cm）	80dB
Capacitance at 1000Hz	35000±30% pF
Operating Temp	-20°C~+70°C
Weight	10g



Dimensions (Unit:mm)

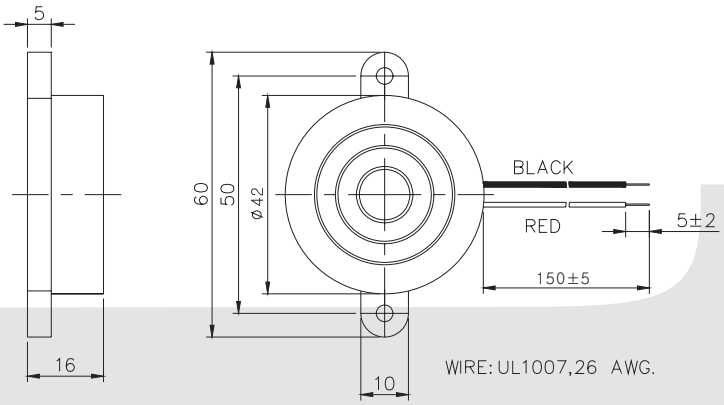

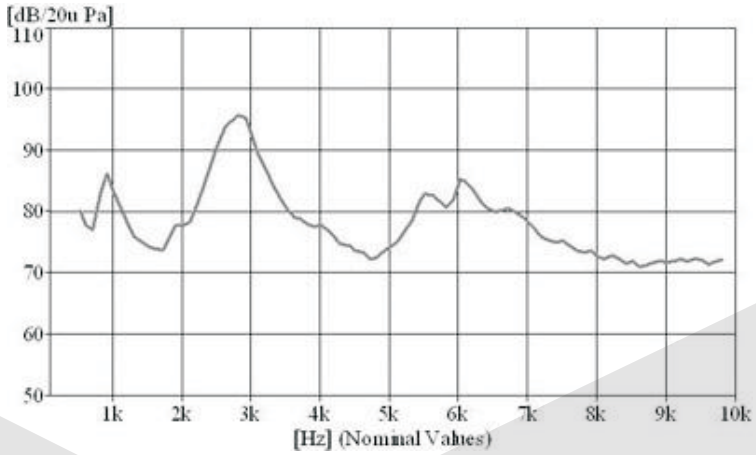

ORDER INFORMATION

Product No.: KLS3 - LPT - 42∗16

- KLS3 — Part Number
- LPT — Without Circuit Piezo Transducer Buzzer Series
- 42∗16 — Order Code

III

Piezo Buzzer Series

KLS3-PB-14*08 With Circuit Piezo Buzzer Series

Order Code	KLS3-PB-14*08-A	KLS3-PB-14*08-B
Rated Voltage	$5V_{DC}$	$12V_{DC}$
Operating Voltage	$3...9V_{DC}$	$1.5...16V_{DC}$
Max.Rated Current	8mA	8mA
Resonant Frequency	4.0±0.5KHz	4.0±0.5KHz
Min.S.P.L.(@10cm)	80dB	85dB
Tone Nature	Continuous	
Operating Temp	-20~+80°C	
Weight	1g	

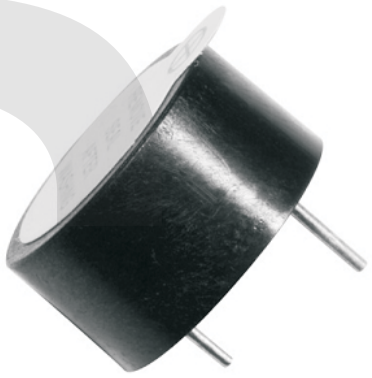

Dimensions (Unit:mm)

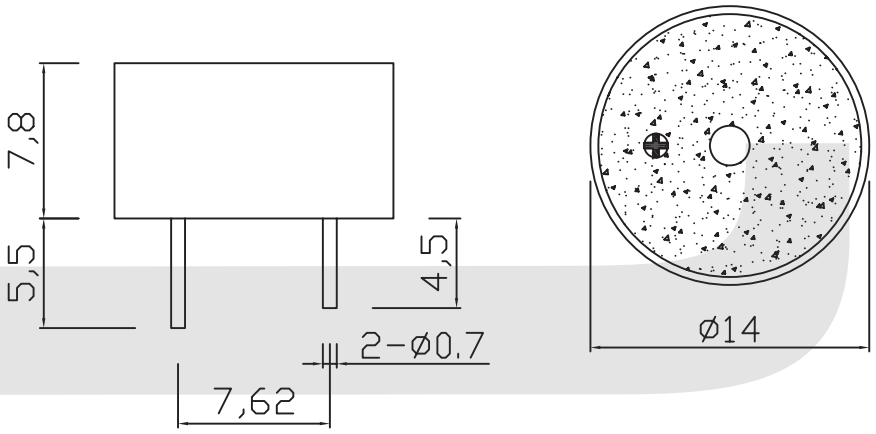

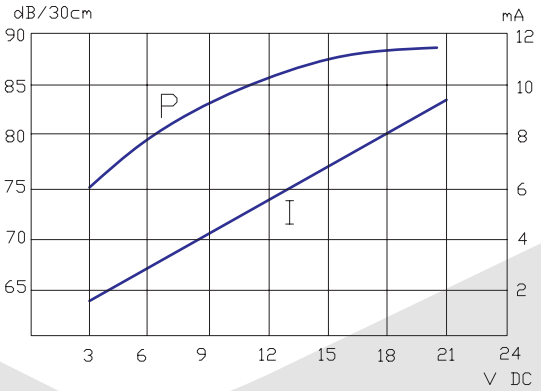

ORDER INFORMATION

Product NO.: KLS3- PB - 14*08-A

Part Number
Piezo Buzzer Series
Order Code

Piezo Buzzer Series

KLS3-PB-16∗14 With Circuit Piezo Buzzer Series

Order Code	KLS3-PB-16*14-A	KLS3-PB-16*14-B
Rated Voltage	$5V_{DC}$	$12V_{DC}$
Operating Voltage	$1…18V_{DC}$	$6…18V_{DC}$
Max.Rated Current	15mA	20mA
Resonant Frequency	4.0±0.5KHz	4.0±0.5KHz
Min.S.P.L.(@10cm)	80dB	85dB
Tone Nature	Continuous	
Operating Temp	-20~+80°C	
Weight	2g	

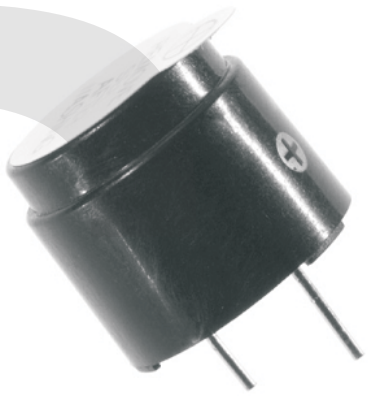

Dimensions (Unit:mm)

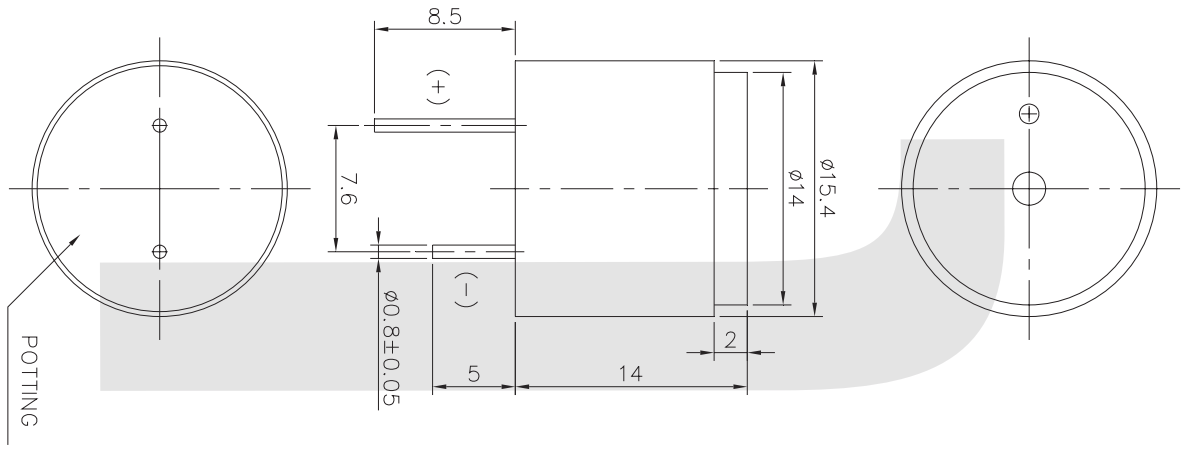

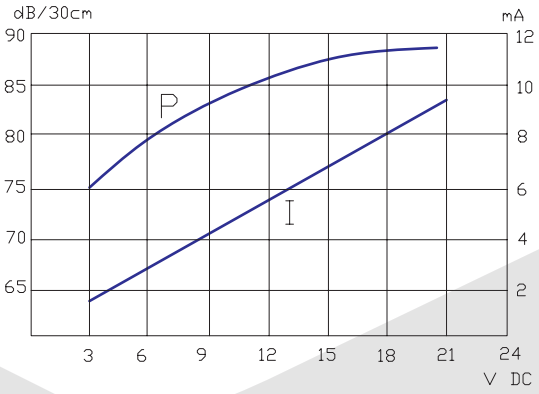

ORDER INFORMATION

Product NO.: KLS3- PB - 16∗14-A

Part Number
Piezo Buzzer Series
Order Code

III

Piezo Buzzer Series

KLS3-PB-23∗10 With Circuit Piezo Buzzer Series

Order Code	KLS3-PB-23*10-A	KLS3-PB-23*10-B
Rated Voltage	$12V_{DC}$	$24V_{DC}$
Operating Voltage	$3…24V_{DC}$	$12…36V_{DC}$
Max.Rated Current	12mA	12mA
Resonant Frequency	3.5±0.5KHz	3.5±0.5KHz
Min.S.P.L.(@10cm)	85dB	85dB
Tone Nature	Continuous	
Operating Temp	-20~+70°C	
Weight	4g	

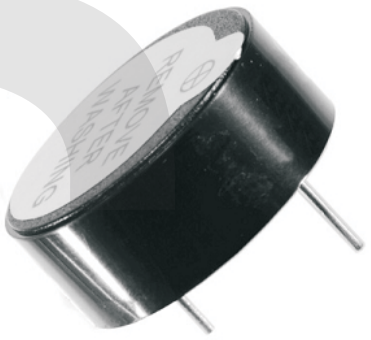

Dimensions (Unit:mm)

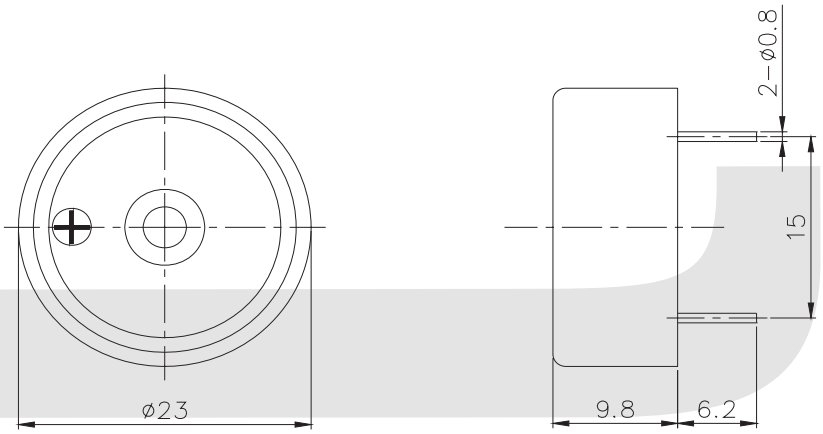

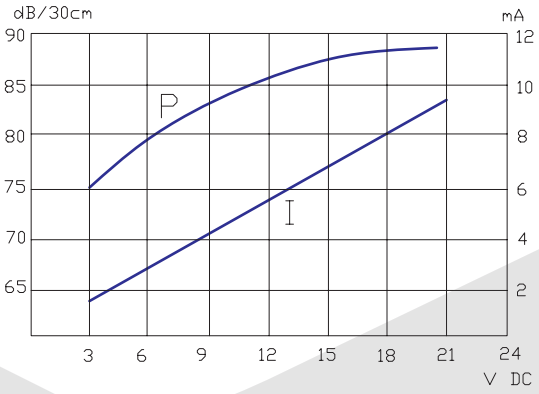

ORDER INFORMATION

Product NO.: KLS3- PB - 23∗10-A

Part Number
Piezo Buzzer Series
Order Code

III

Piezo Buzzer Series

KLS3-PB-23*16 With Circuit Piezo Buzzer Series

SPECIFICATION

Rated Voltage:	$12V_{DC}$
Operating Voltage:	$8\text{-}24V_{DC}$
Max.Rated Current:	15mA at $12V_{DC}$
Min.S.P.L. (@ 30cm):	88dB at $12V_{DC}$
Resonant Frequency:	3.3 ± 0.5KHz
Tone Nature:	Continuous
Operating Temp:	-20 ~ +80°C
Weight:	5g



Dimensions (Unit:mm)

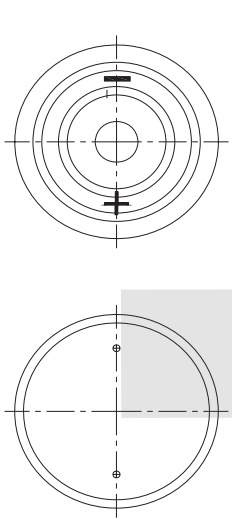

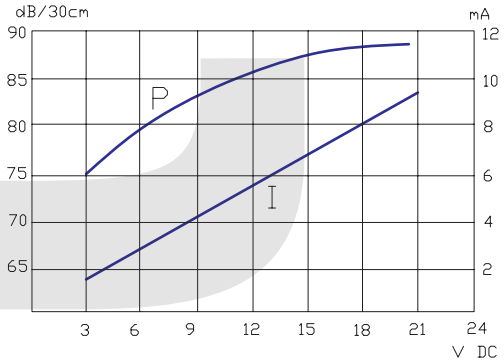

Order Code	Rated Voltage	Operating Voltage	Max.Rated Current	Min.S.P.L. (@30cm)	Resonant Frequency	Tone Nature	Operating Temp	Weight
KLS3-PB-23*16-A	$3V_{DC}$	$8\text{-}24V_{DC}$	25mA	80dB	3.4 ±0.5KHz			
KLS3-PB-23*16-B	$6V_{DC}$	$8\text{-}24V_{DC}$	20mA	82dB	3.4 ±0.5KHz			
KLS3-PB-23*16-C	$9V_{DC}$	$8\text{-}24V_{DC}$	15mA	88dB	3.3 ±0.5KHz	Continuous	-20~+80°C	5g
KLS3-PB-23*16-C	$12V_{DC}$	$8\text{-}24V_{DC}$	15mA	88dB	3.3 ±0.5KHz			
KLS3-PB-23*16-D	$24V_{DC}$	$8\text{-}24V_{DC}$	20mA	88dB	3.1 ±0.5KHz			

ORDER INFORMATION

Product NO.: KLS3- PB - 23*16-A

Part Number — KLS3-
Piezo Buzzer Series — PB
Order Code — 23*16-A

Piezo Buzzer Series

KLS3-PB-23*19 With Circuit Piezo Buzzer Series

SPECIFICATION

Rated Voltage:	$12V_{DC}$
Operating Voltage:	$8\text{-}24V_{DC}$
Max.Rated Current:	15mA at $12V_{DC}$
Min.S.P.L. (@ 30cm):	88dB at $12V_{DC}$
Resonant Frequency:	3.3 ± 0.5KHz
Tone Nature:	Continuous
Operating Temp:	-20 ~ +80°C
Weight:	5g



Dimensions (Unit:mm)

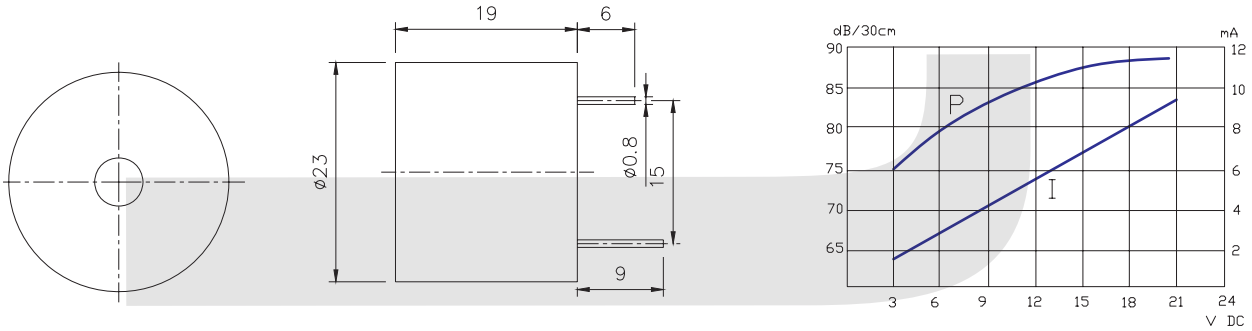

Order Code	Rated Voltage	Operating Voltage	Max.Rated Current	Min.S.P.L. (@30cm)	Resonant Frequency	Tone Nature	Operating Temp	Weight
KLS3-PB-23*19-A	$3V_{DC}$	$8\text{-}24V_{DC}$	25mA	80dB	3.4 ±0.5KHz	Continuous	-20~+80°C	5g
KLS3-PB-23*19-B	$6V_{DC}$	$8\text{-}24V_{DC}$	20mA	82dB	3.4 ±0.5KHz			
KLS3-PB-23*19-C	$9V_{DC}$	$8\text{-}24V_{DC}$	15mA	88dB	3.3 ±0.5KHz			
KLS3-PB-23*19-C	$12V_{DC}$	$8\text{-}24V_{DC}$	15mA	88dB	3.3 ±0.5KHz			
KLS3-PB-23*19-D	$24V_{DC}$	$8\text{-}24V_{DC}$	20mA	88dB	3.1 ±0.5KHz			

ORDER INFORMATION

Product NO.: KLS3- PB - 23*19-A

Part Number
Piezo Buzzer Series
Order Code

Piezo Buzzer Series

KLS3-PB-24*11 With Circuit Piezo Buzzer Series

SPECIFICATION

Rated Voltage:	$10V_{DC}$
Operating Voltage:	$3\text{-}18V_{DC}$
Max.Rated Current:	15mA at $10V_{DC}$
Min.S.P.L.(@60cm):	90dB at $10V_{DC}$
Resonant Frequency:	3.5 ±0.5KHz
Operating Temp:	-20~+70°C
Weight:	4g



Dimensions (Unit:mm)

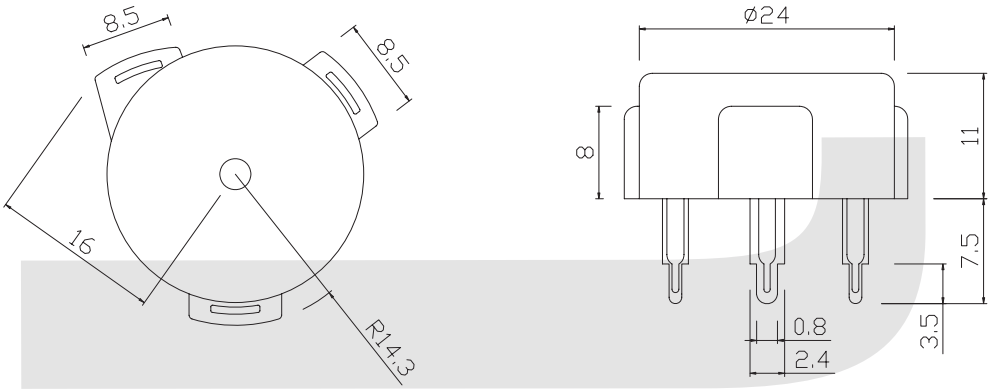

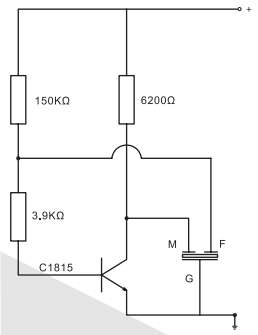

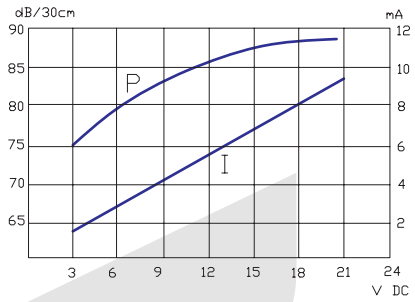

ORDER INFORMATION

Product NO.: KLS3- PB - 24*11

Part Number
Piezo Buzzer Series
Order Code

Piezo Buzzer Series

KLS3-PB-28*11 With Circuit Piezo Buzzer Series

SPECIFICATION

Rated Voltage:	$12V_{DC}$
Operating Voltage:	$3\text{-}28V_{DC}$
Max.Rated Current:	30mA at $12V_{DC}$
Min.S.P.L.(@60cm):	80dB at $12V_{DC}$
Resonant Frequency:	3.0 ±0.5KHz
Tone Nature:	Continuous
Operating Temp:	-20~+70°C
Weight:	4g



Dimensions (Unit:mm)

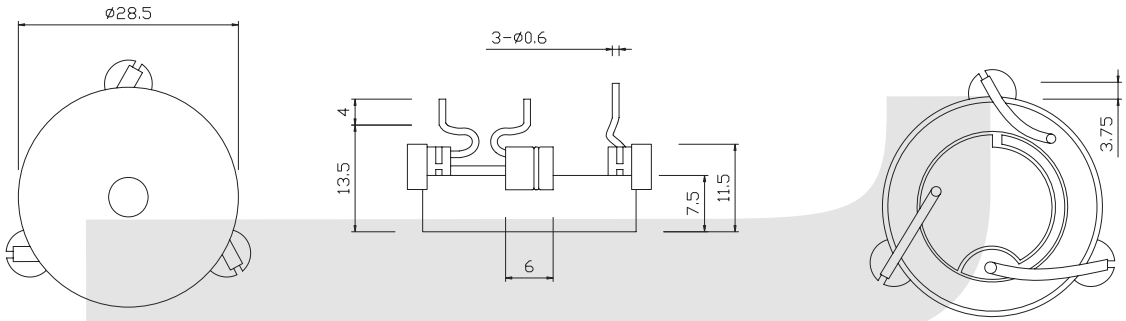

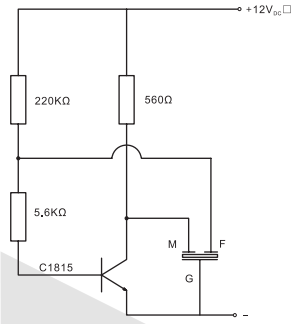

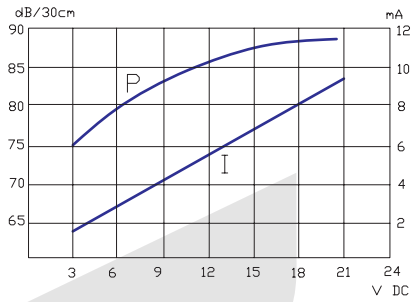

ORDER INFORMATION

Product NO.: KLS3- PB - 28*11

Part Number — KLS3-
Piezo Buzzer Series — PB
Order Code — 28*11

Piezo Buzzer Series

KLS3-PB-30*15 With Circuit Piezo Buzzer Series

SPECIFICATION

Rated Voltage:	$12V_{DC}$
Operating Voltage:	$3\text{-}20V_{DC}$
Max.Rated Current:	10mA at $12V_{DC}$
Min.S.P.L. (@ 30cm):	90dB at $12V_{DC}$
Resonant Frequency:	2.9 ± 0.5KHz
Tone Nature:	Continuous
Operating Temp:	-20 ~ +70°C
Weight:	7g

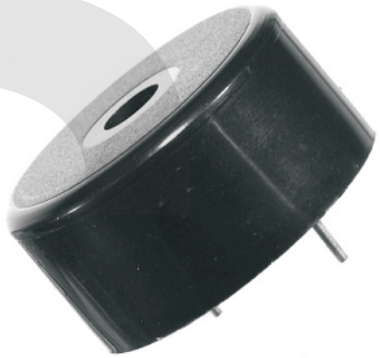

Dimensions (Unit:mm)

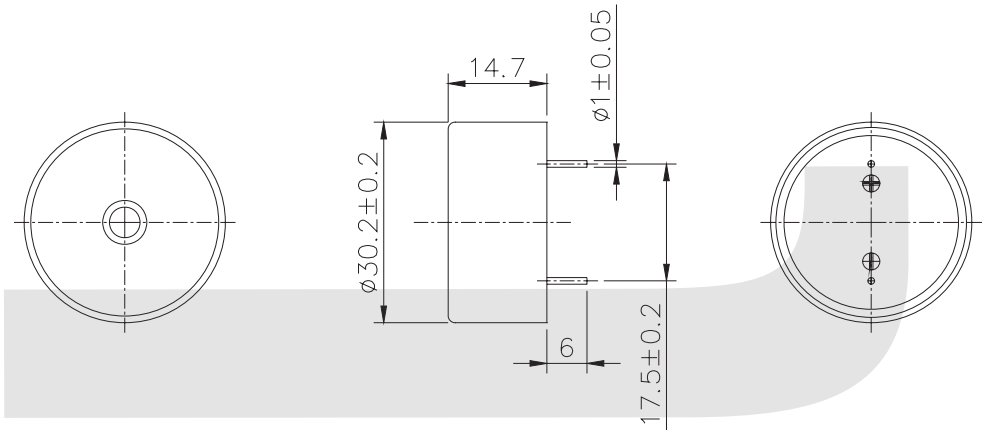

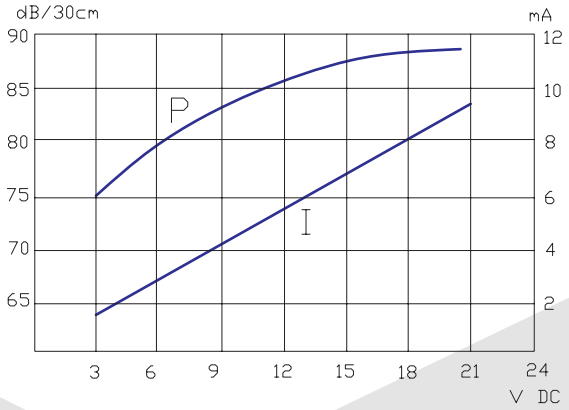

ORDER INFORMATION

Product NO.: KLS3- PB - 30*15

Part Number
Piezo Buzzer Series

Order Code

Piezo Buzzer Series

KLS3-PB-30*20 With Circuit Piezo Buzzer Series

Order Code	KLS3-PB-30*20
Rated Voltage	12VDC
Operating Voltage	3-20VDC
Max.Rated Current	15mA at 12VDC
Min.S.P.L.(@30cm)	80dB at 12VDC
Resonant Frequency	3.5 ±0.5KHz
Tone Nature	Continuous+Pulse
Operating Temp	-20~+80°C
Weight	6g

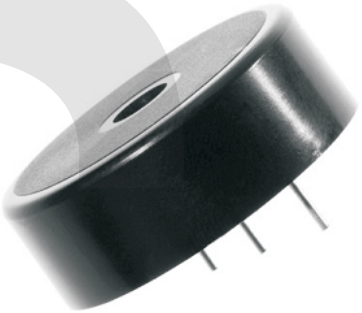

Dimensions (Unit:mm)

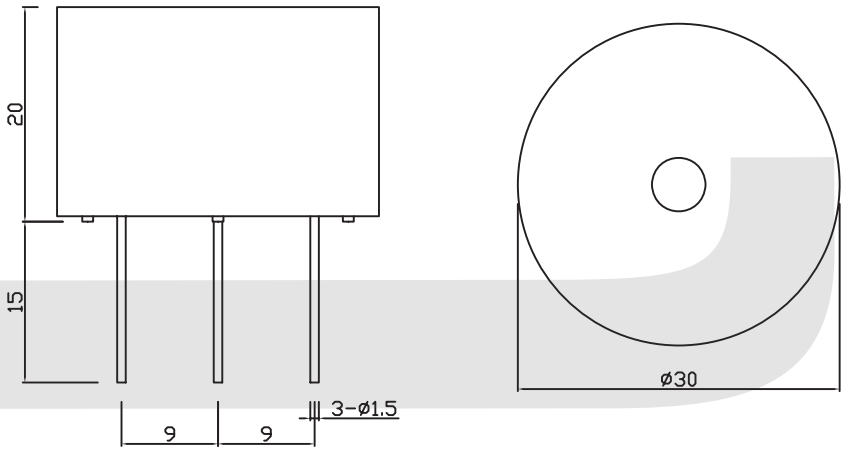

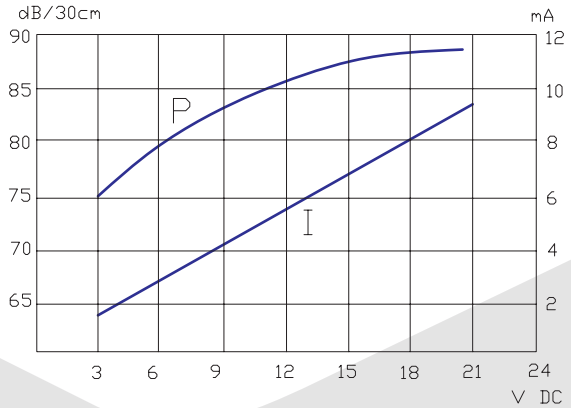

ORDER INFORMATION

Product NO.: KLS3- PB - 30*20

Part Number
Piezo Buzzer Series
Order Code

Piezo Buzzer Series

KLS3-PB-43∗14 With Circuit Piezo Buzzer Series

Order Code	KLS3-PB-43*14
Rated Voltage	12V_{DC}
Operating Voltage	3-20V_{DC}
Max.Rated Current	15mA
Min.S.P.L.(@30cm)	100dB
Resonant Frequency	2.9 ±0.5KHz
Tone Nature	Continuous
Operating Temp	-20~+60°C
Weight	11g



Dimensions (Unit:mm)

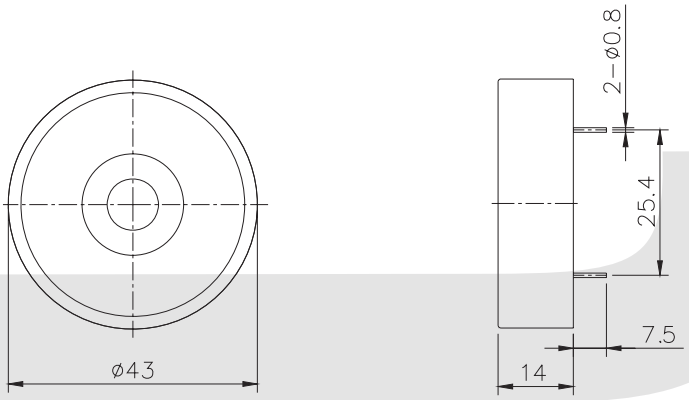

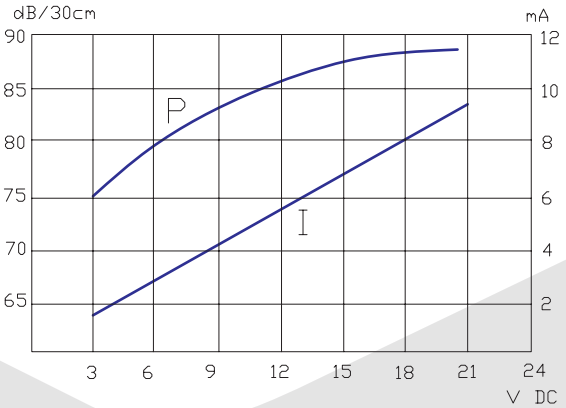

ORDER INFORMATION

Product NO.: KLS3- PB - 43∗14

Part Number
Piezo Buzzer Series
Order Code

III

Piezo Buzzer Series

KLS3-PB-43*33A With Circuit Piezo Buzzer Series

SPECIFICATION

Rated Voltage:	$12V_{DC}$
Operating Voltage:	$6\text{-}28V_{DC}$
Max.Rated Current:	20mA at $12V_{DC}$
Min.S.P.L.(@60cm):	80dB at $12V_{DC}$
Resonant Frequency:	2.9 ±0.5KHz
Tone Nature:	Continuous
Operating Temp:	-20~+80°C
Weight:	40g



Dimensions (Unit:mm)

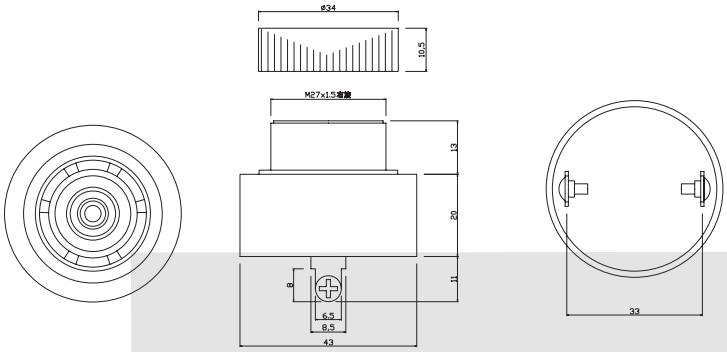

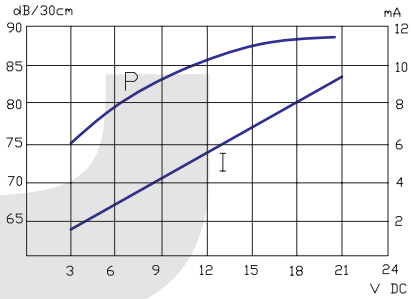

Order Code	Rated Voltage	Operating Voltage	Max.Rated Current	Min.S.P.L. (@60cm)	Resonant Frequency	Tone Nature	Operating Temp	Weight
KLS3-PB-43*33A-A1	$12V_{DC}$	$6\text{-}28V_{DC}$	20mA	80dB	2.9 ±0.5KHz	Continuous	-20~+80°C	40g
KLS3-PB-43*33A-A2	$12V_{DC}$	$6\text{-}28V_{DC}$	20mA	80dB	2.9 ±0.5KHz	Slow Pulse		
KLS3-PB-43*33A-A3	$12V_{DC}$	$6\text{-}28V_{DC}$	20mA	80dB	2.9 ±0.5KHz	Fast Pulse		
KLS3-PB-43*33A-A4	$12V_{DC}$	$6\text{-}28V_{DC}$	20mA	80dB	2.9 ±0.5KHz	Slow Pulse		
KLS3-PB-43*33A-A5	$12V_{DC}$	$6\text{-}28V_{DC}$	20mA	80dB	2.9 ±0.5KHz	Fast Pulse		
KLS3-PB-43*33A-B1	$230V_{AC}$	$200\sim 240V_{AC}$		80dB	2.9 ±0.5KHz	Continuous		
KLS3-PB-43*33A-B2	$230V_{AC}$	$200\sim 240V_{AC}$		80dB	2.9 ±0.5KHz	Fast Pulse		
KLS3-PB-43*33A-B3	$230V_{AC}$	$200\sim 240V_{AC}$		80dB	2.9 ±0.5KHz	Slow Pulse		

ORDER INFORMATION

Product NO.: KLS3- PB - 43*33A-A1

Part Number
Piezo Buzzer Series

Order Code

Piezo Buzzer Series

KLS3-PB-43*33B With Circuit Piezo Buzzer Series

SPECIFICATION

Rated Voltage:	$12V_{DC}$
Operating Voltage:	$6\text{-}28V_{DC}$
Max.Rated Current:	20mA at $12V_{DC}$
Min.S.P.L.(@60cm):	80dB at $12V_{DC}$
Resonant Frequency:	2.9 ±0.5KHz
Tone Nature:	Continuous
Operating Temp:	-20~+80°C
Weight:	40g



Dimensions (Unit:mm)

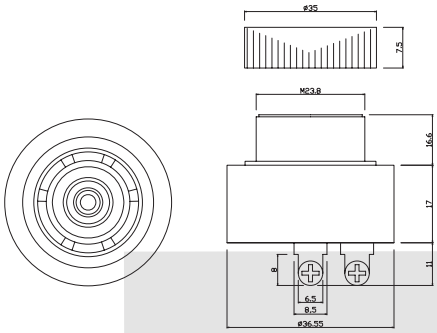

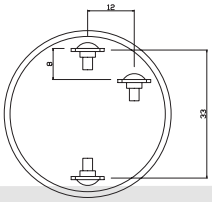

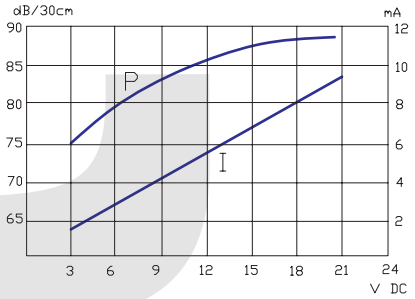

Order Code	Rated Voltage	Operating Voltage	Max.Rated Current	Min.S.P.L. (@60cm)	Resonant Frequency	Tone Nature	Operating Temp	Weight
KLS3-PB-43*33B-A1	$12V_{DC}$	$6\text{-}28V_{DC}$	20mA	80dB	2.9 ±0.5KHz	Continuous	-20~+80°C	40g
KLS3-PB-43*33B-A2	$12V_{DC}$	$6\text{-}28V_{DC}$	20mA	80dB	2.9 ±0.5KHz	Slow Pulse		
KLS3-PB-43*33B-A3	$12V_{DC}$	$6\text{-}28V_{DC}$	20mA	80dB	2.9 ±0.5KHz	Fast Pulse		
KLS3-PB-43*33B-A4	$12V_{DC}$	$6\text{-}28V_{DC}$	20mA	80dB	2.9 ±0.5KHz	Slow Pulse		
KLS3-PB-43*33B-A5	$12V_{DC}$	$6\text{-}28V_{DC}$	20mA	80dB	2.9 ±0.5KHz	Fast Pulse		
KLS3-PB-43*33B-B1	$230V_{AC}$	$200\sim240V_{AC}$		80dB	2.9 ±0.5KHz	Continuous		
KLS3-PB-43*33B-B2	$230V_{AC}$	$200\sim240V_{AC}$		80dB	2.9 ±0.5KHz	Fast Pulse		
KLS3-PB-43*33B-B3	$230V_{AC}$	$200\sim240V_{AC}$		80dB	2.9 ±0.5KHz	Slow Pulse		

ORDER INFORMATION

Product NO.: KLS3- PB - 43*33B-A1

Part Number
Piezo Buzzer Series
Order Code

Piezo Buzzer Series

KLS3-PB-43*33C With Circuit Piezo Buzzer Series

SPECIFICATION

Rated Voltage:	$12V_{DC}$
Operating Voltage:	$6\text{-}28V_{DC}$
Max.Rated Current:	20mA at $12V_{DC}$
Min.S.P.L.(@60cm):	80dB at $12V_{DC}$
Resonant Frequency:	2.9 ±0.5KHz
Tone Nature:	Continuous
Operating Temp:	-20~+80°C
Weight:	36g



Dimensions (Unit:mm)

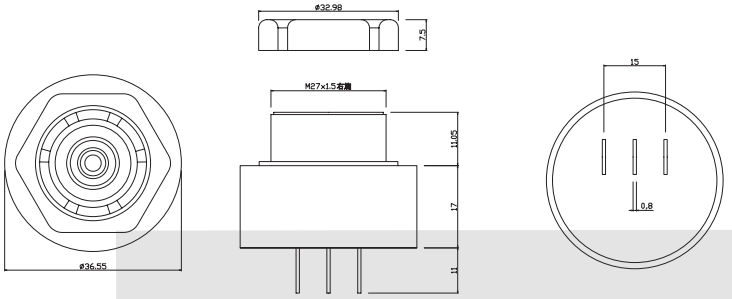

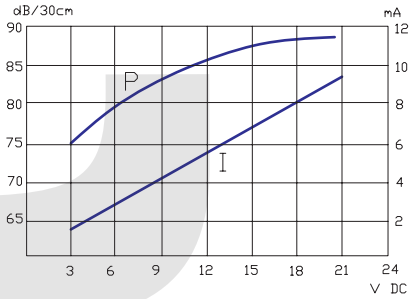

Order Code	Rated Voltage	Operating Voltage	Max.Rated Current	Min.S.P.L. (@60cm)	Resonant Frequency	Tone Nature	Operating Temp	Weight
KLS3-PB-43*33C-A1	$12V_{DC}$	$6\text{-}28V_{DC}$	20mA	80dB	2.9 ±0.5KHz	Continuous	-20~+80°C	36g
KLS3-PB-43*33C-A2	$12V_{DC}$	$6\text{-}28V_{DC}$	20mA	80dB	2.9 ±0.5KHz	Slow Pulse		
KLS3-PB-43*33C-A3	$12V_{DC}$	$6\text{-}28V_{DC}$	20mA	80dB	2.9 ±0.5KHz	Fast Pulse		
KLS3-PB-43*33C-A4	$12V_{DC}$	$6\text{-}28V_{DC}$	20mA	80dB	2.9 ±0.5KHz	Continuous +Slow Pulse		
KLS3-PB-43*33C-A5	$12V_{DC}$	$6\text{-}28V_{DC}$	20mA	80dB	2.9 ±0.5KHz	Continuous +Fast Pulse		
KLS3-PB-43*33C-B1	$230V_{AC}$	$200\sim 240V_{AC}$		80dB	2.9 ±0.5KHz	Continuous		
KLS3-PB-43*33C-B2	$230V_{AC}$	$200\sim 240V_{AC}$		80dB	2.9 ±0.5KHz	Fast Pulse		
KLS3-PB-43*33C-B3	$230V_{AC}$	$200\sim 240V_{AC}$		80dB	2.9 ±0.5KHz	Slow Pulse		

ORDER INFORMATION

Product NO.: KLS3- PB - 43*33C-A1

Part Number
Piezo Buzzer Series
Order Code

III

Piezo Buzzer Series

KLS3-PB-43*33D With Circuit Piezo Buzzer Series

SPECIFICATION

Rated Voltage:	$12V_{DC}$
Operating Voltage:	$6\text{-}28V_{DC}$
Max.Rated Current:	20mA at $12V_{DC}$
Min.S.P.L.(@60cm):	80dB at $12V_{DC}$
Resonant Frequency:	2.9 ±0.5KHz
Tone Nature:	Continuous
Operating Temp:	-20~+80°C
Weight:	36g



Dimensions (Unit:mm)

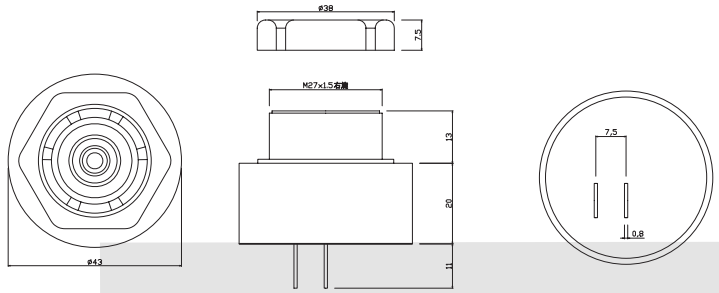

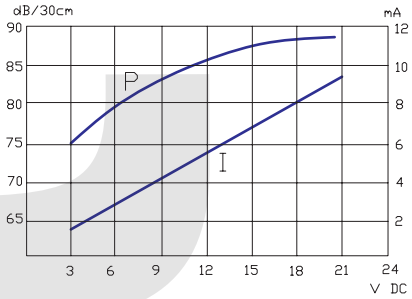

Order Code	Rated Voltage	Operating Voltage	Max.Rated Current	Min.S.P.L. (@60cm)	Resonant Frequency	Tone Nature	Operating Temp	Weight
KLS3-PB-43*33D-A1	$12V_{DC}$	$6\text{-}28V_{DC}$	20mA	80dB	2.9 ±0.5KHz	Continuous	-20~+80°C	36g
KLS3-PB-43*33D-A2	$12V_{DC}$	$6\text{-}28V_{DC}$	20mA	80dB	2.9 ±0.5KHz	Slow Pulse		
KLS3-PB-43*33D-A3	$12V_{DC}$	$6\text{-}28V_{DC}$	20mA	80dB	2.9 ±0.5KHz	Fast Pulse		
KLS3-PB-43*33D-A4	$12V_{DC}$	$6\text{-}28V_{DC}$	20mA	80dB	2.9 ±0.5KHz	Continuous +Slow Pulse		
KLS3-PB-43*33D-A5	$12V_{DC}$	$6\text{-}28V_{DC}$	20mA	80dB	2.9 ±0.5KHz	Continuous +Fast Pulse		
KLS3-PB-43*33D-B1	$230V_{AC}$	$200\sim 240V_{AC}$		80dB	2.9 ±0.5KHz	Continuous		
KLS3-PB-43*33D-B2	$230V_{AC}$	$200\sim 240V_{AC}$		80dB	2.9 ±0.5KHz	Fast Pulse		
KLS3-PB-43*33D-B3	$230V_{AC}$	$200\sim 240V_{AC}$		80dB	2.9 ±0.5KHz	Slow Pulse		

ORDER INFORMATION

Product NO.: KLS3- PB - 43*33D-A1

Part Number
Piezo Buzzer Series
Order Code

Piezo Buzzer Series

KLS3-LPB-23*10 With Circuit Piezo Buzzer Series

SPECIFICATION

Rated Voltage:	$12V_{DC}$
Operating Voltage:	$3\text{-}24V_{DC}$
Max.Rated Current:	10mA at $12V_{DC}$
Min.S.P.L.(@30cm):	85dB at $12V_{DC}$
Resonant Frequency:	3.5 ±0.5KHz
Tone Nature:	Continuous
Operating Temp:	-20~+60°C
Weight:	3.5g



Dimensions (Unit:mm)

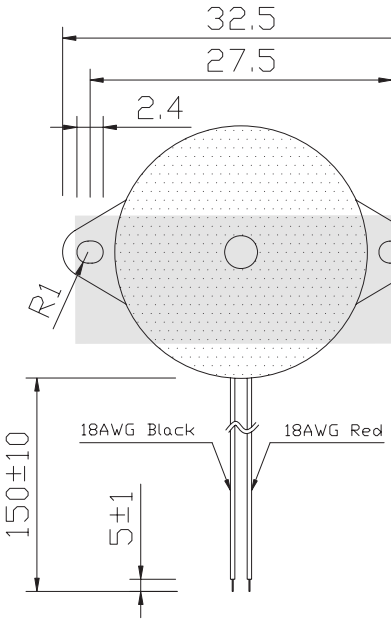

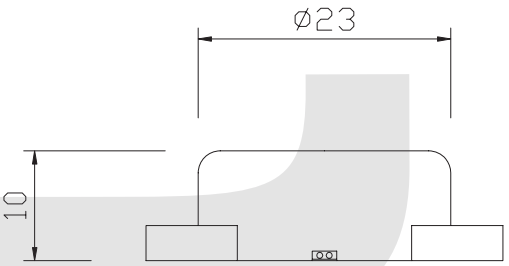

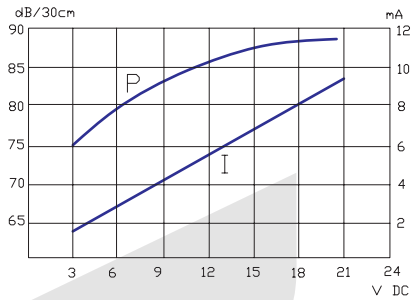

ORDER INFORMATION

Product NO.: KLS3- LPB - 23*10

Part Number
Piezo Buzzer Series
Order Code

Piezo Buzzer Series

KLS3-LPB-23*19 With Circuit Piezo Buzzer Series

SPECIFICATION

Rated Voltage:	$12V_{DC}$
Operating Voltage:	$8\text{-}15V_{DC}$
Max.Rated Current:	15mA at $12V_{DC}$
Min.S.P.L.(@30cm):	88dB at $12V_{DC}$
Resonant Frequency:	3.3 ±0.5KHz
Tone Nature:	Continuous
Operating Temp:	-20~+80°C
Weight:	8g



Dimensions (Unit:mm)

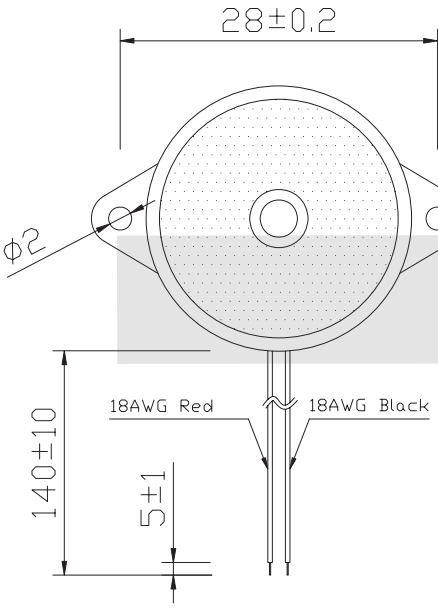

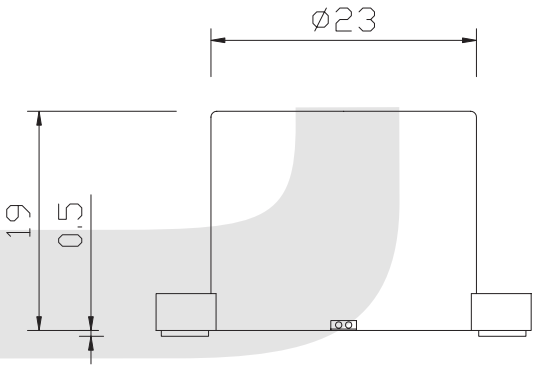

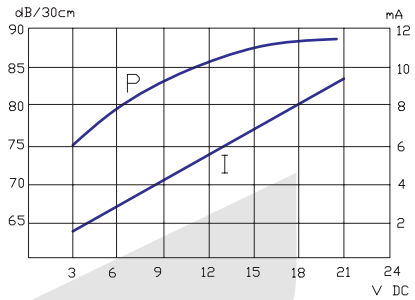

ORDER INFORMATION

Product NO.: KLS3- LPB - 23*19

Part Number
Piezo Buzzer Series
Order Code

III

Piezo Buzzer Series

KLS3-LPB-30*25 With Circuit Piezo Buzzer Series

Order Code	KLS3-LPB-30*25-A1	KLS3-LPB-30*25-A2	KLS3-LPB-30*25-A3
Rated Voltage	$12V_{DC}$	$12V_{DC}$	$12V_{DC}$
Operating Voltage	$3…24V_{DC}$	$3…24V_{DC}$	$3…24V_{DC}$
Max.Rated Current	15mA	15mA	15mA
Resonant Frequency	3.7±0.5KHz	3.7±0.5KHz	3.7±0.5KHz
Min.S.P.L.(@30cm)	90dB	85dB	85dB
Tone Nature	Continuous	Fast Pulse	Slow Pulse
Operating Temp		-20~+60°C	
Weight		15g	



Dimensions (Unit:mm)

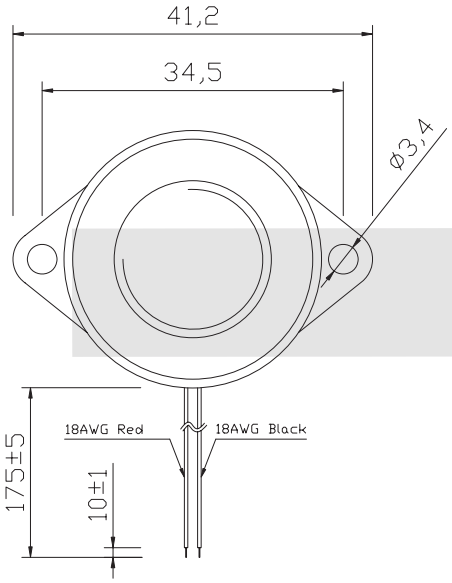

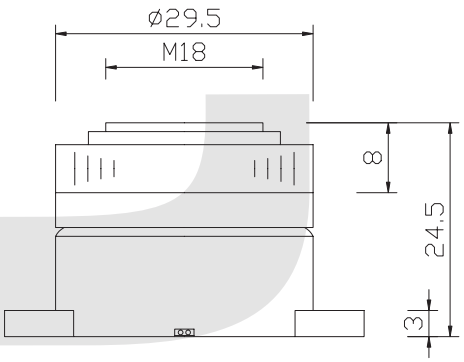

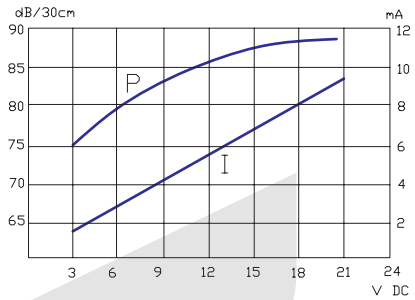

ORDER INFORMATION

Product NO.: KLS3- LPB - 30*25

Part Number
Piezo Buzzer Series

Order Code

Piezo Buzzer Series

KLS3-LPB-32*15 With Circuit Piezo Buzzer Series

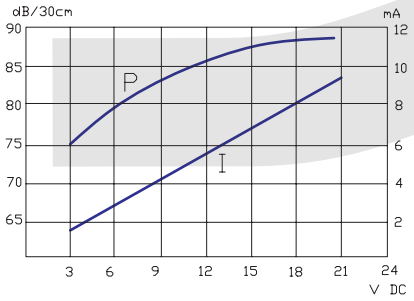



Dimensions (Unit:mm)

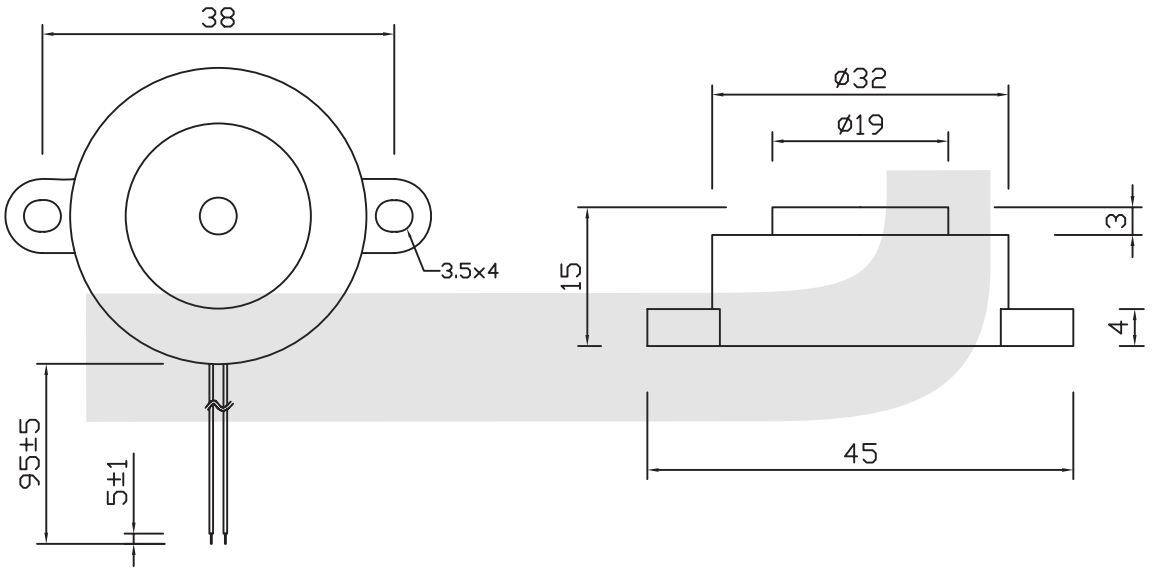

Order Code	Rated Voltage	Operating Voltage	Max.Rated Current	Min.S.P.L. (@30cm)	Resonant Frequency	Tone Nature	Operating Temp	Weight
KLS3-LPB-32*15-A1	$12V_{DC}$	$3\text{-}24V_{DC}$	15mA	90dB	3.7 ±0.5KHz	Continuous	-20~+60°C	8g
KLS3-LPB-32*15-A2	$12V_{DC}$	$3\text{-}24V_{DC}$	15mA	85dB	3.9 ±0.5KHz	Pulse		
KLS3-LPB-32*15-B	$6V_{DC}$	$3\text{-}24V_{DC}$		85dB	4.2 ±0.5KHz	Continuous		
KLS3-LPB-32*15-C	$24V_{DC}$	$3\text{-}24V_{DC}$		90dB	3.2 ±0.5KHz	Continuous		

ORDER INFORMATION

Product NO.: KLS3- LPB - 32*15

Part Number
Piezo Buzzer Series

Order Code

SMT Buzzer Series

KLS3-SMT-10*05 9. 6*9. 6*5. 0mm SMT Buzzer Series

SPECIFICATIONS

Rated Voltage	$5V_{DC}$
Operating Voltage	$4\text{-}7V_{DC}$
Max.Rated Current	30mA
Min.S.P.L. (@ 10cm)	MIN. 85 at Rated Voltage at 10cm
Tone/Pulse Rate	Constant
Resonant Frequency	2700 ± 0. 3Hz
Operating Temp	-20 ~ +70 ° C
Weight	1. 5g



Dimensions (Unit:mm)

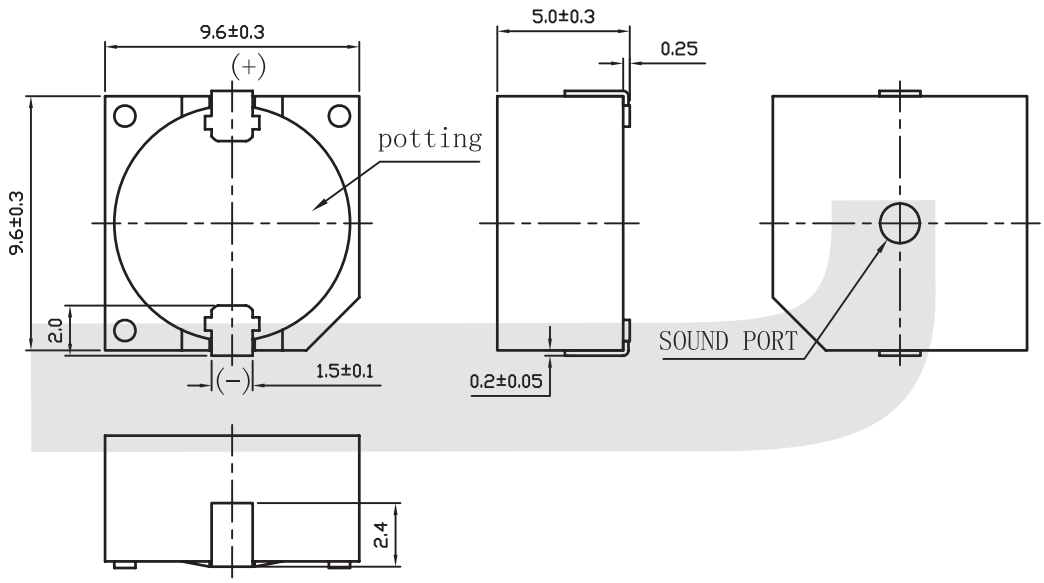

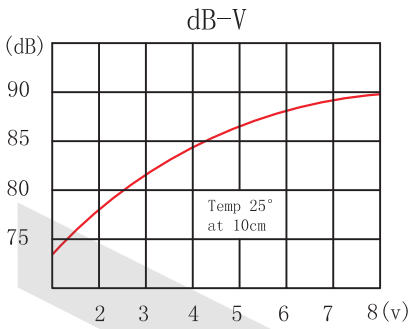

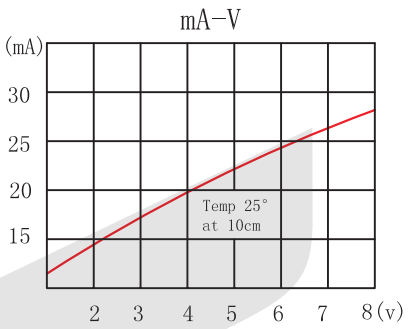

ORDER INFORMATION

Product NO.: KLS3-SMT - 10*05

Part Number
SMT Buzzer Series
Size specifications

SMT Buzzer Series

KLS3-SMT-13*07A SMT Buzzer Series

SPECIFICATIONS

Rated Voltage	$5V_{DC}$
Operating Voltage	$4\text{-}7V_{DC}$
Max.Rated Current	40mA
Min.S.P.L. (@ 10cm)	85dB
Resonant Frequency	2. 4 ± 0. 3KHz
Operating Temp	-20 ~ +70 ° C
Tone Nature	Continuous
Weight	2g



Dimensions (Unit:mm)

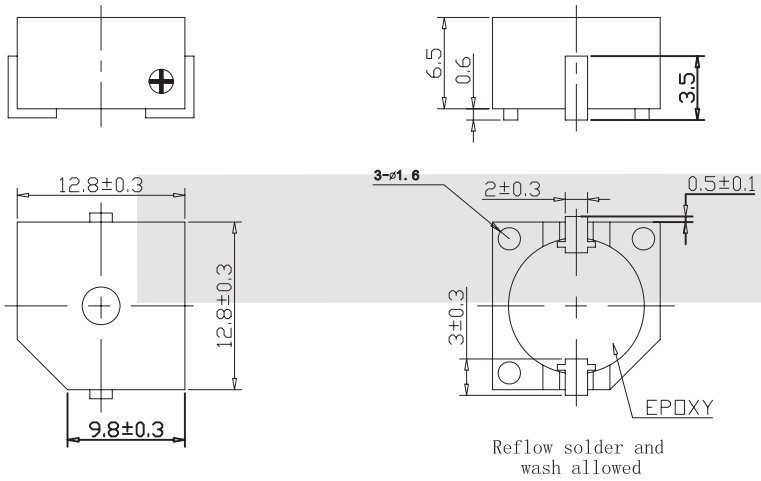

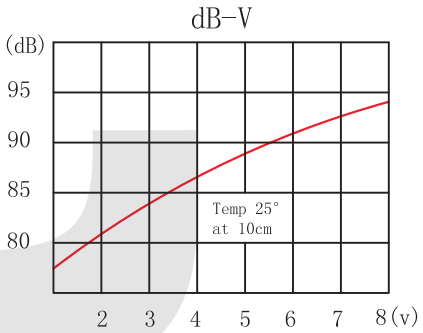

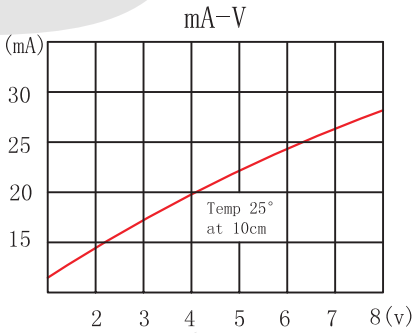

Order Code	Rated Voltage	Min.S.P.L. (@10cm)	Operating Voltage	SIZE mm
KLS3-SMT-13*07A	$5V_{DC}$	80dB	$4\text{-}7V_{DC}$	12.8 x 12.8 x 7.0
KLS3-SMT-13*10A	$5V_{DC}$	87dB	$4\text{-}7V_{DC}$	12.8 x 12.8 x 10.0
KLS3-SMT-13*11A	$12V_{DC}$	90dB	$8\text{-}16V_{DC}$	12.8 x 12.8 x 11.0

ORDER INFORMATION

Product NO.: KLS3-SMT - 13*07A

Part Number
SMT Buzzer Series
Size specifications

SMT Buzzer Series

KLS3-SMT-05*02 5*5*2mm SMT Transducer Buzzer Series

SPECIFICATIONS

Rated Voltage	3. $0V_{O-P}$
Operating Voltage	2-$4V_{O-P}$
Max.Rated Current	110mA
Min.S.P.L. (@ 10cm)	MIN. 75dB at Rated Voltage at 10cm
Coil Resistance(Ω)	12±3Ω
Resonant Frequency	4000Hz
Operating Temp	-20 ~ +70 ° C
Weight	0. 5g



Dimensions (Unit:mm)

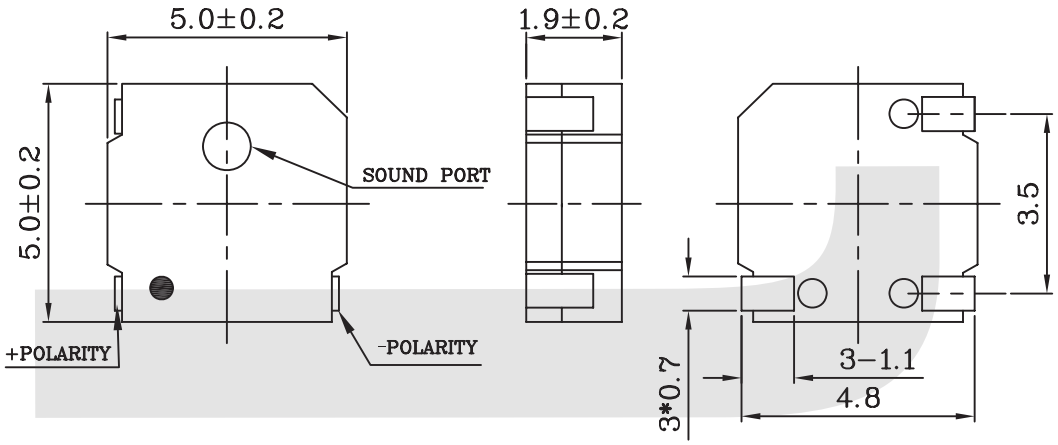

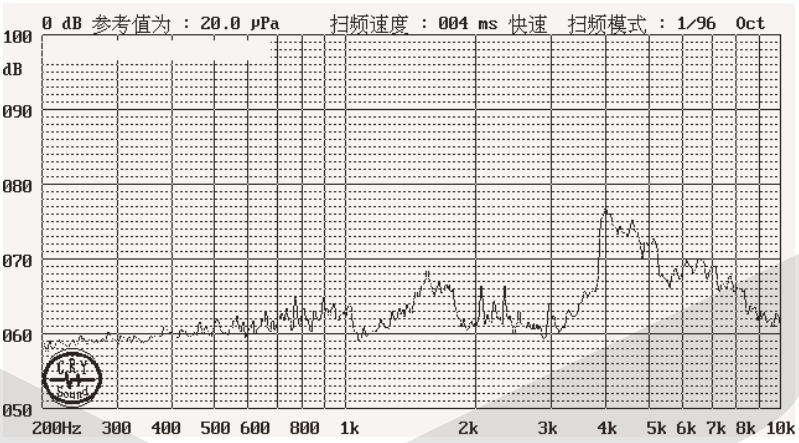

ORDER INFORMATION

Product NO.: KLS3-SMT - 05*02

Part Number
SMT Buzzer Series
Size specifications

SMT Buzzer Series

KLS3-SMT-05*2. 5　5*5*2. 5mm SMT Transducer Buzzer Series

SPECIFICATIONS

Rated Voltage	3. 0V_{O-P}
Operating Voltage	2-4V_{O-P}
Max.Rated Current	110mA
Min.S.P.L. (@ 10cm)	MIN. 75dB　at Rated Voltage at 10cm
Coil Resistance(Ω)	12±3Ω
Resonant Frequency	4000Hz
Operating Temp	-20 ~ +70 ° C
Weight	0. 5g

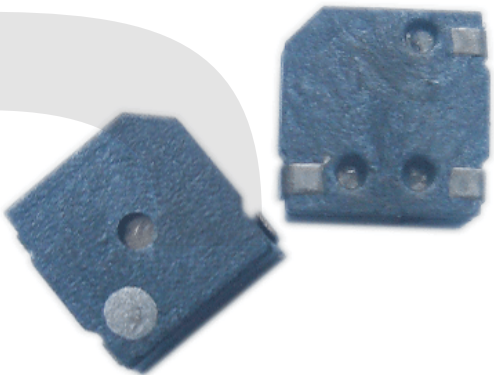

Dimensions (Unit:mm)

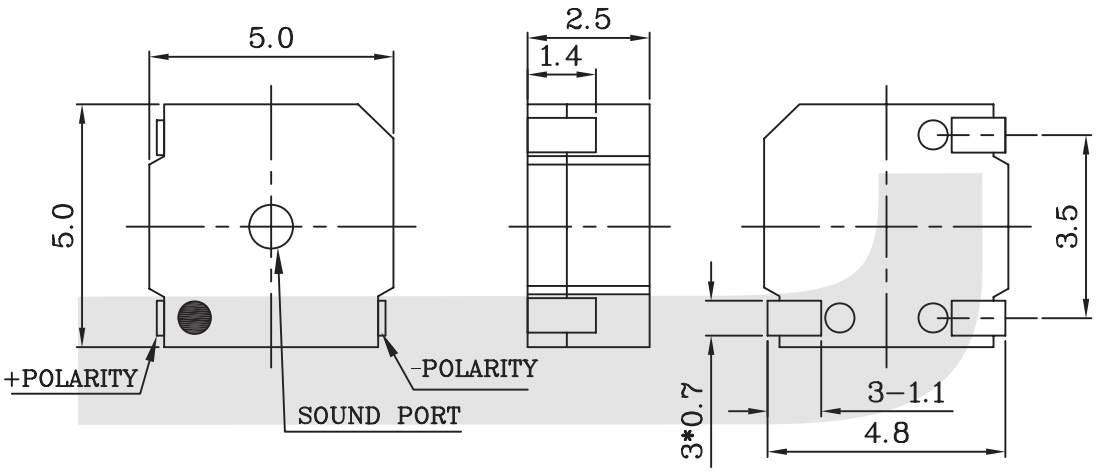

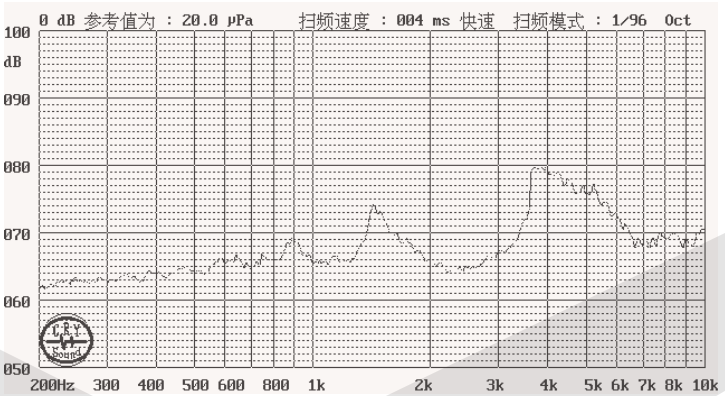

ORDER INFORMATION

Product NO.: KLS3-SMT - 05*2. 5

Part Number
SMT Buzzer Series
Size specifications

SMT Buzzer Series

KLS3-SMT-05*2. 7　5*5*2. 7mm SMT Transducer Buzzer Series

SPECIFICATIONS

Rated Voltage	3. 0V_{O-P}
Operating Voltage	2-4V_{O-P}
Max.Rated Current	110mA
Min.S.P.L. (@ 10cm)	MIN. 78dB　at Rated Voltage at 10cm
Coil Resistance(Ω)	12±3Ω
Resonant Frequency	4000Hz
Operating Temp	-20 ~ +70 ° C
Weight	0. 5g



Dimensions (Unit:mm)

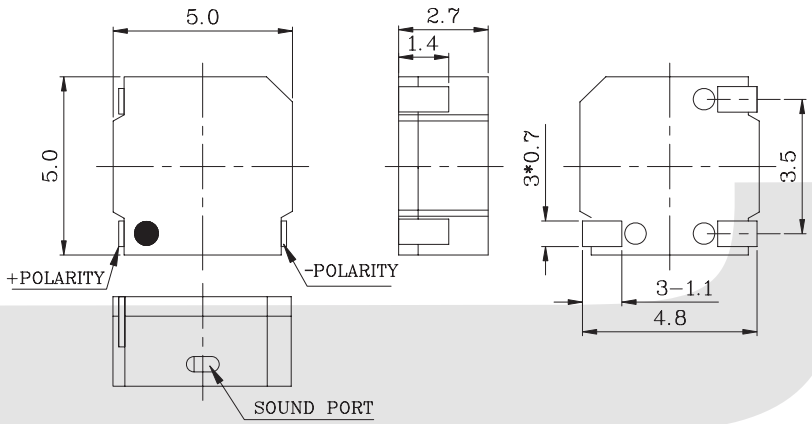

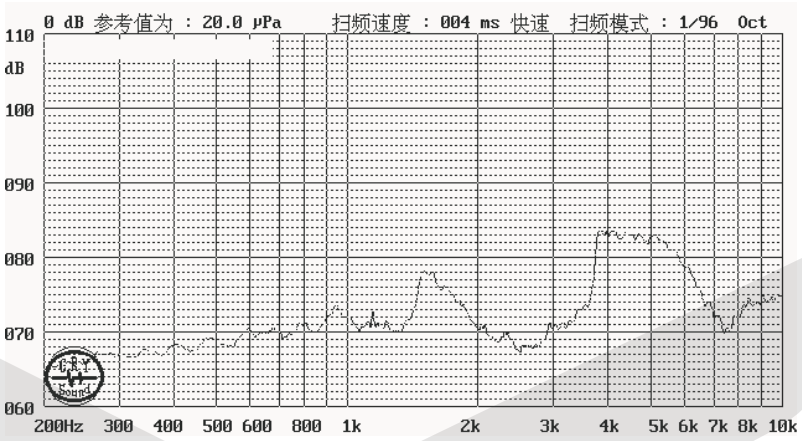

ORDER INFORMATION

Product NO.: KLS3-SMT - 05*2. 7

Part Number
SMT Buzzer Series
Size specifications

SMT Buzzer Series

KLS3-SMT-05*03 5*5*3mm SMT Transducer Buzzer Series

SPECIFICATIONS

Rated Voltage	3. 0V_{O-P}
Operating Voltage	2-4V_{O-P}
Max.Rated Current	110mA
Min.S.P.L. (@ 10cm)	MIN. 80dB at Rated Voltage at 10cm
Coil Resistance(Ω)	12±3Ω
Resonant Frequency	4000Hz
Operating Temp	-20 ~ +70 ° C
Weight	0. 5g

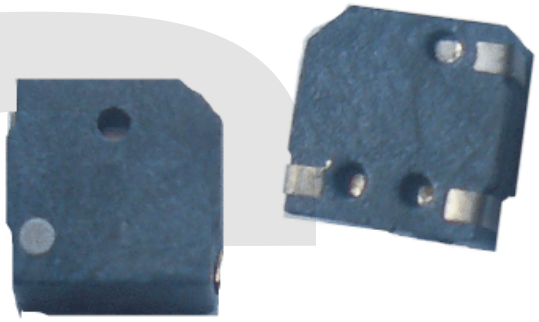

Dimensions (Unit:mm)

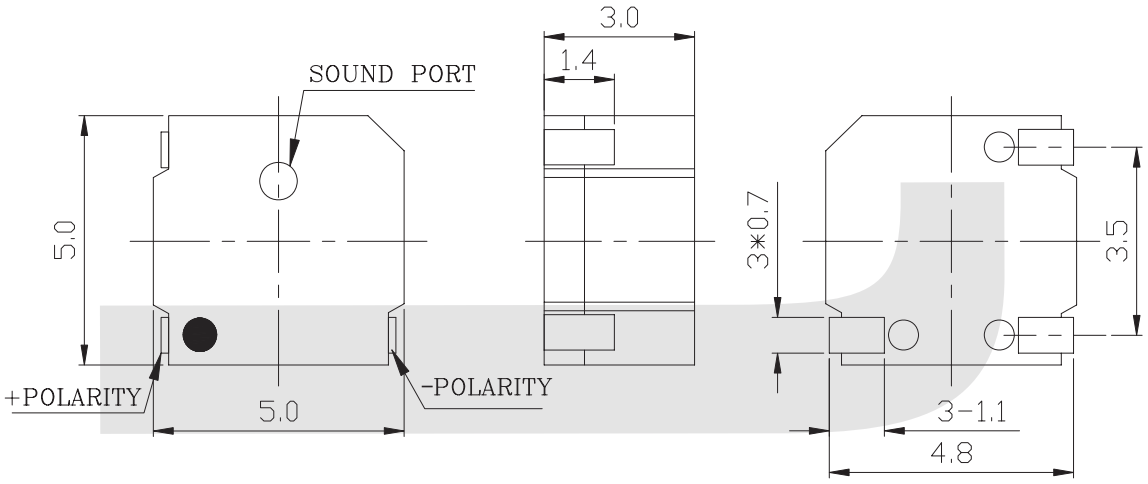

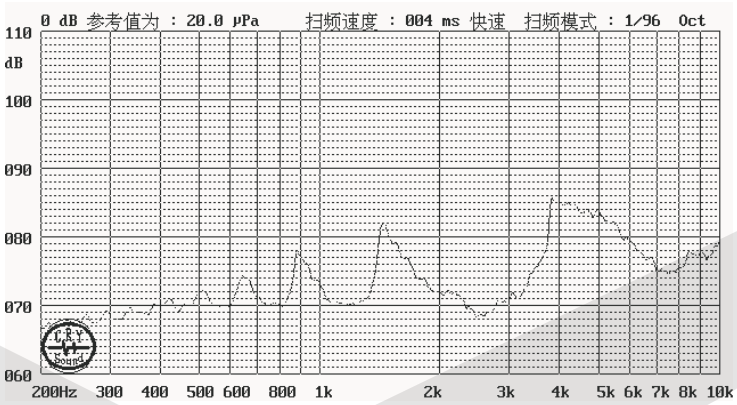

ORDER INFORMATION

Product NO.: KLS3-SMT - 05*03

Part Number
SMT Buzzer Series
Size specifications

SMT Buzzer Series

KLS3-SMT-8. 5*03A SMT Transducer Buzzer Series

SPECIFICATIONS

Rated Voltage	3. 6V_{O-P}
Operating Voltage	2. 5-4. 5V_{O-P}
Max.Rated Current	100mA
Min.S.P.L. (@ 10cm)	MIN. 85dB at Rated Voltage at 10cm
Coil Resistance(Ω)	16±3Ω
Resonant Frequency	2700Hz
Operating Temp	-20 ~ +70 ° C
Weight	0. 8g

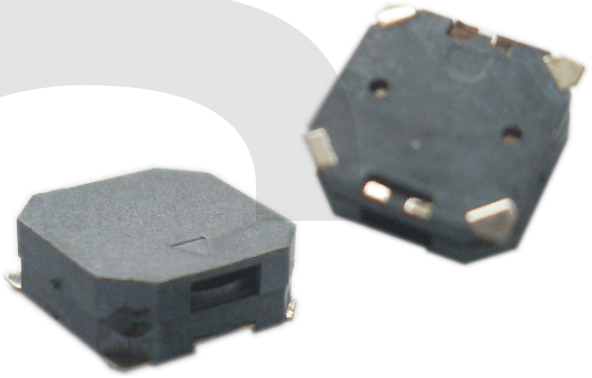

Dimensions (Unit:mm)

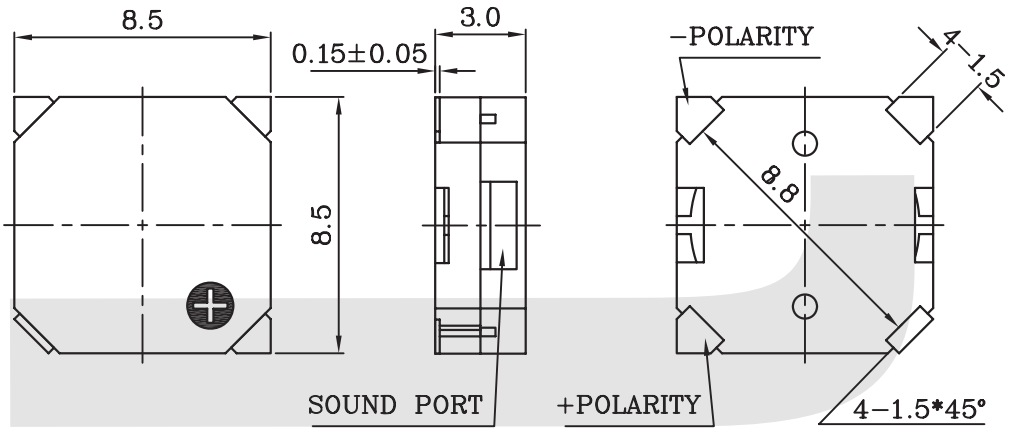

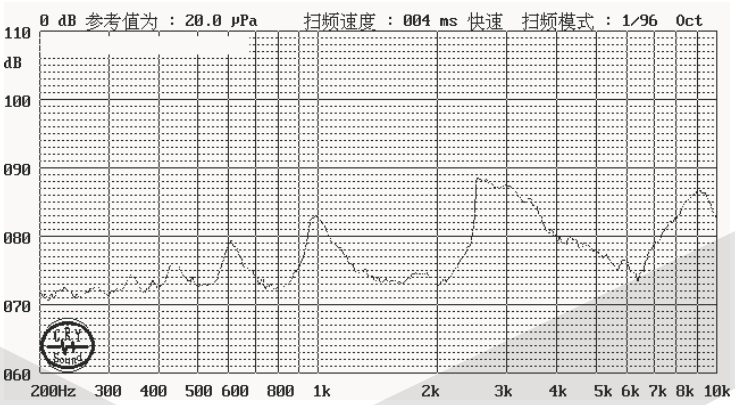

ORDER INFORMATION

Product NO.: KLS3-SMT - 8. 5*03A

Part Number
SMT Buzzer Series
Size specifications

SMT Buzzer Series

KLS3-SMT-8. 5*03B SMT Transducer Buzzer Series

SPECIFICATIONS

Rated Voltage	3. 6V_{O-P}
Operating Voltage	2. 5-4. 5V_{O-P}
Max.Rated Current	100mA
Min.S.P.L. (@ 10cm)	MIN. 85dB at Rated Voltage at 10cm
Coil Resistance(Ω)	16±3Ω
Resonant Frequency	2700Hz
Operating Temp	-20 ~ +70 ° C
Weight	0. 8g

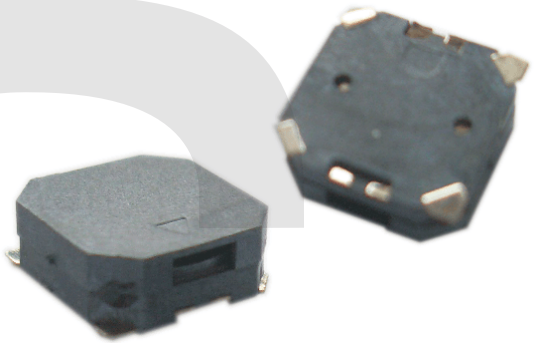

Dimensions (Unit:mm)

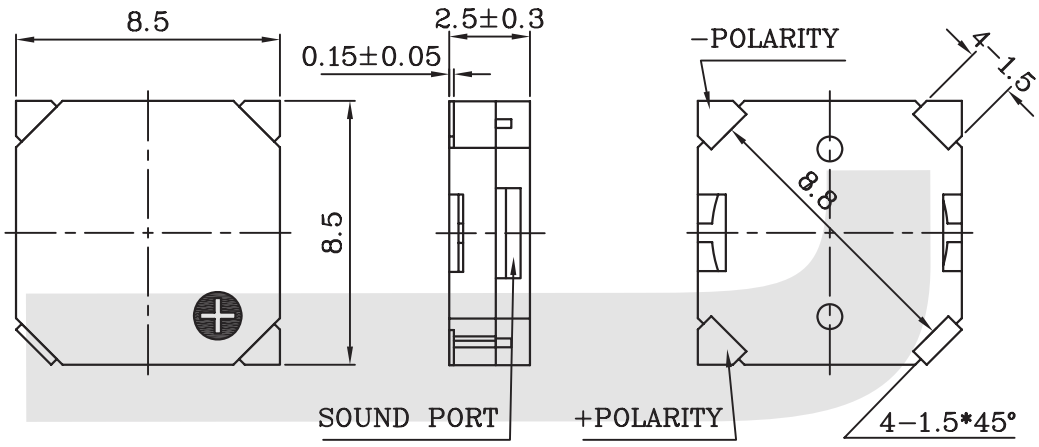

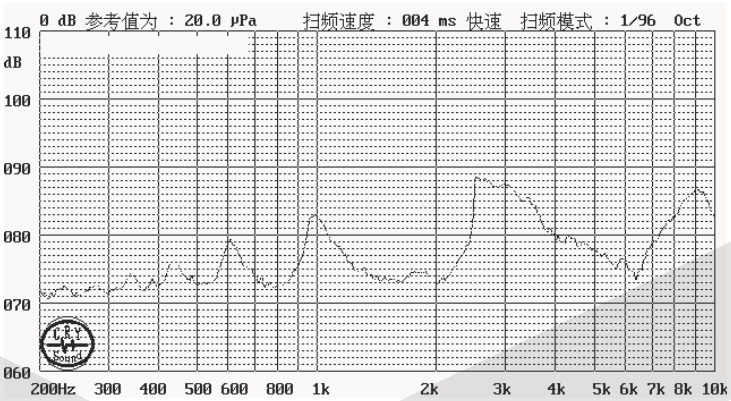

ORDER INFORMATION

Product NO.: KLS3-SMT - 8. 5*03B

Part Number
SMT Buzzer Series
Size specifications

SMT Buzzer Series

KLS3-SMT-8. 5*03C SMT Transducer Buzzer Series

SPECIFICATIONS

Rated Voltage	3. 6V_{O-P}
Operating Voltage	2. 5-4. 5V_{O-P}
Max.Rated Current	100mA
Min.S.P.L. (@ 10cm)	MIN. 85dB at Rated Voltage at 10cm
Coil Resistance(Ω)	16±3Ω
Resonant Frequency	2700Hz
Operating Temp	-20 ~ +70 ° C
Weight	0. 8g



Dimensions (Unit:mm)

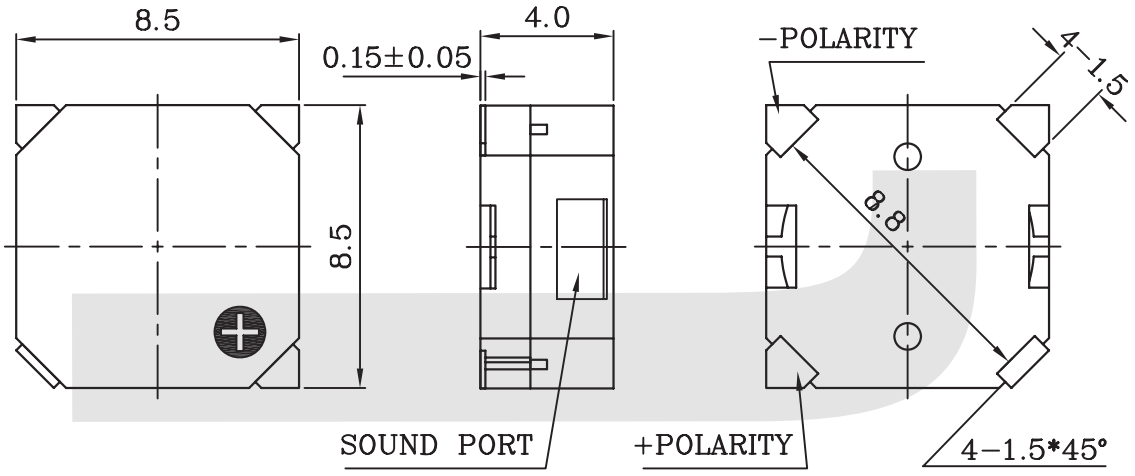

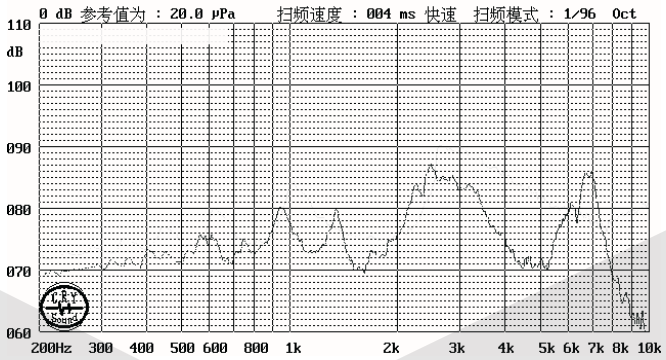

ORDER INFORMATION

Product NO.: KLS3-SMT - 8. 5*03C

Part Number
SMT Buzzer Series
Size specifications

SMT Buzzer Series

KLS3-SMT-08*03 8*8*3mm SMT Transducer Buzzer Series

SPECIFICATIONS

Rated Voltage	3. 6V_{O-P}
Operating Voltage	2-5V_{O-P}
Max.Rated Current	100mA
Min.S.P.L. (@ 10cm)	MIN. 85dB at Rated Voltage at 10cm
Coil Resistance(Ω)	16±3Ω
Resonant Frequency	2700Hz
Operating Temp	-20 ~ +70 ° C
Weight	1g



Dimensions (Unit:mm)

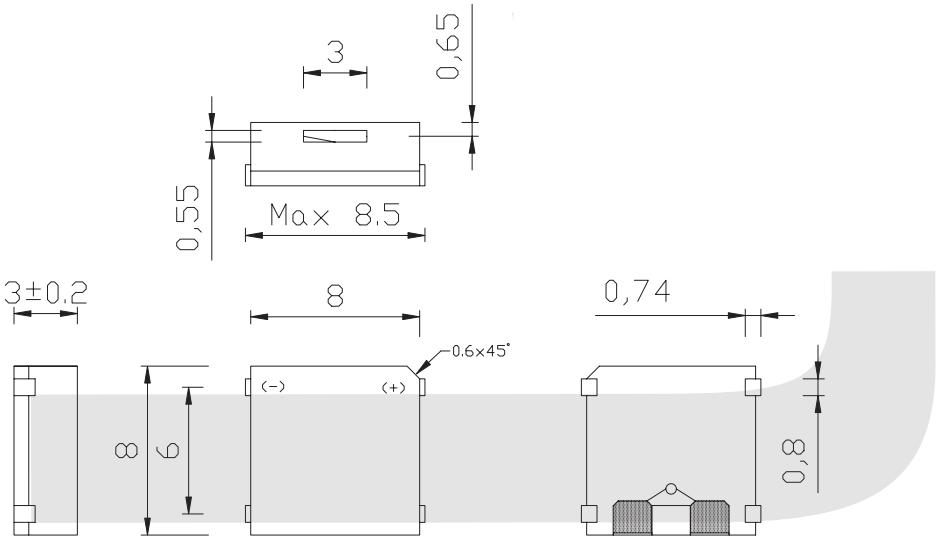

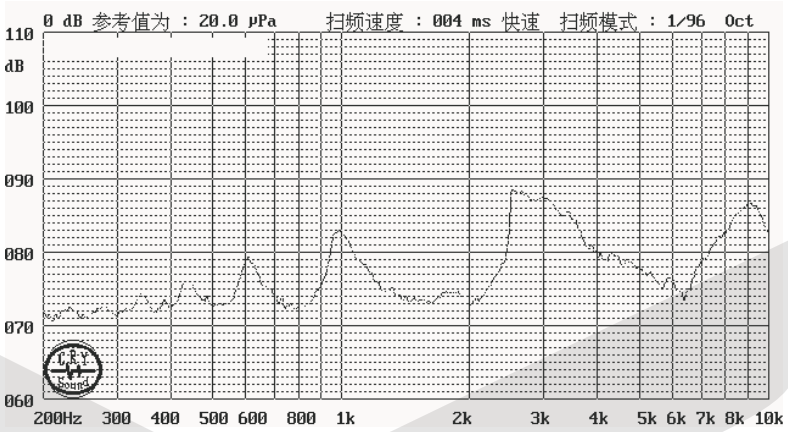

ORDER INFORMATION

Product NO.: KLS3-SMT - 08*03

Part Number
SMT Buzzer Series
Size specifications

SMT Buzzer Series

KLS3-SMT-09*2. 5 SMT Transducer Buzzer Series

III

SPECIFICATIONS

Rated Voltage	3. 6V_{O-P}
Operating Voltage	2. 5-4. 5V_{O-P}
Max.Rated Current	100mA
Min.S.P.L. (@ 10cm)	MIN. 85dB at Rated Voltage at 10cm
Coil Resistance(Ω)	16±3Ω
Resonant Frequency	2700Hz
Operating Temp	-20 ~ +70 ° C
Weight	0. 8g

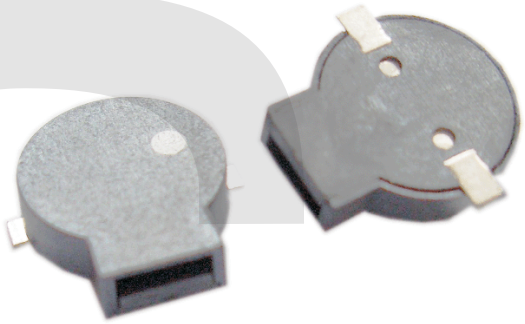

Dimensions (Unit:mm)

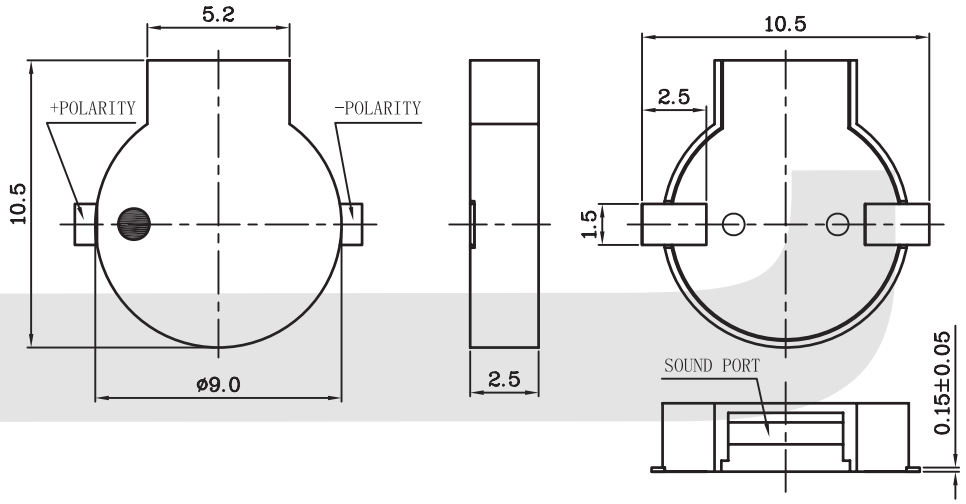

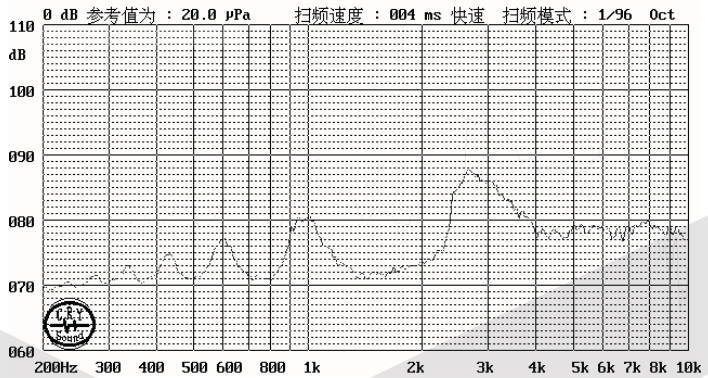

ORDER INFORMATION

Product NO.: KLS3-SMT - 09*2. 5

Part Number
SMT Buzzer Series
Size specifications

SMT Buzzer Series

KLS3-SMT-09*3. 2 SMT Transducer Buzzer Series

SPECIFICATIONS

Rated Voltage	3. 6V_{O-P}
Operating Voltage	2. 5-4. 5V_{O-P}
Max.Rated Current	100mA
Min.S.P.L. (@ 10cm)	MIN. 88dB at Rated Voltage at 10cm
Coil Resistance(Ω)	16±3Ω
Resonant Frequency	2700Hz
Operating Temp	-20 ~ +70 ° C
Weight	0. 8g

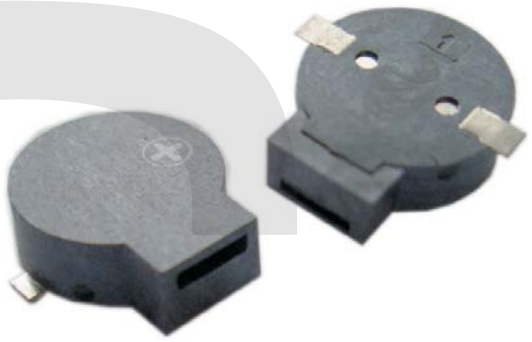

Dimensions (Unit:mm)

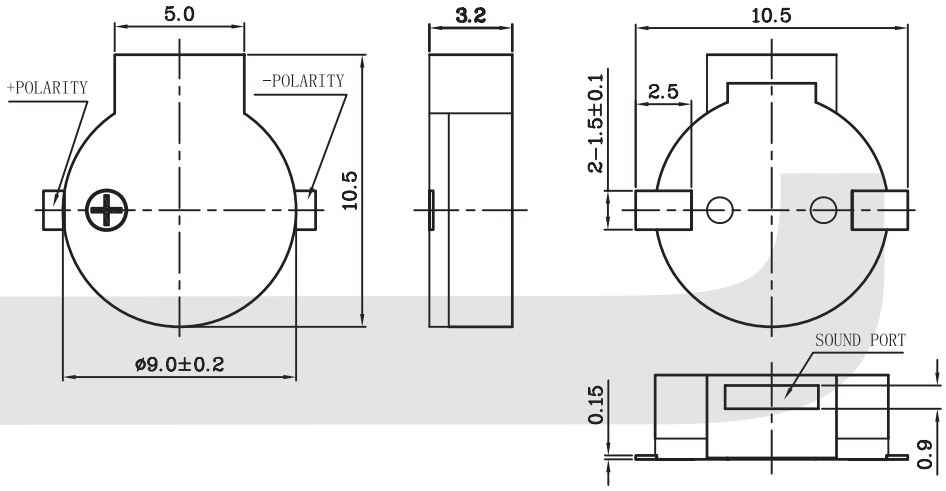

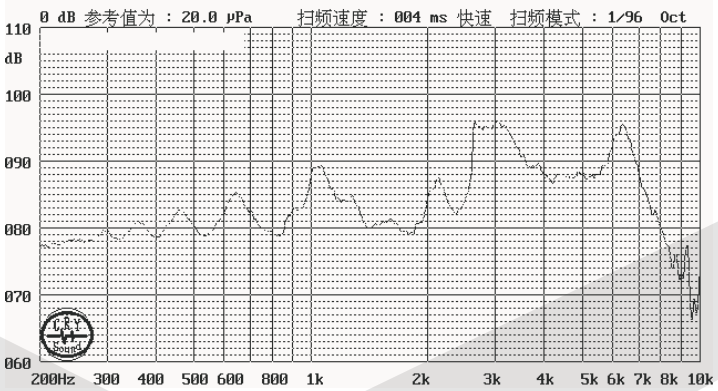

ORDER INFORMATION

Product NO.: KLS3-SMT - 09*3. 2

Part Number
SMT Buzzer Series
Size specifications

SMT Buzzer Series

KLS3-SMT-09*04 SMT Transducer Buzzer Series

SPECIFICATIONS

Rated Voltage	3. 6V_{O-P}
Operating Voltage	2. 5-4. 5V_{O-P}
Max.Rated Current	100mA
Min.S.P.L. (@ 10cm)	MIN. 88dB at Rated Voltage at 10cm
Coil Resistance(Ω)	16±3Ω
Resonant Frequency	2700Hz
Operating Temp	-20 ~ +70 ° C
Weight	0. 8g

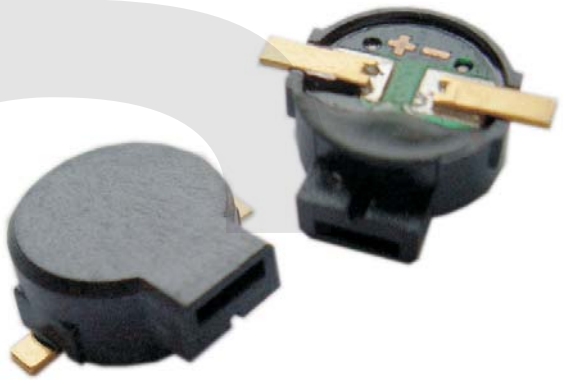

Dimensions (Unit:mm)

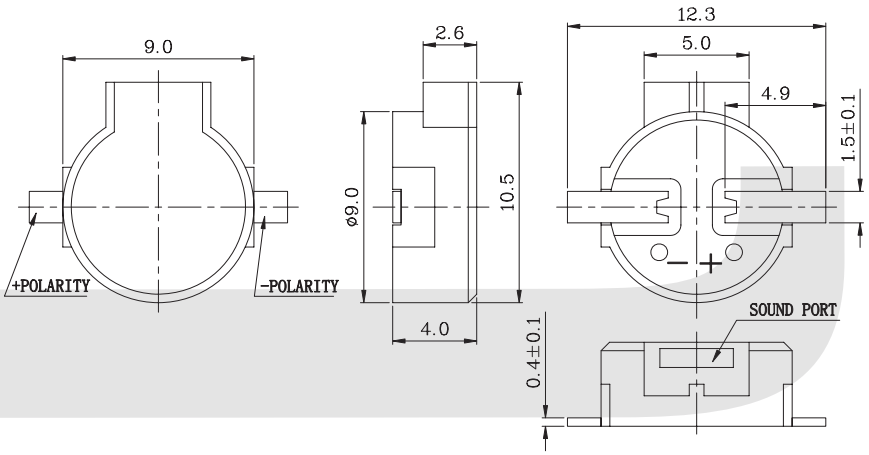

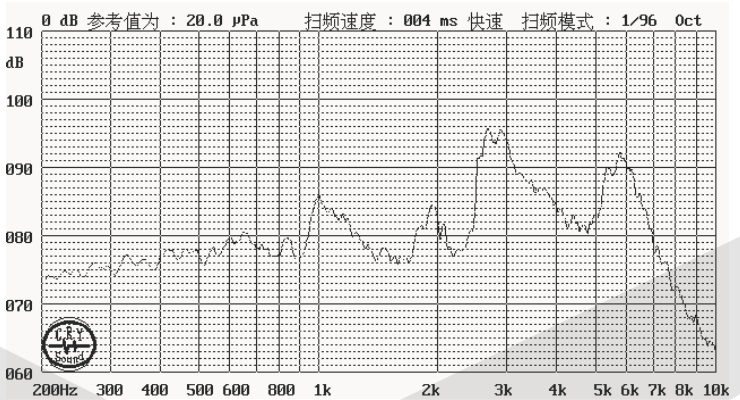

ORDER INFORMATION

Product NO.: KLS3-SMT - 09*04

Part Number
SMT Buzzer Series
Size specifications

SMT Buzzer Series

KLS3-SMT-14*04 14.4*14.4*4.3mm SMT Transducer Buzzer Series

SPECIFICATIONS

Rated Voltage	$5V_{P-P}$
Operating Voltage	$2\text{-}25V_{P-P}$
Max.Rated Current	2mA
Min.S.P.L. (@ 10cm)	83dB
Resonant Frequency	4. 0KHz
Capacitance at 100Hz	10000±30%pF
Operating Temp	-20 ~ +70 ° C
Weight	1. 2g



Dimensions (Unit:mm)

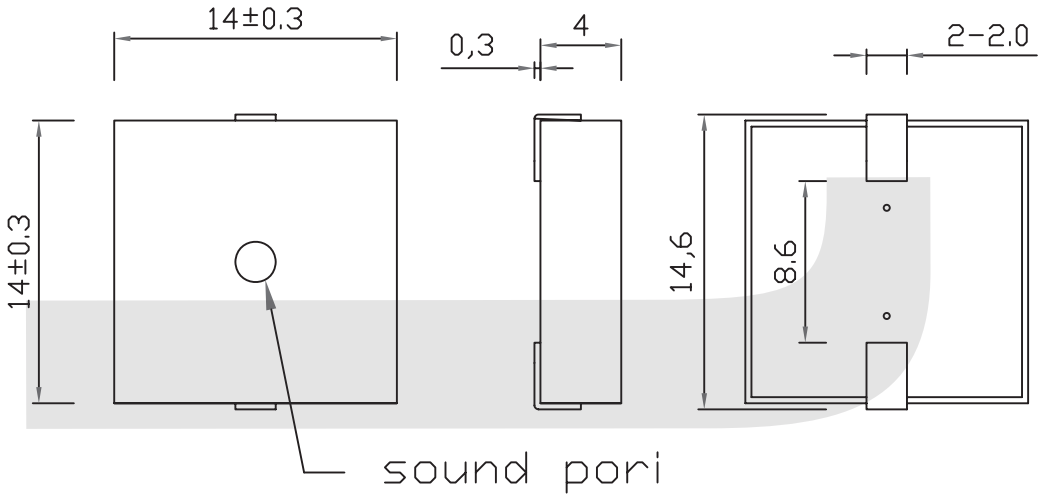

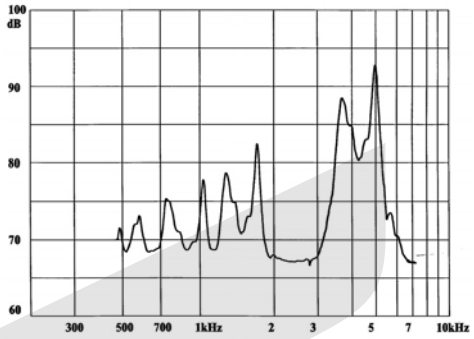

ORDER INFORMATION

Product NO.: KLS3-SMT - 14*04

Part Number
SMT Buzzer Series
Size specifications

Piezo Diaphragm Series

Special Shape Diaphragm Series

Special Shape Diaphragm

Many Kinds of Special Shape Piezo Diaphragm,Custom Design Welcome...



HideTechnical Data

Diameter: 13 mm to 43 mm
FT: Piezo Diaphragm
Material: T:Brass, N: Nickel-alloy, G: Stainless Steel

Tolerance:

D (Diameter): ± 0.1mm
d (Ceramic Dia): ± 0.3mm
T1 (Total Thickness): ± 0.05mm
T2 (Ceramic thickness): ± 0.03mm

Dimensions (Unit:mm)

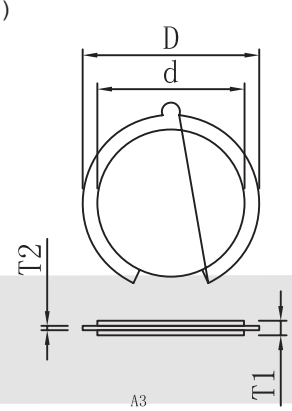

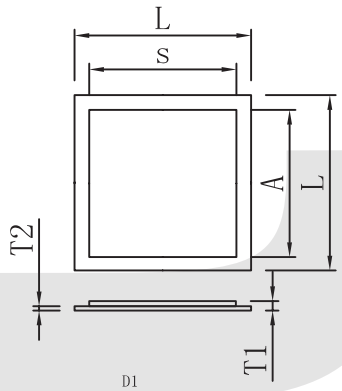

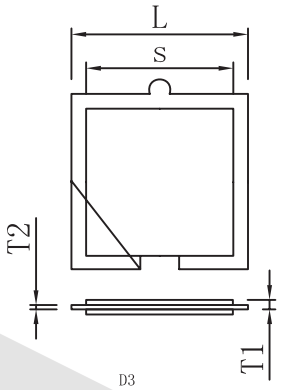

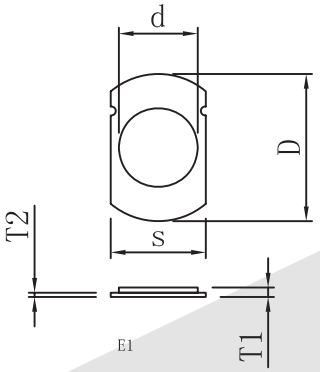

ORDER INFORMATION

Product NO.: KLS3- FT - 13 T - 10 D3

- KLS3- : Part Number
- FT : Piezo Diaphragm Series
- 13 : Diameter
- T : Material (T:Brass,N:Nickel-alloy,G:Stainless Steel)
- 10 : Frequency
- D3 : Shape

Piezo Diaphragm Series

Special Shape Diaphragm Series

Order Code	Shape	C(nF)	Zr(Ω)	Fr (KHz)	D (mm)	d(mm)	T1(mm)	T2(mm)	Metal
KLS3-FT-13T-10.0D3	D3	10nF 30%	80	10.0 0.5	13	13	0.5	0.15	Brass
KLS3-FT-13.8N-4.9D1	D1	22nF 30%	300	4.9 0.5	13.8	12	0.22	0.1	Alloy
KLS3-FT-14.2N-4.5D1	D1	70nF 30%	300	4.5 0.5	14.2	12	0.22	0.1	Alloy
KLS3-FT-15T-7.0E1	E1	55nF 30%	300	7.0 0.5	15	8	0.22	0.1	Brass
KLS3-FT-21.5T-3.5A3	A3	160nF 30%	100	3.5 0.5	21.5	20	0.3	0.05	Brass
KLS3-FT-21.5T-3.8A3	A3	100nF 30%	100	3.8 0.5	21.5	20	0.35	0.1	Brass
KLS3-FT-23.5T-4.8A3	A3	120nF 30%	100	4.8 0.5	23.5	22	0.4	0.05	Brass
KLS3-FT-27T-2.8A3	A3	130nF 30%	100	2.8 0.5	27	25	0.35	0.1	Brass
KLS3-FT-43T-2.5A3	A3	150nF 30%	100	2.5 0.5	43	25	0.35	0.1	Brass
KLS3-FT-43T-4.5A3	A3	80nF 30%	100	4.5 0.5	43	25	0.65	0.2	Brass

Piezo Diaphragm Series

External-Driven Diaphragm Series

External-Driven Diaphragm

Clear Sound, High SPL, Power Consumption, Small and Lightweight ...

HideTechnical Data

Diameter: 9.9 mm to 56 mm
FT: Piezo Diaphragm
Material: T: Brass, N: Nickel-alloy, G: Stainless Steel
A (Shape): External-Driven Type

Tolerance:

D (Diameter): ± 0.1mm
d (Ceramic Dia): ± 0.3mm
T1 (Total Thickness): ± 0.05mm
T2 (Ceramic thickness): ± 0.03mm

Dimensions (Unit:mm)

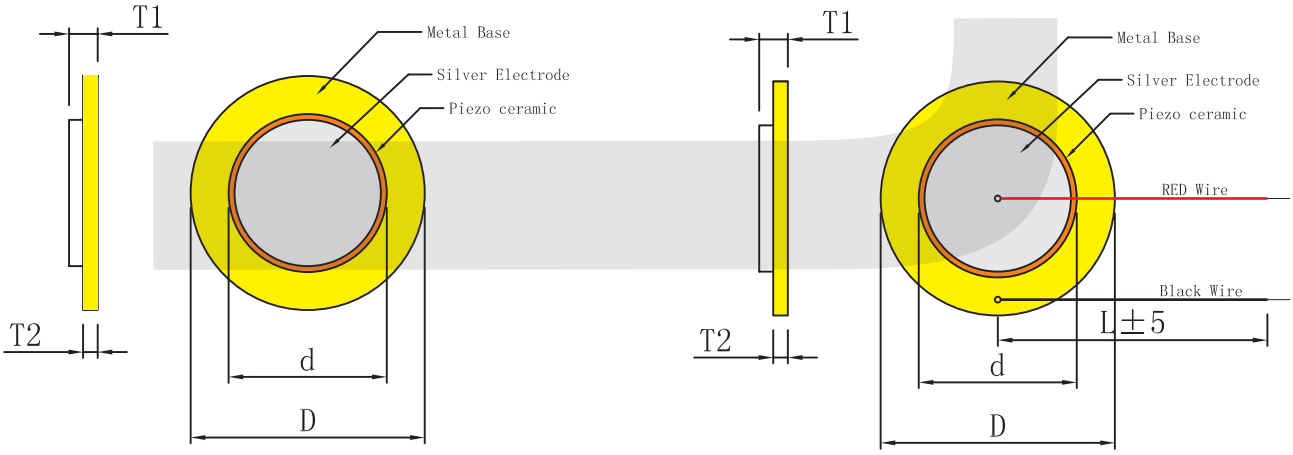

ORDER INFORMATION

Product NO.: KLS3- FT - 9.9 N - 7.5 A1

Part Number
Piezo Diaphragm Series
Diameter
Material T:Brass,N:Nickel-alloy,G:Stainless Steel
Frequency
Shape

Piezo Diaphragm Series

External-Driven Diaphragm Series

Order Code	Shape	C(nF)	Zr(Ω)	Fr (KHz)	D (mm)	d(mm)	T1(mm)	T2(mm)	Metal
KLS3-FT-9.9N-7.5A1	A1	10nF±30%	500	7.5±1.0	9.9	7	0.12	0.05	Alloy
KLS3-FT-10.5N-10.0A1	A1	5.5nF±30%	500	10.0±0.8	10.5	8	0.17	0.05	Alloy
KLS3-FF-11N-6.5A1	A1	10nF±30%	500	6.5±0.5	11	8	0.12	0.05	Alloy
KLS3-FT-11N-9.0A1	A1	11nF±30%	500	9.0±0.5	11	8	0.17	0.1	Alloy
KLS3-FT-11G-10.0A1	A1	9.5nF±30%	300	10±0.5	11	8	0.19	0.11	Brass
KLS3-FT-11G-9.6A1	A1	12nF±30%	500	9.6±0.5	11	8	0.17	0.1	SUS
KLS3-FT-11T-9.6A1	A1	12nF±30%	500	9.6±0.5	11	8	0.17	0.1	Brass
KLS3-FT-12.5T-8.5 A1	A1	11nF±30%	300	8.5±0.5	12.5	10	0.22	0.1	Brass
KLS3-FT-12N-5.5AI	A1	13nF±30%	500	5.5±0.5	12	9	0.12	0.05	Alloy
KLS3-FT-12N-6.0A1	A1	13nF±30%	500	6.0±0.5	12	9	0.12	0.05	Alloy
KLS3-FT-12T-5.3A1	A1	15nF±30%	500	5.3±0.5	12	9	0.12	0.05	Brass
KLS3-FT-12T-5.8AI	A1	16nF±30%	500	5.8±0.6	12	9.4	0.12	0.05	Brass
KLS3-FT-12T-6.0AI	A1	17nF±30%	500	6.0±0.5	12	9	0.12	0.06	Brass
KLS3-FT-12T-6.5A1	A1	15nF±30%	300	6.5±0.5	12	9	0.15	0.09	Brass
KLS3-FT-12T-8.0AI	A1	15nF±30%	300	8.0±0.5	12	9	0.19	0.1	Brass
KLS3-FT-12T-8.5A1	A1	10nF_30%	300	8.5±0.7	12	9	0.2	0.08	Brass
KLS3-FT-12T-9.05 A1	A1	15nF±30%	300	9.05±0.5	12	9	0.22	0.1	Brass
KLS3-FT-12T-9.0AI	A1	12nF±30%	300	9.0±0.5	12	10	0.2	0.1	Brass
KLS3-FT-13.5T-7.0 A1	A1	12nF±30%	300	7.0±0.5	13.5	9	0.22	0.1	Brass
KLS3-FT-13N-4.5A1	A1	15nF±30%	500	4.5±0.5	13	9	0.12	0.05	Alloy
KLS3-FT-13T-6.5A1	A1	13nF±30%	500	6.5±0.5	13	9	0.18	0.1	Brass
KLS3-FT-14N-4.3A1	A1	70nF±30%	300	4.3±0.5	14	12	0.12	0.05	Alloy
KLS3-FT-15N-4.2A1	A1	34nF±30%	500	3.5±0.5	15	12	0.13	0.05	Alloy
KLS3-FT-15N-4.6A1	A1	20nF±30%	500	4.6±0.5	15	12	0.2	0.1	Alloy
KLS3-FT-15T-10.0AI	A1	9nF±30%	300	10.0±0.5	15	11.3	0.37	0.2	Brass
KLS3-FT-15T-3.5AI	A1	35nF±30%	300	3.5±0.5	15	12	0.12	0.05	Brass
KLS3-FT-15T-4.5A1	A1	12nF±30%	300	4.5±0.5	15	9	0.2	0.1	Brass
KLS3-FT-15T-5.8AI	A1	10nF±30%	800	5.8±0.5	15	9	0.21	0.09	Brass
KLS3-FT-15T-6.0A1	A1	15nF±30%	300	6.0±0.5	15	12	0.22	0.1	Brass
KLS3-FT-15T-6.0A1	A1	10nF±30%	300	6.0±0.5	15	11.3	0.22	0.1	Brass

Piezo Diaphragm Series

External-Driven Diaphragm Series

Order Code	Shape	C(nF)	Zr(Ω)	Fr (KHz)	D (mm)	d(mm)	T1(mm)	T2(mm)	Metal
KLS3-FT-15T-6.0A1	A1	11nF±30%	300	6.0±0.5	15	10	0.22	0.1	Brass
KLS3-FT-15T-6.0A1	A1	9nF±30%	300	9.05±0.5	15	10	0.32	0.12	Brass
KLS3-FT-17.2N-3.5A1	A1	32nF±30%	300	3.5±0.5	17.2	13.4	0.18	0.1	Alloy
KLS3-FT-18T-3.6A1	A1	15nF±30%	300	3.6±0.5	18	12	0.2	0.08	Brass
KLS3-FT-19.9T-3.6A1	A1	20nF+30%	300	3.6±0.5	20	14	0.22	0.1	Brass
KLS3-FT-20G-7.5A1	A1	12nF±30%	300	7.5±0.5	20	15	0.45	0.23	SUS
KLS3-FT-20N-2.0A1	A1	70nF±30%	300	2.0±0.5	20	15	0.13	0.05	Alloy
KLS3-FT-20N-2.6A1	A1	24nF±30%	300	2.6±0.5	20	15	0.15	0.05	Alloy
KLS3-FF-20N-3.2A1	A1	24nF±30%	300	3.2±0.5	20	15	0.2	0.1	Alloy
KLS3-FT-20T-2.5A1	A1	70nF±30%	300	2.5±0.5	20	15	0.15	0.08	Brass
KLS3-FT-20T-3.0A1	A1	30nF±30%	300	3.0±0.3	20	15	0.19	0.1	Brass
KLS3-FT-20T-3.4A1	A1	20nF±30%	300	3.4±0.5	20	15	0.22	0.1	Brass
KLS3-FT-20T-3.6A1	A1	21nF±30%	300	3.6±0.5	20	15	0.22	0.1	Brass
KLS3-FT-20T-3.8A1	A1	19nF±30%	300	3.8±0.5	20	15	0.26	0.13	Brass
KLS3-FT-20T-4.0A1	A1	20nF±30%	300	4.0±0.5	20	15	0.22	0.14	Brass
KLS3-FT-20T-4.0A1	A1	26nF±30%	300	4.0±0.5	20	15	0.26	0.14	Brass
KLS3-FT-20T-4.8A1	A1	16nF±30%	300	4.8±0.5	20	15	0.3	0.15	Brass
KLS3-FT-20T-5.5A1	A1	15nF±30%	300	5.5±0.5	20	15	0.37	0.2	Brass
KLS3-FT-20T-6.0A1	A1	13nF±30%	300	6.0±0.5	20	15	0.42	0.2	Brass
KLS3-FT-20T-6.5A1	A1	15nF±30%	300	6.5±0.5	20	15	0.42	0.25	Brass
KLS3-FT-20T-7.2A1	A1	12nF±30%	300	7.2±0.5	20	15	0.47	0.25	Brass
KLS3-FT-21G-3.3A1	A1	26nF±30%	300	3.3±0.5	21.5	15	0.21	0.1	SUS
KLS3-FT-21T-4.5A1	A1	18nF+30%	300	4.5±0.5	21	15	0.3	0.15	Brass
KLS3-FT-22T-4.8A1	A1	12nF±30%	300	4.8±0.5	22	16.8	0.37	0.15	Brass
KLS3-FT-27G-3.6A1	A1	20nF±30%	300	3.6±0.5	27	20	0.42	0.2	SUS
KLS3-FT-27T-2.0A1	A1	50nF±30%	300	2.0±0.5	27	20	0.2	0.1	Brass
KLS3-FT-27T-2.3A1	A1	45nF±30%	300	2.3±0.5	27	20	0.22	0.1	Brass
KLS3-FT-27T-2.5A1	A1	45nF±30%	300	2.5±0.5	27	20	0.26	0.14	Brass
KLS3-FT-27T-2.8A1	A1	20nF±30%	300	2.8±0.5	27	20	0.32	0.1	Brass
KLS3-FT-27T-3.5A1	A1	30nF±30%	300	3.5±0.5	27	20	0.37	0.2	Brass

Piezo Diaphragm Series

External-Driven Diaphragm Series

Order Code	Shape	C(nF)	Zr(Ω)	Fr (KHz)	D (mm)	d(mm)	T1(mm)	T2(mm)	Metal
KLS3-FT-27T-3.6A1	A1	20nF±30%	300	3.6±0.5	27	20	0.42	0.2	Brass
KLS3-FT-27T-4.0A1	A1	23nF±30%	300	4.0±0.5	27	20	0.52	0.3	Brass
KLS3-FT-27T-4.0A1	A1	20nF±30%	300	4.0±0.5	27	20	0.47	0.25	Brass
KLS3-FT-27T-4.6A1	A1	20nF±30%	300	4.6±0.5	27	20	0.52	0.3	Brass
KLS3-FT-30T-0.9A1	A1	49nF±30%	300	0.9±0.5	30	20	0.16	0.05	Brass
KLS3-FT-31G-1.6A1	A1	45nF±30%	300	1.6±0.5	31	20	0.22	0.1	SUS
KLS3-FT-31N-1.4A1	A1	45nF±30%	300	1.4±0.5	31	20	0.22	0.1	Alloy
KLS3-FT-31T-1.4A1	A1	45nF±30%	300	1.4±0.5	31	20	0.22	0.1	Brass
KLS3-HFT-31T-1.4A1	A1	70nF±T30%	300	1.4±0.5	31	20	0.22	0.1	Brass
KLS3-FT-32T-2.9A1	A1	30nF±30%	300	2.9±0.5	32	25	0.42	0.2	Brass
KLS3-FT-35T-1.8A1	A1	70nF±30%	300	1.8±0.5	35	25	0.32	0.2	Brass
KLS3-FT-35T-2.3A1	A1	28nF±30%	300	2.3±0.5	35	25	0.42	0.2	Brass
KLS3-FT-35T-2.6A1	A1	28nF±30%	300	2.6±0.5	35	25	0.52	0.3	Brass
KLS3-FT-38T-2.8A1	A1	32nF±30%	300	2.8±0.2	38	25	0.73	0.47	Brass
KLS3-FT-39T-2.4A1	A1	32nF±30%	400	2.4±0.5	39	25	0.66	0.4	Brass
KLS3-FT-41N-0.7A1	A1	80nF±30%	800	0.7±0.5	41	25	0.22	0.1	Alloy
KLS3-FT-41T-1.0A1	A1	80nF±30%	800	1.0±0.5	41	25	0.22	0.1	Brass
KLS3-FT-41T-1.2A1	A1	75nF±30%	800	1.2±0.5	41	25	0.27	0.15	Brass
KLS3-FT-43T-0.8A1	A1	75nF±30%	800	0.8±0.5	43	25	0.22	0.1	Brass
KLS3-FT-45T-0.7A1	A1	80nF±30%	300	0.7±0.5	45	25	0.22	0.1	Brass
KLS3-FT-50T-1.8A1	A1	75nF±30%	300	1.8±0.5	50	25	0.22	0.1	Brass
KLS3-FT-50T-2.1A1	A1	75nF±30%	300	2.1±0.5	50	25	0.27	0.15	Brass
KLS3-FT-50T-2.7A1	A1	35nF±30%	300	2.7±0.5	50	25	0.42	0.2	Brass
KLS3-FT-50T-3.0A1	A1	28nF±30%	300	3.0±0.5	50	25	0.42	0.2	Brass
KLS3-FT-55G-3.2A1	A1	30nF±30%	300	3.2±0.5	55	25	0.42	0.2	SUS

Piezo Diaphragm Series

Self-Driven Diaphragm Series

Self-Driven Diaphragm

Clear Sound, High SPL,Power Consumption,Small and Lightweight...

HideTechnical Data

Diameter: 12 mm to 35 mm
FT: Piezo Diaphragm
Material: T:Brass, N: Nickel-alloy, G: Stainless Steel
B (Shape): Self-Driven Diaphragm type

Tolerance:

D (Diameter): ± 0.1mm
d (Ceramic Dia): ± 0.3mm
T1 (Total Thickness): ± 0.05mm
T2 (Ceramic thickness): ± 0.03mm

Dimensions (Unit:mm)

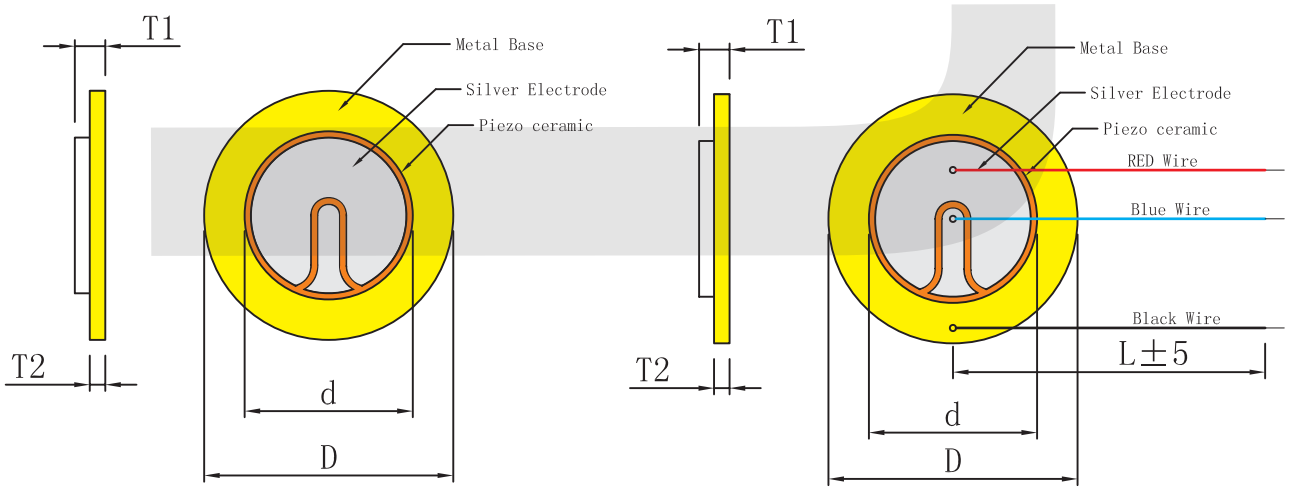

ORDER INFORMATION

Product NO.: KLS3- FT - 12 N - 5.8 B1

- KLS3- : Part Number
- FT : Piezo Diaphragm Series
- 12 : Diameter
- N : Material (T:Brass,N:Nickel-alloy,G:Stainless Steel)
- 5.8 : Frequency
- B1 : Shape

Piezo Diaphragm Series

Self-Driven Diaphragm Series

Order Code	Shape	C(nF)	Zr(Ω)	Fr (KHz)	D (mm)	d(mm)	T1(mm)	T2(mm)	Metal
KLS3-FT-12N-5.8B1	B1	12nF±30%	500	5.8±0.5	12	9	0.12	0.05	Alloy
KLS3-FT-15N-4.0B1	B1	30nF±30%	500	4.0±0.5	15	12	0.13	0.05	Alloy
KLS3-FT-15T-4.2B1	B1	25nF±30%	300	4.2±0.5	15	12	0.14	0.05	Brass
KLS3-FT-18T-3.6B1	B1	12nF±30%	300	3.6±0.5	18	12	0.2	0.08	Brass
KLS3-FT-20N-3.6B1	B1	20nF±30%	300	3.6±0.5	20	15	0.22	0.1	Alloy
KLS3-FT-20T-4.0B1	B1	20nF±30%	300	4.0±0.5	20	15	0.26	0.14	Brass
KLS3-FT-20T-4.2B1	B1	24nF±30%	300	4.2±0.5	20	15	0.31	0.2	Brass
KLS3-FT-20G-4.2B1	B1	15nF±30%	300	4.2±0.5	20	15	0.26	0.1	SUS
KLS3-FT-20T-5.3B1	B1	15nF±30%	300	5.3±0.5	20	15	0.32	0.15	Brass
KLS3-FT-20T-6.0B1	B1	12nF±30%	300	6.0±0.5	20	15	0.42	0.2	Brass
KLS3-FT-20T-7.0B1	B1	12nF±30%	300	7.0±0.5	20	15	0.47	0.25	Brass
KLS3-FT-21G-6.5B1	B1	12nF±30%	300	6.5±0.5	21	15	0.46	0.24	SUS
KLS3-FT-21G-7.0B1	B1	12nF±30%	300	7.0±0.5	21	15	0.45	0.23	SUS
KLS3-FT-22.5G-6.0B1	B1	12nF±30%	300	6.0±0.5	22.5	16.8	0.42	0.2	SUS
KLS3-FT-27T-4.0B1	B1	20nF±30%	300	4.0±0.5	27	20	0.47	0.25	Brass
KLS3-FT-35T-2.9B1	B1	30nF±30%	300	2.9±0.5	35	25	0.62	0.4	Brass
KLS3-FT-35G-2.9B1	B1	25nF±30%	300	2.9±0.5	35	25	0.52	0.3	SUS

Microphones

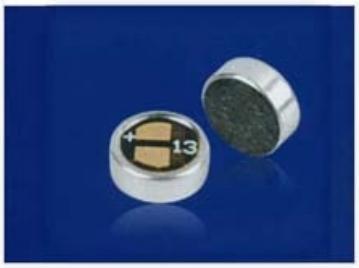

6022LC

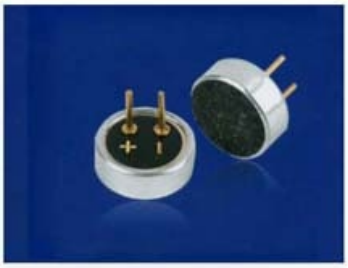

6022PC

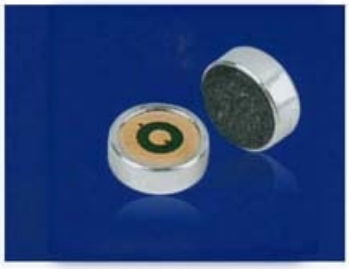

6022SC

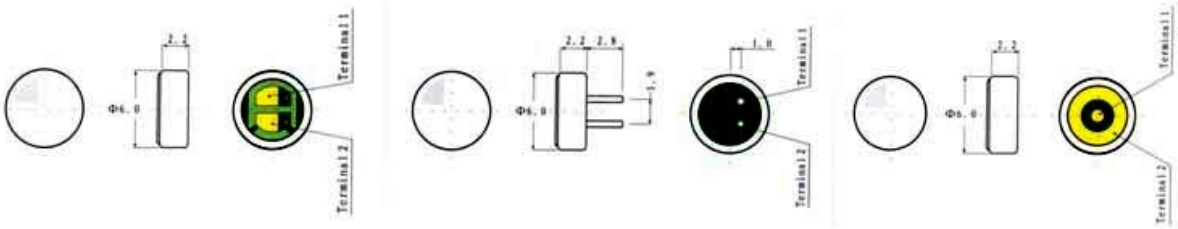

Specifications

Sensitivity :	-36～-50(dB)
Directivity :	Omnidirectional
Impedance :	Low impedance
Standard Operation Voltage :	2.0V DC
Current Consumption:	Max. 0.5mA
Sensitivity Reduction :	Within -3dB at 1.5V
S/N Ratio :	More than 58dB

Angular Response

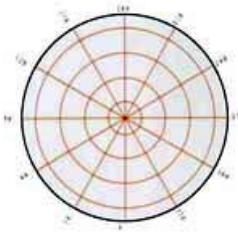

Typical Frequency Response Curve

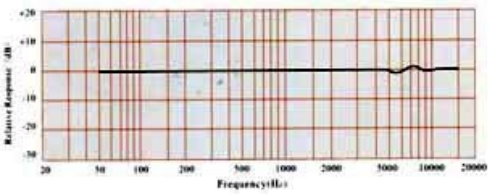

Schematic Diagram

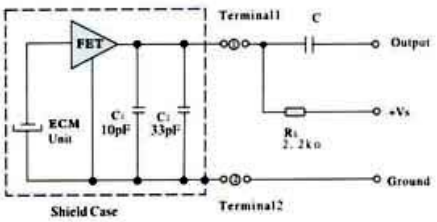

Microphones



4013LC

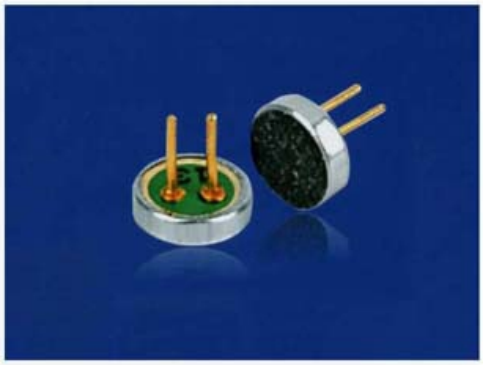

4013PC

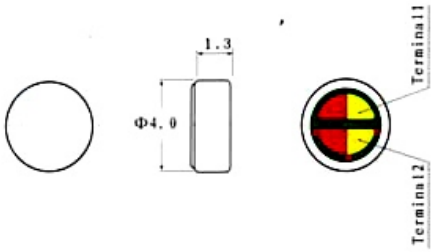

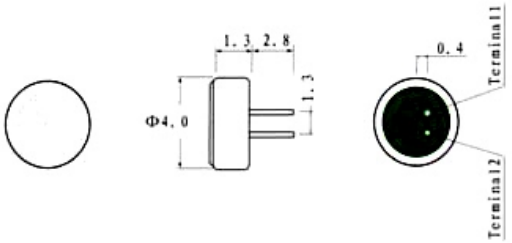

Specifications	
Sensitivity :	-36～-50(dB)
Directivity :	Omnidirectional
Impedance :	Low impedance
Standard Operation Voltage :	2.0V DC
Current Consumption:	Max. 0.5mA
Sensitivity Reduction :	Within -3dB at 1.5V
S/N Ratio :	More than 58dB

Angular Response

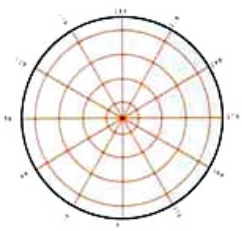

Typical Frequency Response Curve

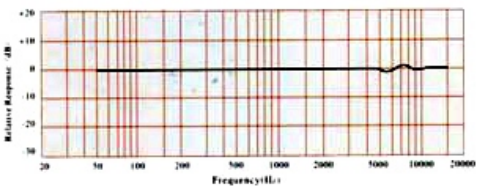

Schematic Diagram

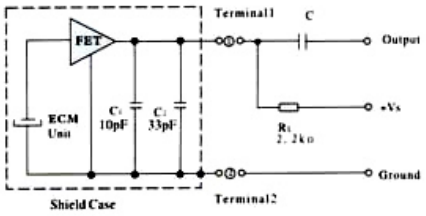

Microphones



4015LC



4015PC



4015SC

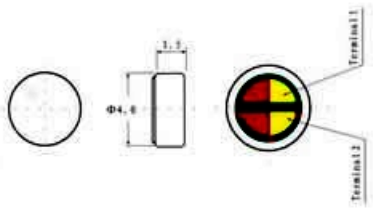

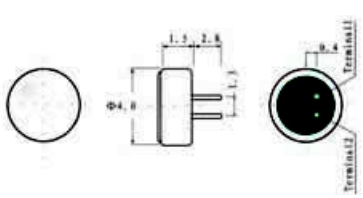

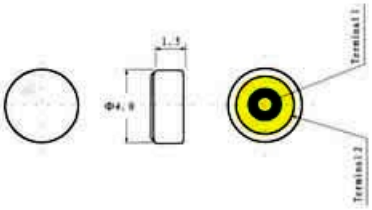

Specifications

Sensitivity :	-36～-50(dB)
Directivity :	Omnidirectional
Impedance :	Low impedance
Standard Operation Voltage :	2.0V DC
Current Consumption:	Max. 0.5mA
Sensitivity Reduction :	Within -3dB at 1.5V
S/N Ratio :	More than 58dB

Angular Response

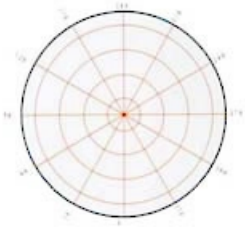

Typical Frequency Response Curve

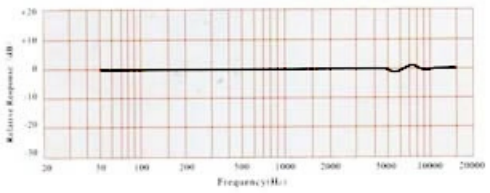

Schematic Diagram

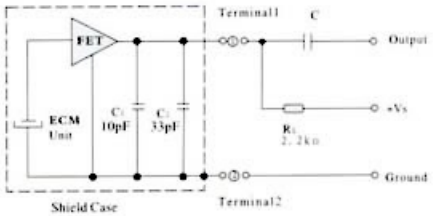

Microphones



4018LC



4018PC

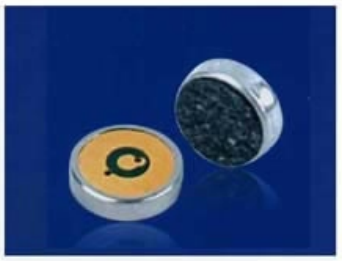

4018SC

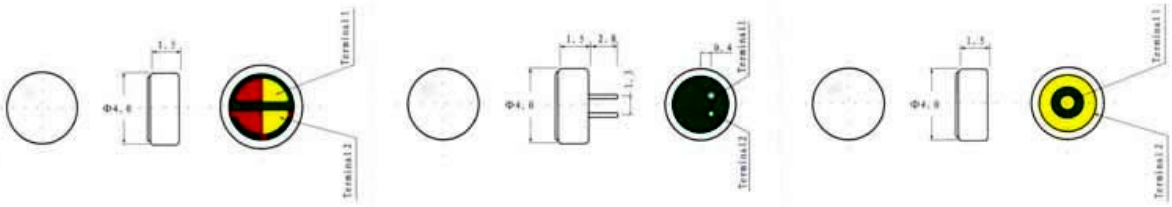

Specifications

Sensitivity :	-36～-50(dB)
Directivity :	Omnidirectional
Impedance :	Low impedance
Standard Operation Voltage :	2.0V DC
Current Consumption:	Max. 0.5mA
Sensitivity Reduction :	Within -3dB at 1.5V
S/N Ratio :	More than 58dB

Angular Response

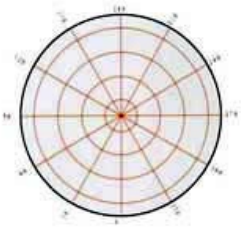

Typical Frequency Response Curve

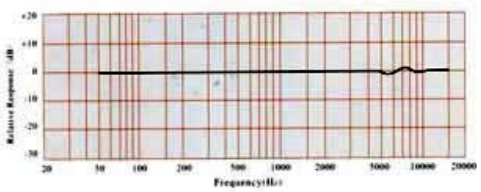

Schematic Diagram

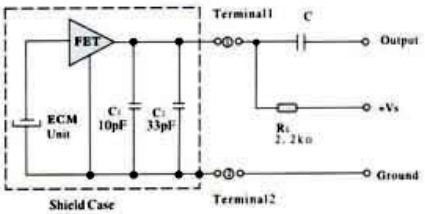

Microphones

III



4015NLC



4020NLC

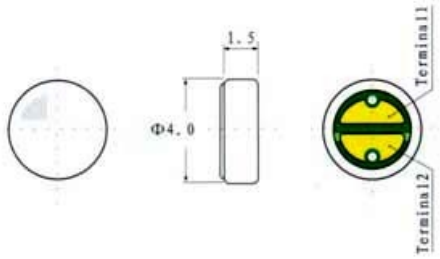

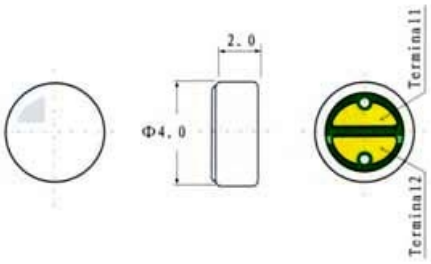

Specifications

Sensitivity :	-36～-50(dB)
Directivity :	Omnidirectional
Impedance :	Low impedance
Standard Operation Voltage :	2.0V DC
Current Consumption:	Max. 0.5mA
Sensitivity Reduction :	Within -3dB at 1.5V
S/N Ratio :	More than 58dB

Angular Response

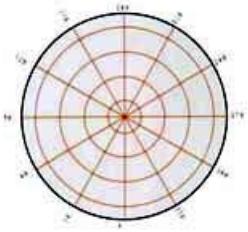

Typical Frequency Response Curve

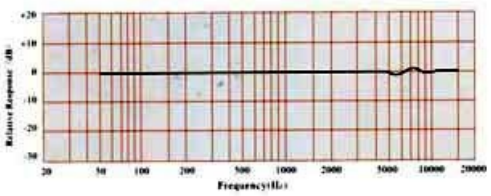

Schematic Diagram

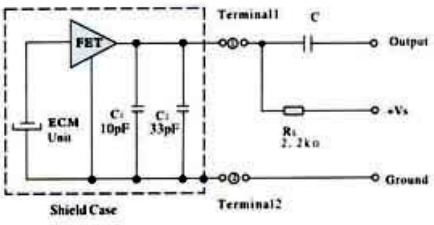

Microphones



4020ULC

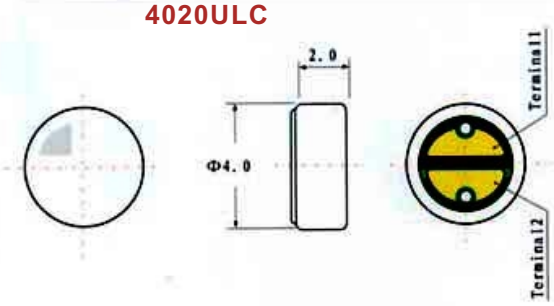

Specifications

Sensitivity :	-36～-50(dB)
Directivity :	Omnidirectional
Impedance :	Low impedance
Standard Operation Voltage :	2.0V DC
Current Consumption:	Max. 0.5mA
Sensitivity Reduction :	Within -3dB at 1.5V
S/N Ratio :	More than 58dB

Angular Response

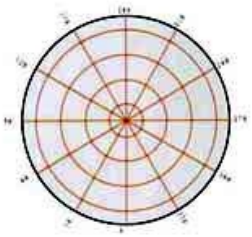

Typical Frequency Response Curve

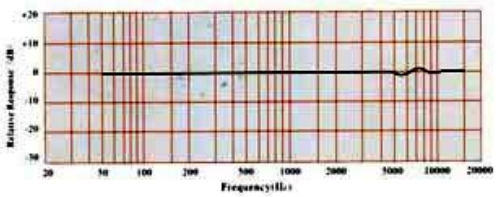

Schematic Diagram

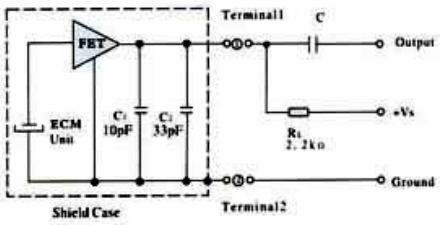

Microphones

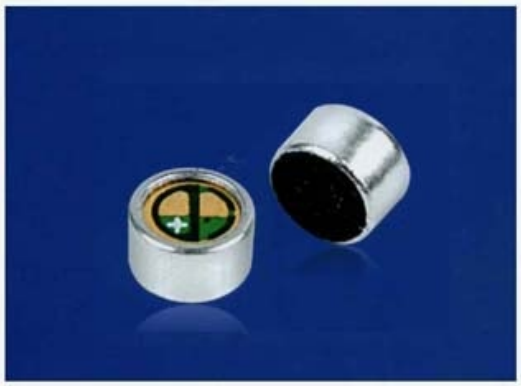

4027LC



4027PC

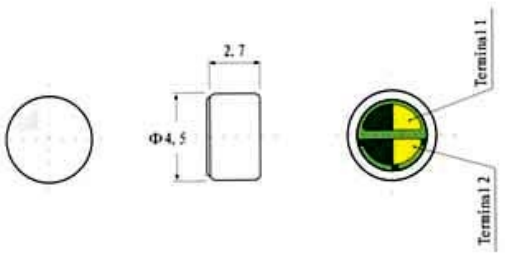

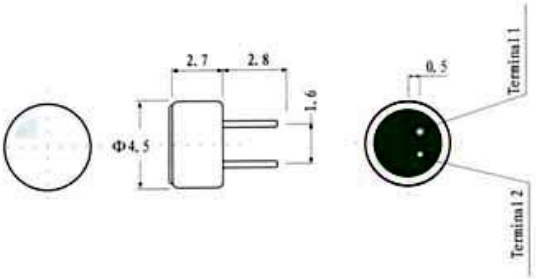

Specifications

Sensitivity :	-36～-50(dB)
Directivity :	Omnidirectional
Impedance :	Low impedance
Standard Operation Voltage :	2.0V DC
Current Consumption:	Max. 0.5mA
Sensitivity Reduction :	Within -3dB at 1.5V
S/N Ratio :	More than 58dB

Angular Response

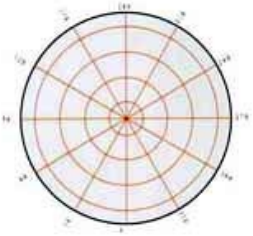

Typical Frequency Response Curve

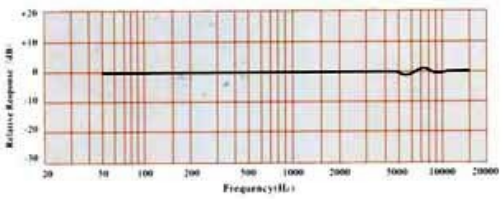

Schematic Diagram

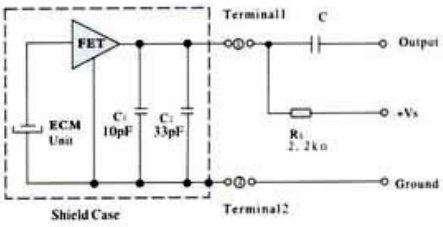

Microphones



4013LC

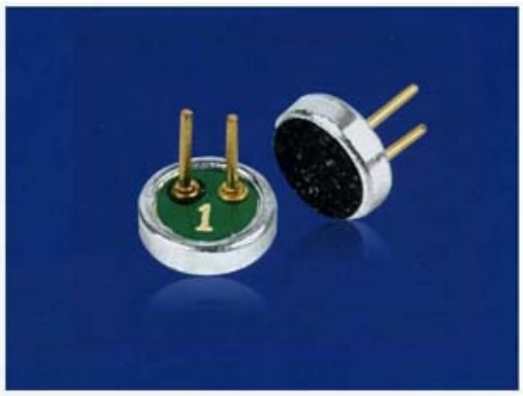

4013PC

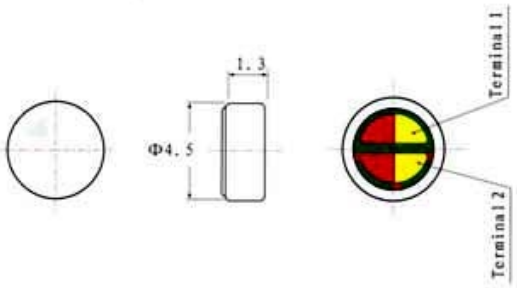

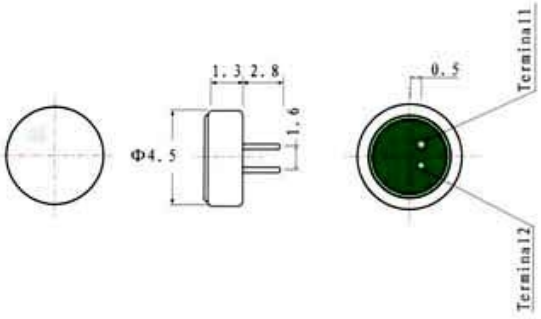

Specifications

Sensitivity :	-36～-50(dB)
Directivity :	Omnidirectional
Impedance :	Low impedance
Standard Operation Voltage :	2.0V DC
Current Consumption:	Max. 0.5mA
Sensitivity Reduction :	Within -3dB at 1.5V
S/N Ratio :	More than 58dB

Angular Response

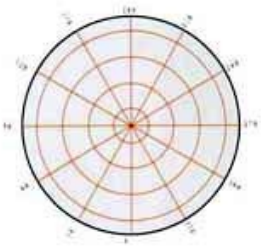

Typical Frequency Response Curve

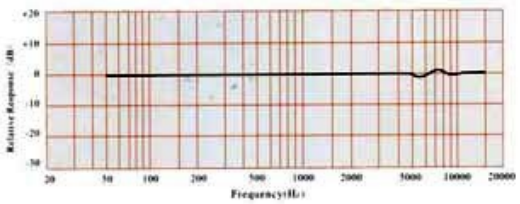

Schematic Diagram

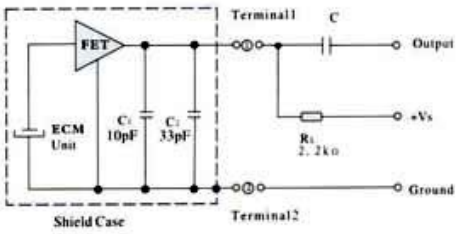

Microphones



4018LC



4018PC



4018SC

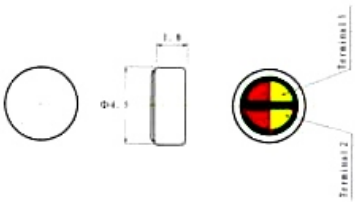

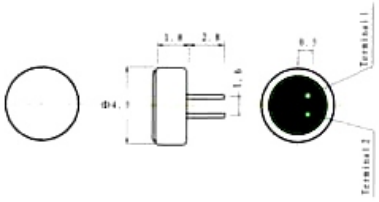

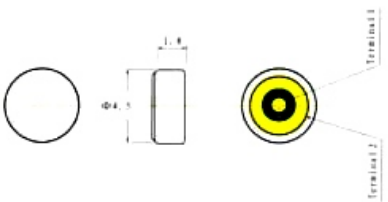

Specifications

Sensitivity :	-36～-50(dB)
Directivity :	Omnidirectional
Impedance :	Low impedance
Standard Operation Voltage :	2.0V DC
Current Consumption:	Max. 0.5mA
Sensitivity Reduction :	Within -3dB at 1.5V
S/N Ratio :	More than 58dB

Angular Response

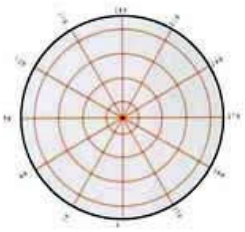

Typical Frequency Response Curve

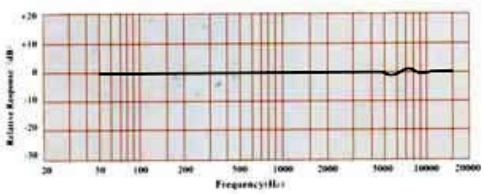

Schematic Diagram

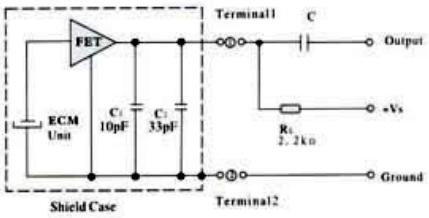

Microphones



6011LC



6011PC



6011SC

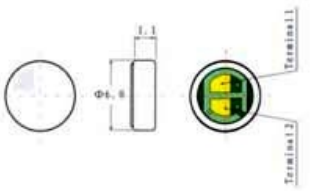

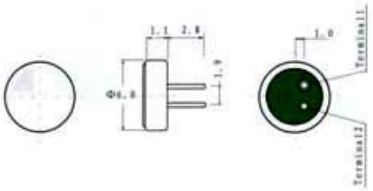

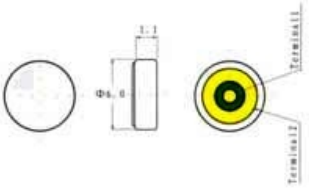

Specifications

Sensitivity :	-36～-50(dB)
Directivity :	Omnidirectional
Impedance :	Low impedance
Standard Operation Voltage :	2.0V DC
Current Consumption:	Max. 0.5mA
Sensitivity Reduction :	Within -3dB at 1.5V
S/N Ratio :	More than 58dB

Angular Response

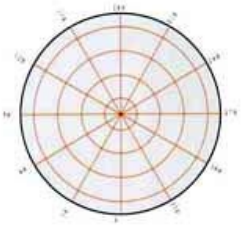

Typical Frequency Response Curve

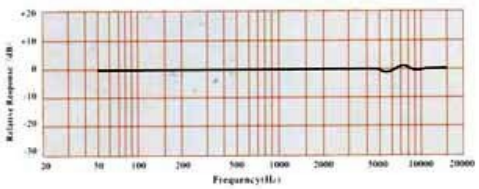

Schematic Diagram

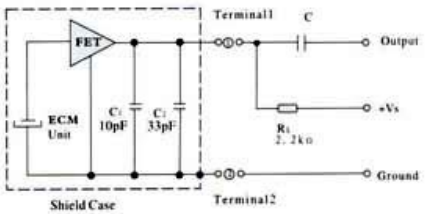

Microphones

III



6013LC



6013PC



6013SC

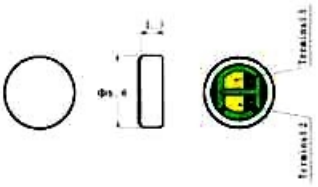

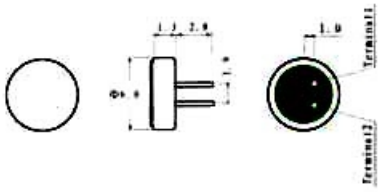

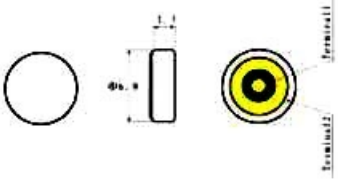

Specifications

Sensitivity :	-36～-50(dB)
Directivity :	Omnidirectional
Impedance :	Low impedance
Standard Operation Voltage :	2.0V DC
Current Consumption:	Max. 0.5mA
Sensitivity Reduction :	Within -3dB at 1.5V
S/N Ratio :	More than 58dB

Angular Response

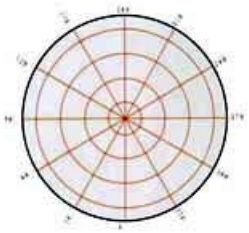

Typical Frequency Response Curve

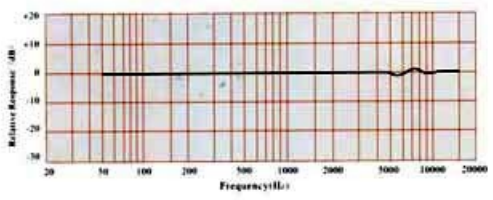

Schematic Diagram

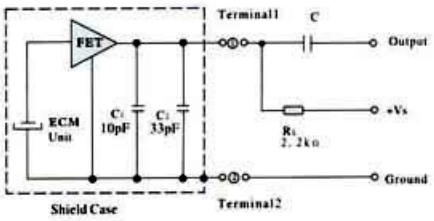

Microphones



6015LC



6015PC

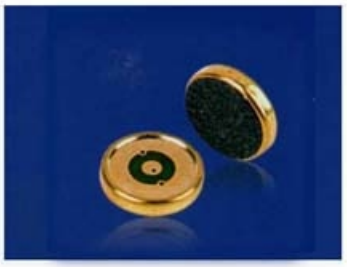

6015SC

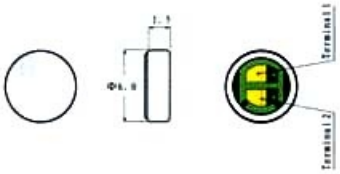

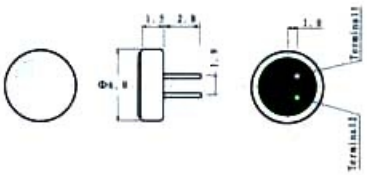

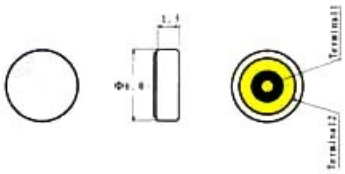

Specifications

Sensitivity :	-36～-50(dB)
Directivity :	Omnidirectional
Impedance :	Low impedance
Standard Operation Voltage :	2.0V DC
Current Consumption:	Max. 0.5mA
Sensitivity Reduction :	Within -3dB at 1.5V
S/N Ratio :	More than 58dB

Angular Response

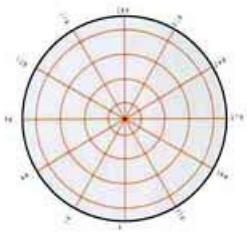

Typical Frequency Response Curve

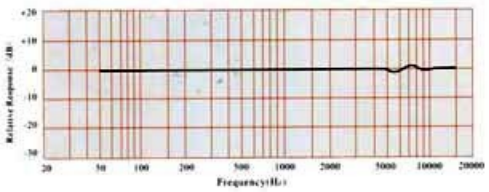

Schematic Diagram

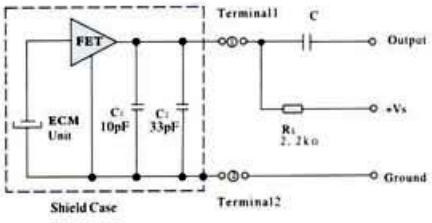

Microphones



4010LC

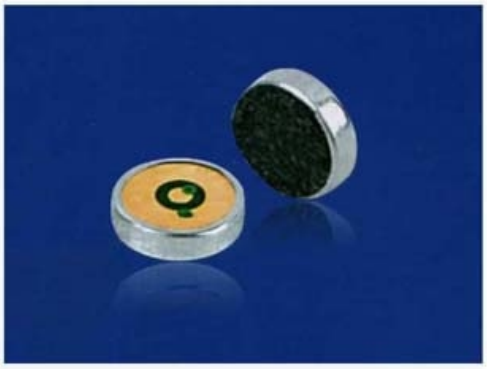

4010SC

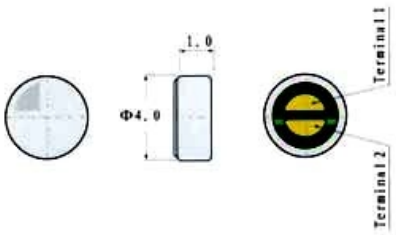

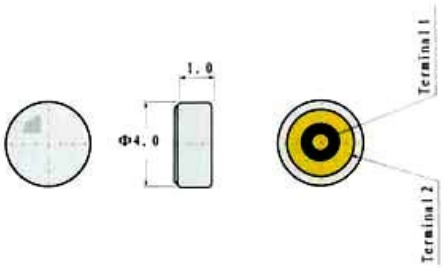

Specifications

Sensitivity :	-36～-50(dB)
Directivity :	Omnidirectional
Impedance :	Low impedance
Standard Operation Voltage :	2.0V DC
Current Consumption:	Max. 0.5mA
Sensitivity Reduction :	Within -3dB at 1.5V
S/N Ratio :	More than 58dB

Angular Response

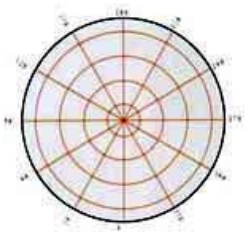

Typical Frequency Response Curve

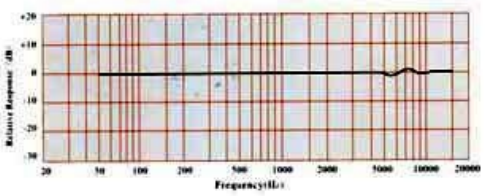

Schematic Diagram

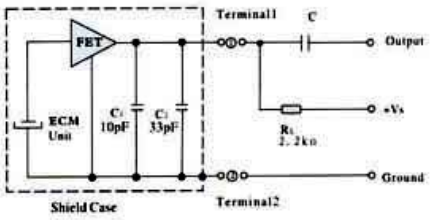

Microphones



6018NL



6022NL

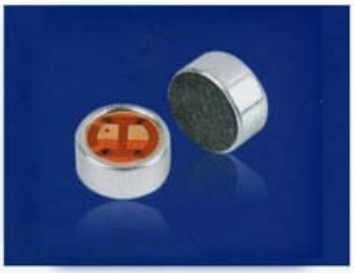

6027NL

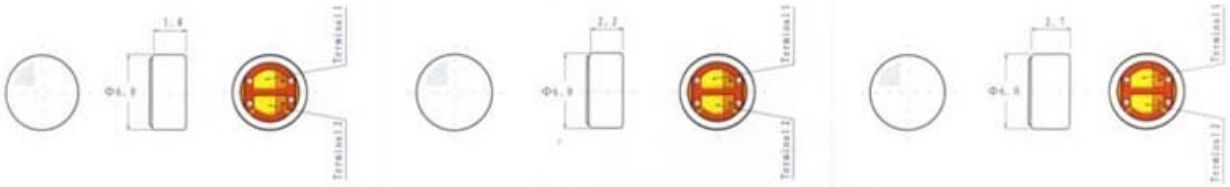

Specifications

Sensitivity :	-36～-50(dB)
Directivity :	Omnidirectional
Impedance :	Low impedance
Standard Operation Voltage :	2.0V DC
Current Consumption:	Max. 0.5mA
Sensitivity Reduction :	Within -3dB at 1.5V
S/N Ratio :	More than 58dB

Angular Response

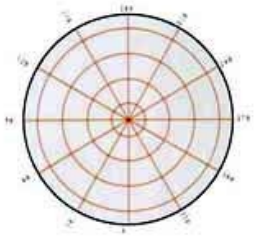

Typical Frequency Response Curve

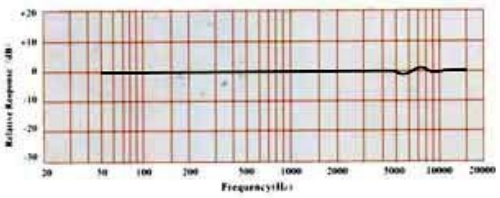

Schematic Diagram

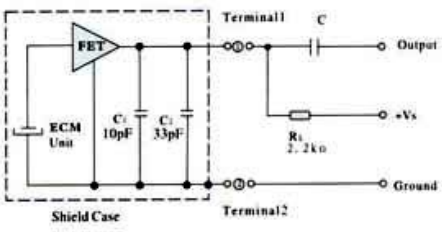

Microphones



9765LCR



9765PCR

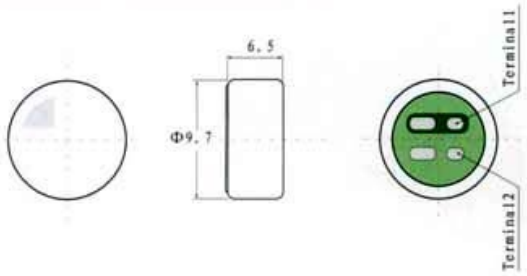

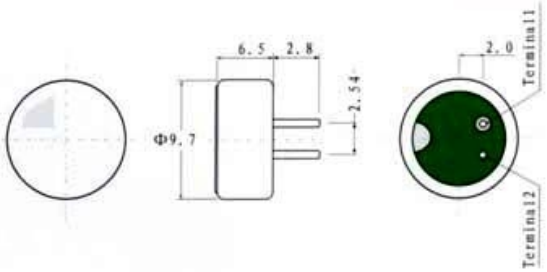

Specifications

Sensitivity :	-36～-50(dB)
Directivity :	Omnidirectional
Impedance :	Low impedance
Standard Operation Voltage :	2.0V DC
Current Consumption:	Max. 0.5mA
Sensitivity Reduction :	Within -3dB at 1.5V
S/N Ratio :	More than 58dB

Angular Response

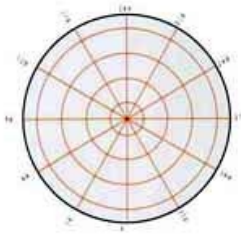

Typical Frequency Response Curve

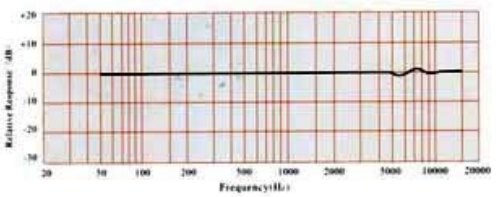

Schematic Diagram

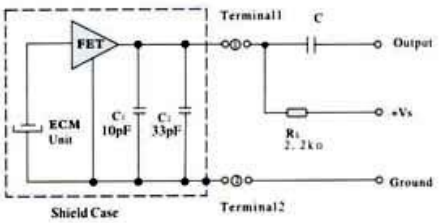

Microphones



6027LC

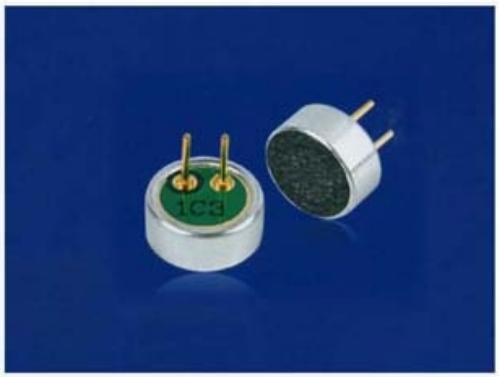

6027PC

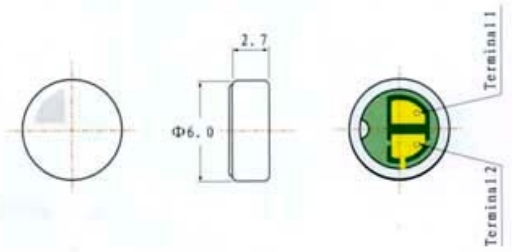

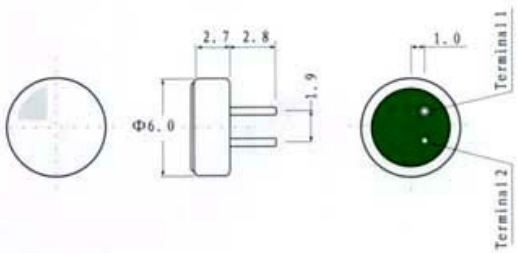

Specifications

Sensitivity :	-36～-50(dB)
Directivity :	Omnidirectional
Impedance :	Low impedance
Standard Operation Voltage :	2.0V DC
Current Consumption:	Max. 0.5mA
Sensitivity Reduction :	Within -3dB at 1.5V
S/N Ratio :	More than 58dB

Angular Response

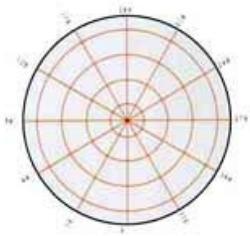

Typical Frequency Response Curve

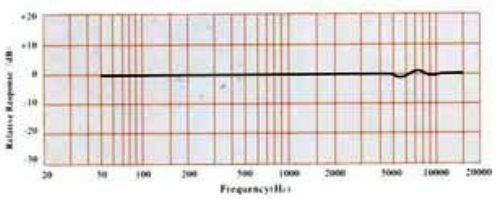

Schematic Diagram

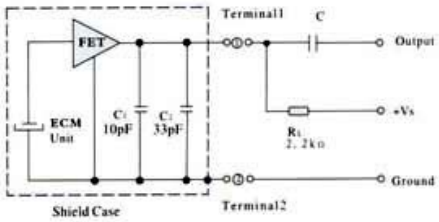

Microphones



6018UL



6022UL

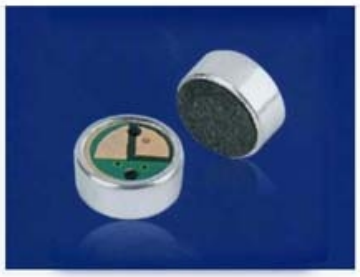

6027UL

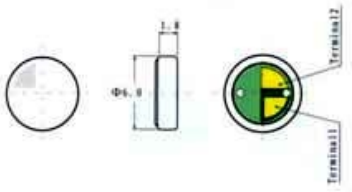

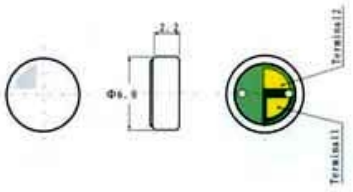

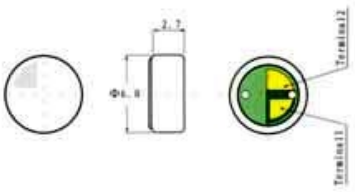

Specifications

Sensitivity :	-36～-50(dB)
Directivity :	Omnidirectional
Impedance :	Low impedance
Standard Operation Voltage :	2.0V DC
Current Consumption:	Max. 0.5mA
Sensitivity Reduction :	Within -3dB at 1.5V
S/N Ratio :	More than 58dB

Angular Response

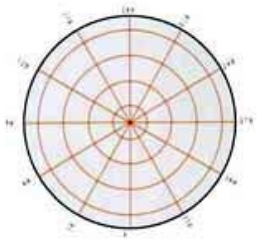

Typical Frequency Response Curve

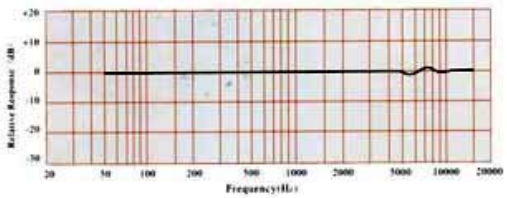

Schematic Diagram

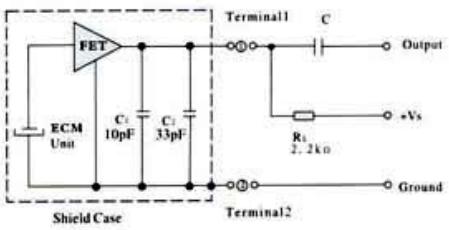

Microphones



6035LC



6035PC

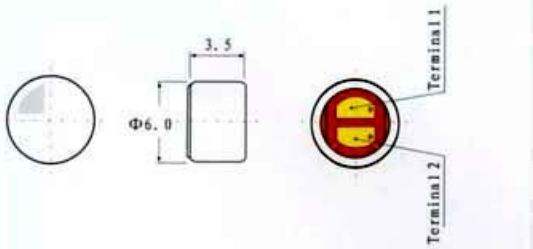

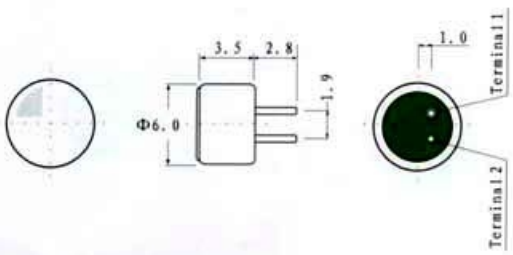

Specifications

Sensitivity :	-36～-50(dB)
Directivity :	Omnidirectional
Impedance :	Low impedance
Standard Operation Voltage :	2.0V DC
Current Consumption:	Max. 0.5mA
Sensitivity Reduction :	Within -3dB at 1.5V
S/N Ratio :	More than 58dB

Angular Response

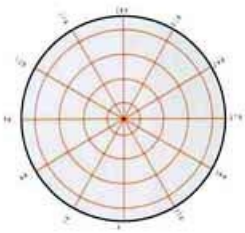

Typical Frequency Response Curve

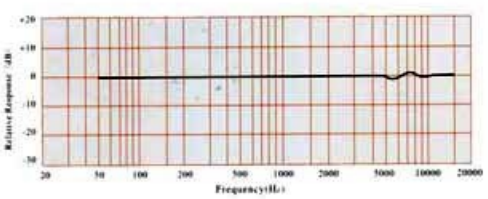

Schematic Diagram

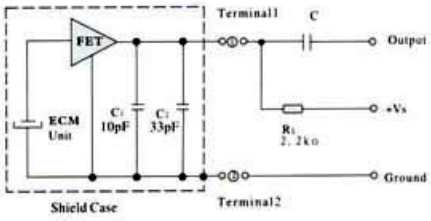

Microphones



6050L



6050P

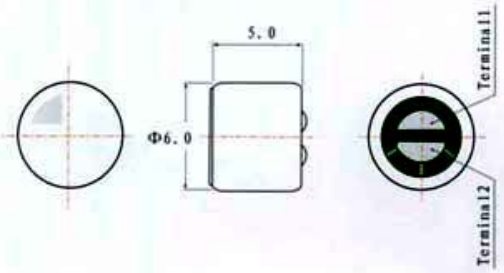

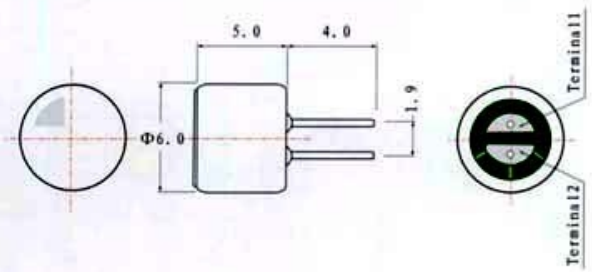

Specifications

Sensitivity :	-36～-50(dB)
Directivity :	Omnidirectional
Impedance :	Low impedance
Standard Operation Voltage :	2.0V DC
Current Consumption:	Max. 0.5mA
Sensitivity Reduction :	Within -3dB at 1.5V
S/N Ratio :	More than 58dB

Angular Response

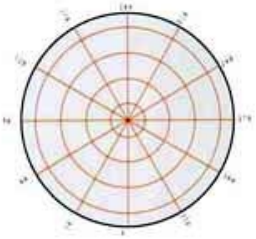

Typical Frequency Response Curve

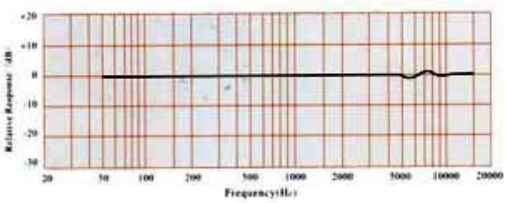

Schematic Diagram

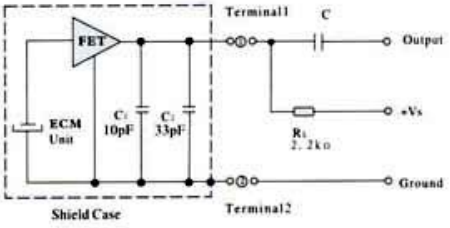

Microphones

III



6035NL



6050NL

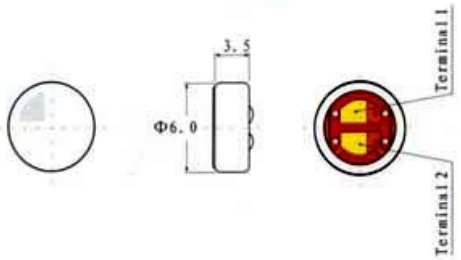

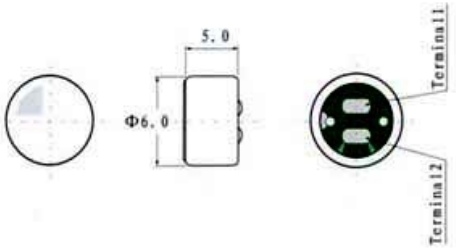

Specifications

Sensitivity :	-36～-50(dB)
Directivity :	Omnidirectional
Impedance :	Low impedance
Standard Operation Voltage :	2.0V DC
Current Consumption:	Max. 0.5mA
Sensitivity Reduction :	Within -3dB at 1.5V
S/N Ratio :	More than 58dB

Angular Response

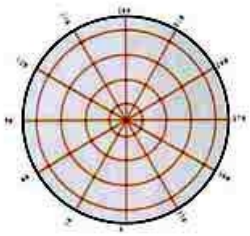

Typical Frequency Response Curve

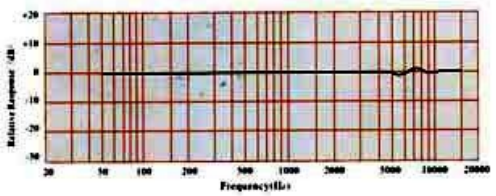

Schematic Diagram

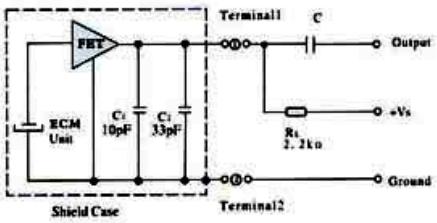

Microphones

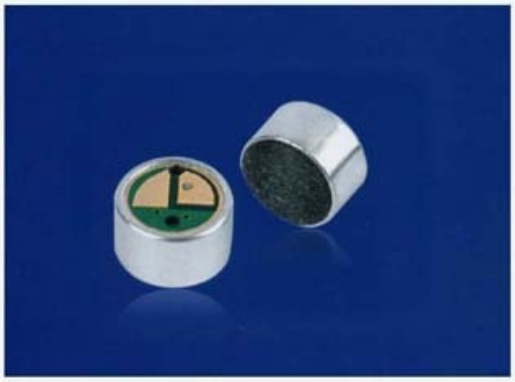

6035UL



6050UL

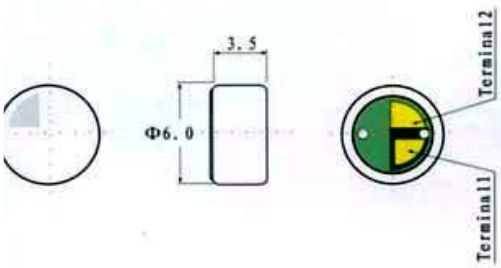

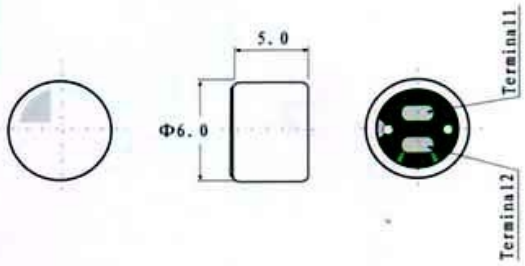

Specifications

Sensitivity :	-36~-50(dB)
Directivity :	Omnidirectional
Impedance :	Low impedance
Standard Operation Voltage :	2.0V DC
Current Consumption:	Max. 0.5mA
Sensitivity Reduction :	Within -3dB at 1.5V
S/N Ratio :	More than 58dB

Angular Response

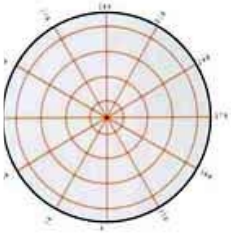

Typical Frequency Response Curve

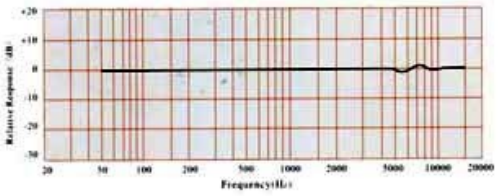

Schematic Diagram

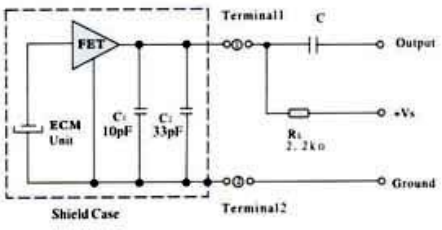

Microphones



9465L



9465P

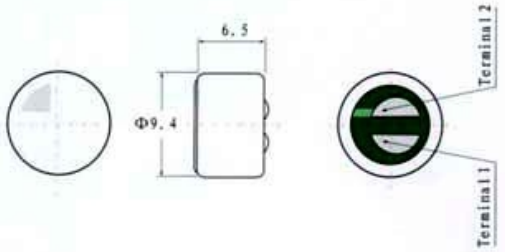

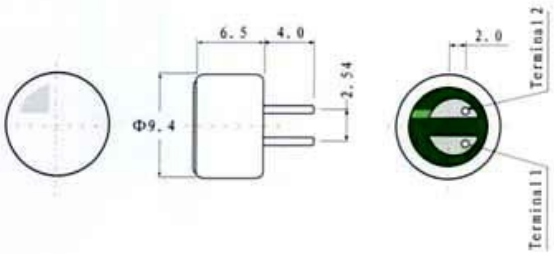

Specifications

Sensitivity :	-36～-50(dB)
Directivity :	Omnidirectional
Impedance :	Low impedance
Standard Operation Voltage :	2.0V DC
Current Consumption:	Max. 0.5mA
Sensitivity Reduction :	Within -3dB at 1.5V
S/N Ratio :	More than 58dB

Angular Response

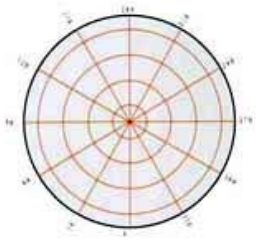

Typical Frequency Response Curve

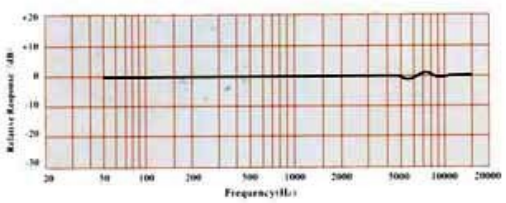

Schematic Diagram

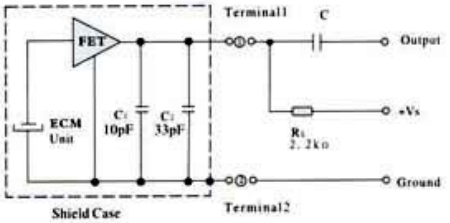

Microphones

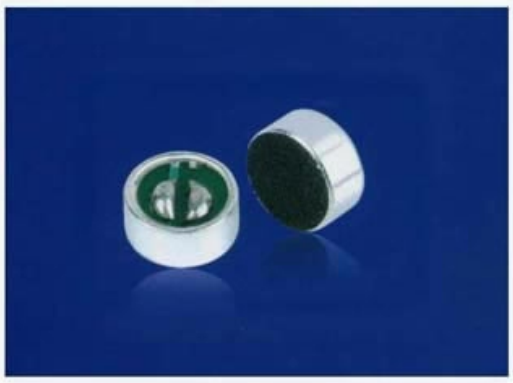



9745L

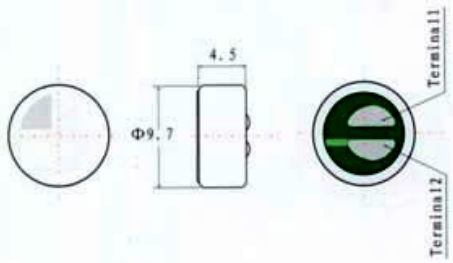

9745P

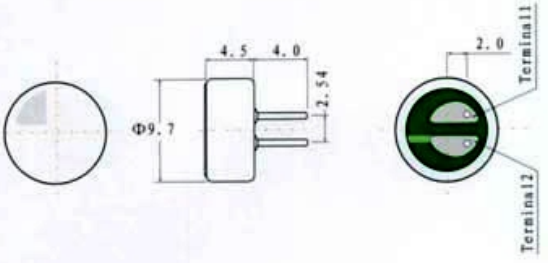

Specifications

Sensitivity :	-36～-50(dB)
Directivity :	Omnidirectional
Impedance :	Low impedance
Standard Operation Voltage :	2.0V DC
Current Consumption:	Max. 0.5mA
Sensitivity Reduction :	Within -3dB at 1.5V
S/N Ratio :	More than 58dB

Angular Response

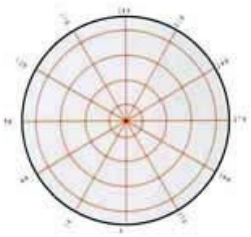

Typical Frequency Response Curve

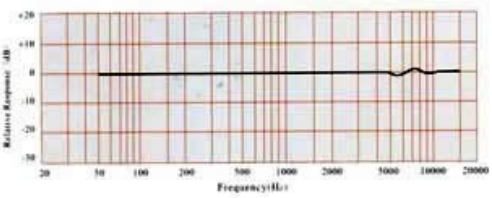

Schematic Diagram

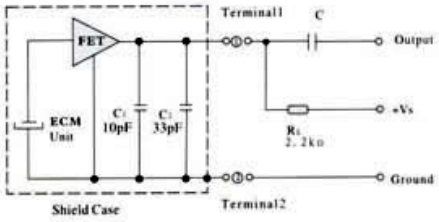

Microphones





9745LCR

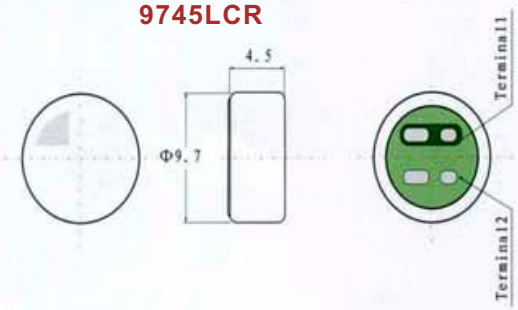

9745PCR

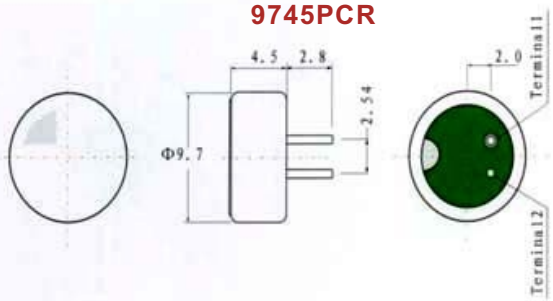

Specifications

Sensitivity :	-36～-50(dB)
Directivity :	Omnidirectional
Impedance :	Low impedance
Standard Operation Voltage :	2.0V DC
Current Consumption:	Max. 0.5mA
Sensitivity Reduction :	Within -3dB at 1.5V
S/N Ratio :	More than 58dB

Angular Response

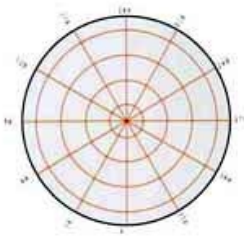

Typical Frequency Response Curve

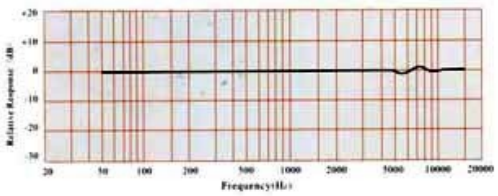

Schematic Diagram

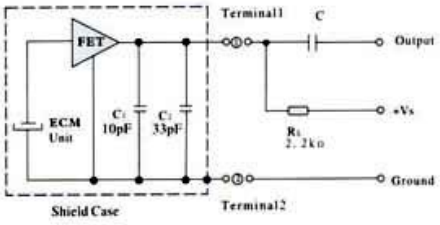

Microphones



9745UL



9750UL



9765UL

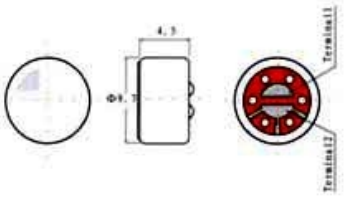

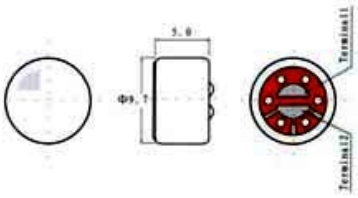

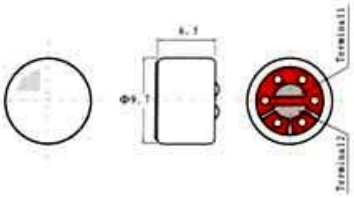

Specifications

Sensitivity :	-36～-50(dB)
Directivity :	Omnidirectional
Impedance :	Low impedance
Standard Operation Voltage :	2.0V DC
Current Consumption:	Max. 0.5mA
Sensitivity Reduction :	Within -3dB at 1.5V
S/N Ratio :	More than 58dB

Angular Response

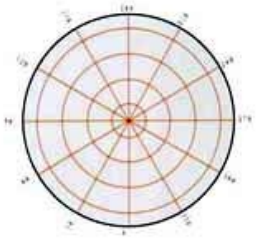

Typical Frequency Response Curve

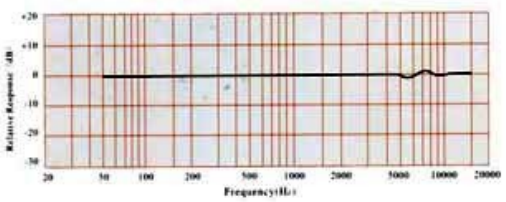

Schematic Diagram

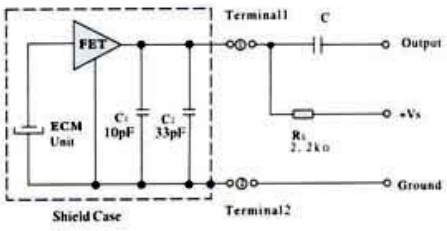

Microphones



9745NL



9750NL

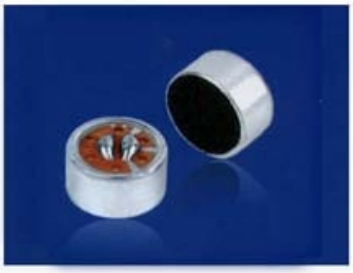

9765NL

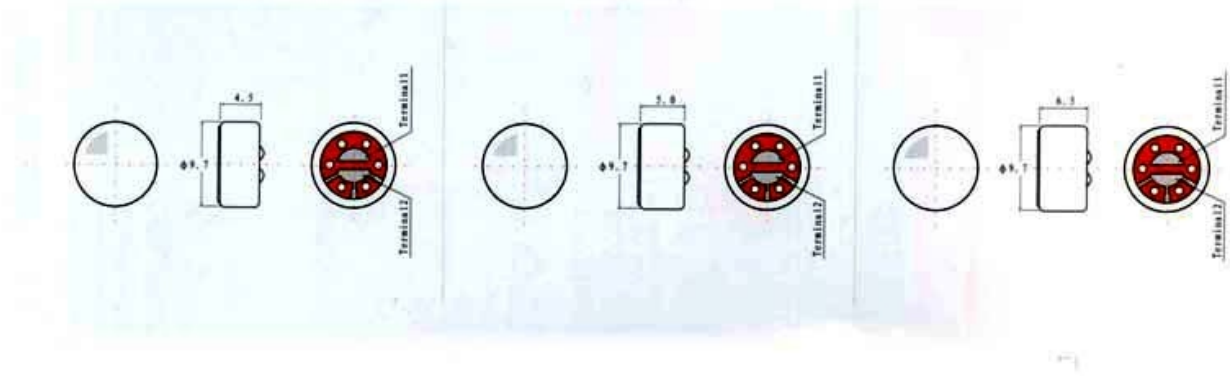

Specifications

Sensitivity :	-36～-50(dB)
Directivity :	Omnidirectional
Impedance :	Low impedance
Standard Operation Voltage :	2.0V DC
Current Consumption:	Max. 0.5mA
Sensitivity Reduction :	Within -3dB at 1.5V
S/N Ratio :	More than 58dB

Angular Response

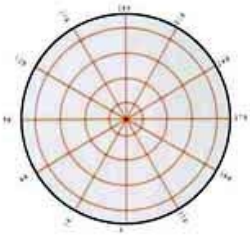

Typical Frequency Response Curve

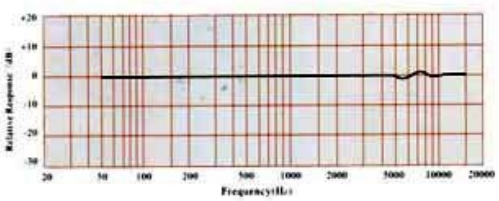

Schematic Diagram

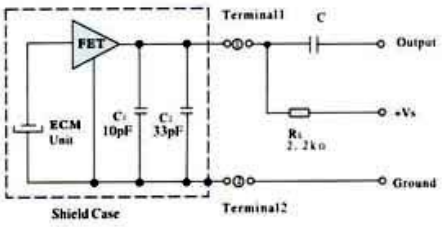

Microphones

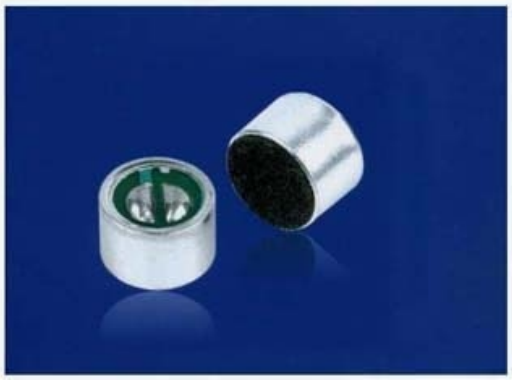

9765L

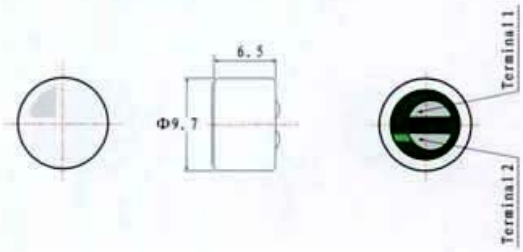



9765P

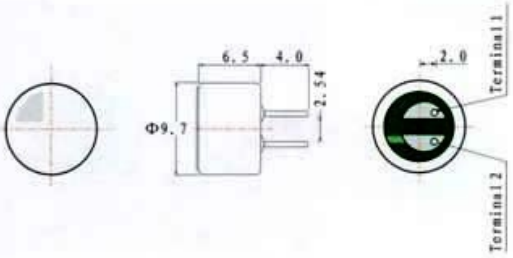

Specifications

Sensitivity :	-36~-50(dB)
Directivity :	Omnidirectional
Impedance :	Low impedance
Standard Operation Voltage :	2.0V DC
Current Consumption:	Max. 0.5mA
Sensitivity Reduction :	Within -3dB at 1.5V
S/N Ratio :	More than 58dB

Angular Response

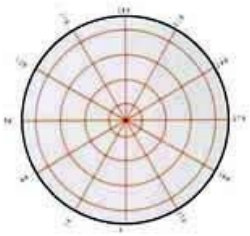

Typical Frequency Response Curve

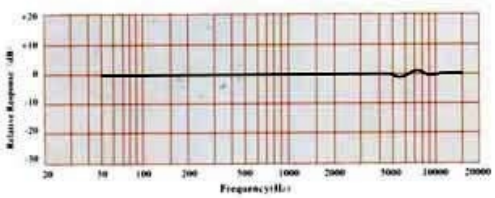

Schematic Diagram

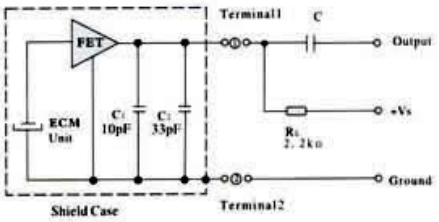

Microphones



6018LC



6018PC



6018SC

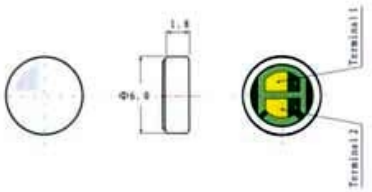

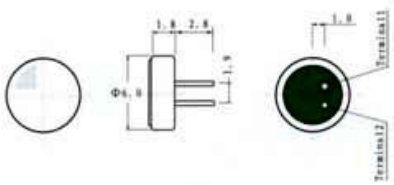

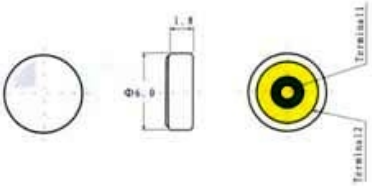

Specifications

Sensitivity :	-36～-50(dB)
Directivity :	Omnidirectional
Impedance :	Low impedance
Standard Operation Voltage :	2.0V DC
Current Consumption:	Max. 0.5mA
Sensitivity Reduction :	Within -3dB at 1.5V
S/N Ratio :	More than 58dB

Angular Response

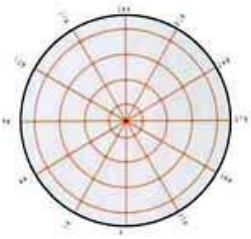

Typical Frequency Response Curve

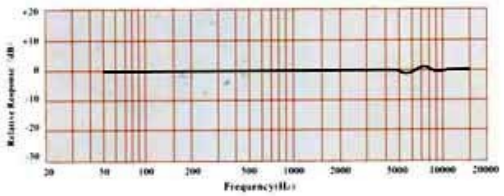

Schematic Diagram

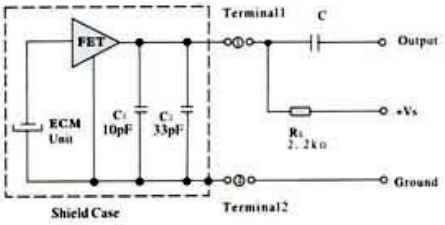

Receivers Dia. 13mm

III

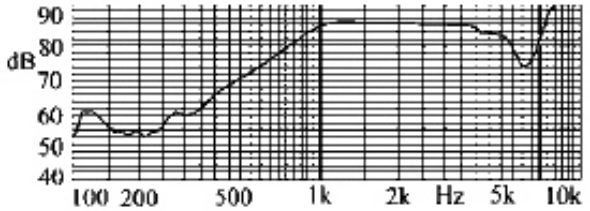

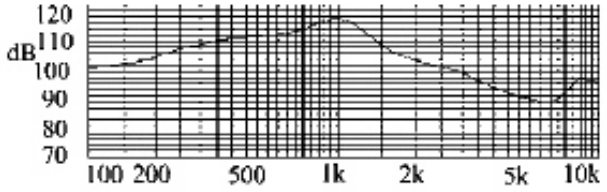



P/N:KLS3-R13-001

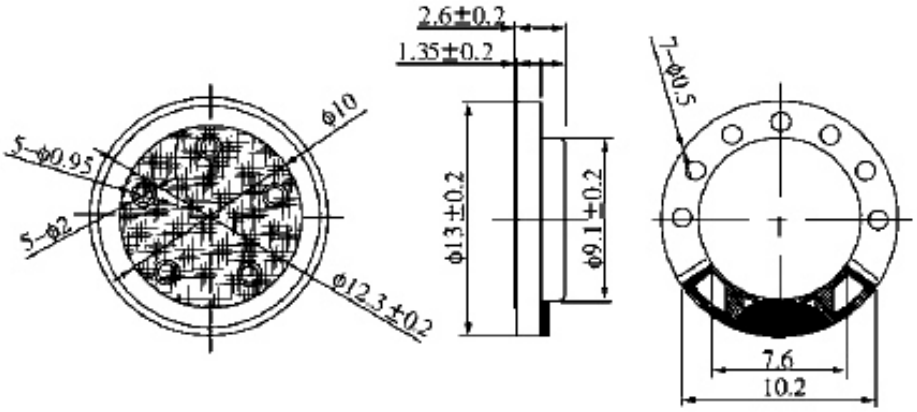

Type	Speaker	Receiver
Rated Lampedance	8Ω±15%	8Ω±15%
Rated Power	0.2W	10mW
Max Power	0.3W	30mW
Output S.P.L at 100mV	83±3dB	115±3dB
Resonant Frequency	1000±20%Hz	-
Frequency Response	FO~5KHz	300~3400Hz

Receivers Dia. 13mm wired

III

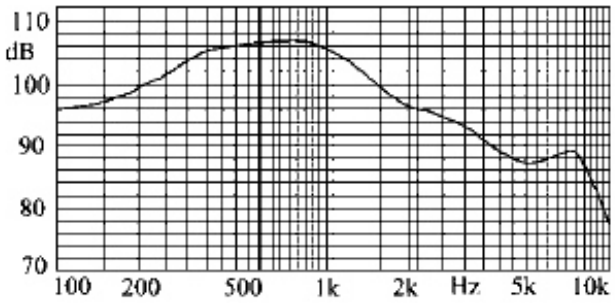

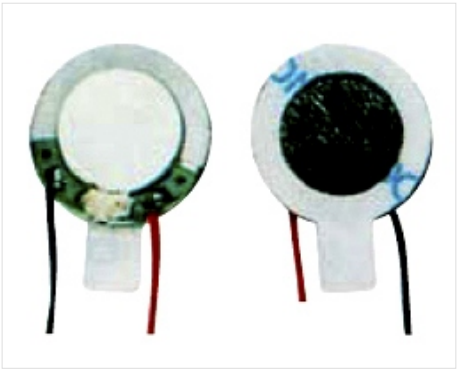

P/N:KLS3-R13-002L

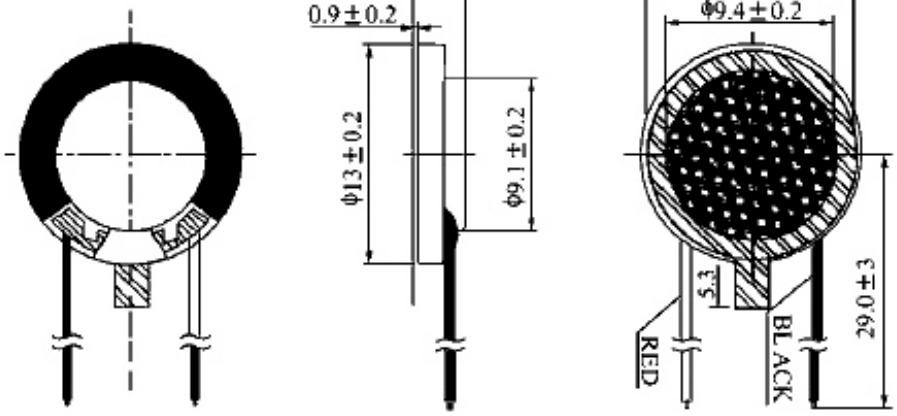

Rated Lampedance	32Ω±15%
Rated Power	10mW
Max Power	30mW
Output S.P.L at 100mV	105±3dB
Frequency Response	300~3400Hz

Receivers Dia. 13mm

III

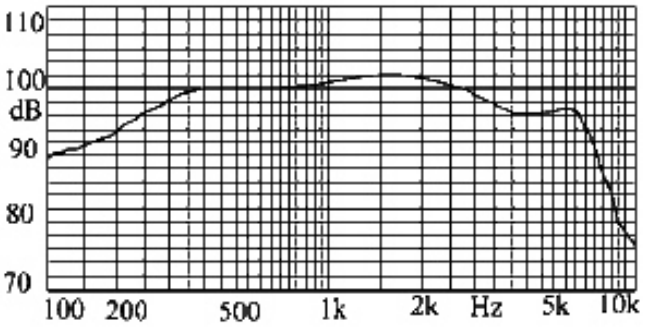



P/N:KLS3-R13-003

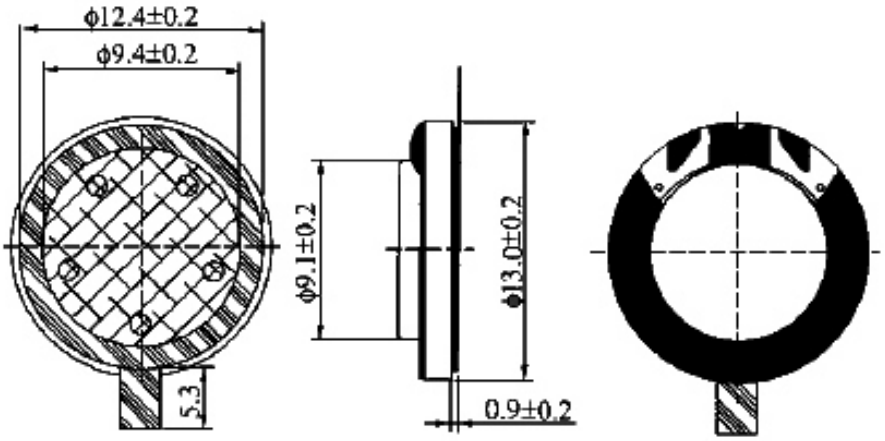

Rated Lampedance	32Ω±15%
Rated Power	10mW
Max Power	30mW
Output S.P.L at 100mV	99±3dB
Frequency Response	300~3400Hz

Receivers Dia. 15mm

III

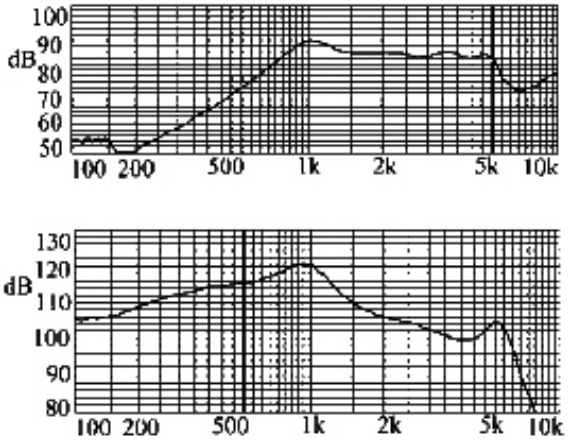



P/N:KLS3-R15-001

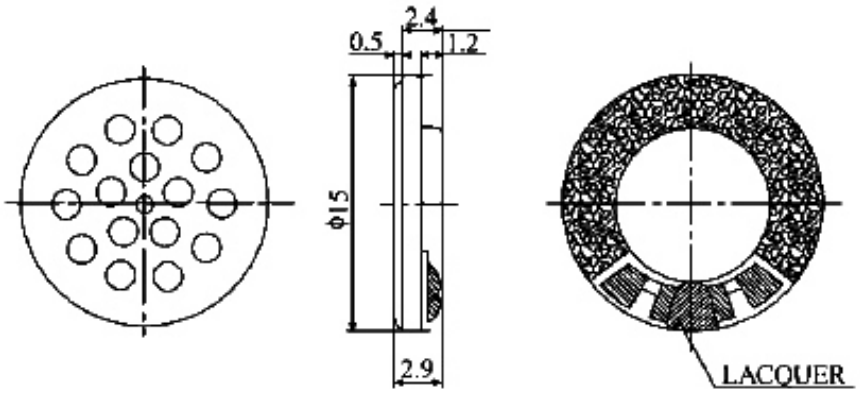

Type	Speaker	Receiver
Rated Lampedance	8Ω±15%	8Ω±15%
Rated Power	0.5W	50mW
Max Power	0.8W	100mW
Output S.P.L at 100mV	85±3dB	119±3dB
Resonant Frequency	920±20%Hz	-
Frequency Response	FO~10KHz	300~3400Hz

Receivers Dia. 15mm wired

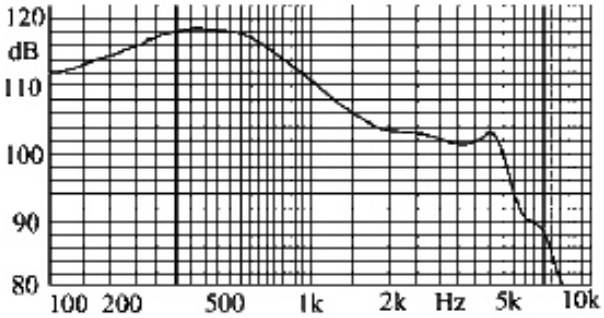

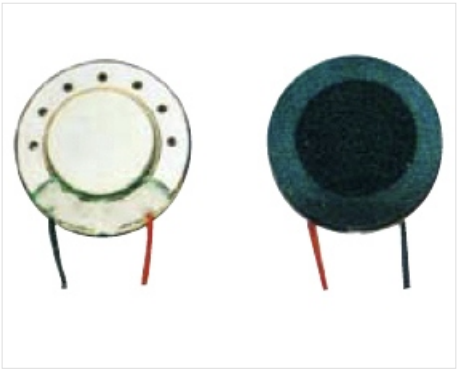

P/N:KLS3-R15-002L

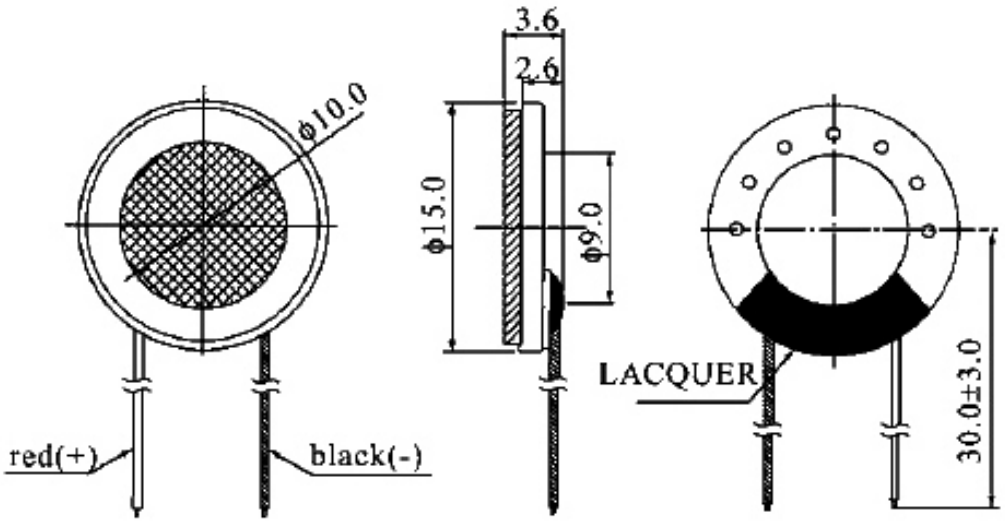

Rated Lampedance	32Ω±15%
Rated Power	10mW
Max Power	30mW
Output S.P.L at 100mV	111±3dB
Frequency Response	300~3400KHz

Receivers Dia. 15mm

III

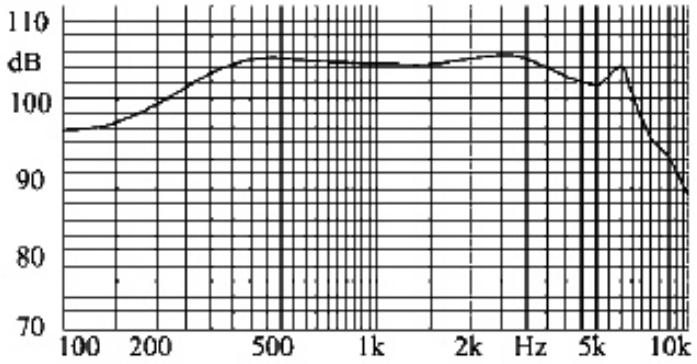

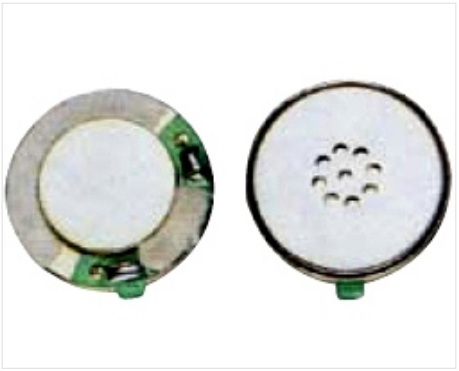

P/N:KLS3-R15-003

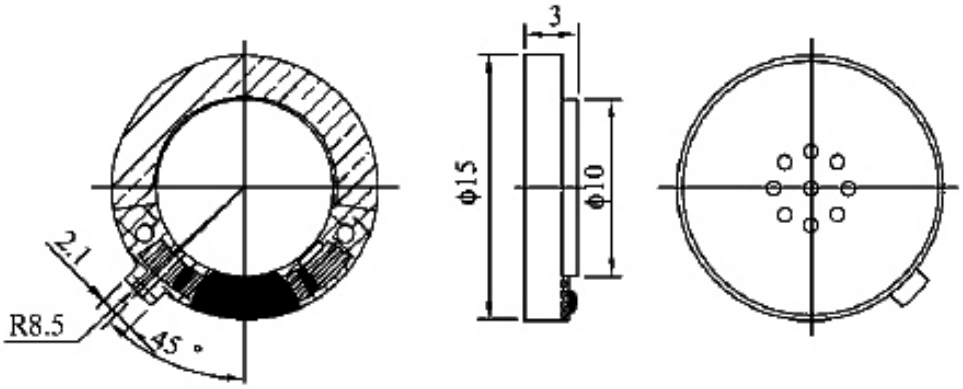

Rated Lampedance	32Ω±15%
Rated Power	10mW
Max Power	30mW
Output S.P.L at 100mV	104±3dB
Frequency Response	300~3400KHz

Receivers Size: 6x12mm

III

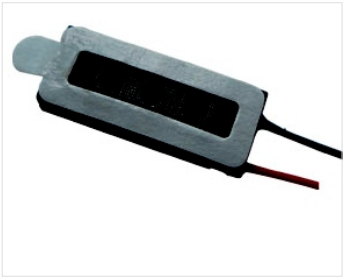

P/N: KLS3-R0612-001L

Specifications

Dimension(mm)	6*12*H2.6
Input Power(mW)	10
Max. Input Power(W)	20
Impedance(Ω)	32±15%@1kHz
S.P.L.（dB）	113±3dB(1kHz/179mV)
Frequency Rang（Hz）	300-3400
Operating temp.（℃）	-20~+60
Weight（g）	1.0
Material	SPCC

Frequency Response

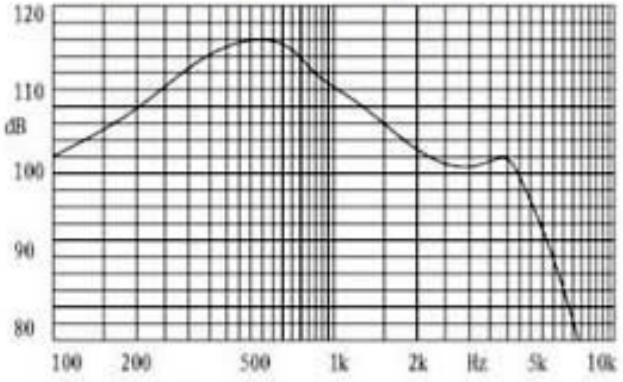

Dimensions

UNIT: mm

Tolerance: ±0.5mm

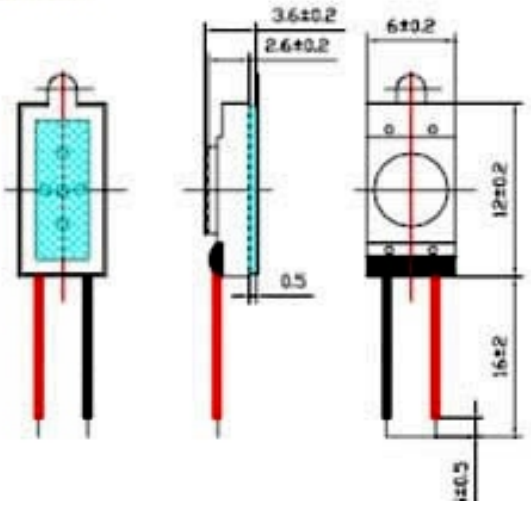

Receivers Size: 6x15mm

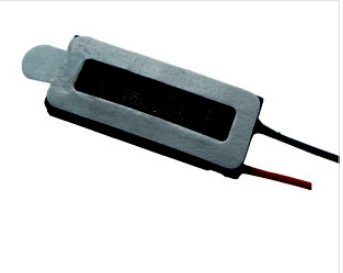

P/N: KLS3-R0615-001L

Specifications

Dimension(mm)	6*15*H2.8
Input Power(mW)	10
Max. Input Power(W)	20
Impedance(Ω)	32±15%@1kHz
S.P.L.（dB）	116±3dB(1kHz/179mV)
Frequency Rang（Hz）	300-3400
Operating temp.（℃）	-20~+60
Weight（g）	1.0
Material	SPCC

Dimensions

UNIT: mm
Tolerance: ±0.5mm

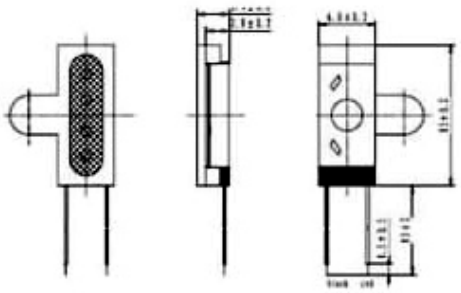

Frequency Response

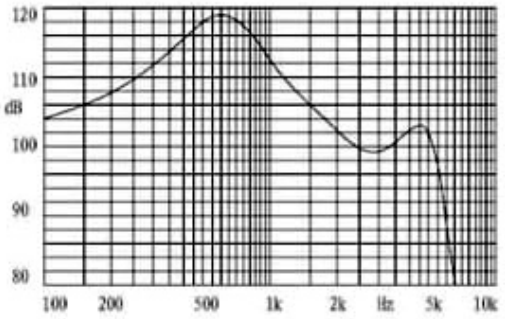

Receivers Size: 7. 5x11mm

III

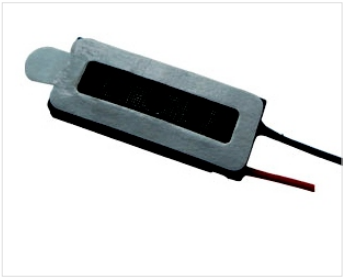

P/N: KLS3-R07511-001L

Specifications

Dimension(mm)	7.5*11*H2.7
Input Power(mW)	10
Max. Input Power(W)	20
Impedance(Ω)	32±15%@1kHz
S.P.L.（dB）	115±3dB(1kHz/179mV)
Frequency Rang（Hz）	300-3400
Operating temp.（℃）	-20~+60
Weight（g）	1.0
Material	SPCC

Dimensions

UNIT: mm

Tolerance: ±0.5mm

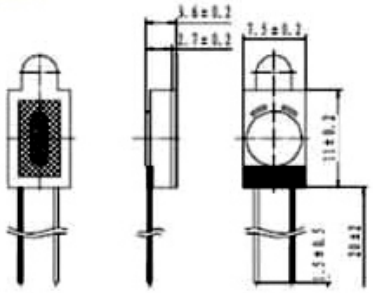

Frequency Response

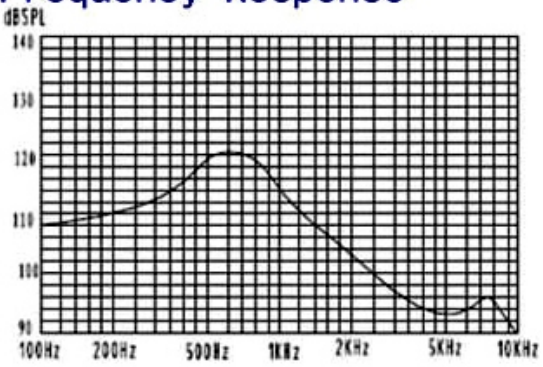

Tweeter driver

III



SDR001

- Magnet Weight: 15 oz
- Vioce Coil Size: 1 1/4"
- Diaphragm Material: ALUMINIUM
- Frequency Range: 1--16 kHz
- Sensitivity(1W/1M): 98 dB
- Power RMS/MAX: 50/100 W
- Impedance: 4 or 8 Ω
- FITS HORNS WITH1 3/8" *18 TPI THREADS



SDR002

- Magnet Weight: 23 oz
- Vioce Coil Size: 1 1/2"
- Diaphragm Material: CLOTH
- Frequency Range: 1--16 kHz
- Sensitivity(1W/1M): 103 dB
- Power RMS/MAX: 60/120 W
- Impedance: 4 or 8 Ω
- FITS HORNS WITH1 3/8" *18 TPI THREADS



SDR003

- Magnet Weight: 23 oz
- Vioce Coil Size: 1 1/2"
- Diaphragm Material: CLOTH
- Frequency Range: 1--18 kHz
- Sensitivity(1W/1M): 103 dB
- Power RMS/MAX: 60/120 W
- Impedance: 4 or 8 Ω
- FITS HORNS WITH1 3/8" *18 TPI THREADS



SDR004

- Magnet Weight: 23 oz
- Vioce Coil Size: 1 1/2"
- Diaphragm Material: CLOTH
- Frequency Range: 1--15 kHz
- Sensitivity(1W/1M): 97 dB
- Power RMS/MAX: 60/120 W
- Impedance: 4 or 8 Ω
- FITS HORNS WITH1 3/8" *18 TPI THREADS



SDR005

- Magnet Weight: 8 oz
- Vioce Coil Size: 1"
- Diaphragm Material: CLOTH
- Frequency Range: 1--18 kHz
- Sensitivity(1W/1M): 100 dB
- Power RMS/MAX: 30/60 W
- Impedance: 4 or 8 Ω
- FITS HORNS WITH1 3/8" *18 TPI THREADS



SDR006

- Magnet Weight: 42 oz
- Vioce Coil Size: 1 3/4"
- Diaphragm Material: ALUMINIUM
- Frequency Range: 1--16 kHz
- Sensitivity(1W/1M): 95 dB
- Power RMS/MAX: 100/200 W
- Impedance: 4 or 8 Ω
- FITS HORNS WITH1 3/8" *18 TPI THREADS



SDR007

- Magnet Weight: 38 oz
- Vioce Coil Size: 2"
- Diaphragm Material: TITANIUM
- Frequency Range: 1--18 kHz
- Sensitivity(1W/1M): 105 dB
- Power RMS/MAX: 100/200 W
- Impedance: 4 or 8 Ω
- FITS HORNS WITH1 3/8" *18 TPI THREADS

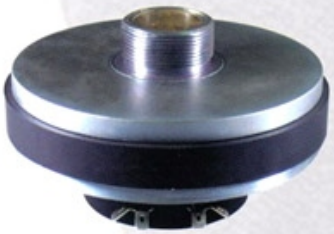

SDR008

- Magnet Weight: 28 oz
- Vioce Coil Size: 1 3/4"
- Diaphragm Material: TITANIUM
- Frequency Range: 1--18 kHz
- Sensitivity(1W/1M): 105 dB
- Power RMS/MAX: 100/200 W
- Impedance: 4 or 8 Ω
- FITS HORNS WITH ∅76*M4



SDR009

- Magnet Weight: 38 oz
- Vioce Coil Size: 2"
- Diaphragm Material: TITANIUM
- Frequency Range: 1--18 kHz
- Sensitivity(1W/1M): 9105 dB
- Power RMS/MAX: 100/200 W
- Impedance: 4 or 8 Ω
- FITS HORNS WITH1 3/8" *18 TPI THREADS

Tweeter driver

III



SDR010/SDR010S

- Pure Titanium diaphragm
- 150 Watts Max./ 13 Oz Magnet
- 1.35" Voice Coil/ 4~16 Ohm
- 1.5K-20K Hz /103dB/w/m



SDR011/SDR011S

- Pure Titanium Diaphragm
- 200 Watts Max./ 20 Oz Magnet
- 1.35" Voice Coil/ 4~16 Ohm
- 1.5K-20K Hz /100dB/w/m



SDR012/SDR012S

- Pure Titanium Diaphragm
- 200 Watts Max./ 30 Oz Magnet
- 1.75" Voice Coil/ 4~16 Ohm
- 1.5K-20K Hz /105dB/w/m



SDR013/SDR013S

- Pure Titanium Diaphragm
- 200 Watts Max./ 30 Oz Magnet
- 1.75" Voice Coil/ 4~16 Ohm
- 1.5K-20K Hz /103dB/w/m



SDR014/SDR014S

- Pure Titanium Diaphragm
- 350 Watts Max./ 60 Oz Magnet
- 3" Voice Coil/ 4~16 Ohm
- 1.5K-20K Hz /105dB/w/m



SDR015/SDR015S

- Pure Titanium Diaphragm
- 350 Watts Max./ 60 Oz Magnet
- 3" Voice Coil/ 4~16 Ohm
- 1.5K-20K Hz /105dB/w/m



SDR016S

- Flax Diaphragm
- 30 Watts Max.
- Nedymium Magnet
- 1" Voice Coil/ 4~16 Ohm
- 1.0K-21K Hz /105dB/w/m



SDR017S

- Piezo Tweeter Driver
- Max Power :100 Watts
- Impedance:4~16 Ohm
- 3.5K-23K Hz /105dB/w/m



SDR018S

- Piezo Tweeter Driver
- Max Power :150 Watts
- Impedance:4~16 Ohm
- 3.5K-23K Hz /105dB/w/m

* The model with "S" Fits Horns with 1 3/8" ×18 TPI Threads
* The model without "S" Fits Horns with Φ76×M4 or Φ54×M4

Hole & Handle & Horn & other accessory

Hole



BP-023
- 93×68×73×131mm

BP-024
- 110×75×96×150mm

BP-025
- 100×62×84×85mm

BP-026
- 81×55×70×109mm

BP-027
- 67×53×58×108mm



BP-028
- 63×47×52×108mm

BP-029
- 85×50×72×129mm

BP-030
- 75×44×65×132mm

BP-031
- 58×43×50×101mm

BP-032
- 80×52×72×108mm



BP-033
- 50×38×42×72mm

BP-034
- 50×33×42×70mm

BP-035
- 70×47×52×108mm

BP-036
- 99×78×83×115mm

BP-037
- 69×49×53×51mm



BP-038
- 69×49×53×51mm

BP-039
- 145×104×136×45mm

BP-040
- 118×76×108×45mm

BP-041
- 98×75×87×45mm



BP-042
- 126×104×114×45mm

BP-043
- 65×49×21mm

BP-045
- 146×89×40mm

BP-046
- 112×63×35mm

Hole & Handle & Horn & other accessory

Hole



BP-047
- 97×73×78×29mm



BP-048
- 70×50×54×25mm



BP-049



BP-050



BP-051



BP-052



BP-053



BP-054



BP-055



BP-056



BP-057



BP-058



BP-059



BP-060



BP-061
- 114×82.5×98×250mm



BP-062
- 61.5×42×54.4×140mm



BP-063
- 110×60.5×84×175mm



BP-064
- 133×80×113×190mm



BP-065
- Φ71×(155-220)mm



BP-066
- Φ75×44×42×52mm



BP-067
- Φ99×64×62×124mm



BP-068
- Φ108×69×67×100mm



BP-069
- Φ132×72×70×138mm



BP-070
- Φ165×106×104×110mm

Hole & Handle & Horn & other accessory

Hole



BP-001
(Old model:BP-1)
- 173×155×153mm



BP-002
(Old model:BP-2)
- 113×95×87mm



BP-003
(Old model:BP-3)
- 96×76×29mm



BP-004
(Old model:BP-4)
- 70×51×28mm



BP-005
(Old model:BP-5)
- 98×69×81×130mm



BP-006
(Old model:BP-6)
- 108×75×95×75mm



BP-007
(Old model:BP-7)
- 80×54×74×113mm



BP-008
(Old model:BP-8)
- 107×78×97×126mm



BP-009
(Old model:BP-9)
- 100×60×85×121mm



BP-010
(Old model:BP-10)
- 79×52×72×96mm



BP-011
(Old model:BP-11)
- 118×70×91×109mm



BP-012
- 120×99×103×128mm



BP-013
- 163×92×153×128mm



BP-014A
- 120×99×104×115mm



BP-015
- 157×100×149×130mm



BP-016
- 163×92×153×230mm



BP-017
- 86×69×74×120mm



BP-018
- 110×77×98×114mm



BP-019
- 120×71×106×126mm



BP-020
- 120×71×106×126mm



BP-021
- 87×71×76×101mm



BP-022
- 107×78×97×128mm

Hole & Handle & Horn & other accessory

Handle



BH-001
(Old model:BC-9B)
- 275×159mm



BH-002
(Old model:BC-9A)
- 275×159mm
- STEEL



BH-003
(Old model:BH-3)
- 162×209mm



BH-004
(Old model:BH-4)
- 190×230mm



BH-005
(Old model:BH-5)
- Φ190mm

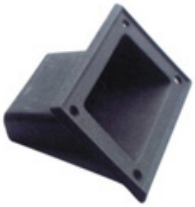

BH-006
(Old model:BC-6)
- 136×88mm

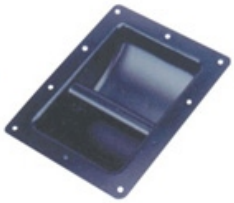

BH-007
(Old model:BC-9)
- 220×160mm
- STEEL



BH-008
(Old model:BH-8)
- 175×150mm



BH-009
(Old model:BH-9)
- 215×150mm



BH-010
- 170×94mm



BH-011
- 62×42mm



BH-012
- 90×65mm



BH-013
- 110×70mm



BH-014



BH-015
- 205×175mm



BH-016
- 158×158mm



BH-017
- (160+115)×160mm



BH-018



BH-019
- 125×74mm
- STEEL



BH-020
- 140×41mm
- STEEL



BH-021
- 178×127mm
- STEEL



BH-022
- 250×22mm

BH-023
- 220×22mm

BH-024
- 250×25mm



BH-025



BH-026
- 85×55mm

Hole & Handle & Horn & other accessory

Horn



H306
- 188×80×105mm



H410A
- 265×112×168mm



H410
- 265×112×168mm



H512
- 316×127×160mm



H515
- 388×130×160mm



H515B
- 384×122×181mm



H607
- 194×154×113mm



H612
- 307×152×117mm



H616
- 418×160×247mm



H617
- 420×160×220mm



H714
- 354×171×205mm



H714A
- 365×178×206mm



H715
- 395×182×155mm



H717
- 420×178×178mm



H809
- 240×198×147mm



H818
- 446×198×178mm



H1018
- 463×243×292mm



H1116
- 420×295×118mm



H505
- 120×120×80 mm



H606
- 150×150×85 mm

Hole & Handle & Horn & other accessory

Horn



H707
- 180×180×85mm



H707B
- 190×190×120mm

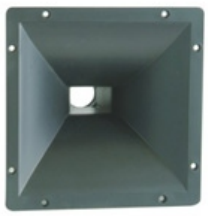

H808
- 215×215×144mm

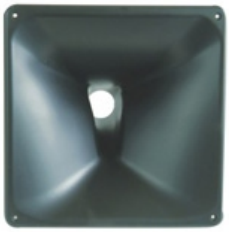

H1010
- 250×250×150mm



H707A
- 190×190×120mm



H606A
- 160×160×85mm



H6
- Φ6″



H7
- Φ7″

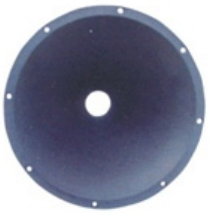

H8
- Φ8″



H10
- Φ10″

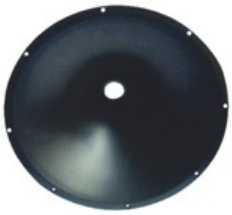

H12
- Φ12″



H15
- Φ15″

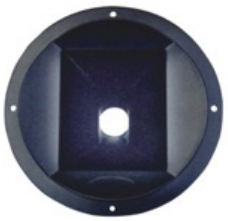

H6A
- Φ170×88mm

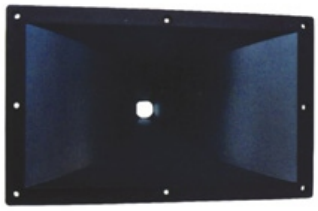

H813
- 320×198×210mm



H1022
- 570×250×290mm



H1212
- 280×280×265mm

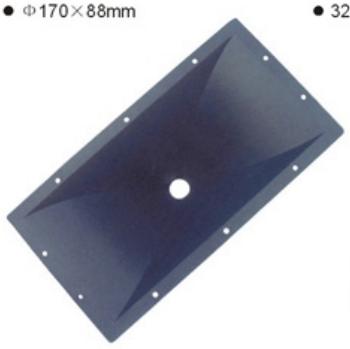

H917
- 430×230×210mm



H1212A
- 280×280×265mm



H606S
- 152×152×255mm



H406S
- 4″ ×6″



H415
- 380×90×250mm

Hole & Handle & Horn & other accessory

Corner



BC-001
(Old model:BC-1,BC-15)
- 56×56×52mm



BC-002
(Old model:BC-2)
- 43×43×60mm



BC-003
(Old model:BC-3,BC-13)
- 35×35×55mm



BC-004
(Old model:BC-6)
- 40×40×40mm
- METAL



BC-005
(Old model:BC-5)
- 38×38×38mm
- METAL



BC-006
- 40×40×40mm
- METAL



BC-007
(Old model:BC-7)
- 40×40×40mm
- METAL



BC-008
(Old model:BC-8)
- 50×50×70mm
- METAL



BC-009
- 60×60×90mm



BC-010
(Old model:BC-10)



BC-011
(Old model:BC-11)



BC-012
(Old model:BC-12)
- 45×45×70mm



BC-013
- 50×50×70mm



BC-014
(Old model:BC-14)
- 50×50×80mm



BC-015
- 40×40×40mm



BC-016
- 30×30×50mm



BC-017
- 51×51×86mm



BC-018



BC-019



BC-020



BC-021



BC-022



BC-023



BC-024



BC-025



BC-026



BC-027



BC-028



BC-029



BC-030

Hole & Handle & Horn & other accessory

III

Grill



GR-001
- Steel grille with hexagon hole
- ○ 7mm(3″ -21″)



GR-002
- Steel grille with round hole
- Φ2mm(3″ -18″)



GR-003
- Steel grille with square hole
- 8mm×8mm(3″ -21″)



GR-004
- Steel grille with round hole
- Φ8mm(3″ -21″)



GR-005
- Steel grille with round hole
- Φ1.5mm(3″ -12″)



GR-006
- Steel grille with rhombic hole
- (3″ -21″)

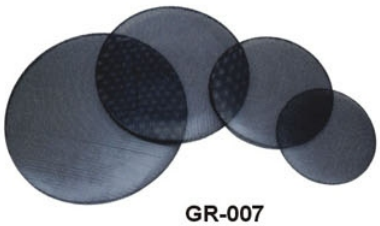

GR-007
- Steel grille with fold edge
- (3″ -15″)



GR-008
- Steel grille with steel edge
- (5.5″ -15″)



GR-009
- Plastic grille
- (8″ -12″)



GR-010
- Steel grille with sunk centre
- (8″ -15″)



GR-011
- Square hole steel grille and steel ring
- (5.5″ -15″)



GR-012
- Round hole steel grille and steel ring
- (5.5″ -15″)



GR-013
- Square hole steel grille with fold edge
- 5mm×5mm(5″ -10″)

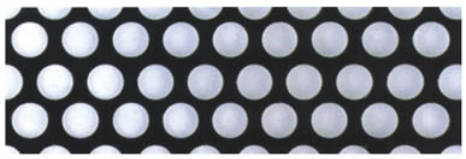

GR-014
- Φ1.0mm-Φ8.0mm

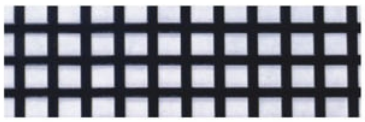

GR-015
- □1.2mm-□9.2mm



GR-016
- ◇2.0mm-◇6.5mm

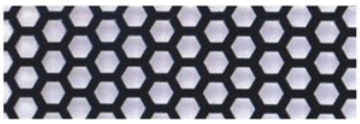

GR-017
- ○5.0mm-○7.0mm

Hole & Handle & Horn & other accessory

III

Feet Mounting Hardwares



BF-001
- Φ18×10mm

BF-002
- Φ23×12mm

BF-003
- Φ32×13mm

BF-004
- Φ36×22mm

BF-005
- Φ39×19mm

BF-006
- Φ35×35mm



BF-007
- Φ38×10mm

BF-008
- Φ40×45mm

BF-009
- Φ30×18mm

BF-010
- Φ38×15mm

BF-011
- STEEL

BF-012
- STEEL

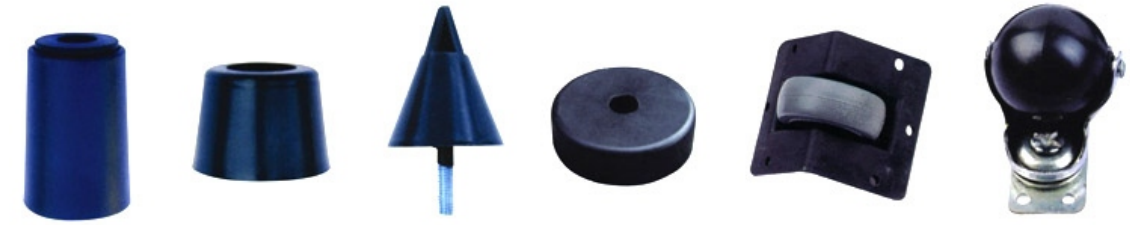

BF-013
- Φ31×46mm

BF-014
- Φ29×22mm

BF-015
- 40×50×6mm

BF-016
- Φ50×15mm

BF-017
- 58×58×70mm

BF-018



BF-019

BF-020

MH001
- M6×37mm

MH002
- M5×25mm

MH003
- M4×25mm



MH004
- M4×25mm

MH005
- M4×25mm

MH006
- M4

MH007



MH008

MH009

MH010

MH011

MH012

Manual MP3 decoder board

一、（Introduction）

A highly integrated single-chip multimedia MP3 audio decoders, an increase of extracellular signal switch, USB / SD switch, digital display more convenient intuitive to operate; and add a radio function, so that more extensive programs; more enhanced U disk and SD compatibility. The products are widely used in home music center, car audio and computer multimedia audio, professional audio active, IPOD stereo, mini stereo, AV amplifier, massage chairs, electronic gifts, electronic toys. This product has been in mass production, stable performance.

Note: The MP3 format can only decode, and WMA format files can not be decoded.

二、Features

- 3.3V ~ 5V single power supply (working voltage is 3.3V ~ 5V)
- You can add 7805 to support 12V step-down IC
- Support USB, SD, MMC cards for playback
- Support FAT12, FAT16 file system
- Support MP1 Layer3, MP2 Layer3, MP3 Layer3 version of the song
- Supports 8-448kbps in the MP3 songs
- Support AUX (for connecting external audio, and can be remote control or buttons to control external audio volume)
- Support from the direct signal switch, USB / SD card directly to switch, and external audio volume control
- With digital display
- With FM (with FM radio, can automatically scan, storage units)
- With 3W amplifier (with power amplifier features directly connected to the speakers can play music, the output power 3W)
- Power-down memory (when powered off, re-energized, when power will play the songs)
- Volume memory (when the power play, the volume in front of a shutdown as)
- Music player remote control (with remote control can control all playback functions)
- Repeat

三、Panel keys description



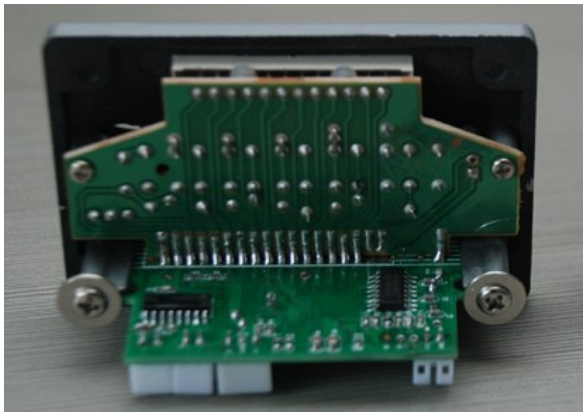

1、 PREV/VOL-: In USB / SD playback on this button for the song. FM radio state in the choice of a press station. Press the volume reduction.

2、 PLAY / PAUSE: in USB / SD player status is play / pause. Press to enter the state radio station automatic search (AUX state useless.)

3、 **NEXT / VOL +: In USB / SD playback on a song for the Press; in the state short by FM radio to select the next station. Press the volume increase.**

4、 PPT: Press once to open the single cycle, single cycle again to cancel.

5、 EQ: sound field mode NORMAL → JAZZ → ROCK → POP → CLASSIC → COUN switch.

6、 MODE: Press this key to cycle through the input USB → SD / MMC → AUX → FM. USB playback, the display "USB" light; SD / MMC playback, the display "SD" light; AUX state, display "AUX" light; FM state, the display "FM" lit.

四、Remote control button that



1、 : **In the work under long press shutdown; the power off press power.**

2、 

: Press this key to cycle through the input USB → SD / MMC → AUX → FM. USB playback, the display "USB" light; SD / MMC playback, the display "SD" light; AUX state, display "AUX" light; FM state, the display "FM" lit.

3、 : Mute。

4、 : In USB / SD status, play / pause. Long press to enter the radio status automatically search station

5、 : In USB / SD playback this button to select the song. FM state in the radio manual to lower short-time radio. (AUX state useless)

6、 : In USB / SD playback this button to choose the next song. FM radio state in a short time to manually fine-tune the radio up. (AUX state useless)

7、 

: sound field mode. NORMAL → JAZZ → ROCK → POP → CLASSIC → COUN.

8、 

: Volume down

9、 

: :Volume increase

10、 

: Song cycle.

11、 

: In MP3 mode to switch between USB SD; in radio mode, auto channel search.

12、 0 ~ 9: USB / SD button to do directly, more than 10 consecutive digital input can be selected. Saved in the selected radio station FM state.

五、Decoders connected instructions (201105 model)



六、 Product Image





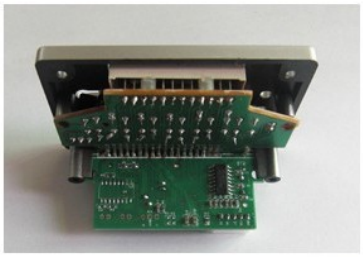



Mechanical Buzzer Series

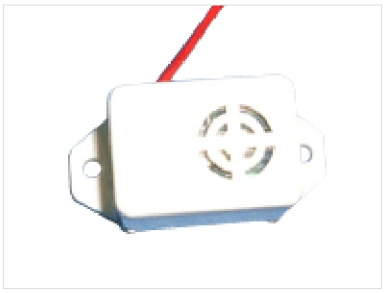

SPECIFICATION

. Resonant Frequency .....400±100Hz
. Response Time.....≤50ms
. Case Material .....ABS
. Operating Temperature .....-20 ~ +60℃
. Store Temperature .....-30 ~ +70℃
. Weight 10g

Dimension: mm

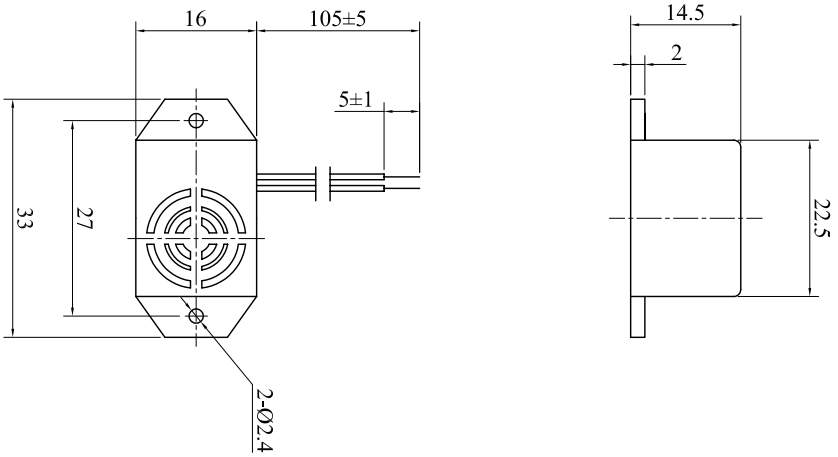

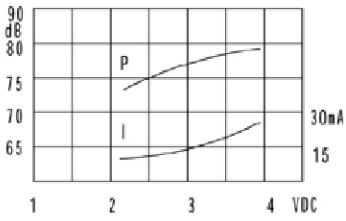

2203L

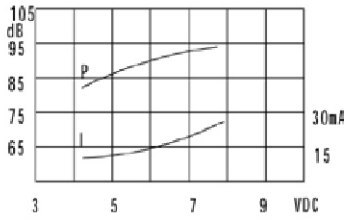

2206L

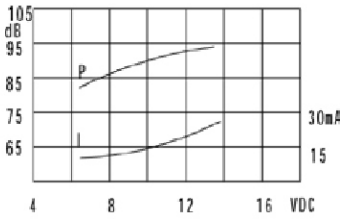

2209L

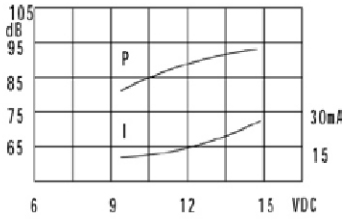

2212L

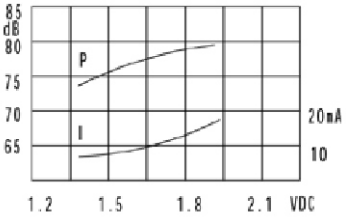

2215L

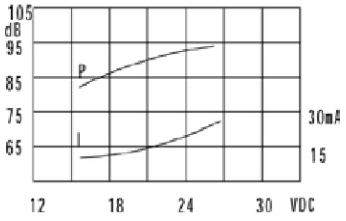

2224L

All part No. for choice:

Procuts Name	Rated Voltage	Max.Rated Current	Min.Sound Pressure Level	Resonant Frequency	D(mm)	H(mm)
KLS3-MB-2203L	3VDC	30mA at 3VDC	75dB at 3VDC/20cm	400±100Hz	22.5×16	14.5
KLS3-MB-2206L	6VDC	30mA at 6VDC	75dB at 6VDC/20cm	400±100Hz	22.5×16	14.5
KLS3-MB-2209L	9VDC	30mA at 9VDC	80dB at 9VDC/20cm	400±100Hz	22.5×16	14.5
KLS3-MB-2212L	12VDC	30mA at 12VDC	80dB at 12VDC/20cm	400±100Hz	22.5×16	14.5
KLS3-MB-2215L	1.5VDC	20mA at 1.5VDC	70dB at 1.5VDC/20cm	400±100Hz	22.5×16	14.5
KLS3-MB-2224L	24VDC	30mA at 24VDC	80dB at 24VDC/20cm	400±100Hz	22.5×16	14.5

Mechanical Buzzer Series



III

SPECIFICATION

. Resonant Frequency .....400±100Hz
. Response Time.....≤50ms
. Case Material .....ABS
. Operating Temperature .....-20 ~ +60℃
. Store Temperature .....-30 ~ +70℃
. Weight 10g

Dimension : mm

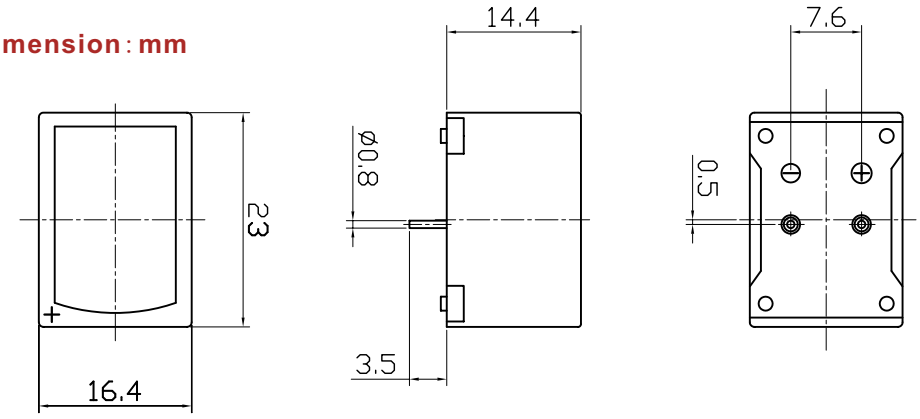

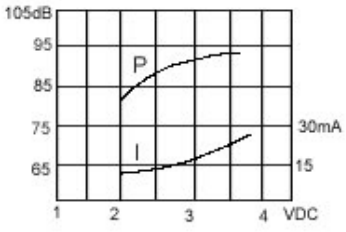

2203P

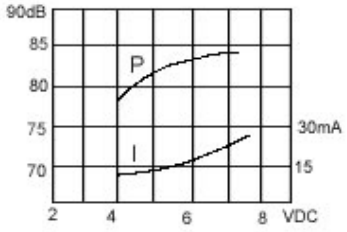

2206P

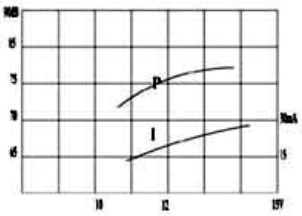

2212P

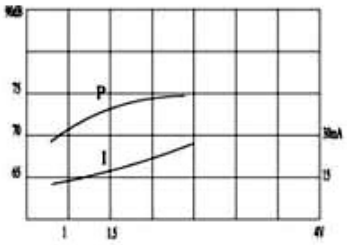

2215P

All part No. for choice:

Procuts Name	Rated Voltage	Max.Rated Current	Min.Sound Pressure Level	Resonant Frequency	D(mm)	H(mm)
KLS3-MB-2203P	3VDC	30mA at 3VDC	70dB at 3VDC/20cm	400±100Hz	23×16.4	14.4
KLS3-MB-2206P	6VDC	30mA at 6VDC	75dB at 6VDC/20cm	400±100Hz	23×16.4	14.4
KLS3-MB-2212P	12VDC	30mA at 12VDC	75dB at 12VDC/20cm	400±100Khz	23 x 16.4	14.4
KLS3-MB-2215P	1.5VDC	30mA at 1.5V	70dB at1.5VDC/20cm	400±100Khz	23 x 16.4	14.4

Mechanical Buzzer Series

KLS3-MB-2314 23*16. 4*14. 4mm Mechanical Buzzer

SPECIFICATIONS

Rated Voltage	3VDC
Operating Voltage	2-4VDC
Max.Rated Current	30mA at 3VDC
Min.S.P.L. (@ 20cm)	70dB
Resonant Frequency	400 ± 100Hz
Operating Temp	-20 ~ +60 ° C
Weight	10g



Dimensions (Unit:mm)

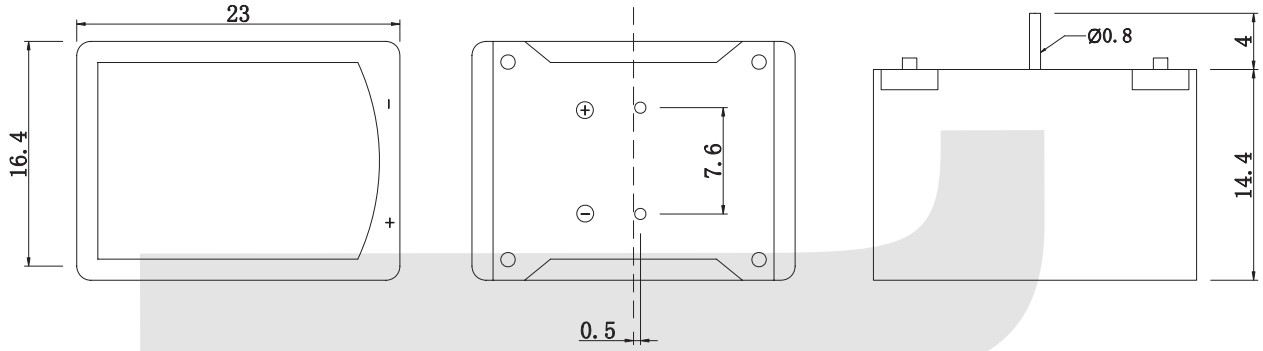

Order Code	Rated Voltage	Min.S.P.L.(@20cm)
KLS3-MB-2314-A	1.5VDC	70dB
KLS3-MB-2314-B	3VDC	70dB
KLS3-MB-2314-C	6VDC	75dB
KLS3-MB-2314-D	9VDC	75dB
KLS3-MB-2314-E	12VDC	80dB
KLS3-MB-2314-F	24VDC	80dB

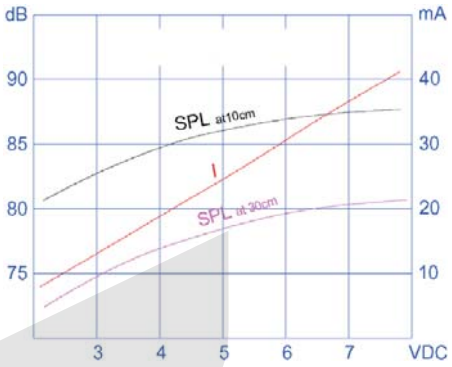

ORDER INFORMATION

Product NO.: KLS3-MB-2314 A

- KLS3-MB-2314: Part Number / Mechanical Buzzer Series
- A: Rated Voltage / Dimensions

Mechanical Buzzer Series

KLS3-MB-2315K 23*17*15mm Mechanical Buzzer Series

SPECIFICATIONS

Rated Voltage	3VDC
Operating Voltage	2-5VDC
Max.Rated Current	25mA
Min.S.P.L. (@ 20cm)	75dB
Resonant Frequency	400 ± 100Hz
Operating Temp	-20 ~ +60 ° C
Weight	10g



Dimensions (Unit:mm)

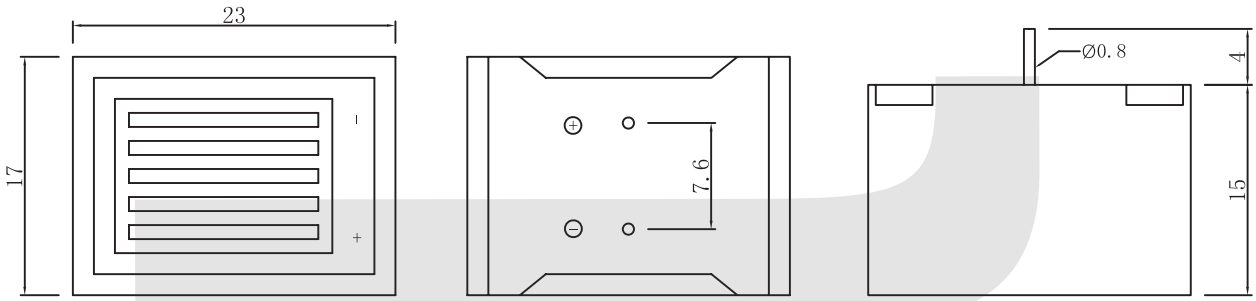

Order Code	Rated Voltage	Min.S.P.L.(@20cm)
KLS3-MB-2315K-A	1.5VDC	70dB
KLS3-MB-2315K-B	3VDC	75dB
KLS3-MB-2315K-C	6VDC	75dB
KLS3-MB-2315K-D	9VDC	75dB
KLS3-MB-2315K-E	12VDC	75dB
KLS3-MB-2315K-F	24VDC	75dB

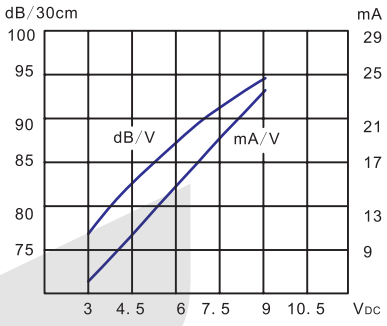

ORDER INFORMATION

Product NO.: KLS3-MB-2315K A

- Part Number
- Mechanical Buzzer Series
- Diameter
- Rated Voltage
- Dimensions

Mechanical Buzzer Series

KLS3-MB-2315R 23*17*15mm Mechanical Buzzer Series

SPECIFICATIONS

Rated Voltage	3VDC
Operating Voltage	2-4VDC
Max.Rated Current	25mA
Min.S.P.L. (@ 20cm)	75dB
Resonant Frequency	400 ± 100Hz
Operating Temp	-20 ~ +60 ° C
Weight	10g



Dimensions (Unit:mm)

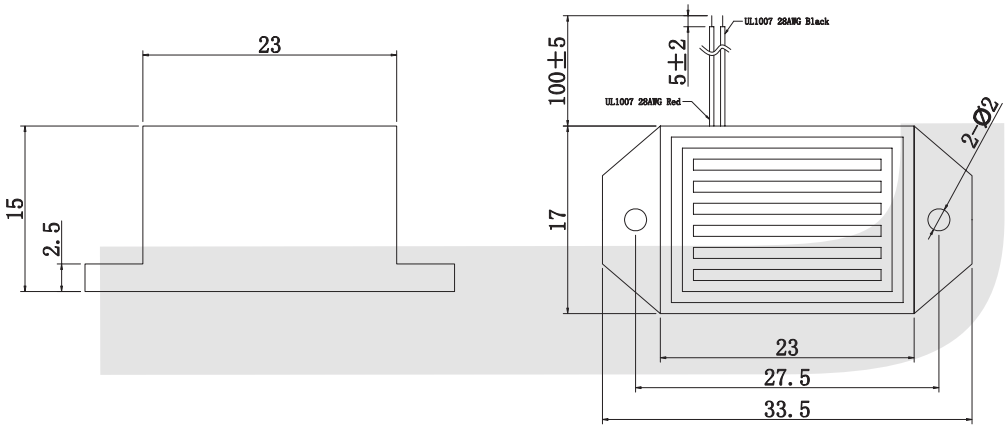

Order Code	Rated Voltage	Min.S.P.L.(@20cm)
KLS3-MB-2315R-A	1.5VDC	70dB
KLS3-MB-2315R-B	3VDC	75dB
KLS3-MB-2315R-C	6VDC	75dB
KLS3-MB-2315R-D	9VDC	75dB
KLS3-MB-2315R-E	12VDC	75dB
KLS3-MB-2315R-F	24VDC	75dB

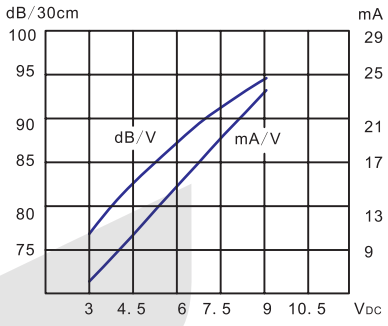

ORDER INFORMATION

Product NO.: KLS3-MB-2315R A

- KLS3-MB-2315R: Part Number
- MB: Mechanical Buzzer Series
- 2315R: Diameter / Dimensions
- A: Rated Voltage

Mechanical Buzzer Series

KLS3-MB-2323 25*23*19mm Mechanical Buzzer Series

SPECIFICATIONS

Rated Voltage	220 VAC
Operating Voltage	160-260VAC
Max.Rated Current	30mA
Min.S.P.L. (@ 20cm)	78dB
Common Terminal Bear Pulling Force	⩽9Kg
Operating Temp	-20 ~ +80 ° C
Weight	18g



Dimensions (Unit:mm)

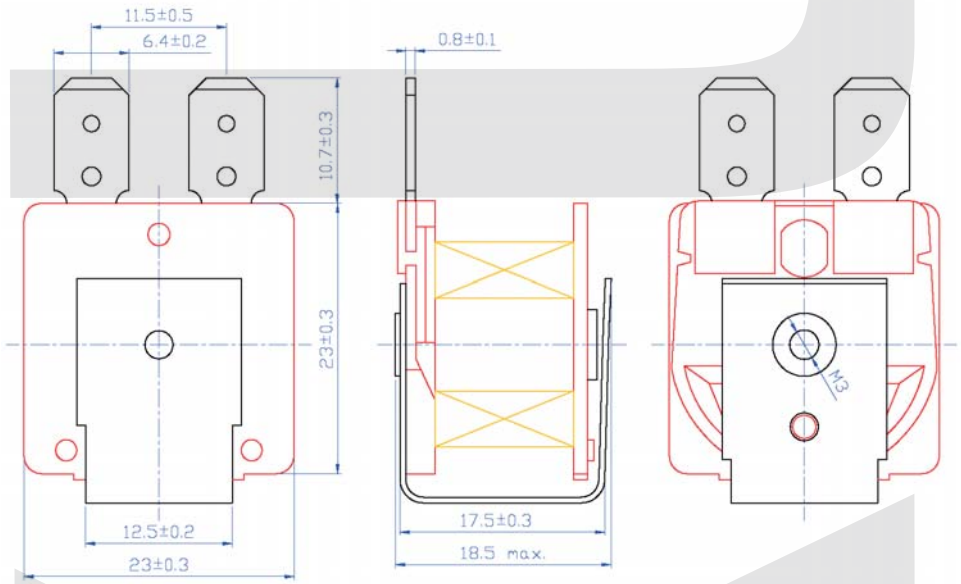

ORDER INFORMATION

Product NO.: KLS3-MB-2323 A

- KLS3-MB: Part Number / Mechanical Buzzer Series
- 2323: Dimensions
- A: Rated Voltage

Mechanical Buzzer Series

KLS3-MB-2618 26*17. 6mm Mechanical Buzzer Series

SPECIFICATIONS

Rated Voltage	3VDC
Operating Voltage	2-4VDC
Max.Rated Current	30mA
Min.S.P.L. (@ 20cm)	80dB
Resonant Frequency	400 ± 100Hz
Operating Temp	-20 ~ +60 ° C
Weight	12g



Dimensions (Unit:mm)

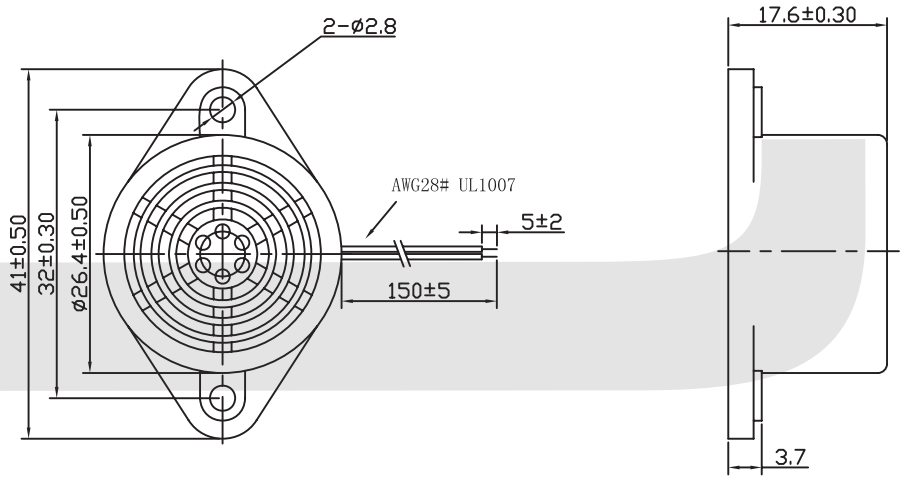

Order Code	Rated Voltage	Min.S.P.L.(@20cm)
KLS3-MB-2618-A	1.5VDC	85dB
KLS3-MB-2618-B	3VDC	80dB
KLS3-MB-2618-C	6VDC	80dB
KLS3-MB-2618-D	9VDC	80dB
KLS3-MB-2618-E	12VDC	85dB
KLS3-MB-2618-F	24VDC	85dB

ORDER INFORMATION

Product NO.: KLS3-MB-2618 A

Part Number
Mechanical Buzzer Series
Rated Voltage
Dimensions

Mechanical Buzzer Series

KLS3-MB-2618S 26*19. 7mm Mechanical Buzzer Series

SPECIFICATIONS

Rated Voltage	24VDC
Operating Voltage	4-28VDC
Max.Rated Current	50mA
Min.S.P.L. (@ 20cm)	95dB
Resonant Frequency	400 ± 100Hz
Operating Temp	-20 ~ +60 ° C
Weight	17g



Dimensions (Unit:mm)

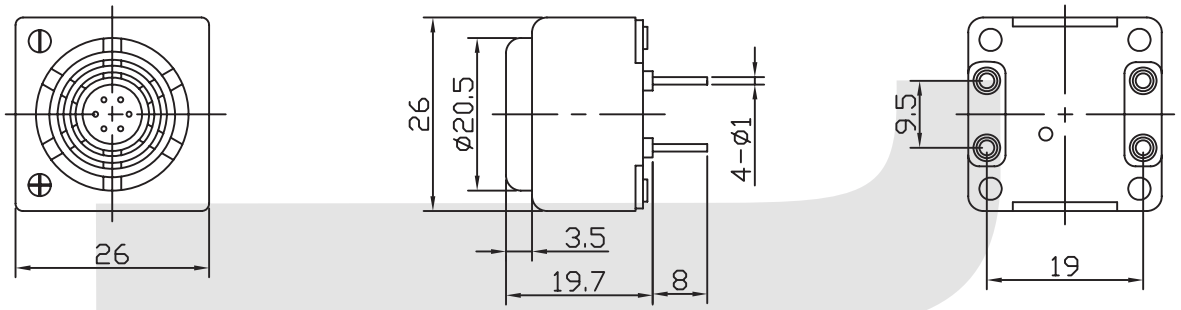

Order Code	Rated Voltage	Min.S.P.L.(@20cm)	Operating Voltage
KLS3-MB-2618S-A	6VDC	95dB	4-8
KLS3-MB-2618S-B	12VDC	95dB	7-16
KLS3-MB-2618S-C	24VDC	95dB	20-28

ORDER INFORMATION

Product NO.: KLS3-MB-2618S A

Part Number
Mechanical Buzzer Series
Rated Voltage
Dimensions

Mechanical Buzzer Series

KLS3-MB-2619 26*19. 5mm Mechanical Buzzer Series

SPECIFICATIONS

Rated Voltage	24VDC
Operating Voltage	4-28VDC
Max.Rated Current	55mA
Min.S.P.L. (@ 20cm)	95dB
Resonant Frequency	400 ± 100Hz
Operating Temp	-20 ~ +60 ° C
Weight	17g





Dimensions (Unit:mm)

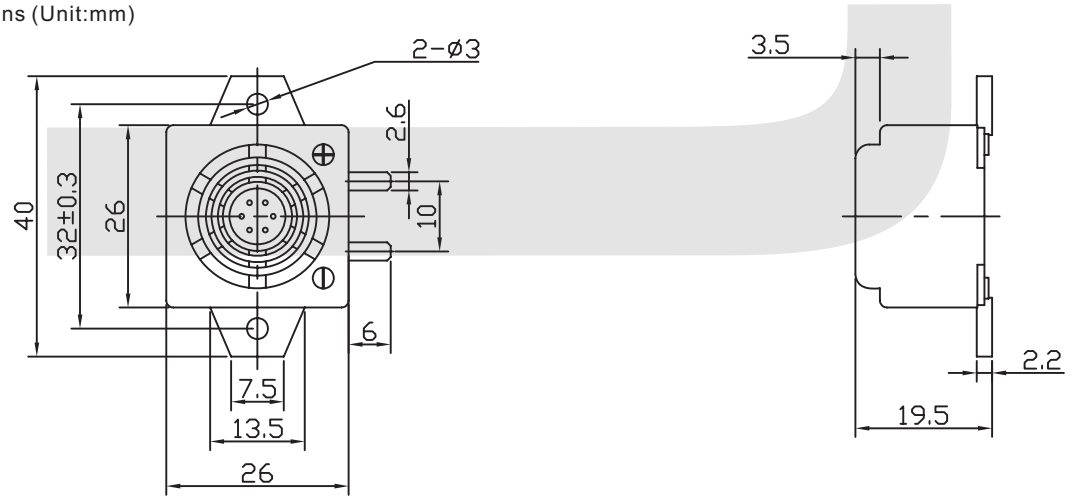

Order Code	Rated Voltage	Min.S.P.L.(@20cm)	Operating Voltage
KLS3-MB-2619-A	6VDC	90dB	4-8
KLS3-MB-2619-B	12VDC	95dB	7-16
KLS3-MB-2619-C	24VDC	95dB	20-28

ORDER INFORMATION

Product NO.: KLS3-MB-2619 A

Part Number
Mechanical Buzzer Series
Rated Voltage
Dimensions

Mechanical Buzzer Series

KLS3-MB-3011 30*11mm Mechanical Buzzer Series

SPECIFICATIONS

Rated Norse Power	0.15W
Rated Long Max Power	0.3W
Rated Frequency Range	700-50000Hz
Rated Impedance	8Ω
Min.S.P.L. (@ 10cm)	83dB at 1.2KHz 1.1 Vrms Sine Wave
Resonant Frequency	1.2±0.2KHz
Operating Temp	-20 ~ +60 ° C
Weight	12g



Dimensions (Unit:mm)



ORDER INFORMATION

Product NO.: KLS3-MB-3011

Part Number
Mechanical Buzzer Series
Dimensions

KLS

7-Optoelectronics -ОПТОЭЛЕКТРОННЫЕ ПРИБОРЫ

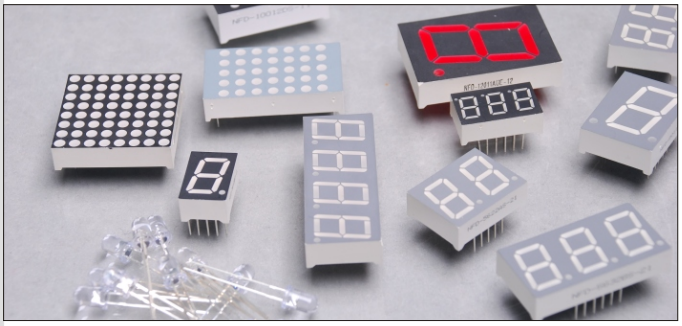

7-1 LED Character and Numeric
7-2 Dot Matrix
7-3 LED light bar
7-4 LED lamp
7-5 Infrared Product
7-6 LED Cluster
7-7 Indicator Switch
7-8 LCD Displays And Modules

More . . .

LED NUMERIC DISPLAY Series

KLS9-D Single Digit Numeric Display

KLS9	-	D	-	180	1	1	A	EG	-	1	1	-	XXX
1		2		3	4	5	6	7		8	9		10

1. Brank: KLS ELECTRONIC
2. Digit Mode: D-Display
3. Digit Character Height: 180-1.80" May be two symbols (If first X is 0 , neglected)
4. Digit Number: 1- Single digit 2-Dual digit 3-Three digit 4-Four digit
5. Model Number:
6. Drive Mode: A. C. E. ..... - Common Cathode B. D. F. ..... - Common Anode Z-Universal
7. Color Code:

H: Red	GaP/GaP	700nm	UG: High Bright Green	AlGaInP	574nm
S: High Bright Red	GaAlAs/GaAs SH	660nm	PG: Super Pure Green	AlGaInP	525nm
D: Super Bright Red	GaAlAs/GaAs DH	660nm	BG: Super Bluish Green	AlGaInP	505nm
UR: Ultra Bright Red	GaAlAs/GaAlAs DDH	660nm	B: Blue GaN/SiC		430nm
UHR: Ultra Bright Red	AlGaInP	640nm	UB: Super Bright Blue	InGaN/SiC	470nm
E: Orange	GaAsP/GaP	635nm	V: UV	InGaN/SiC	405nm
UE: High Bright Orange	AlGaInP	630nm	W: White		
Y: Yellow	GaAsP/GaP	585nm	EG: Orange+Green Bi-Color		
UY: High Bright Yellow	AlGaInP	590nm	SG: High Red+Green Bi-Color		
G: Green	GaP/GaP	568nm	RGB: Multicolor		

8. Reflector Surface Color: 0-White Surface 1-Black Surface 2-Gray Surface 3-Red Surface
9. Segment Epoxy Color: 0-Water Clear 1-White Diffused 2-Red Diffused
   3-Green Diffused 4-Yellow Diffused
10. Special Device: -Lxx: Pin Length -B: Both Side Decimal Point -N: No Decimal Point

LED NUMERIC DISPLAY Series

KLS9-D Single Digit Numeric Display

IX

PACKAGE DIMENSION

KLS9D-2811 Series

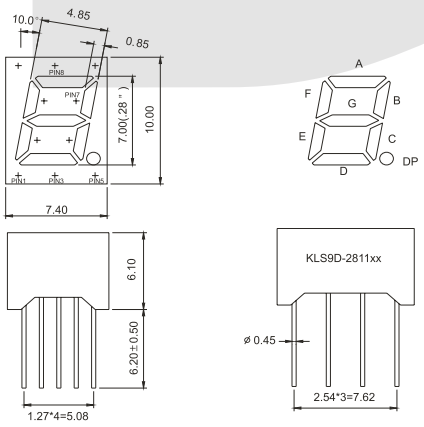

KLS9D-3011 Series

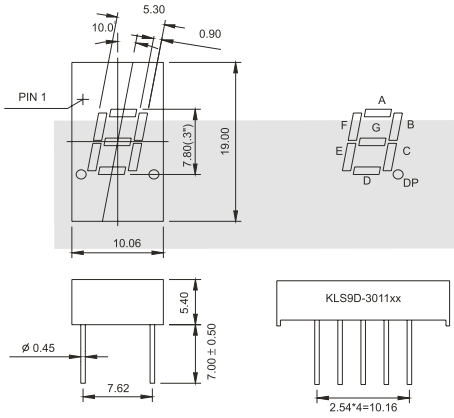

KLS9D-3011 Series

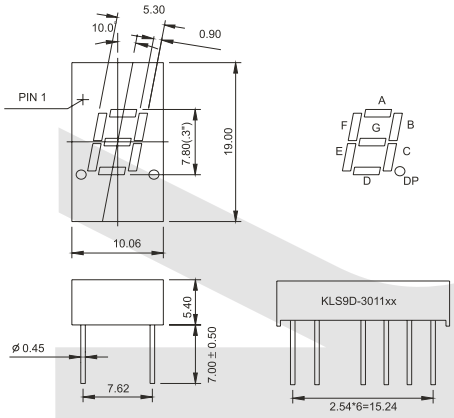

INTERNAL CIRCUIT DIAGRAM

KLS9D-2811 Ax

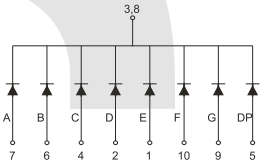

KSL9D-2811 Bx

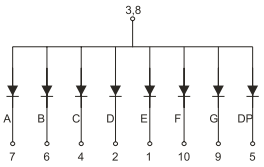

KLS9D-3011 Ax

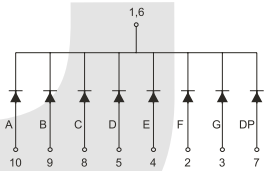

KLS9D-3011 Bx

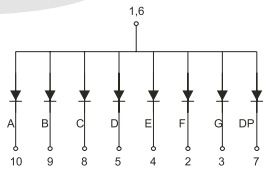

KLS9D-3011 Cx

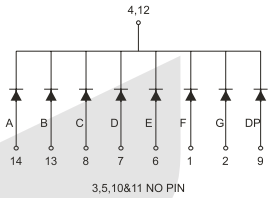

KLS9D-3011 Dx

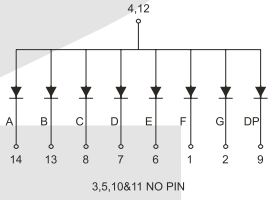

LED NUMERIC DISPLAY Series

KLS9-D Single Digit Numeric Display

PACKAGE DIMENSION

KLS9D-3611 Series

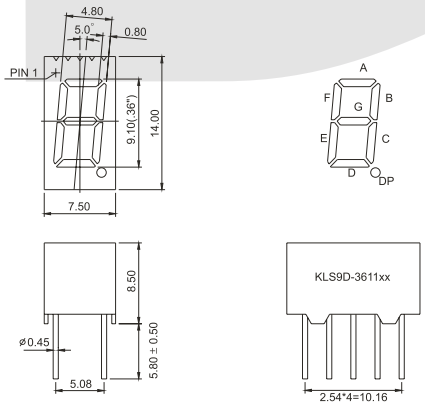

KLS9D-3911 Series

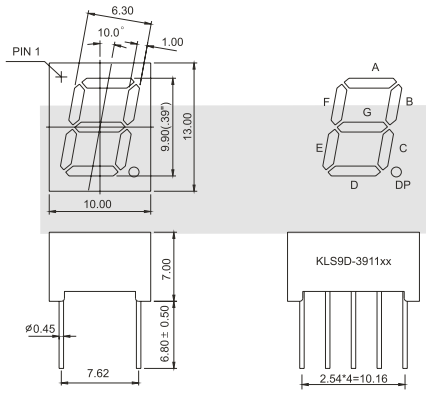

KLS9D-3912 Series

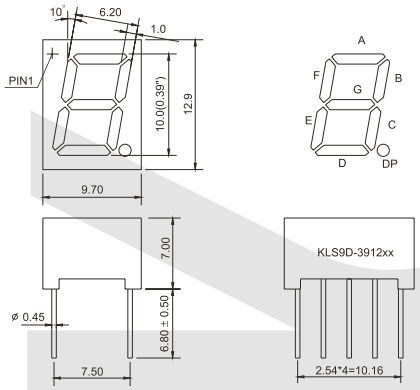

INTERNAL CIRCUIT DIAGRAM

KLS9D-3611Ax

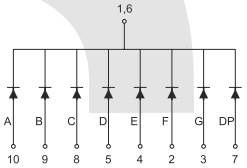

KLS9D-3611Bx

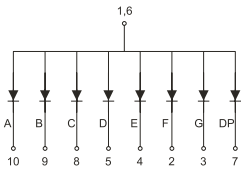

KLS9D-3911Ax

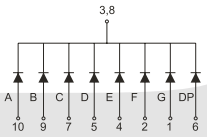

KLS9D-3911Bx

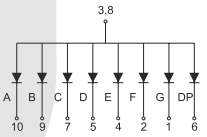

KLS9D-3911Cx

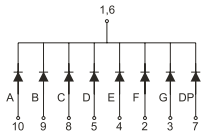

KLS9D-3911Dx

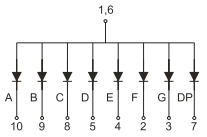

KLS9D-3912Ax

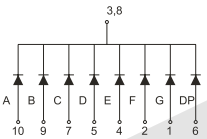

KLS9D-3912Bx

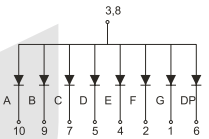

KLS9D-3912Cx

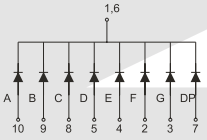

KLS9D-3912Dx

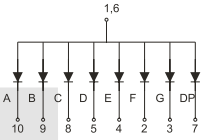

LED NUMERIC DISPLAY Series

KLS9-D Single Digit Numeric Display

IX

PACKAGE DIMENSION

KLS9D-4011 Series

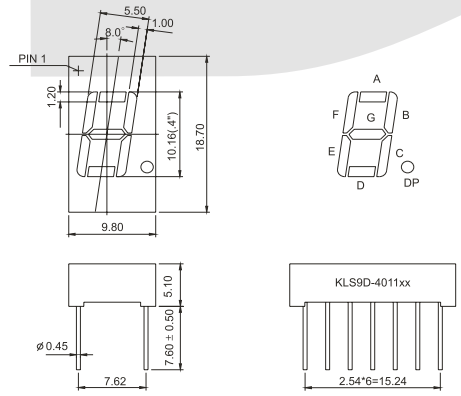

INTERNAL CIRCUIT DIAGRAM

KLS9D-4011Ax

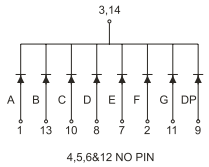

KLS9D-4011Bx

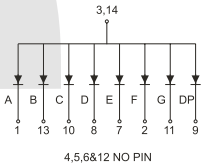

KLS9D-4011Ex

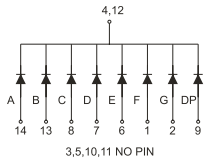

KLS9D-4011Fx

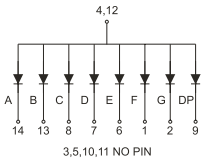

KLS9D-4011 Series

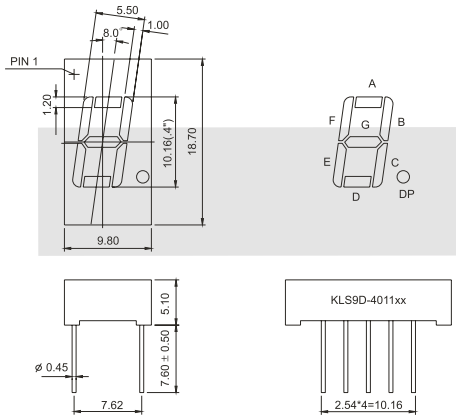

KLS9D-4011Cx

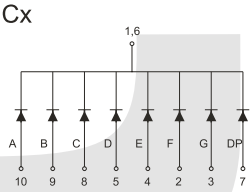

KLS9D-4011Dx

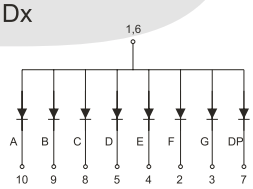

KLS9D-5011 Series

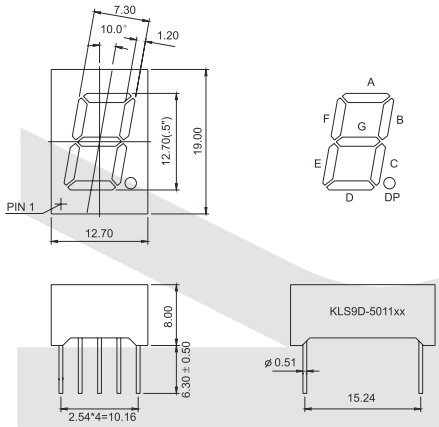

KLS9D-5011Ax

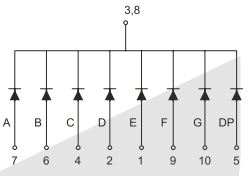

KLS9D-5011Bx

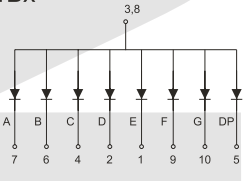

LED NUMERIC DISPLAY Series

KLS9-D Single Digit Numeric Display

IX

PACKAGE DIMENSION	INTERNAL CIRCUIT DIAGRAM
KLS9D-5013 Series 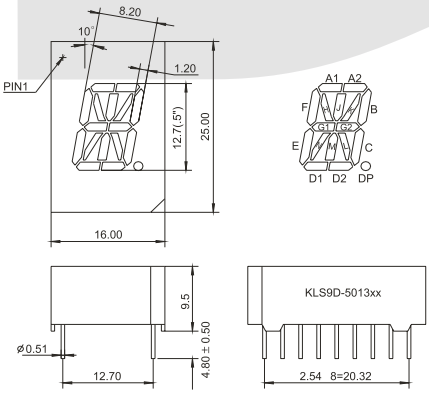	KLS9D-5013Ax 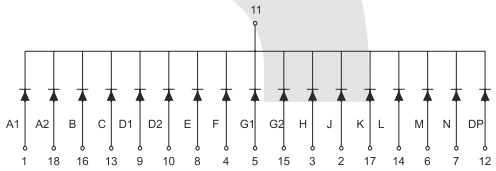 KLS9D-5013Bx 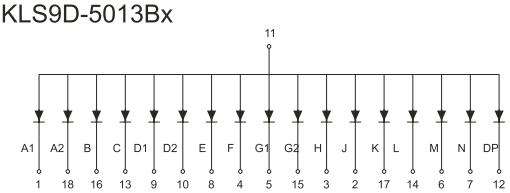
KSL9D-5013 Series 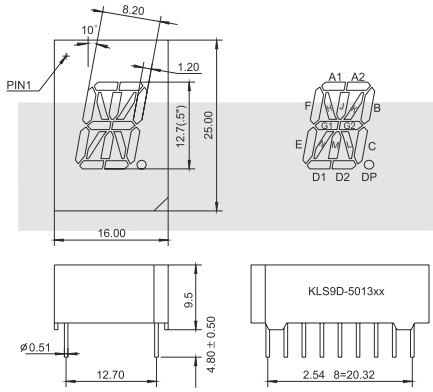	KLS9D-5013Cx 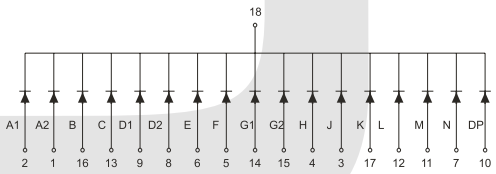 KLS9D-5013Dx 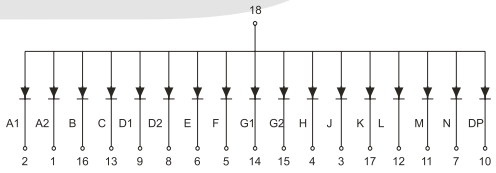
KLS9D-5211 Series 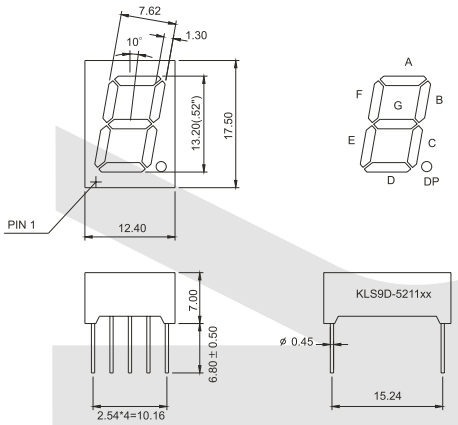	KLS9D-5211Ax 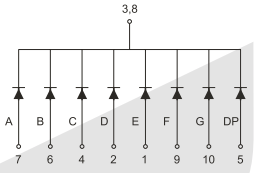 KLS9D-5211Bx 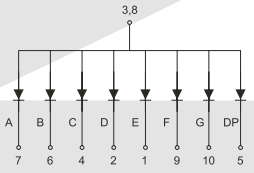

LED NUMERIC DISPLAY Series

KLS9-D Single Digit Numeric Display

PACKAGE DIMENSION	INTERNAL CIRCUIT DIAGRAM
KLS9D-5611 Series 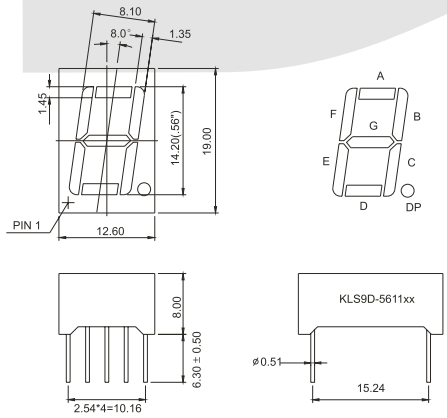	KLS9D-5611Ax 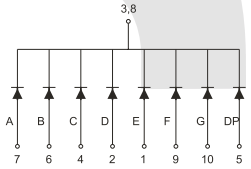 KLS9D-5611Bx 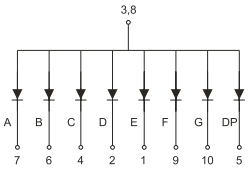
KLS9D-5612 Series 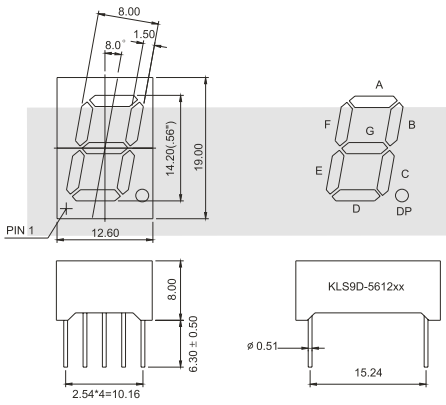	KLS9D-5612Ax 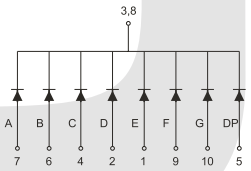 KLS9D-5612Bx 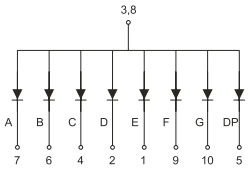
KLS9D-5613 Series 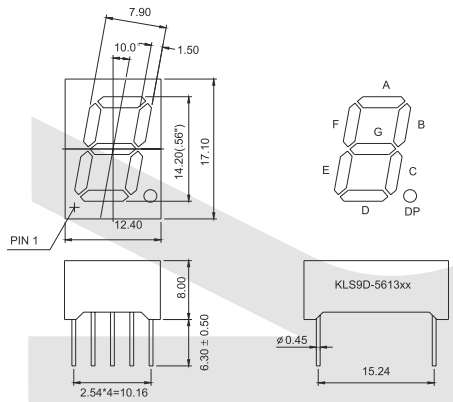	KLS9D-5613Ax 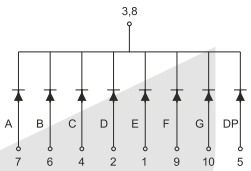 KLS9D-5613Bx 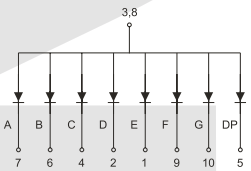

LED NUMERIC DISPLAY Series

KLS9-D Single Digit Numeric Display

IX

PACKAGE DIMENSION

KLS9D-6011 Series

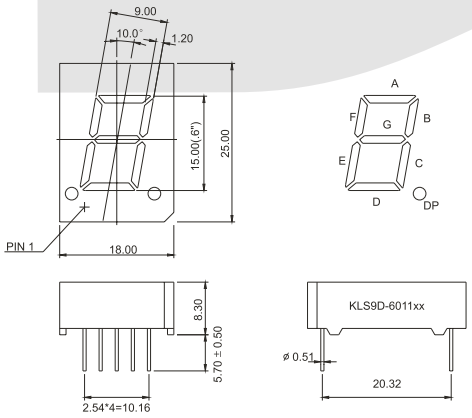

KLS9D-8011 Series

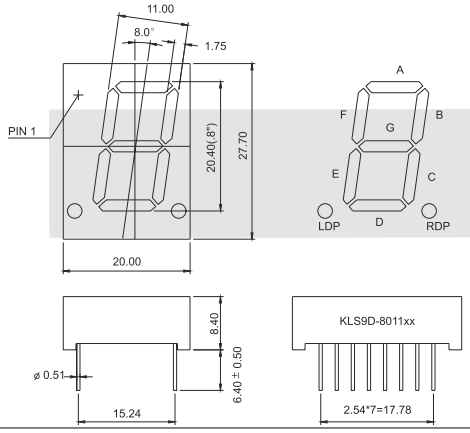

KLS9D-8011 Series

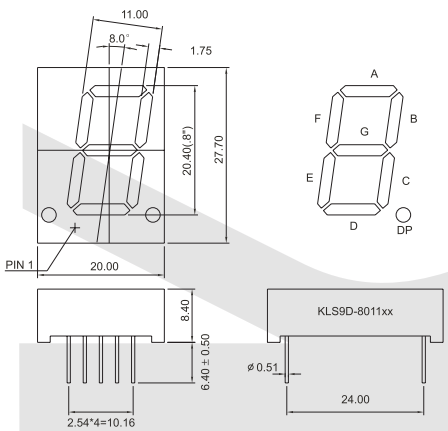

INTERNAL CIRCUIT DIAGRAM

KLS9D-6011Ax

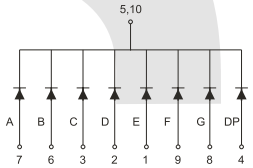

KLS9D-6011Bx

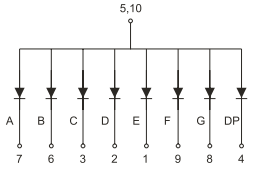

KLS9D-8011Ax

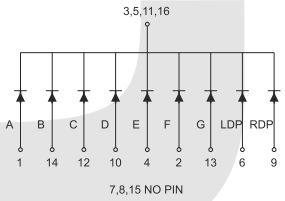

KLS9D-8011Bx

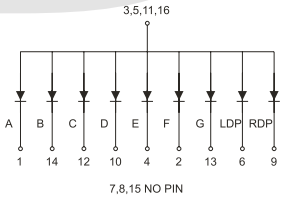

KLS9D-8011Cx

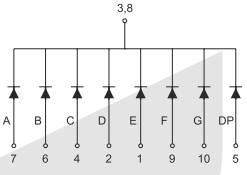

KLS9D-8011Dx

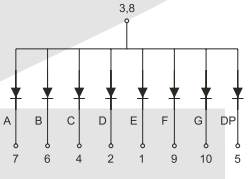

LED NUMERIC DISPLAY Series

KLS9-D Single Digit Numeric Display

PACKAGE DIMENSION

KLS9D-8012 Series

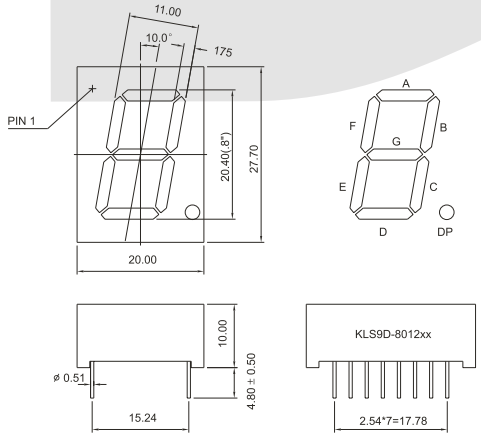

KLS9D-8012 Series

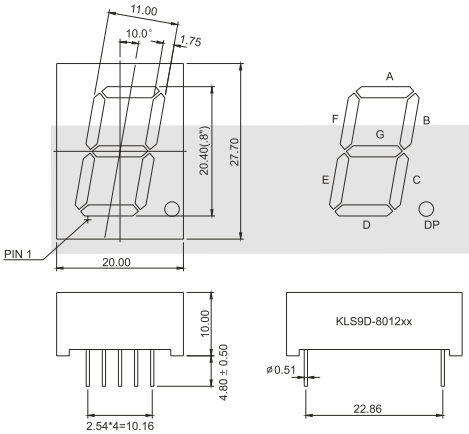

KLS9D-8013 Series

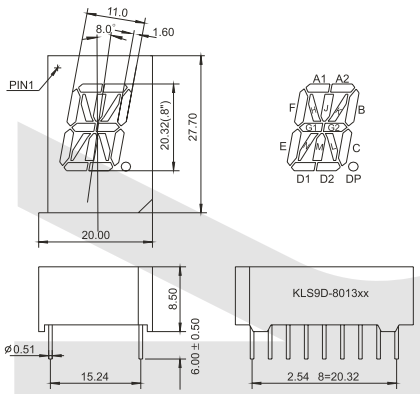

INTERNAL CIRCUIT DIAGRAM

KLS9D-8012Ax

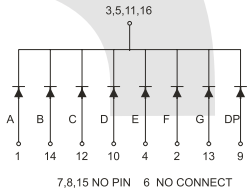

KLS9D-8012Bx

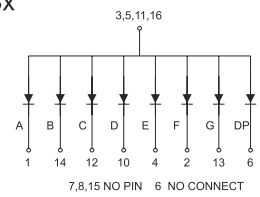

KLS9D-8012Cx

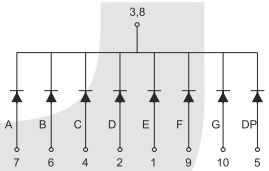

KLS9D-8012Dx

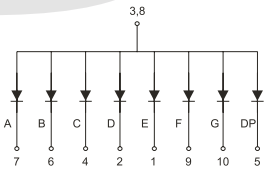

KLS9D-8013Ax

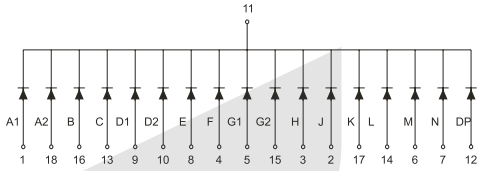

KLS9D-8013Bx

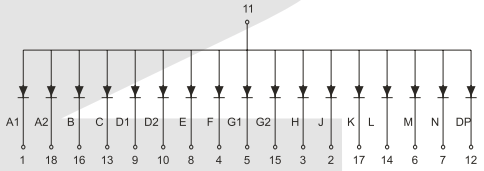

LED NUMERIC DISPLAY Series

KLS9-D Single Digit Numeric Display

IX

PACKAGE DIMENSION

KLS9D-8014 Series

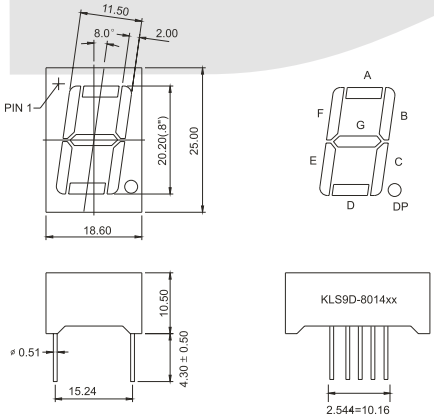

KLS9D-10011 Series

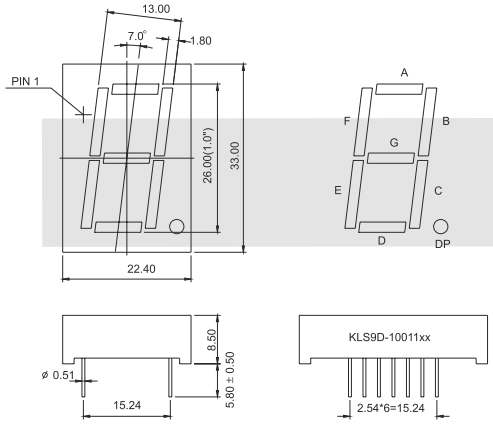

KLS9D-10012 Series

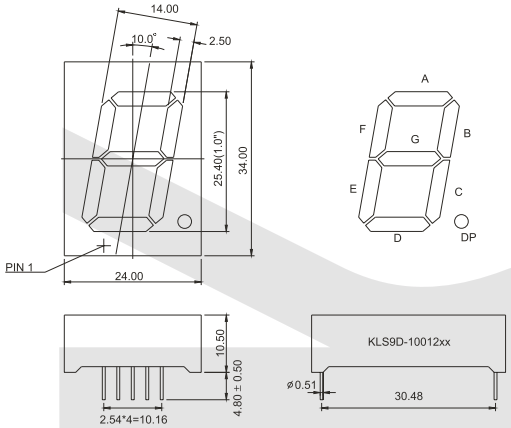

INTERNAL CIRCUIT DIAGRAM

KLS9D-8014Ax

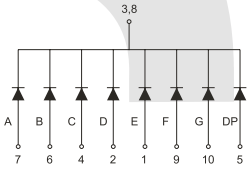

KLS9D-8014Bx

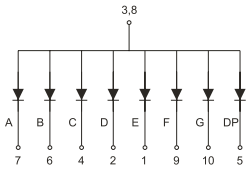

KLS9D-10011Ax

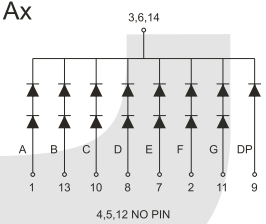

KLS9D-10011Bx

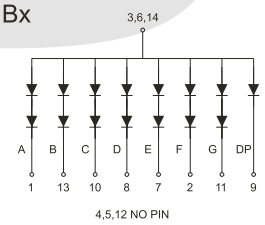

KLS9D-10012Ax

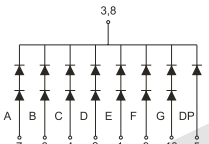

NFD-10012Bx

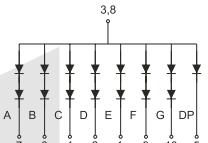

KLS9D-10012Cx

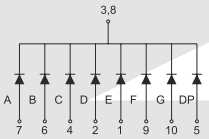

NFD-10012Dx

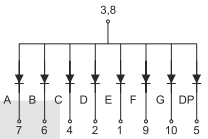

LED NUMERIC DISPLAY Series

KLS9-D Single Digit Numeric Display

PACKAGE DIMENSION

KLS9D-10012 Series

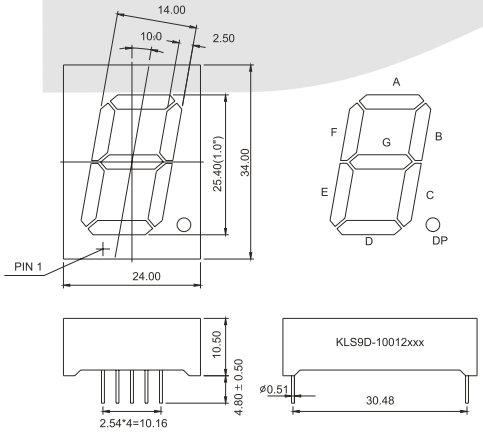

KLS9D-10013 Series

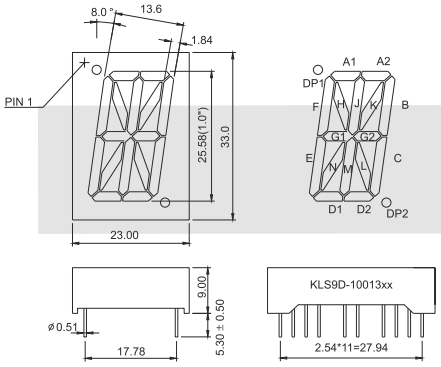

KLS9D-12011 Series

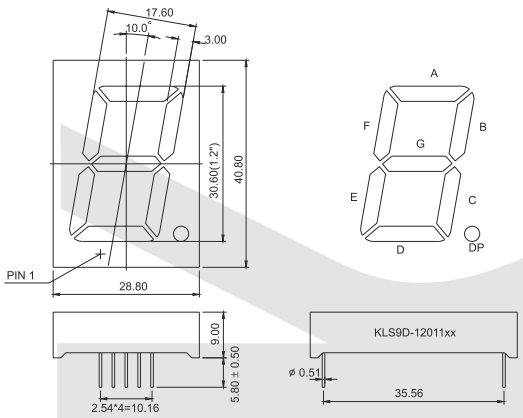

INTERNAL CIRCUIT DIAGRAM

KLS9D-10012AEG

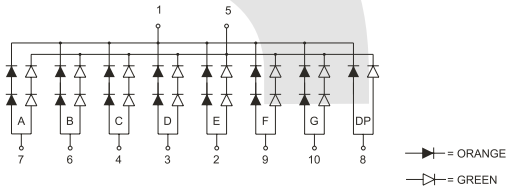

KLS9D-10012BEG

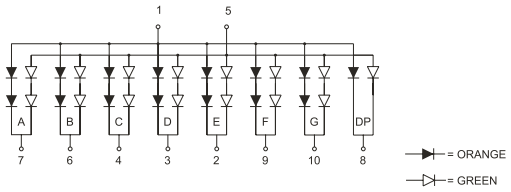

KLS9D-10013Ax

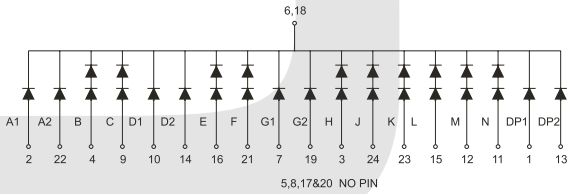

KLS9D-10013Bx

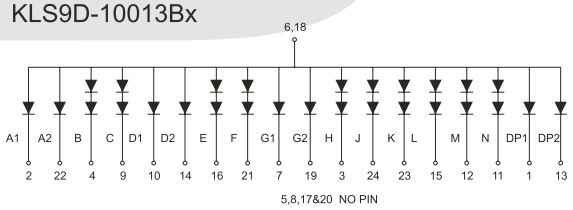

KLS9D-12011Ax

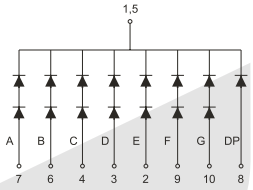

KLS9D-12011Bx

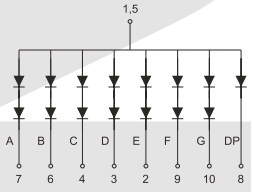

LED NUMERIC DISPLAY Series

KLS9-D Single Digit Numeric Display

IX

PACKAGE DIMENSION

KLS9D-12011 Series

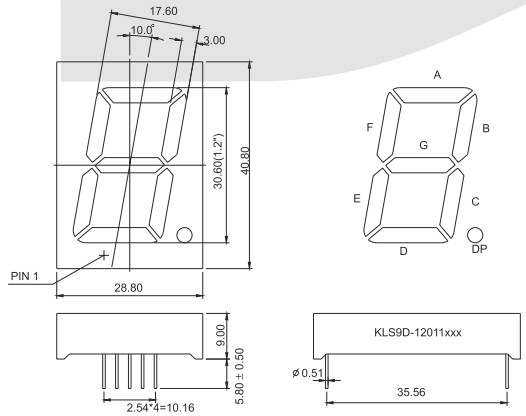

KLS9D-12012 Series

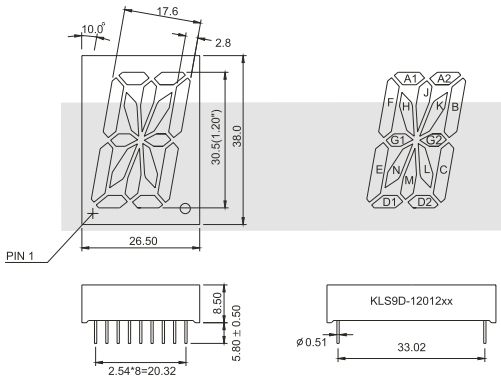

KLS9D-15011 Series

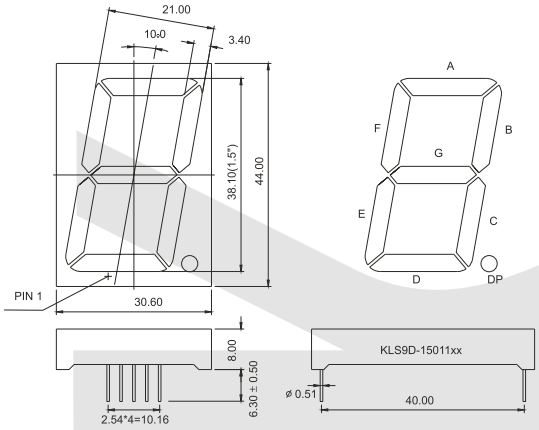

INTERNAL CIRCUIT DIAGRAM

KLS9D-12011AEG

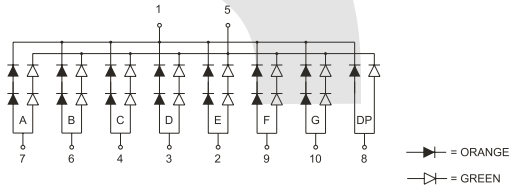

KLS9D-12011BEG

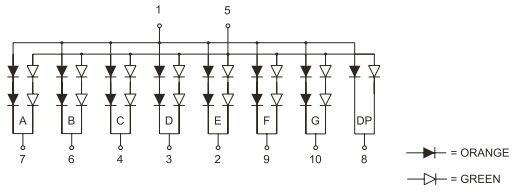

KLS9D-12012Ax

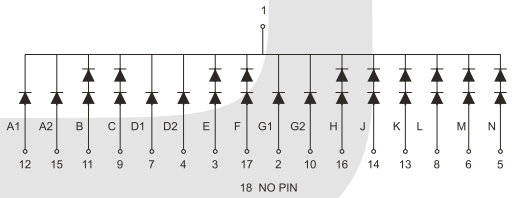

KLS9D-12012Bx

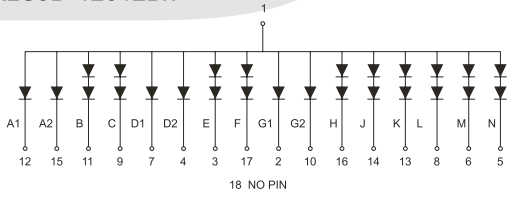

KLS9D-15011Ax

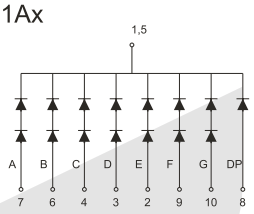

KLS9D-15011Bx

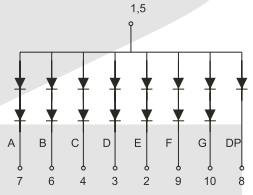

LED NUMERIC DISPLAY Series

KLS9-D Single Digit Numeric Display

PACKAGE DIMENSION

KLS9D-15011 Series

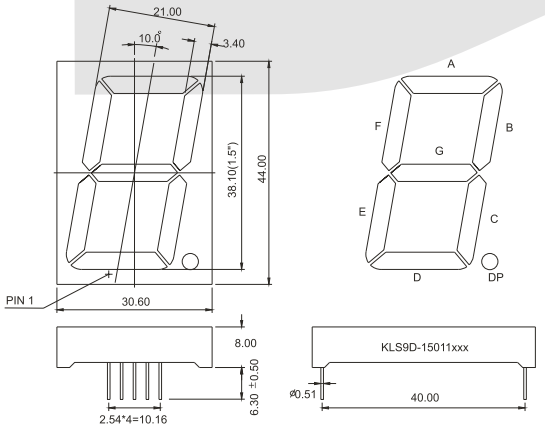

KLS9D-15012 Series

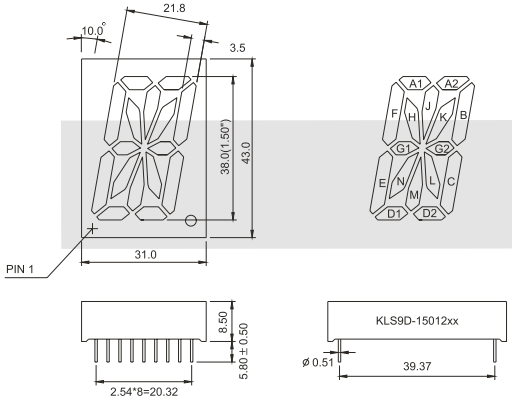

KLS9D-18011 series

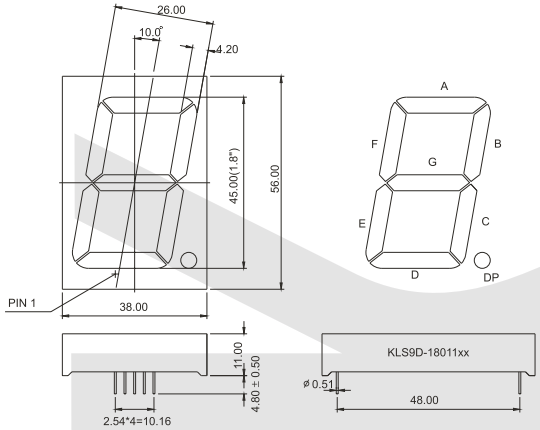

INTERNAL CIRCUIT DIAGRAM

KLS9D-15011AEG

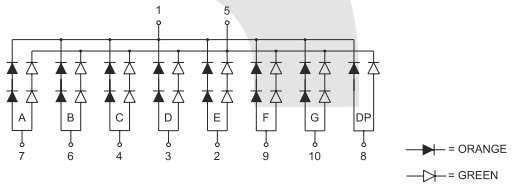

KLS9D-15011BEG

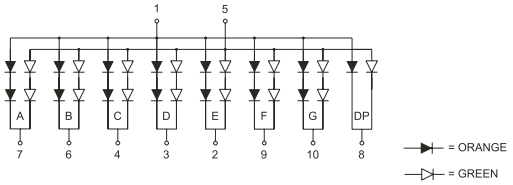

KLS9D-15012Ax

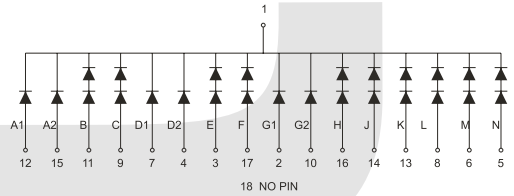

KLS9D-15012Bx

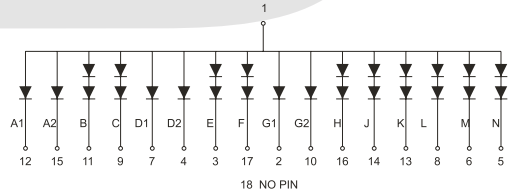

KLS9D-18011Ax

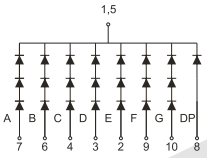

KLS9D-18011Bx

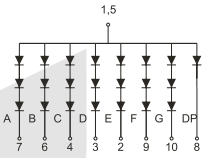

KLS9D-18011Cx

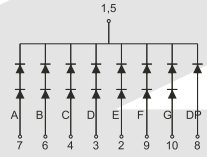

KLS9D-18011Dx

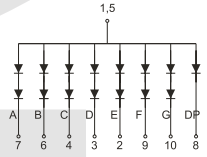

LED NUMERIC DISPLAY Series

KLS9-D Single Digit Numeric Display

IX

PACKAGE DIMENSION

KLS9D-18011 series

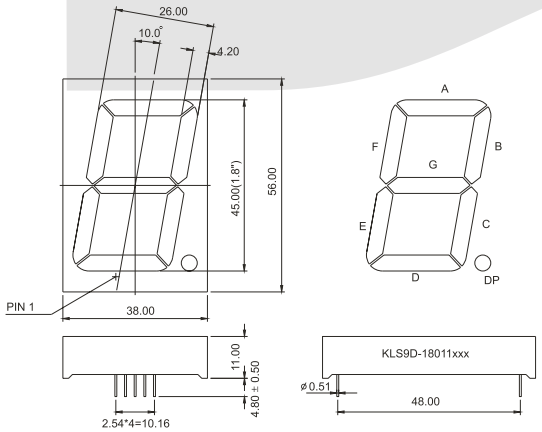

KLS9D-18011 series

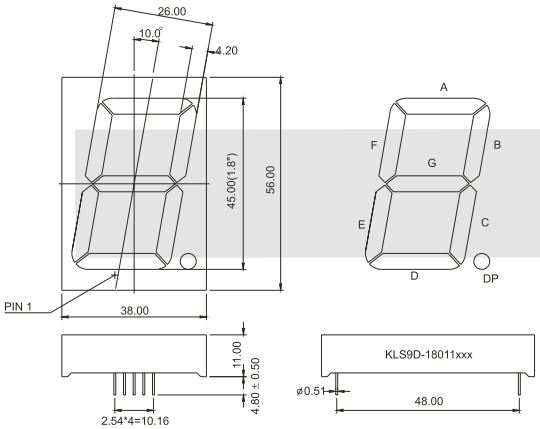

KLS9D-23011 Series

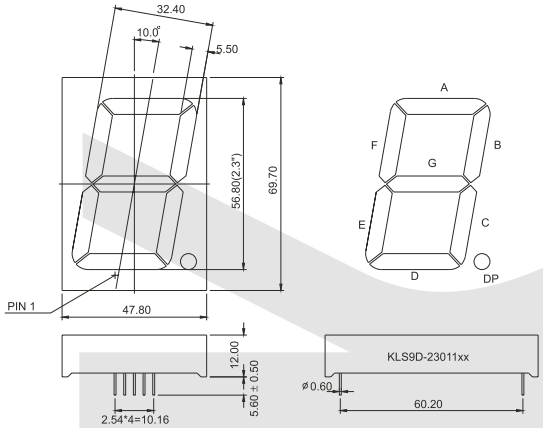

INTERNAL CIRCUIT DIAGRAM

KLS9D-18011AEG

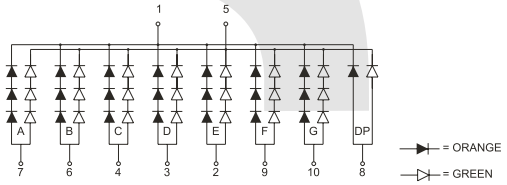

KLS9D-18011BEG

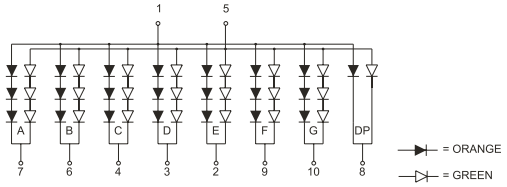

KLS9D-18011CEG

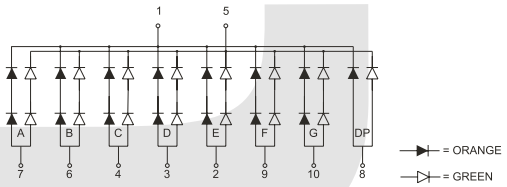

KLS9D-18011DEG

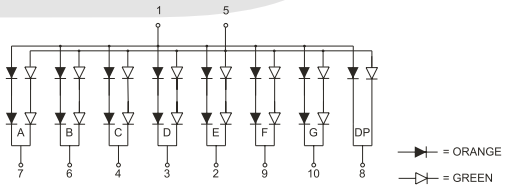

KLS9D-23011Ax

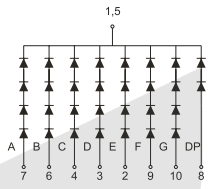

KLS9D-23011Bx

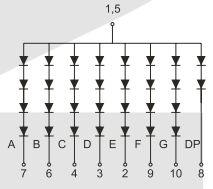

LED NUMERIC DISPLAY Series

KLS9-D Single Digit Numeric Display

PACKAGE DIMENSION	INTERNAL CIRCUIT DIAGRAM
KLS9D-23011 Series 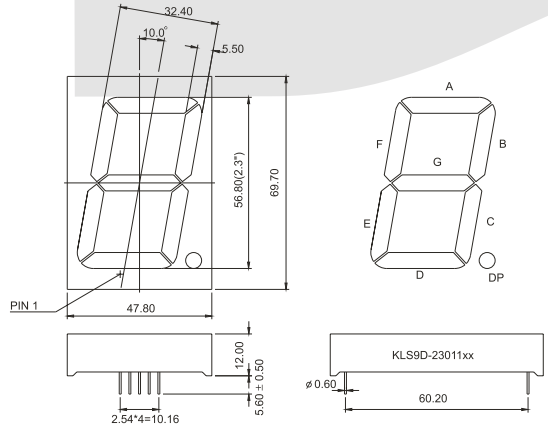	KLS9D-23011Cx 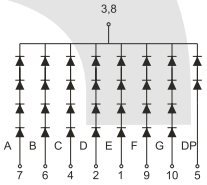 KLS9D-23011Dx 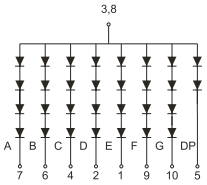
KLS9D-23011 Series 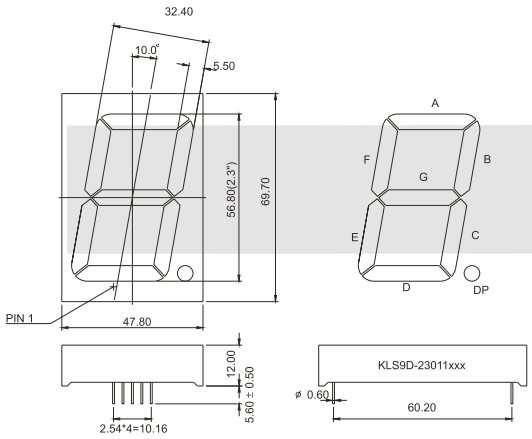	KLS9D-23011AEG 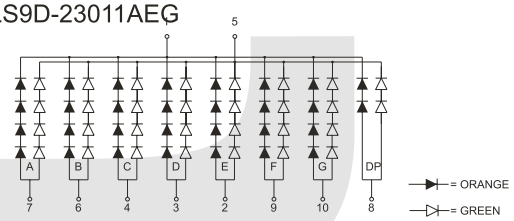 KLS9D-23011BEG 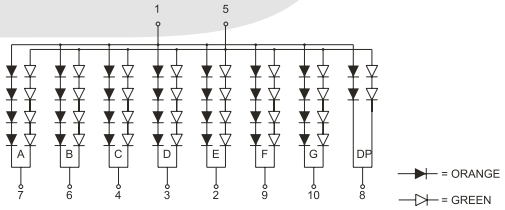
KLS9D-30011 Series 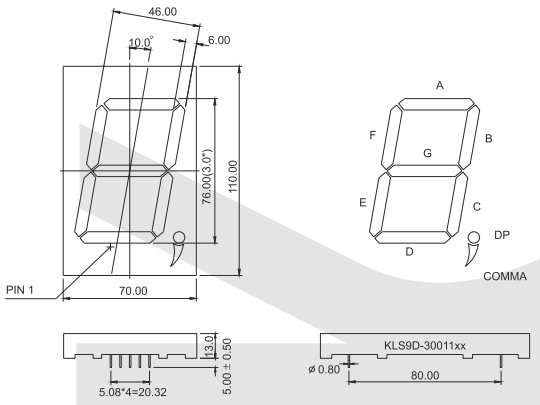	KLS9D-30011Ax 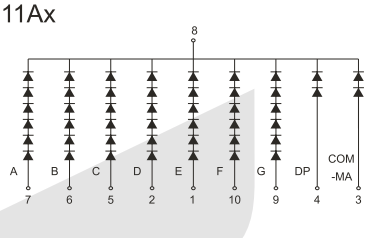 KLS9D-30011Bx 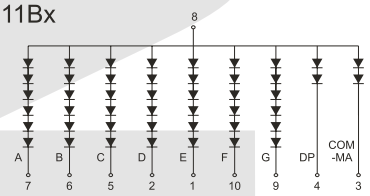

LED NUMERIC DISPLAY Series

KLS9-D Single Digit Numeric Display

PACKAGE DIMENSION	INTERNAL CIRCUIT DIAGRAM
KLS9D-30011 Series 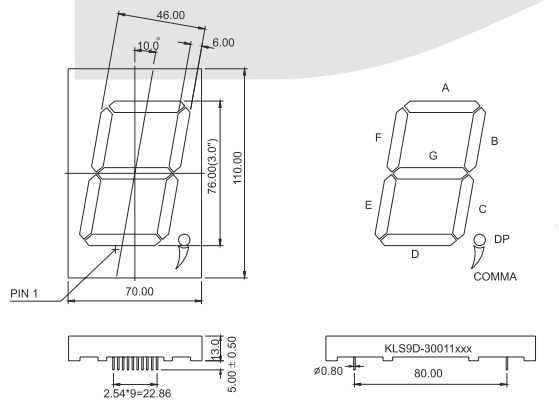	KLS9D-30011AEG 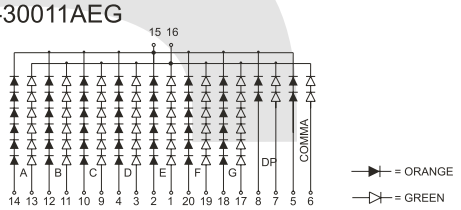 KLS9D-30011BEG 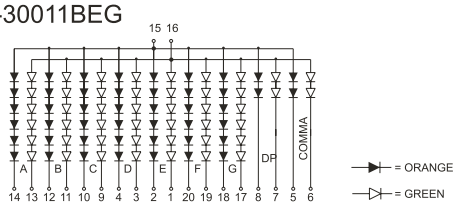
KLS9D-40011 Series 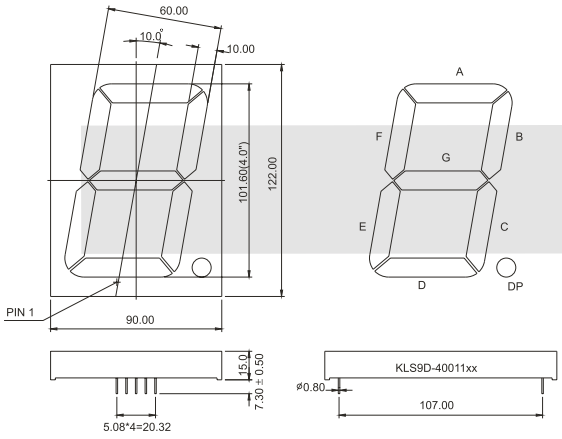	KLS9D-40011Ax 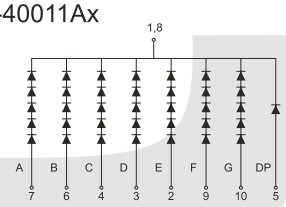 KLS9D-40011Bx 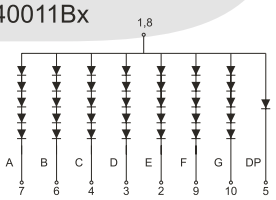
KLS9D-40011 Series 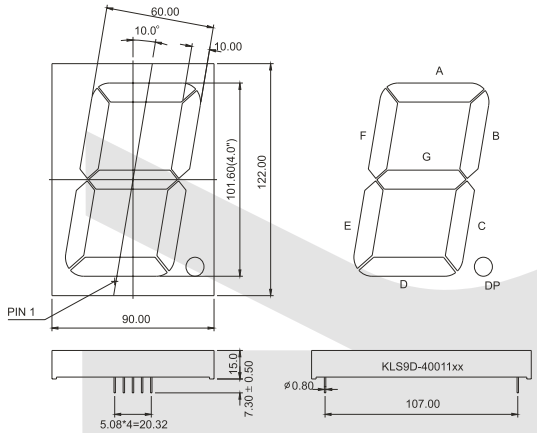	KLS9D-40011Cx 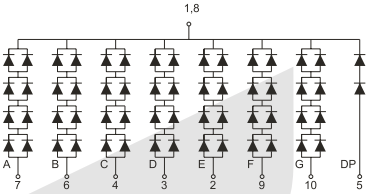 KLS9D-40011Dx 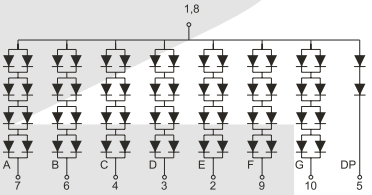

LED NUMERIC DISPLAY Series

KLS9-D Single Digit Numeric Display

PACKAGE DIMENSION	INTERNAL CIRCUIT DIAGRAM
KLS9D-40011 Series 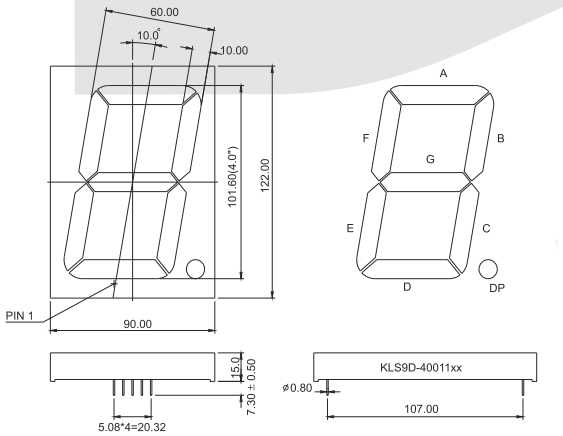	KLS9D-40011Ex 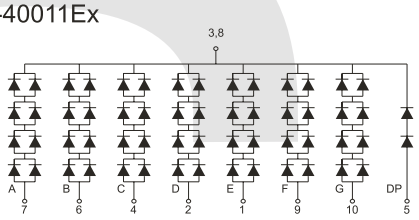 KLS9D-40011Fx 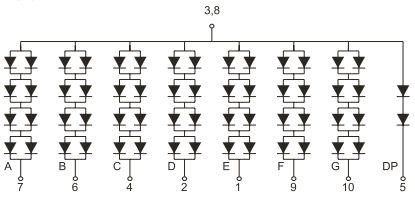
KLS9D-40011 Series 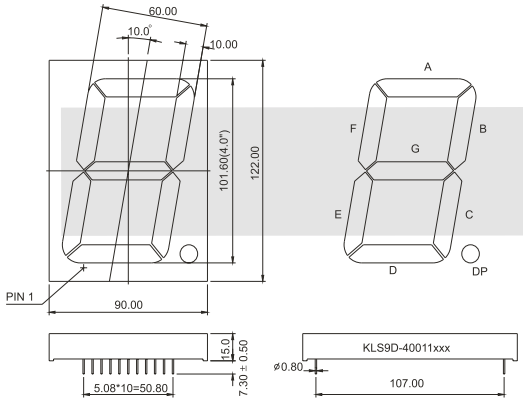	KLS9D-40011AEG 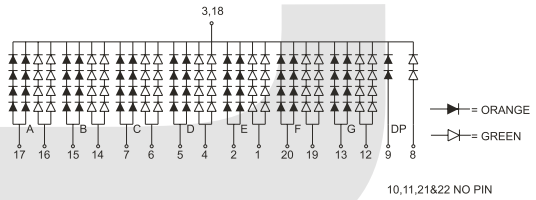 KLS9D-40011BEG 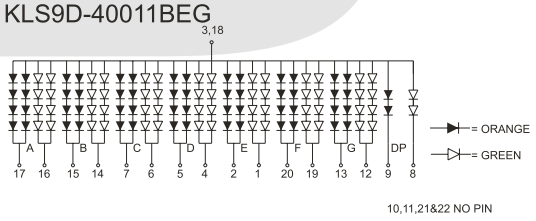
KLS9D-50011 Series 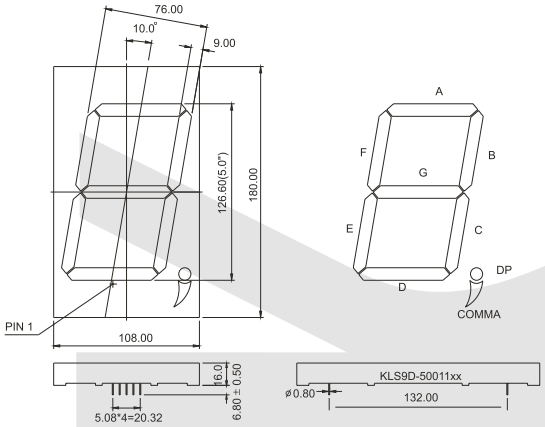	KLS9D-50011Ax 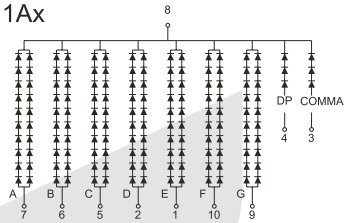 KSL9D-50011Bx 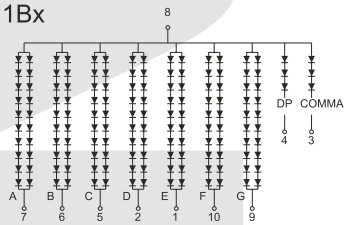

LED NUMERIC DISPLAY Series

KLS9-D Dual Digits Numeric Display Series

KLS9	-	D	-	180	1	1	A	EG	-	1	1	-	XXX
1		2		3	4	5	6	7		8	9		10

1. Brank: KLS ELECTRONIC
2. Digit Mode: D-Display
3. Digit Character Height: 180-1.80" May be two symbols (If first X is 0 , neglected)
4. Digit Number: 1- Single digit 2-Dual digit 3-Three digit 4-Four digit
5. Model Number:
6. Drive Mode: A. C. E. ..... - Common Cathode B. D. F. ..... - Common Anode Z-Universal
7. Color Code:

H: Red	GaP/GaP		700nm	UG: High Bright Green	AlGaInP		574nm
S: High Bright Red	GaAlAs/GaAs	SH	660nm	PG: Super Pure Green	AlGaInP		525nm
D: Super Bright Red	GaAlAs/GaAs	DH	660nm	BG: Super Bluish Green	AlGaInP		505nm
UR: Ultra Bright Red	GaAlAs/GaAlAs	DDH	660nm	B: Blue GaN/SiC			430nm
UHR: Ultra Bright Red	AlGaInP		640nm	UB: Super Bright Blue	InGaN/SiC		470nm
E: Orange	GaAsP/GaP		635nm	V: UV	InGaN/SiC		405nm
UE: High Bright Orange	AlGaInP		630nm	W: White			
Y: Yellow	GaAsP/GaP		585nm	EG: Orange+Green Bi-Color			
UY: High Bright Yellow	AlGaInP		590nm	SG: High Red+Green Bi-Color			
G: Green	GaP/GaP		568nm	RGB: Multicolor			

8. Reflector Surface Color: 0-White Surface 1-Black Surface 2-Gray Surface 3-Red Surface
9. Segment Epoxy Color: 0-Water Clear 1-White Diffused 2-Red Diffused
   3-Green Diffused 4-Yellow Diffused
10. Special Device: -Lxx: Pin Length -B: Both Side Decimal Point -N: No Decimal Point

LED NUMERIC DISPLAY Series

KLS9-D Dual Digits Numeric Display Series

PACKAGE DIMENSION	INTERNAL CIRCUIT DIAGRAM
KLS9D-3021 Series 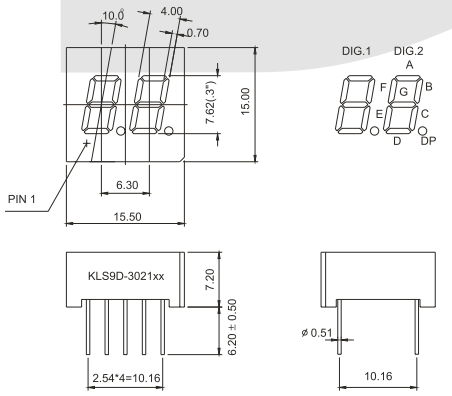	KLS9D-3021Ax 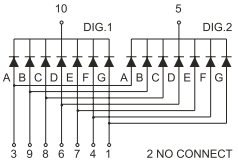 KLS9D-3021Bx 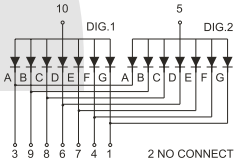 KLS9D-3021Cx 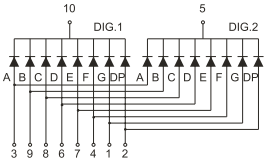 KLS9D-3021Dx 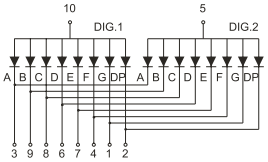
KLS9D-3621 Series 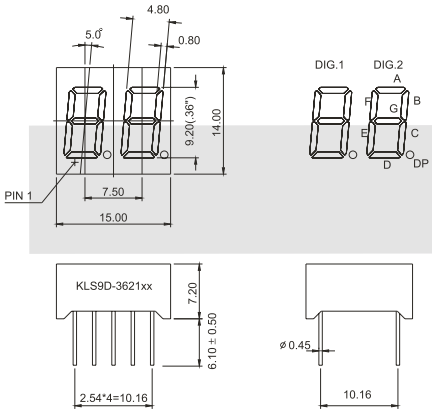	KLS9D-3621Ax 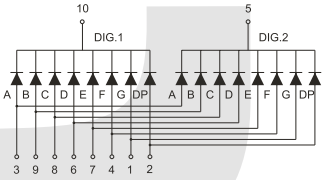 KLS9D-3621Bx 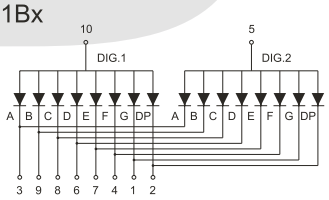
KLS9D-4021 Series 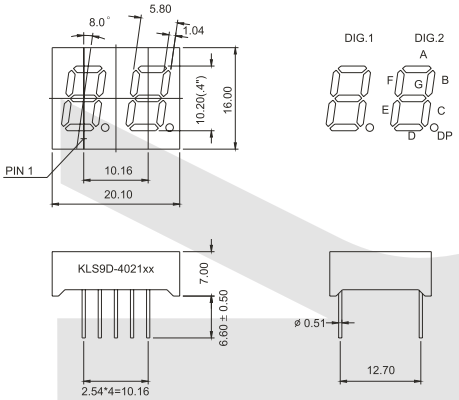	KLS9D-4021Ax 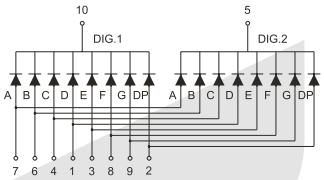 KLS9D-4021Bx 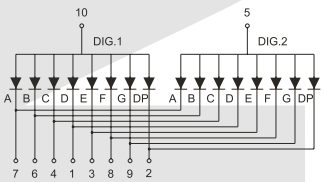

LED NUMERIC DISPLAY Series

KLS9-D Dual Digits Numeric Display Series

PACKAGE DIMENSION

KLS9D-4021 Series

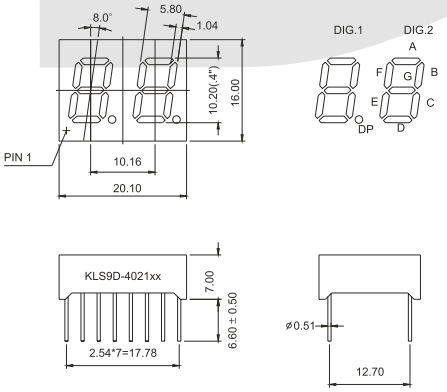

KLS9D-5021 Series

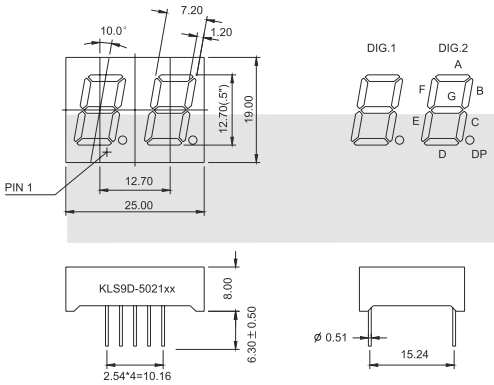

KLS9D-5021 Series

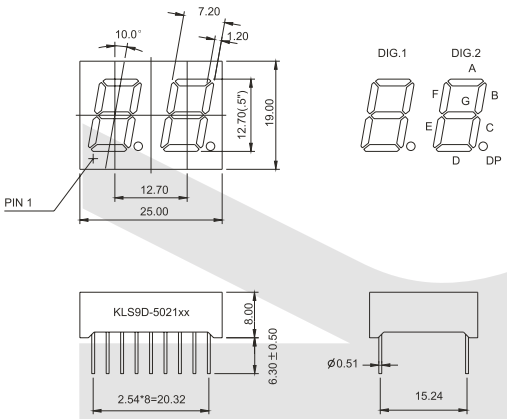

INTERNAL CIRCUIT DIAGRAM

KLS9D-4021Cx

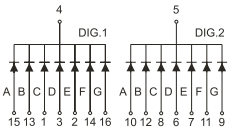

KLS9D-4021Dx

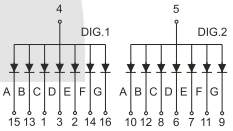

KLS9D-4021Ex

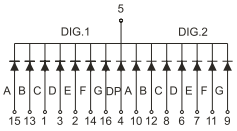

KLS9D-4021Fx

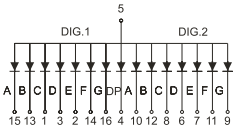

KLS9D-5021Ax

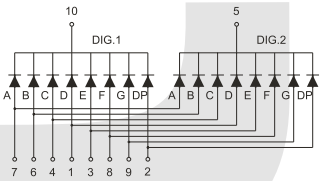

KLS9D-5021Bx

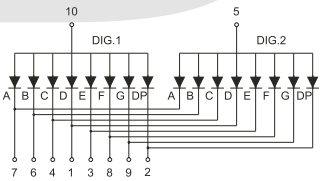

KLS9D-5021Cx

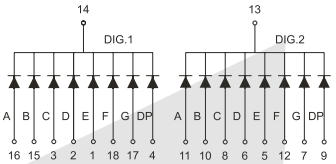

KLS9D-5021Dx

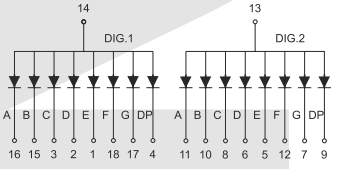

LED NUMERIC DISPLAY Series

KLS9-D Dual Digits Numeric Display Series

PACKAGE DIMENSION

KLS9D-5021 Series

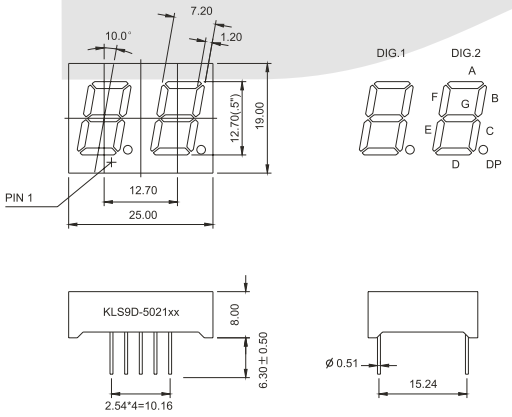

KLS9D-5221 Series

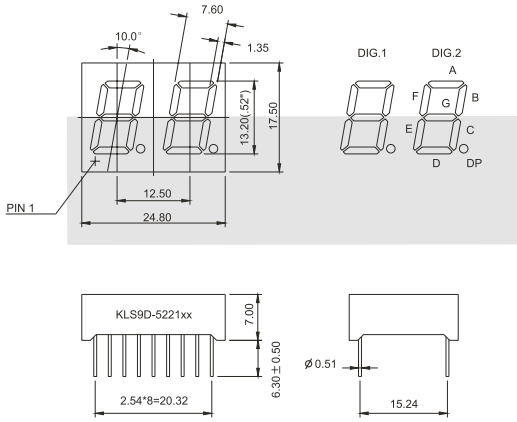

KLS9D-5421 Series

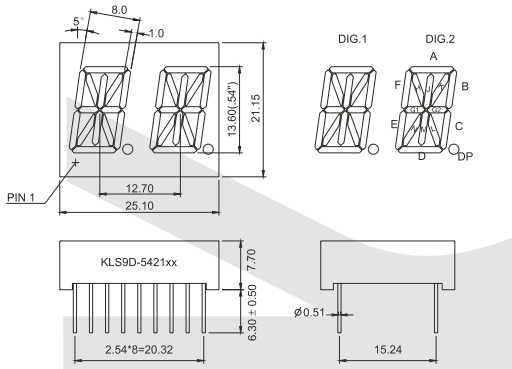

INTERNAL CIRCUIT DIAGRAM

KLS9D-5021Ex

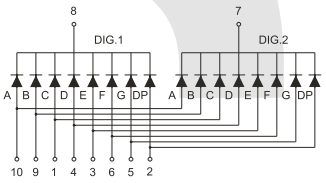

KLS9D-5021Fx

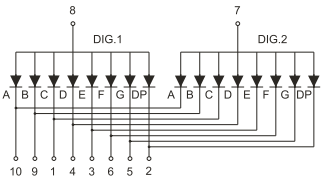

KLS9D-5221Ax

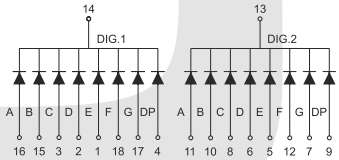

KLS9D-5221Bx

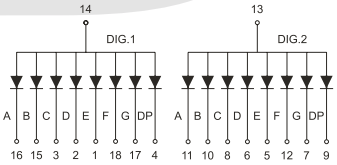

KLS9D-5421Ax

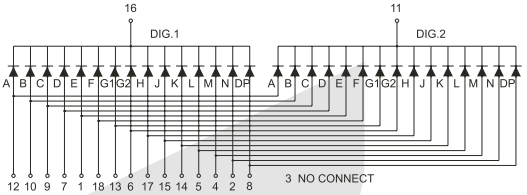

KLS9D-5421Bx

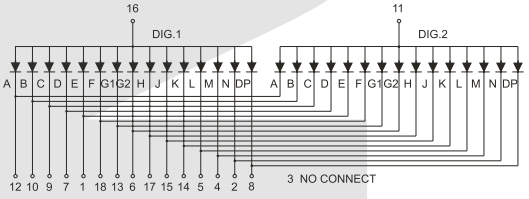

LED NUMERIC DISPLAY Series

KLS9-D Dual Digits Numeric Display Series

IX

PACKAGE DIMENSION	INTERNAL CIRCUIT DIAGRAM
KLS9D-5621 Series	KLS9D-5621Ax
KLS9D-5621 Series	KLS9D-5621Bx
KLS9D-5621 Series	KLS9D-5621Cx
KLS9D-5621 Series	KLS9D-5621Dx
KLS9D-5621 Series	KLS9D-5621Ex
KLS9D-5621 Series	KLS9D-5621Fx

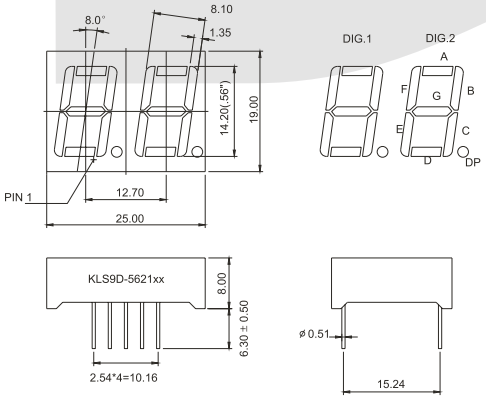

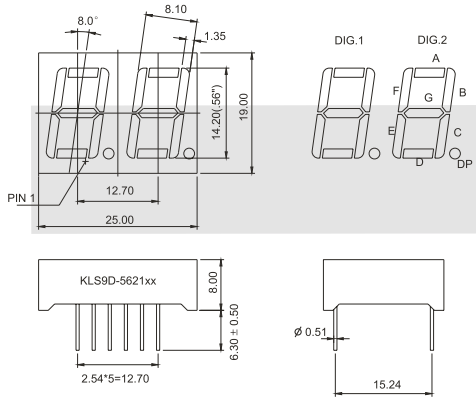

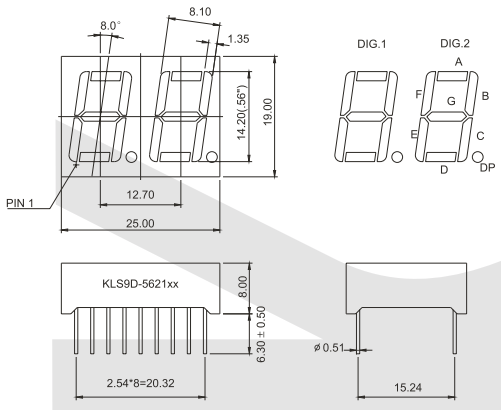

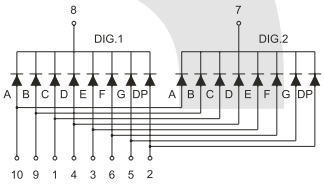

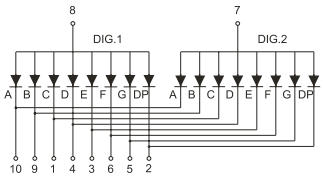

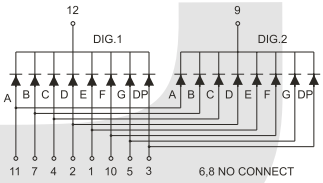

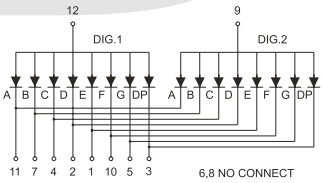

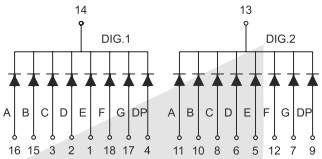

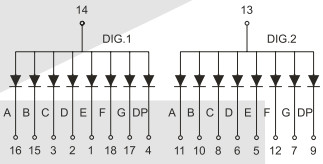

LED NUMERIC DISPLAY Series

KLS9-D Dual Digits Numeric Display Series

PACKAGE DIMENSION	INTERNAL CIRCUIT DIAGRAM
KLS9D-5622 Series 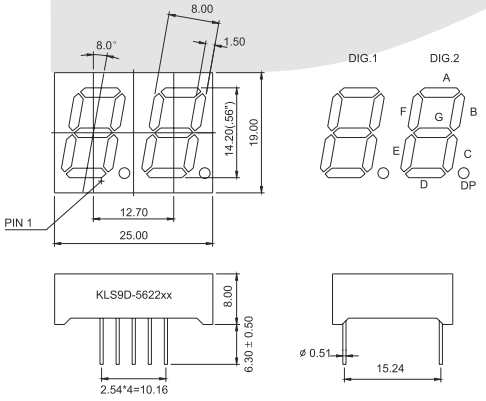	KLS9D-5622Ax 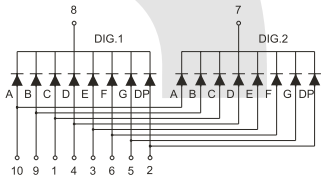 KLS9D-5622Bx 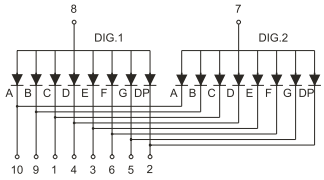
KLS9D-5622 Series 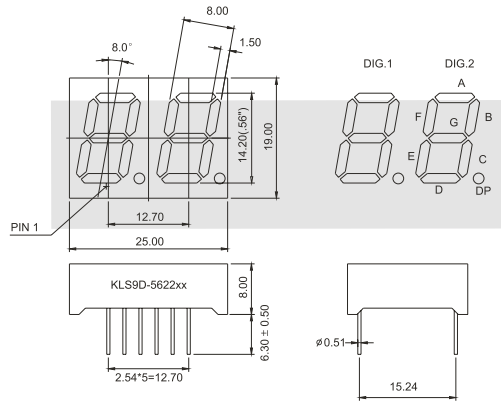	KLS9D-5622Cx 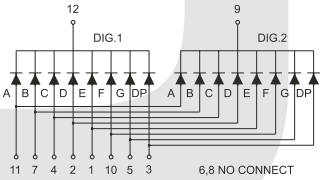 KLS9D-5622Dx 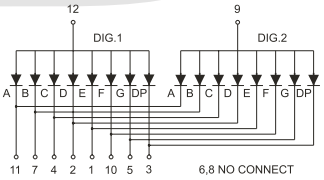
KLS9D-5622 Series 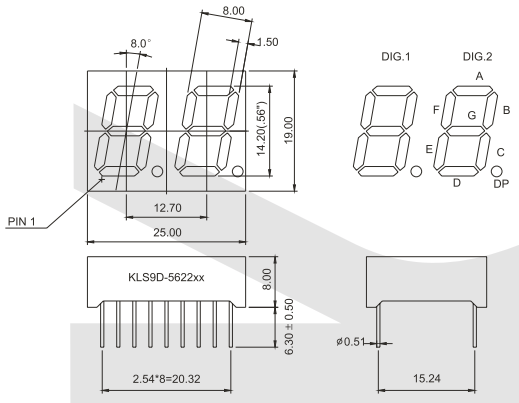	KLS9D-5622Ex 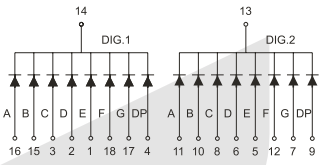 KLS9D-5622Fx 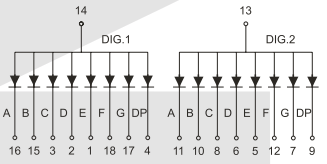

LED NUMERIC DISPLAY Series

KLS9-D Dual Digits Numeric Display Series

PACKAGE DIMENSION	INTERNAL CIRCUIT DIAGRAM
KLS9D-5624 Series 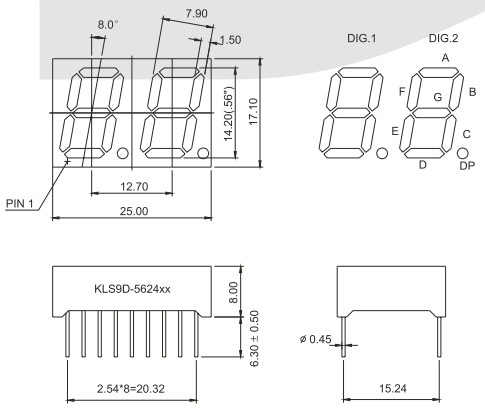	KLS9D-5624Ax KLS9D-5624Bx 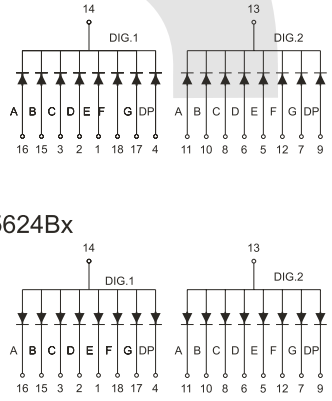
KLS9D-8021 Series 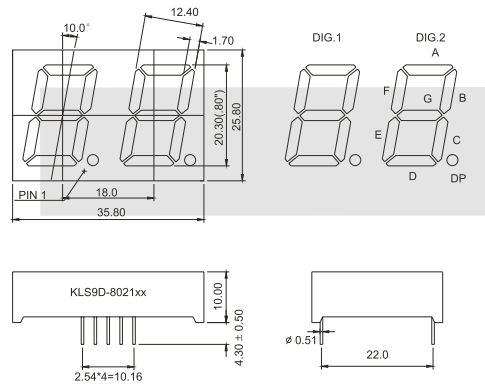	KLS9D-8021Ax KLS9D-8021Bx 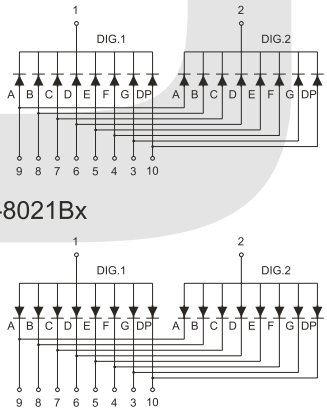
KLS9D-8021 Series 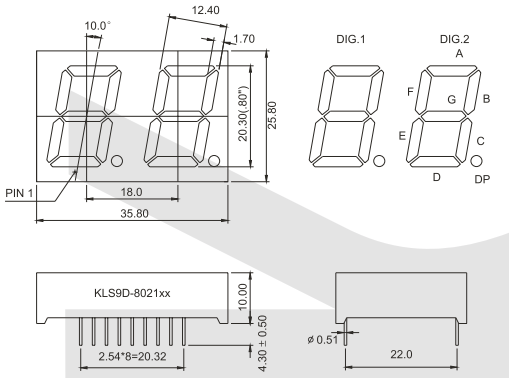	KLS9D-8021Cx KLS9D-8021Dx 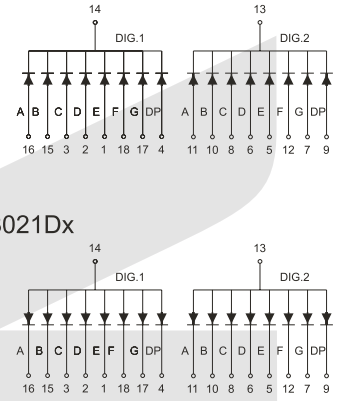

LED NUMERIC DISPLAY Series

KLS9-D Three Digits Numeric Display Series

KLS9	-	D	-	180	1	1	A	EG	-	1	1	-	XXX
1		2		3	4	5	6	7		8	9		10

1. Brank: KLS ELECTRONIC
2. Digit Mode: D-Display
3. Digit Character Height: 180-1.80" May be two symbols (If first X is 0 , neglected)
4. Digit Number: 1- Single digit 2-Dual digit 3-Three digit 4-Four digit
5. Model Number:
6. Drive Mode: A. C. E. ..... - Common Cathode B. D. F. ..... - Common Anode Z-Universal
7. Color Code:

H: Red	GaP/GaP		700nm	UG: High Bright Green	AlGaInP		574nm
S: High Bright Red	GaAlAs/GaAs	SH	660nm	PG: Super Pure Green	AlGaInP		525nm
D: Super Bright Red	GaAlAs/GaAs	DH	660nm	BG: Super Bluish Green	AlGaInP		505nm
UR: Ultra Bright Red	GaAlAs/GaAlAs	DDH	660nm	B: Blue GaN/SiC			430nm
UHR: Ultra Bright Red	AlGaInP		640nm	UB: Super Bright Blue	InGaN/SiC		470nm
E: Orange	GaAsP/GaP		635nm	V: UV	InGaN/SiC		405nm
UE: High Bright Orange	AlGaInP		630nm	W: White			
Y: Yellow	GaAsP/GaP		585nm	EG: Orange+Green Bi-Color			
UY: High Bright Yellow	AlGaInP		590nm	SG: High Red+Green Bi-Color			
G: Green	GaP/GaP		568nm	RGB: Multicolor			

8. Reflector Surface Color: 0-White Surface 1-Black Surface 2-Gray Surface 3-Red Surface
9. Segment Epoxy Color: 0-Water Clear 1-White Diffused 2-Red Diffused
   3-Green Diffused 4-Yellow Diffused
10. Special Device: -Lxx: Pin Length -B: Both Side Decimal Point -N: No Decimal Point

LED NUMERIC DISPLAY Series

KLS9-D Three Digits Numeric DisplaySeries

IX

PACKAGE DIMENSION	INTERNAL CIRCUIT DIAGRAM
KLS9D-2831 Series	KLS9D-2831Ax
KLS9D-2831 Series	KLS9D-2831Bx
KLS9D-3031 Series	KLS9D-3031Ax
KLS9D-3031 Series	KLS9D-3031Bx
KLS9D-3631 Series	KLS9D-3631Ax
KLS9D-3631 Series	KLS9D-3631Bx

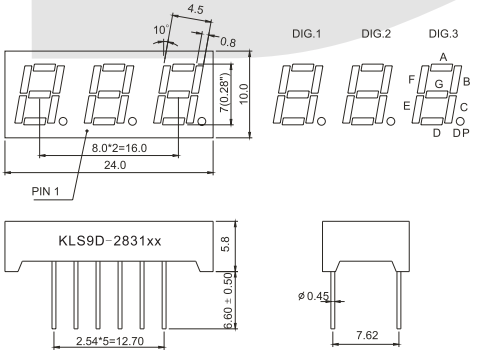

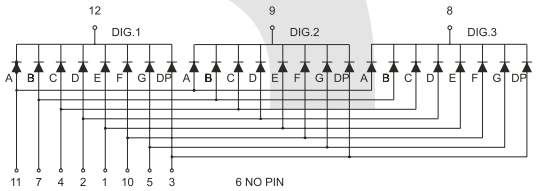

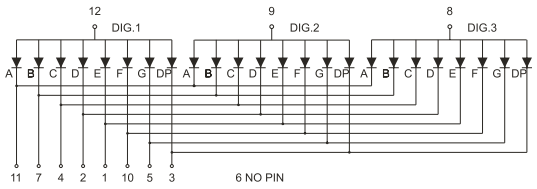

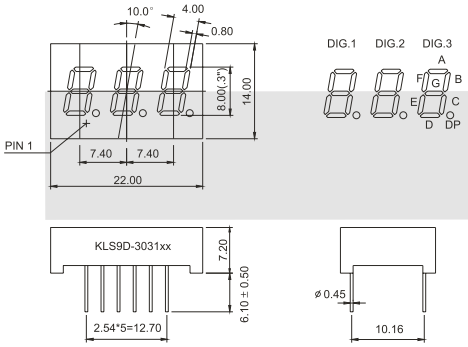

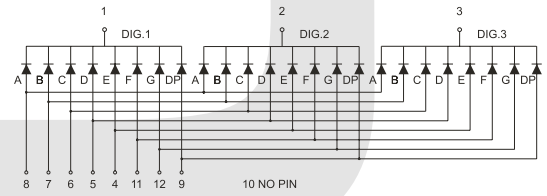

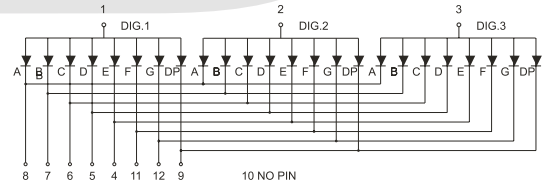

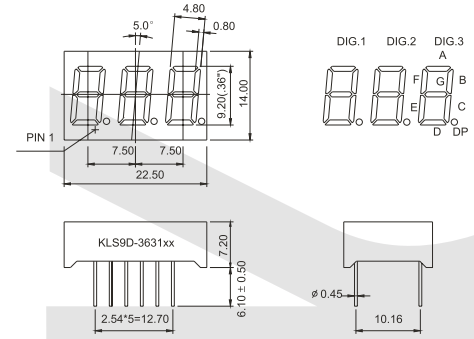

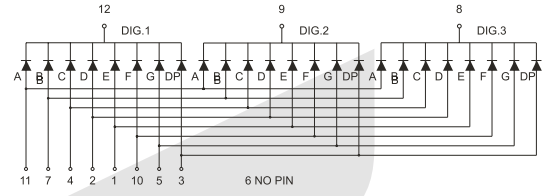

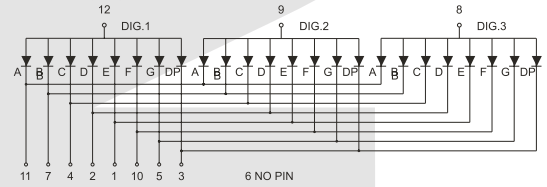

LED NUMERIC DISPLAY Series

KLS9-D Three Digits Numeric Display Series

IX

PACKAGE DIMENSION

KLS9D-4031 Series

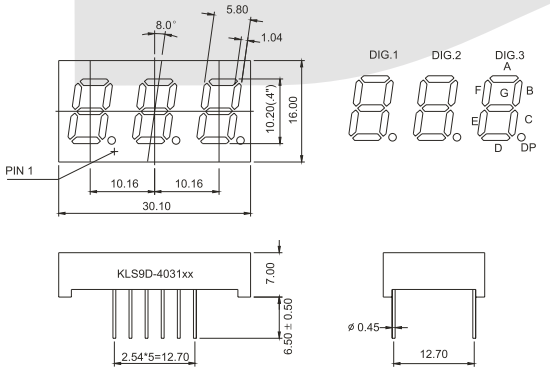

KLS9D-5631 Series

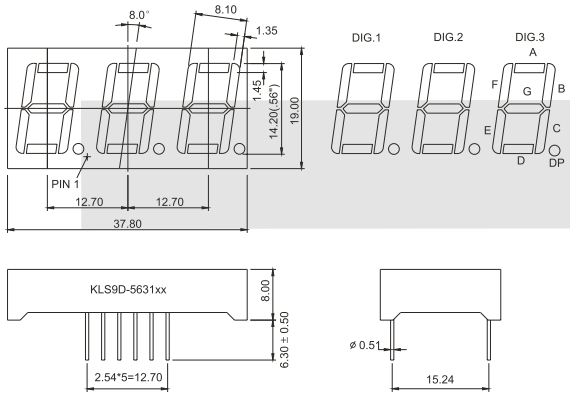

KLS9D-5631 Series

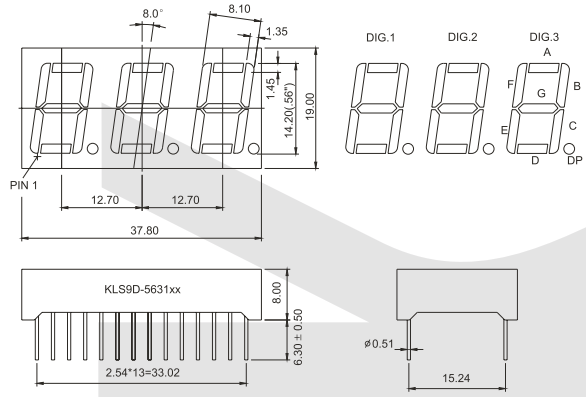

INTERNAL CIRCUIT DIAGRAM

KLS9D-4031Ax

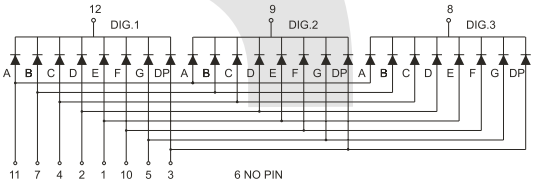

KLS9D-4031Bx

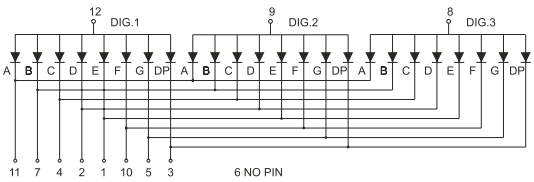

KLS9D-5631Ax

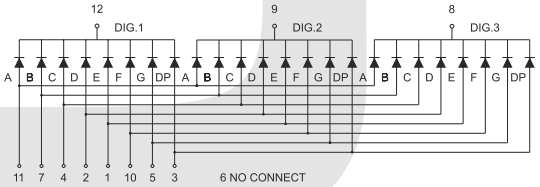

KLS9D-5631Bx

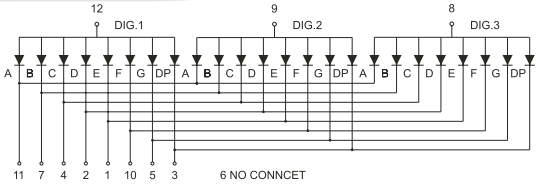

KLS9D-5631Cx

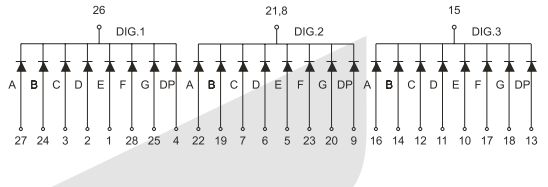

KLS9D-5631Dx

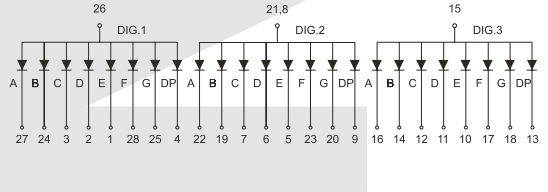

LED NUMERIC DISPLAY Series

KLS9-D Three Digits Numeric Display Series

IX

PACKAGE DIMENSION	INTERNAL CIRCUIT DIAGRAM
KLS9D-5631 Series 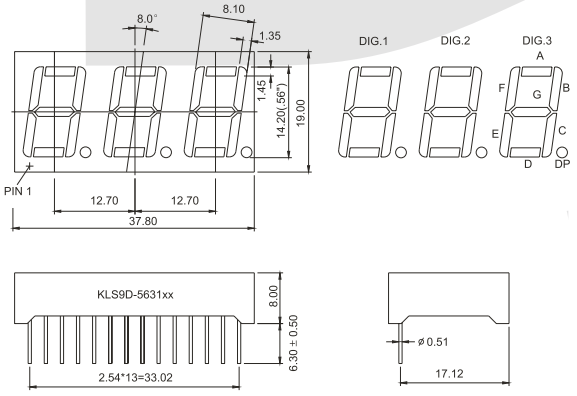	KLS9D-5631Ex 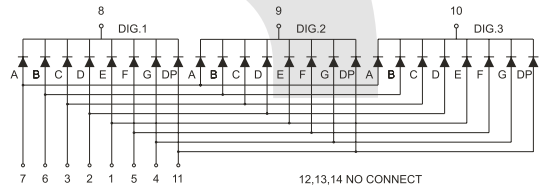 KLS9D-5631Fx 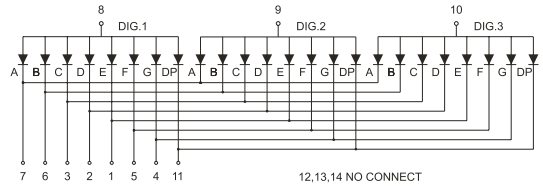
KLS9D-5631 Series 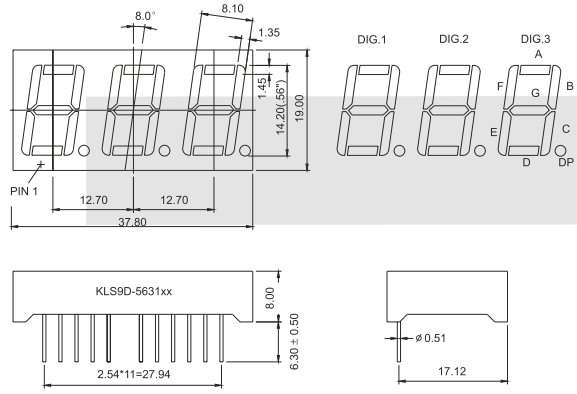	KLS9D-5631Gx 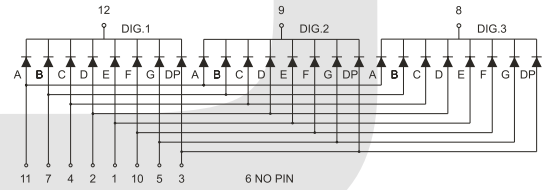 KLS9D-5631Hx 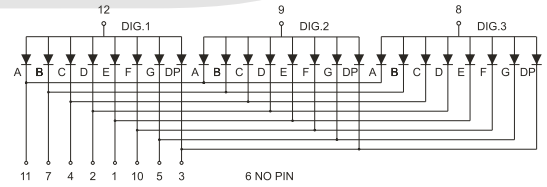
KLS9D-8031 Series 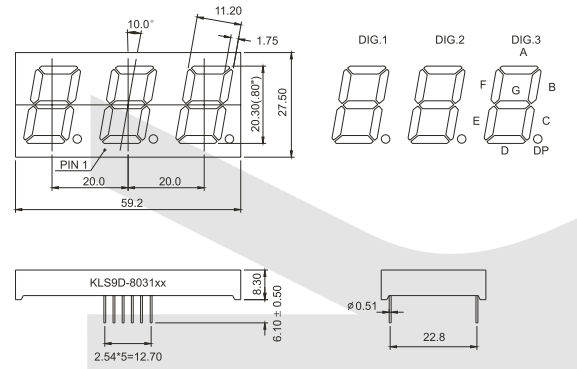	KLS9D-8031Ax 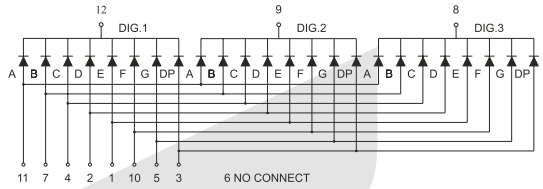 KLS9D-8031Bx 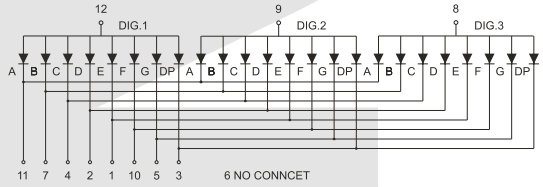

LED NUMERIC DISPLAY Series

KLS9-D Four Digits Numeric Display Series

KLS9 - D - 180 1 1 A EG - 1 1 - XXX
1 2 3 4 5 6 7 8 9 10

1. Brank: KLS ELECTRONIC
2. Digit Mode: D-Display
3. Digit Character Height: 180-1.80" May be two symbols (If first X is 0 , neglected)
4. Digit Number: 1- Single digit 2-Dual digit 3-Three digit 4-Four digit
5. Model Number:
6. Drive Mode: A. C. E. ..... - Common Cathode B. D. F. ..... - Common Anode Z-Universal
7. Color Code:

H: Red	GaP/GaP		700nm	UG: High Bright Green	AlGaInP		574nm
S: High Bright Red	GaAlAs/GaAs	SH	660nm	PG: Super Pure Green	AlGaInP		525nm
D: Super Bright Red	GaAlAs/GaAs	DH	660nm	BG: Super Bluish Green	AlGaInP		505nm
UR: Ultra Bright Red	GaAlAs/GaAlAs	DDH	660nm	B: Blue GaN/SiC			430nm
UHR: Ultra Bright Red	AlGaInP		640nm	UB: Super Bright Blue	InGaN/SiC		470nm
E: Orange	GaAsP/GaP		635nm	V: UV	InGaN/SiC		405nm
UE: High Bright Orange	AlGaInP		630nm	W: White			
Y: Yellow	GaAsP/GaP		585nm	EG: Orange+Green Bi-Color			
UY: High Bright Yellow	AlGaInP		590nm	SG: High Red+Green Bi-Color			
G: Green	GaP/GaP		568nm	RGB: Multicolor			

8. Reflector Surface Color: 0-White Surface 1-Black Surface 2-Gray Surface 3-Red Surface
9. Segment Epoxy Color: 0-Water Clear 1-White Diffused 2-Red Diffused
   3-Green Diffused 4-Yellow Diffused
10. Special Device: -Lxx: Pin Length -B: Both Side Decimal Point -N: No Decimal Point

LED NUMERIC DISPLAY Series

KLS9-D Four Digits Numeric Display Series

PACKAGE DIMENSION	INTERNAL CIRCUIT DIAGRAM
KLS9D-2541 Series	KLS9D-2541Ax
KLS9D-2541 Series	KLS9D-2541Cx
KLS9D-2841 Series	KLS9D-2841Ax

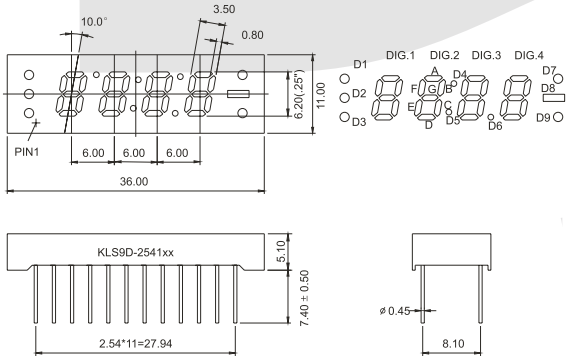

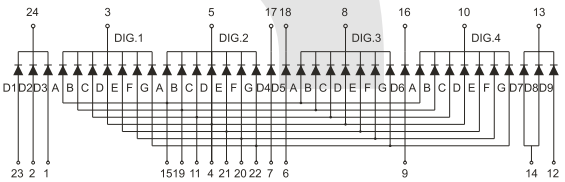

KLS9D-2541Bx

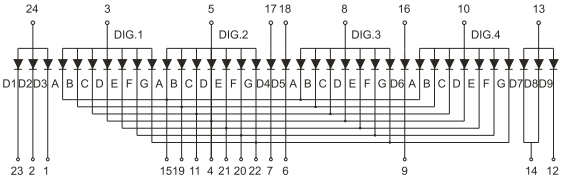

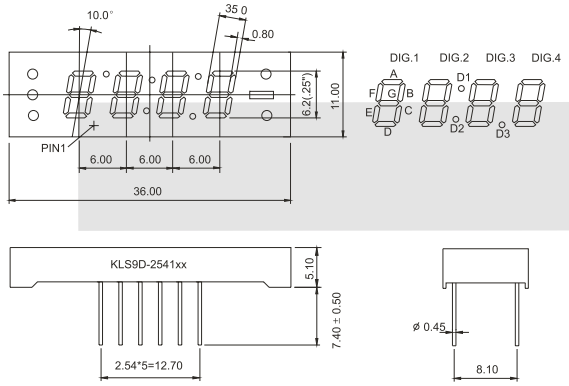

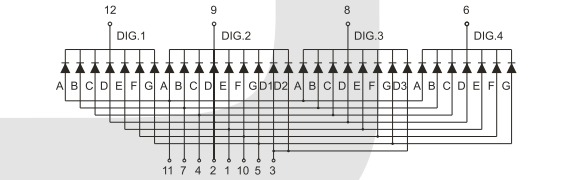

KLS9D-2541Dx

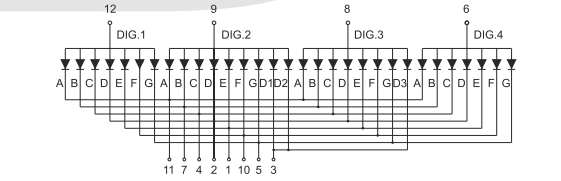

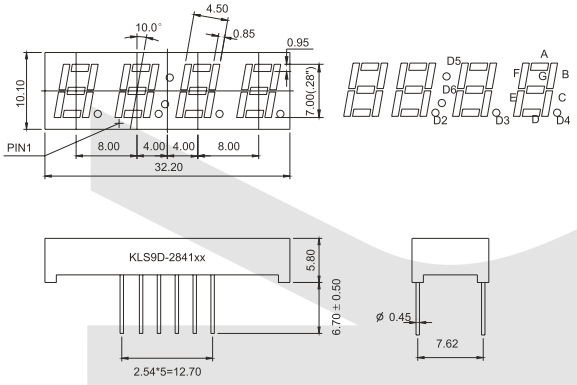

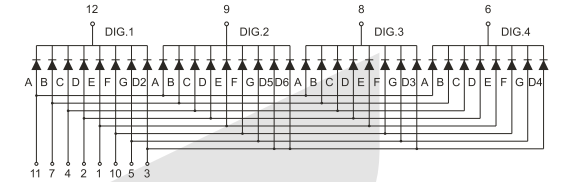

KLS9D-2841Bx

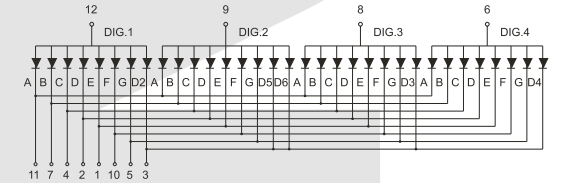

LED NUMERIC DISPLAY Series

KLS9-D Four Digits Numeric Display Series

IX

PACKAGE DIMENSION

KLS9D-2841 Series

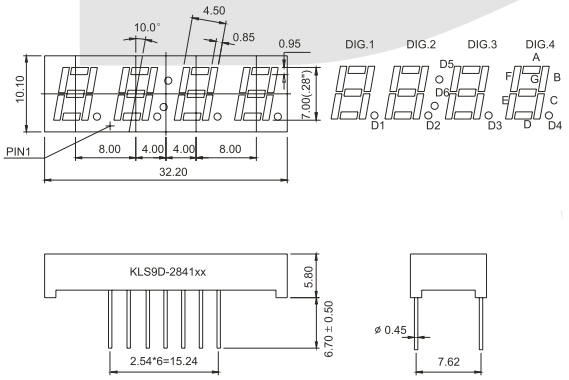

KLS9D-2841 Series

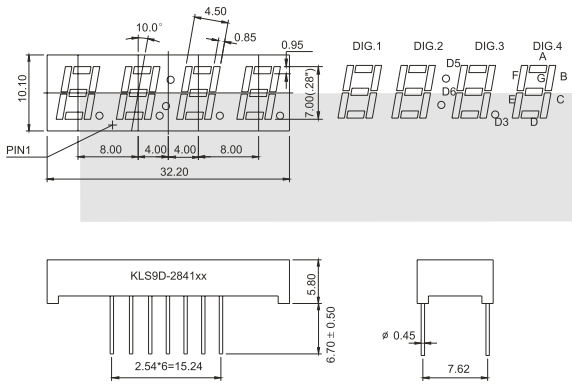

KLS9D-3041 Series

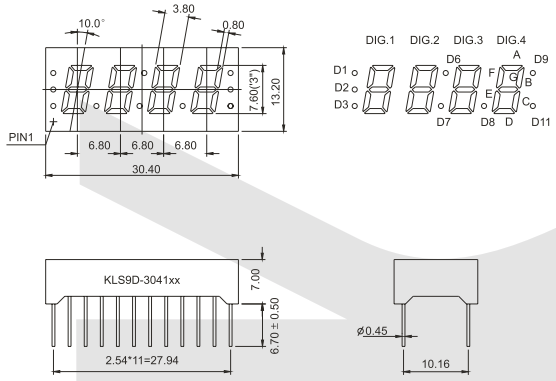

INTERNAL CIRCUIT DIAGRAM

KLS9D-2841Cx

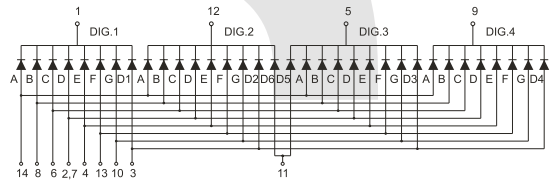

KLS9D-2841Dx

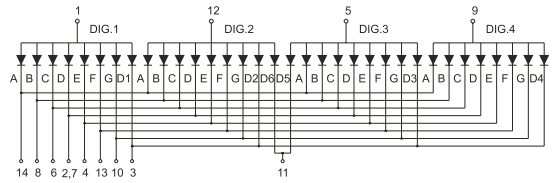

KLS9D-2841Ex

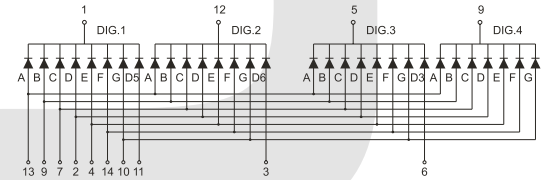

KLS9D-2841Fx

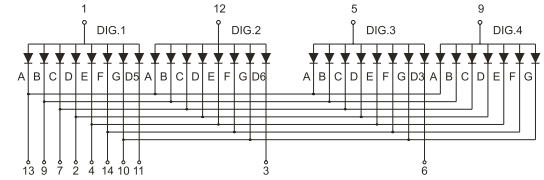

KLS9D-3041Ax

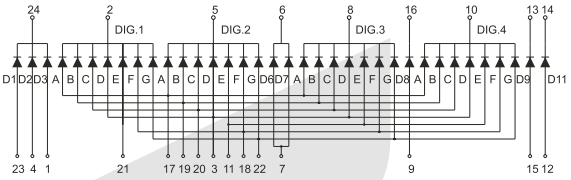

KLS9D-3041Bx

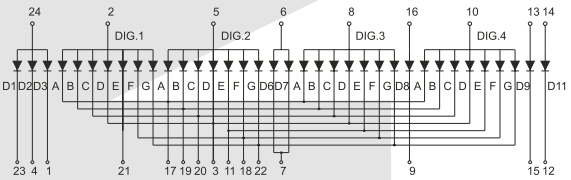

LED NUMERIC DISPLAY Series

KLS9-D Four Digits Numeric Display Series

IX

PACKAGE DIMENSION

KLS9D-3341 Series

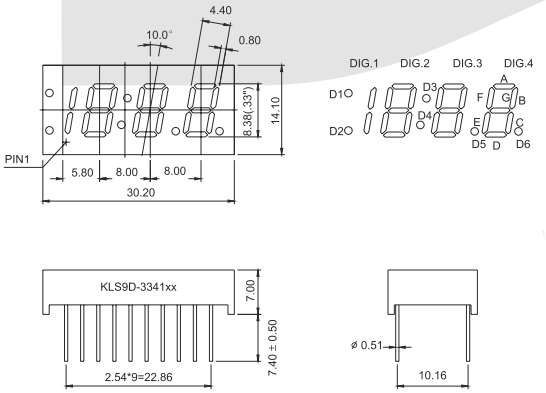

KLS9D-3641 Series

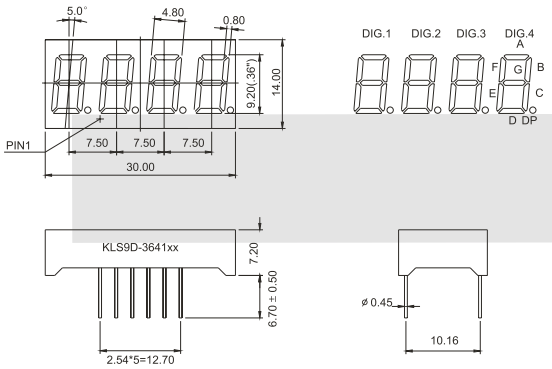

KLS9D-3941 Series

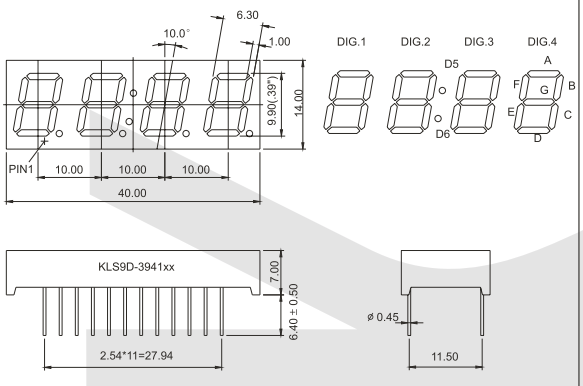

INTERNAL CIRCUIT DIAGRAM

KLS9D-3341Ax

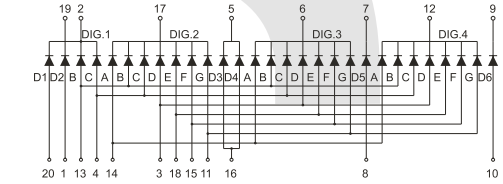

KLS9D-3341Bx

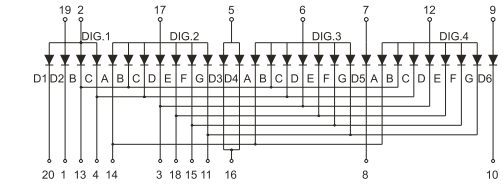

KLS9D-3641Ax

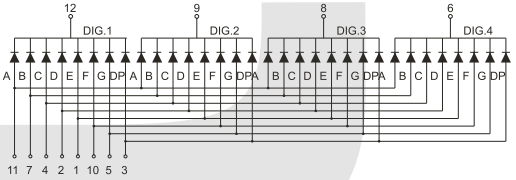

KLS9D-3641Bx

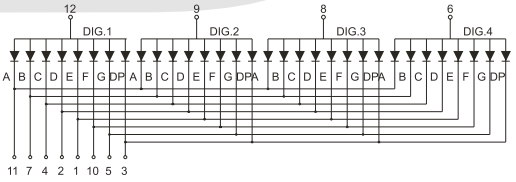

KLS9D-3941Ax

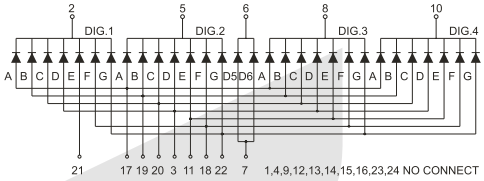

KLS9D-3941Bx

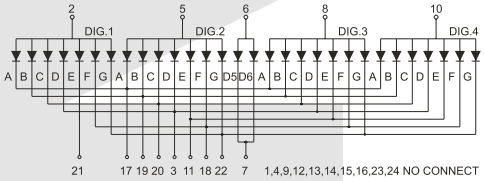

LED NUMERIC DISPLAY Series

KLS9-D Four Digits Numeric Display Series

PACKAGE DIMENSION	INTERNAL CIRCUIT DIAGRAM
KLS9D-4041 Series	KLS9D-4041Ax
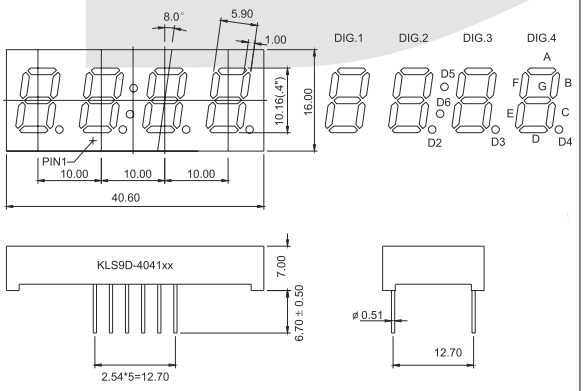	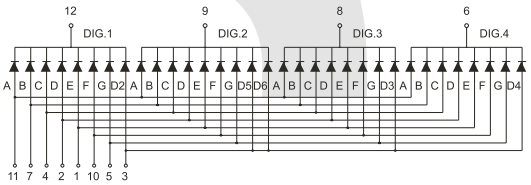
	KLS9D-4041Bx
	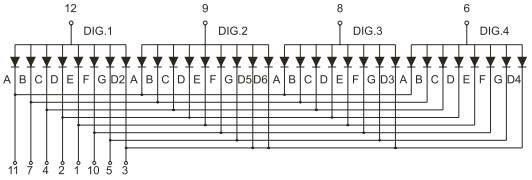
KLS9D-4042 Series	KLS9D-4042Ax
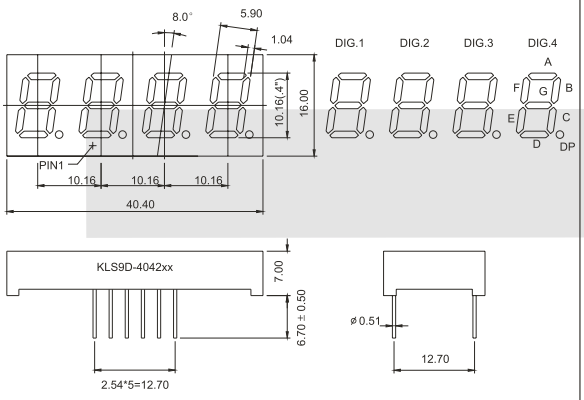	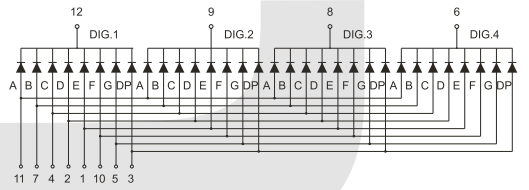
	KLS9D-4042Bx
	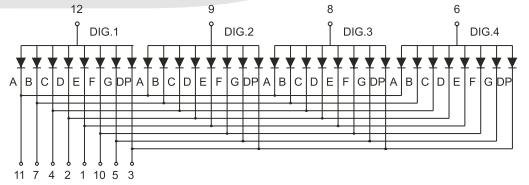
KLS9D-4042 Series	KLS9D-4042Cx
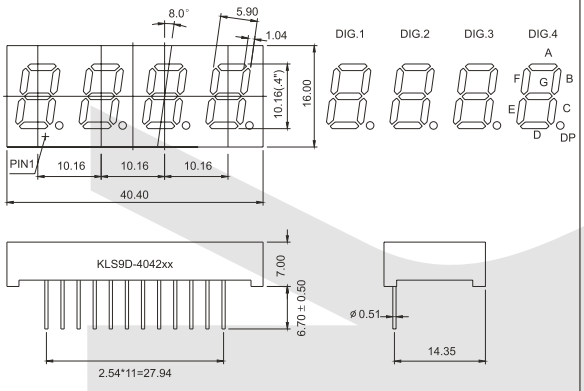	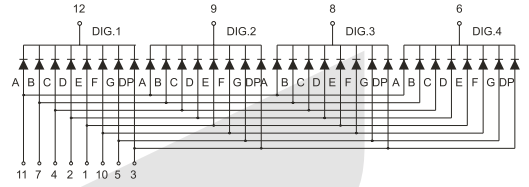
	KLS9D-4042Dx
	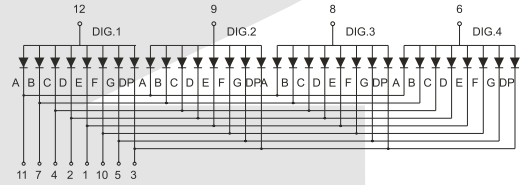

LED NUMERIC DISPLAY Series

KLS9-D Four Digits Numeric Display Series

IX

PACKAGE DIMENSION

KLS9D-5641 Series

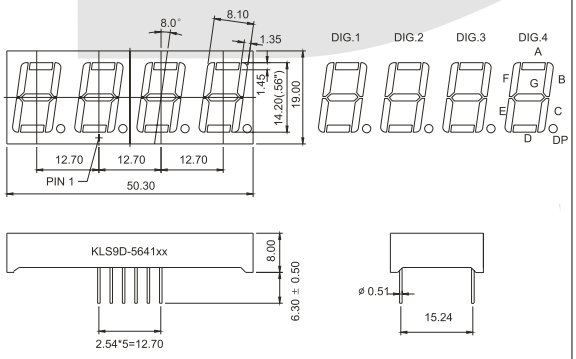

KLS9D-5642 Series

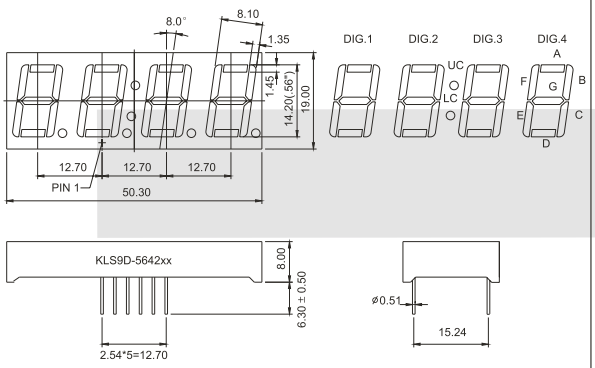

KLS9D-5643 Series

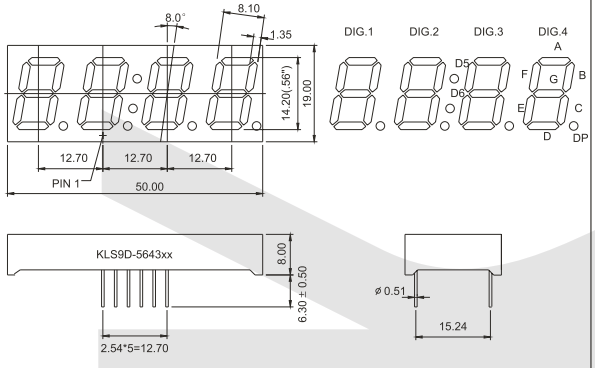

INTERNAL CIRCUIT DIAGRAM

KLS9D-5641Ax

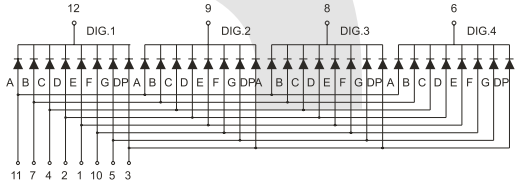

KLS9D-5641Bx

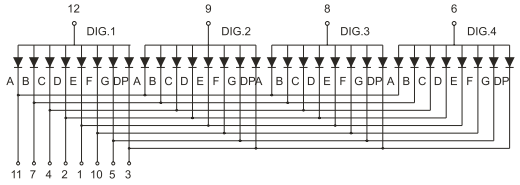

KLS9D-5642Ax

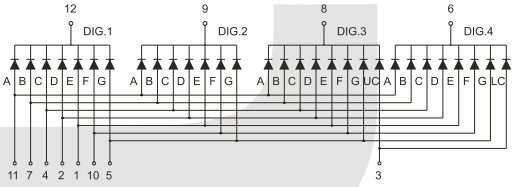

KLS9D-5642Bx

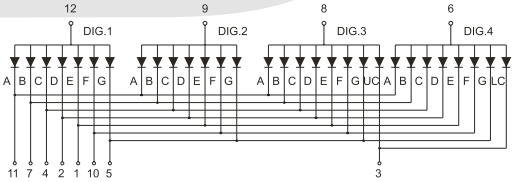

KLS9D-5643Ax

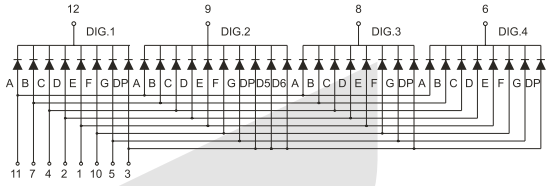

KLS9D-5643Bx

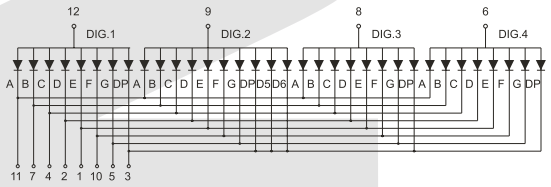

LED NUMERIC DISPLAY Series

KLS9-D Digit Alphanumeric Display Series

KLS9 - D - 180 1 1 A EG - 1 1 - XXX
1 2 3 4 5 6 7 8 9 10

1. Brank: KLS ELECTRONIC
2. Digit Mode: D-Display
3. Digit Character Height: 180-1.80" May be two symbols (If first X is 0 , neglected)
4. Digit Number: 1- Single digit 2-Dual digit 3-Three digit 4-Four digit
5. Model Number:
6. Drive Mode: A. C. E. ..... - Common Cathode B. D. F. ..... - Common Anode Z-Universal
7. Color Code:

H: Red	GaP/GaP		700nm	UG: High Bright Green	AlGaInP		574nm
S: High Bright Red	GaAlAs/GaAs	SH	660nm	PG: Super Pure Green	AlGaInP		525nm
D: Super Bright Red	GaAlAs/GaAs	DH	660nm	BG: Super Bluish Green	AlGaInP		505nm
UR: Ultra Bright Red	GaAlAs/GaAlAs	DDH	660nm	B: Blue GaN/SiC			430nm
UHR: Ultra Bright Red	AlGaInP		640nm	UB: Super Bright Blue	InGaN/SiC		470nm
E: Orange	GaAsP/GaP		635nm	V: UV	InGaN/SiC		405nm
UE: High Bright Orange	AlGaInP		630nm	W: White			
Y: Yellow	GaAsP/GaP		585nm	EG: Orange+Green Bi-Color			
UY: High Bright Yellow	AlGaInP		590nm	SG: High Red+Green Bi-Color			
G: Green	GaP/GaP		568nm	RGB: Multicolor			

8. Reflector Surface Color: 0-White Surface 1-Black Surface 2-Gray Surface 3-Red Surface
9. Segment Epoxy Color: 0-Water Clear 1-White Diffused 2-Red Diffused
   3-Green Diffused 4-Yellow Diffused
10. Special Device: -Lxx: Pin Length -B: Both Side Decimal Point -N: No Decimal Point

LED NUMERIC DISPLAY Series

KLS9-D Digit Alphanumeric Display Series

IX

PACKAGE DIMENSION	INTERNAL CIRCUIT DIAGRAM
KLS9D-5013 Series	KLS9D-5013Ax
KSL9D-5013 Series	KLS9D-5013Bx
KLS9D-8013 Series	KLS9D-5013Cx
	KLS9D-5013Dx
	KLS9D-8013Ax
	KLS9D-8013Bx

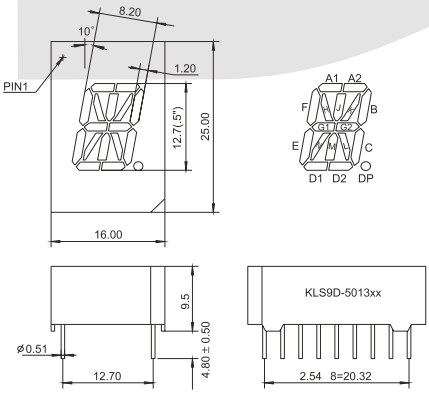

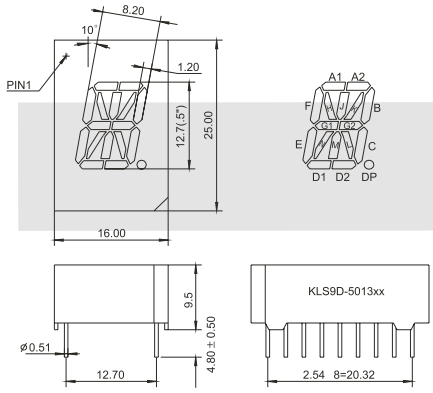

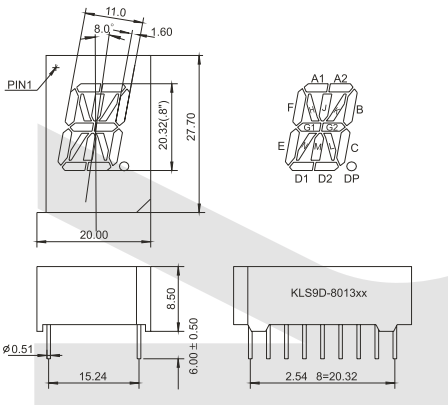

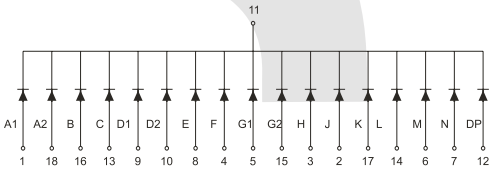

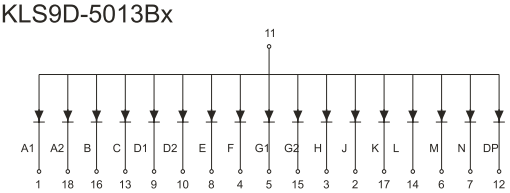

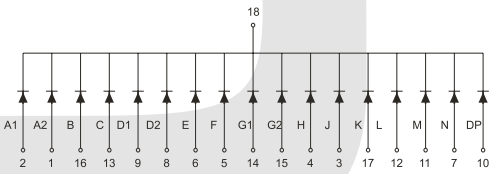

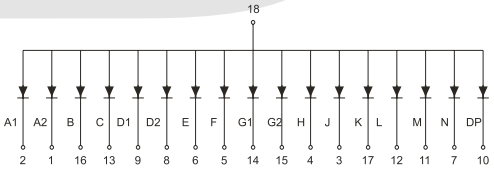

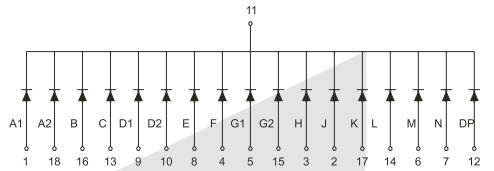

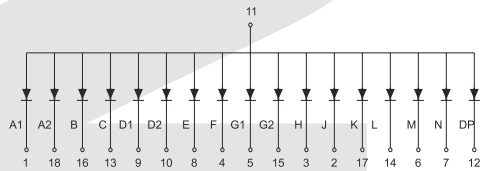

LED NUMERIC DISPLAY Series

KLS9-D Digit Alphanumeric Display Series

PACKAGE DIMENSION	INTERNAL CIRCUIT DIAGRAM
KLS9D-10013 Series	KLS9D-10013Ax
KLS9D-12012 Series	KLS9D-12012Ax
KLS9D-15012 Series	KLS9D-15012Ax

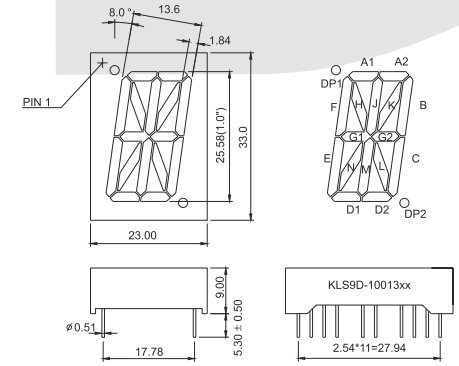

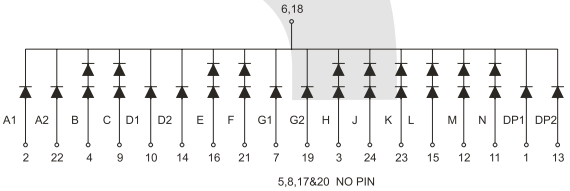

KLS9D-10013Bx

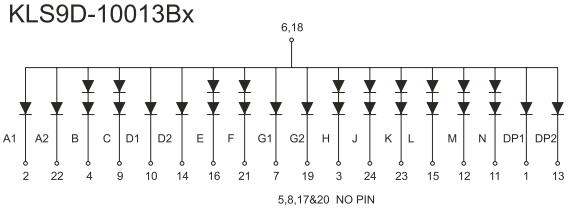

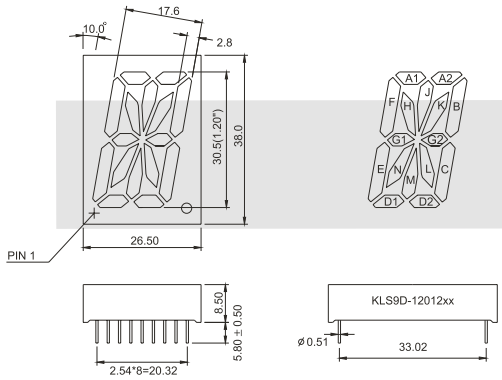

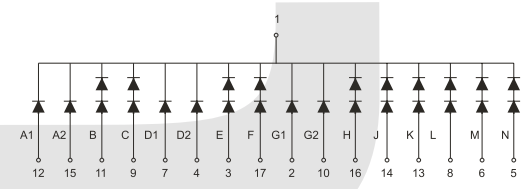

KLS9D-12012Bx

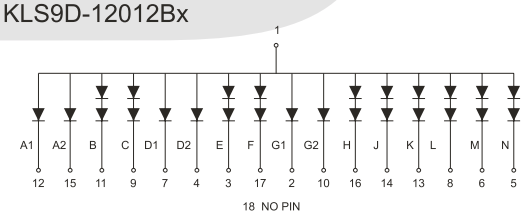

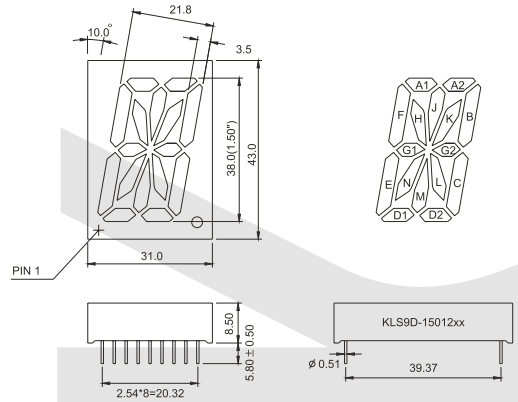

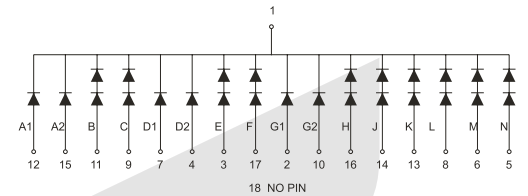

KLS9D-15012Bx

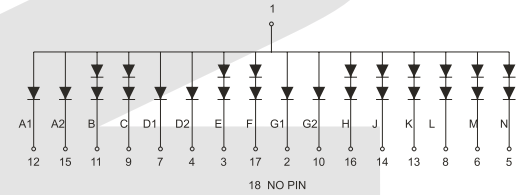

LED NUMERIC DISPLAY Series

KLS9-D Digit Alphanumeric Display Series

PACKAGE DIMENSION

KLS9D-5421 Series

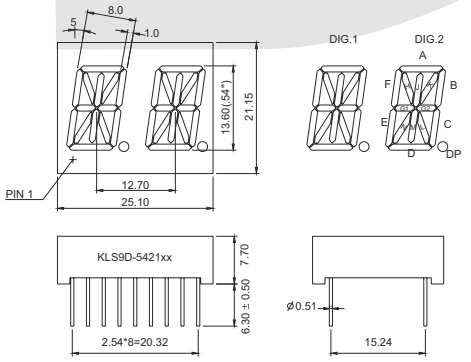

INTERNAL CIRCUIT DIAGRAM

KLS9D-5421Ax

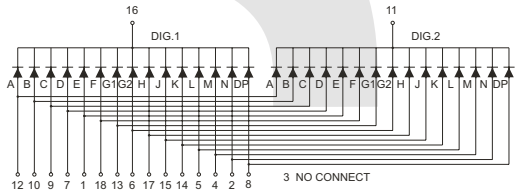

KLS9D-5421Bx

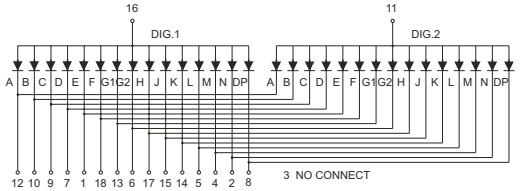

LED DOT MATRIX DISPLAY Series

KLS9-M LED DOT MATRIX DISPLAY Series

KLS9 - M - 23 8 8 1 A EG - 1 1- XXX

1 2 3 4 5 6 7 8 9 10 11

1. Brank: KLS ELECTRONIC
2. Digit Mode: M-Dot Matrix ML-La mp Dot Matrix
3. Mode Number:
4. Column Number:
5. Row Number:
6. Model Number:
7. Drive Mode: A. C. E. ..... - Common Cathode B. D. F. ..... - Common Anode Z-Universal
8. Color Code:

H: Red	GaP/GaP		700nm	UG: High Bright Green	AlGaInP		574nm
S: High Bright Red	GaAlAs/GaAs	SH	660nm	PG: Super Pure Green	AlGaInP		525nm
D: Super Bright Red	GaAlAs/GaAs	DH	660nm	BG: Super Bluish Green	AlGaInP		505nm
UR: Ultra Bright Red	GaAlAs/GaAlAs	DDH	660nm	B: Blue GaN/SiC			430nm
UHR: Ultra Bright Red	AlGaInP		640nm	UB: Super Bright Blue	InGaN/SiC		470nm
E: Orange	GaAsP/GaP		635nm	V: UV	InGaN/SiC		405nm
UE: High Bright Orange	AlGaInP		630nm	W: White			
Y: Yellow	GaAsP/GaP		585nm	EG: Orange+Green Bi-Color			
UY: High Bright Yellow	AlGaInP		590nm	SG: High Red+Green Bi-Color			
G: Green	GaP/GaP		568nm	RGB: Multicolor			

9. Reflector Surface Color: 0-White Surface 1-Black Surface 2-Gray Surface 3-Red Surface
10. Segment Epoxy Color: 0-Water Clear 1-White Diffused 2-Red Diffused
    3-Green Diffused 4-Yellow Diffused
11. Special Device: -Lxx: Pin Length -B: Both Side Decimal Point -N: No Decimal Point

LED DOT MATRIX DISPLAY Series

KLS9-M LED DOT MATRIX DISPLAY Series

PACKAGE DIMENSION	INTERNAL CIRCUIT DIAGRAM	
KLS9-M-7571 Series	KLS9-M-7571Ax	KLS9-M-7571Bx
KLS9-M-12571 Series	KLS9-M-12571Ax	KLS9-M-12571Bx
KLS9-M-12572 Series	KLS9-M-12572Ax	KLS9-M-12572Bx

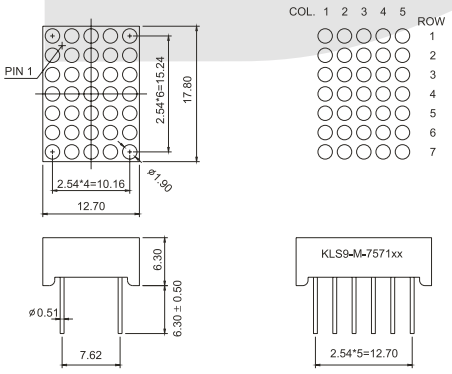

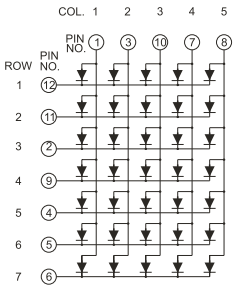

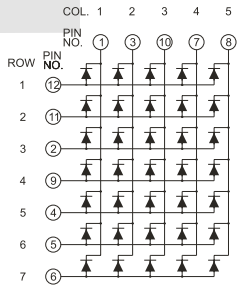

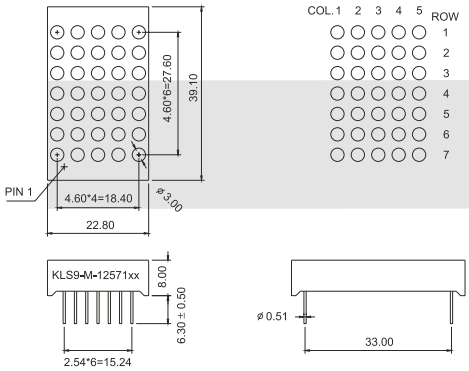

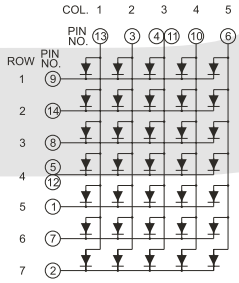

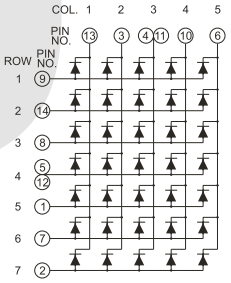

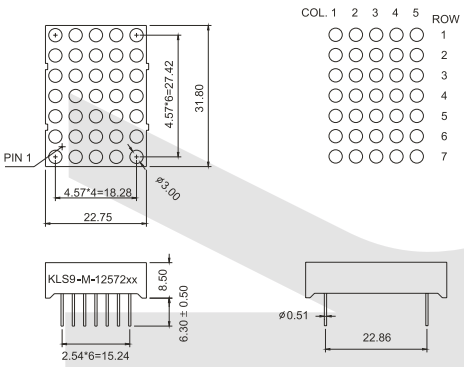

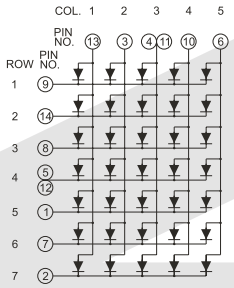

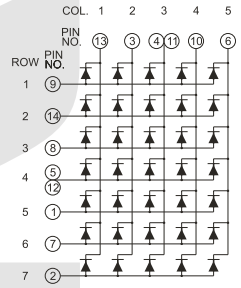

LED DOT MATRIX DISPLAY Series

KLS9-M LED DOT MATRIX DISPLAY Series

PACKAGE DIMENSION	INTERNAL CIRCUIT DIAGRAM
KLS9-M-20571 Series	KLS9-M-20571Ax KLS9-M-20571Bx
KLS9-M-20571 Series	KLS9-M-20571AEG KLS9-M-20571BEG
KLS9-M-20571 Series	KLS9-M-20571CEG KLS9-M-20571DEG

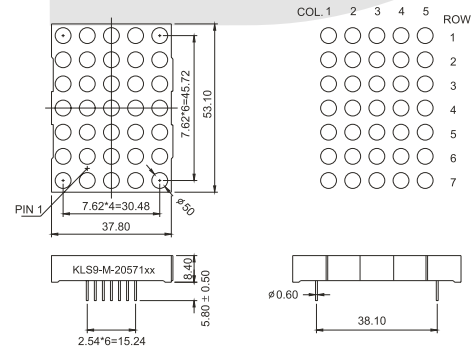

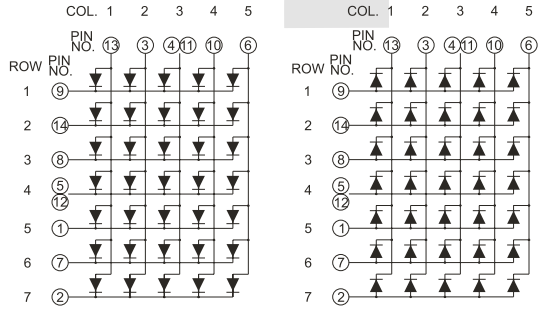

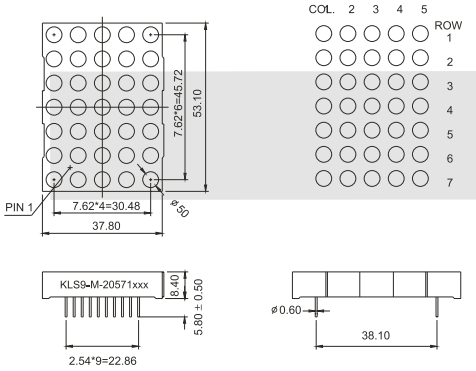

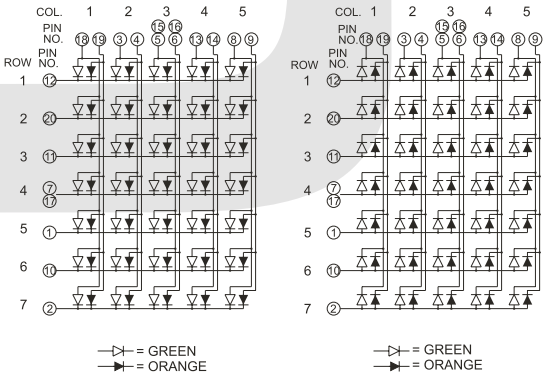

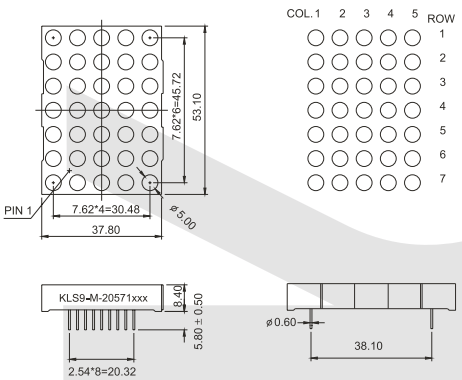

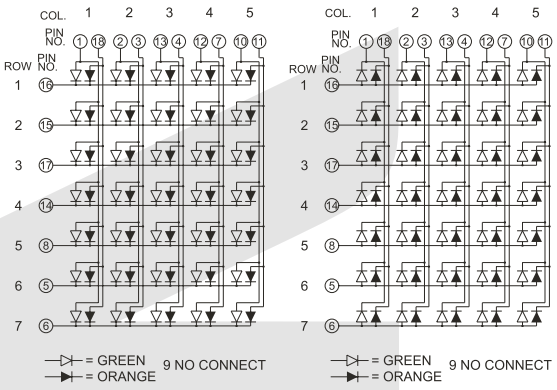

LED DOT MATRIX DISPLAY Series

KLS9-M LED DOT MATRIX DISPLAY Series

PACKAGE DIMENSION	INTERNAL CIRCUIT DIAGRAM
KLS9-M-20571 Series	KLS9-M-20571ARGB KLS9-M-20571BRGB
KLS9-M-30571 Series	KLS9-M-30571Ax KLS9-M-30571Bx
KLS9-M-30571 Series	KLS9-M-30571AEG KLS9-M-30571BEG

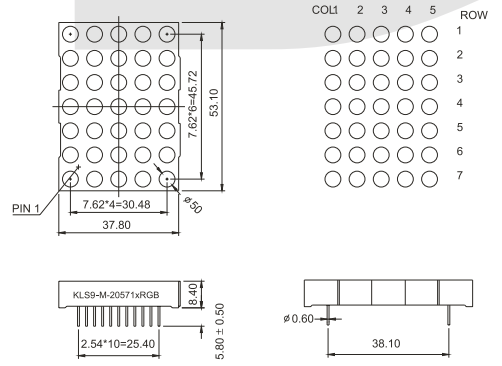

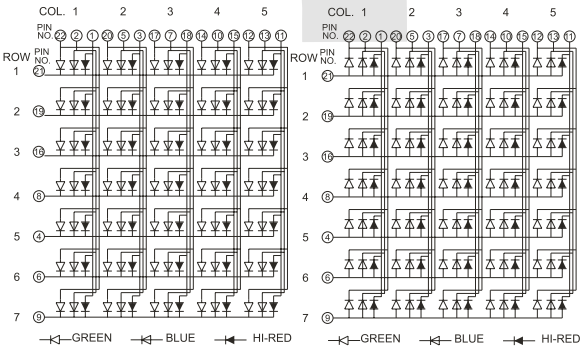

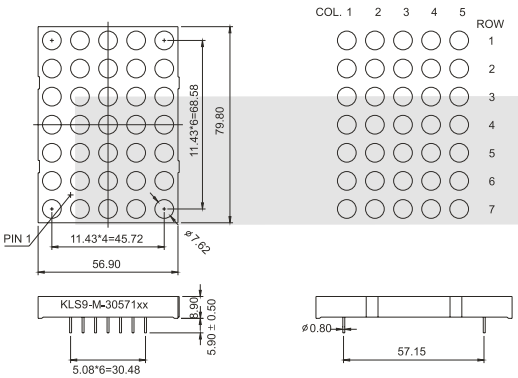

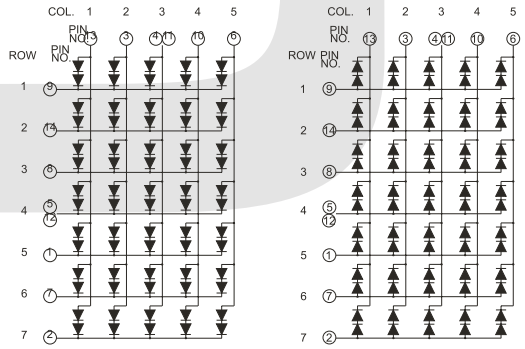

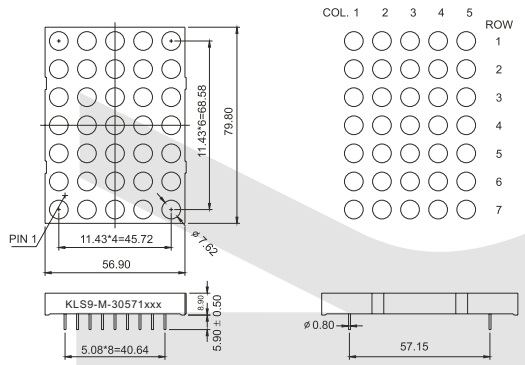

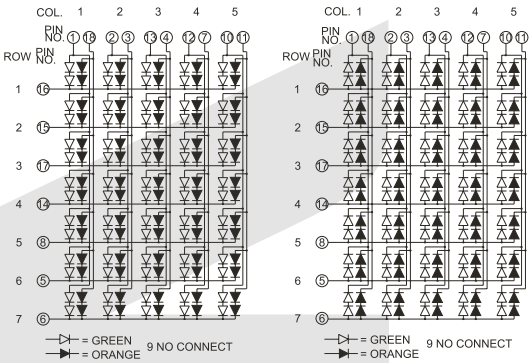

LED DOT MATRIX DISPLAY Series

KLS9-M LED DOT MATRIX DISPLAY Series

PACKAGE DIMENSION	INTERNAL CIRCUIT DIAGRAM
KLS9-M-40571 Series	KLS9-M-40571Ax / KLS9-M-40571Bx
KLS9-M-40571 Series	KLS9-M-40571Cx / KLS9-M-40571Dx
KLS9-M-40571 Series	KLS9-M-40571Axx / KLS9-M-40571Bxx

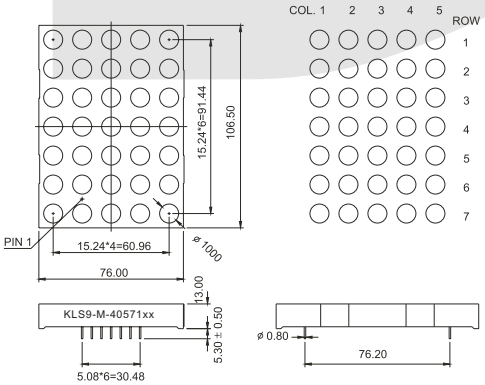

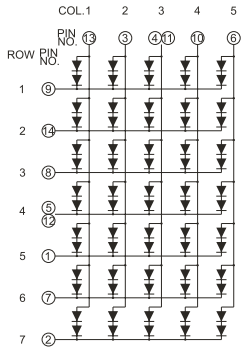

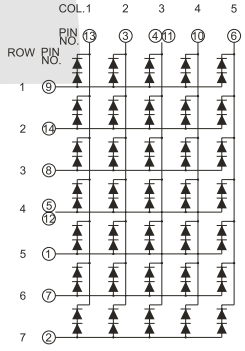

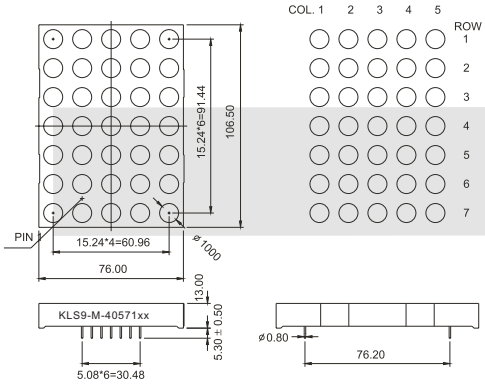

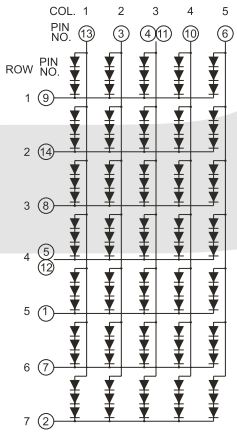

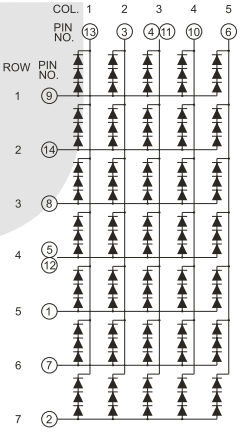

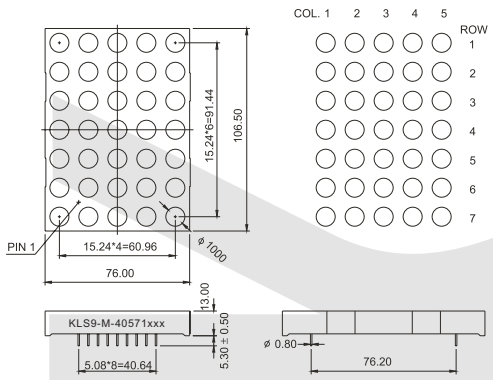

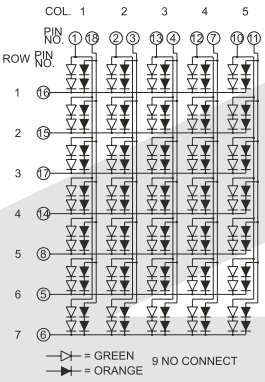

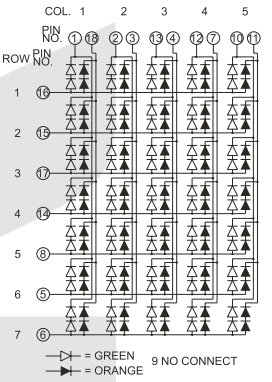

LED DOT MATRIX DISPLAY Series

KLS9-M LED DOT MATRIX DISPLAY Series

KLS9 - M - 23 8 8 1 A EG - 1 1- XXX

1 2 3 4 5 6 7 8 9 10 11

1. Brank: KLS ELECTRONIC
2. Digit Mode: M-Dot Matrix ML-La mp Dot Matrix
3. Mode Number:
4. Column Number:
5. Row Number:
6. Model Number:
7. Drive Mode: A. C. E. ..... - Common Cathode B. D. F. ..... - Common Anode Z-Universal
8. Color Code:

H: Red	GaP/GaP		700nm	UG: High Bright Green	AlGaInP		574nm
S: High Bright Red	GaAlAs/GaAs	SH	660nm	PG: Super Pure Green	AlGaInP		525nm
D: Super Bright Red	GaAlAs/GaAs	DH	660nm	BG: Super Bluish Green	AlGaInP		505nm
UR: Ultra Bright Red	GaAlAs/GaAlAs	DDH	660nm	B: Blue GaN/SiC			430nm
UHR: Ultra Bright Red	AlGaInP		640nm	UB: Super Bright Blue	InGaN/SiC		470nm
E: Orange	GaAsP/GaP		635nm	V: UV	InGaN/SiC		405nm
UE: High Bright Orange	AlGaInP		630nm	W: White			
Y: Yellow	GaAsP/GaP		585nm	EG: Orange+Green Bi-Color			
UY: High Bright Yellow	AlGaInP		590nm	SG: High Red+Green Bi-Color			
G: Green	GaP/GaP		568nm	RGB: Multicolor			

9. Reflector Surface Color: 0-White Surface 1-Black Surface 2-Gray Surface 3-Red Surface
10. Segment Epoxy Color: 0-Water Clear 1-White Diffused 2-Red Diffused
    3-Green Diffused 4-Yellow Diffused
11. Special Device: -Lxx: Pin Length -B: Both Side Decimal Point -N: No Decimal Point

LED DOT MATRIX DISPLAY Series

KLS9-M LED DOT MATRIX DISPLAY Series

PACKAGE DIMENSION	INTERNAL CIRCUIT DIAGRAM
KLS9M-14581 Series	KLS9M-14581Ax KLS9M-14581Bx
KLS9M-23581 Series	KLS9M-23581Ax KLS9M-23581Bx
KLS9M-23581 Series	KLS9M-23581Cx KLS9M-23581Dx

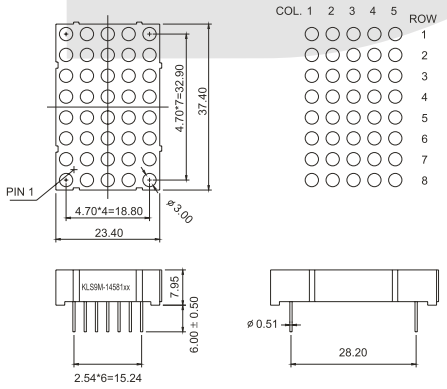

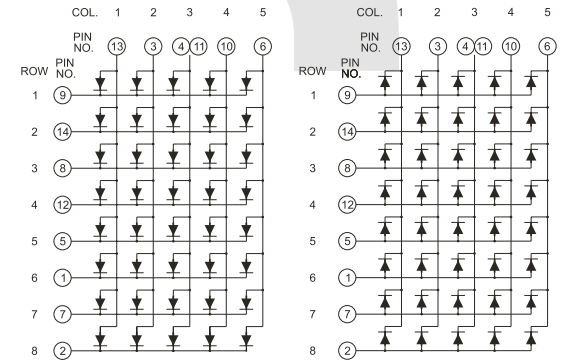

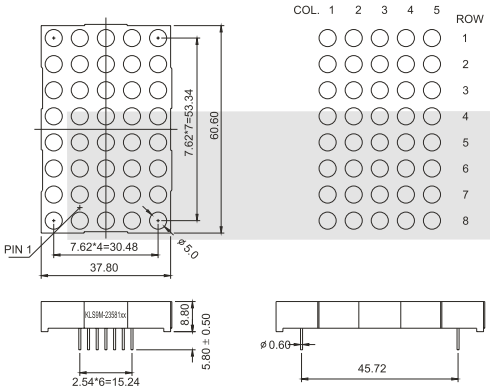

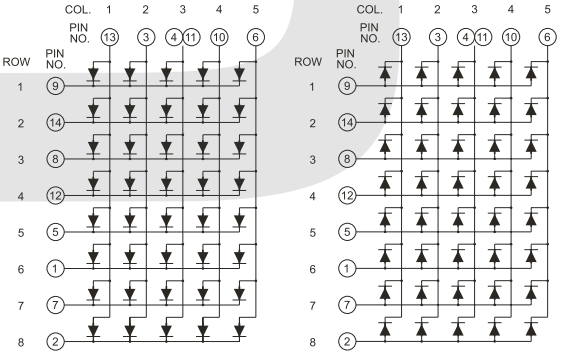

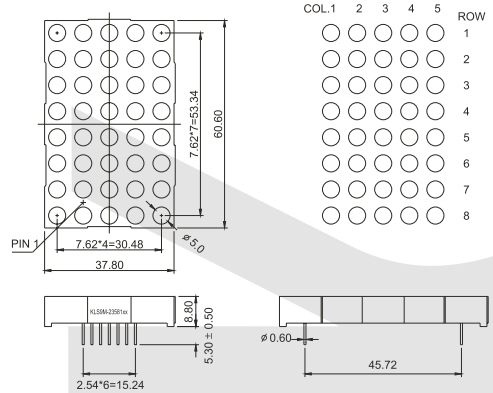

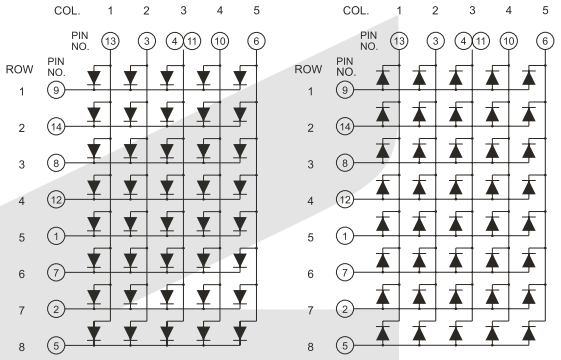

LED DOT MATRIX DISPLAY Series

KLS9-M LED DOT MATRIX DISPLAY Series

PACKAGE DIMENSION	INTERNAL CIRCUIT DIAGRAM
KLS9M-23581 Series	KLS9M-23581AEG / KLS9M-23581BEG
KLS9M-23581 Series	KLS9M-23581CEG / KLS9M-23581DEG
KLS9M-34581 Series	KLS9M-34581Ax / KLS9M-34581Bx

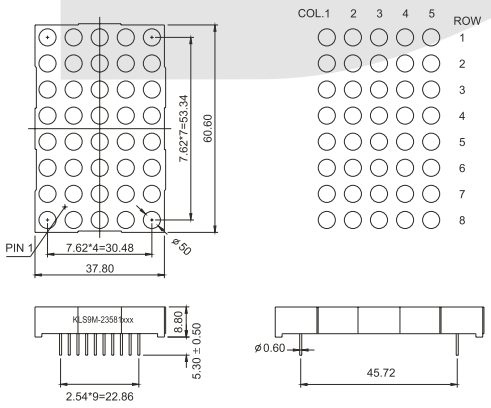

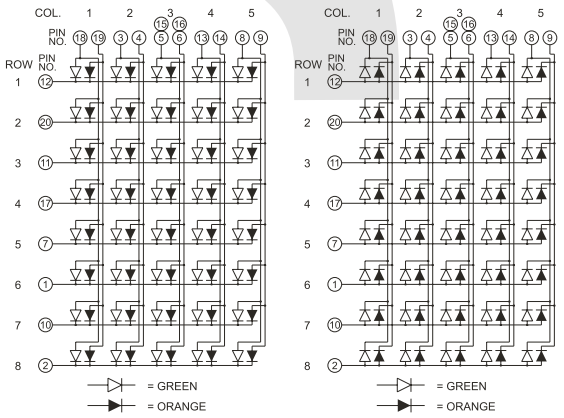

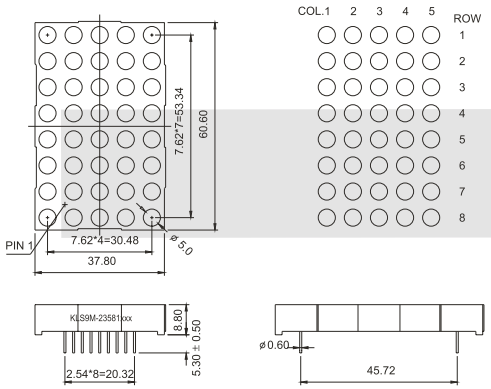

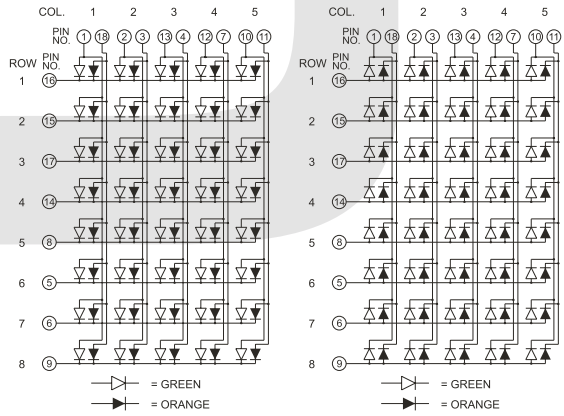

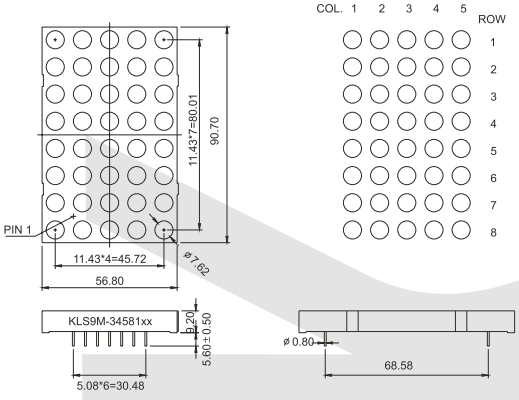

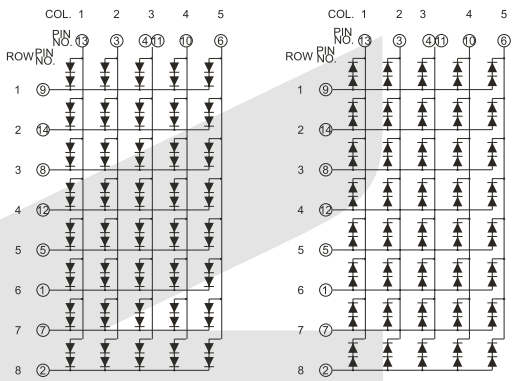

LED DOT MATRIX DISPLAY Series

KLS9-M LED DOT MATRIX DISPLAY Series

PACKAGE DIMENSION	INTERNAL CIRCUIT DIAGRAM
KLS9M-34581 Series	KLS9M-34581Axx / KLS9M-34581Bxx
KLS9M-46581 Series	KLS9M-46581Ax / KLS9M-46581Bx
KLS9M-46581 Series	KLS9M-46581Axx / KLS9M-46581Bxx

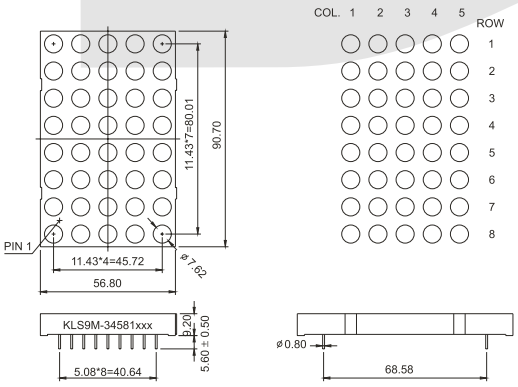

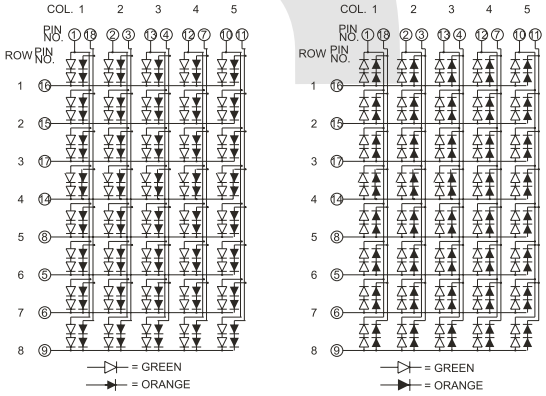

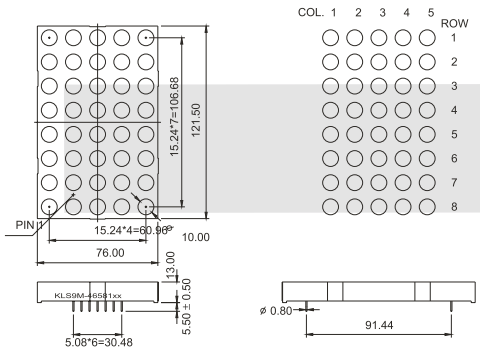

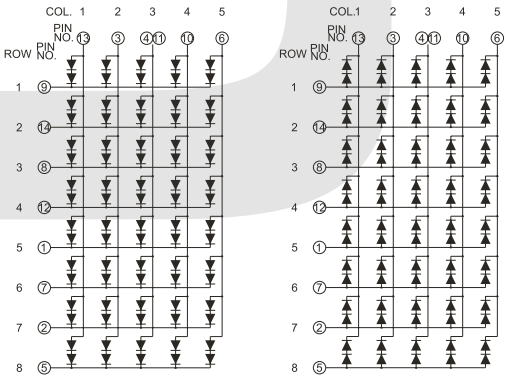

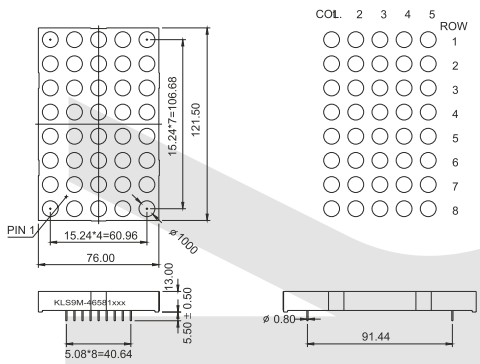

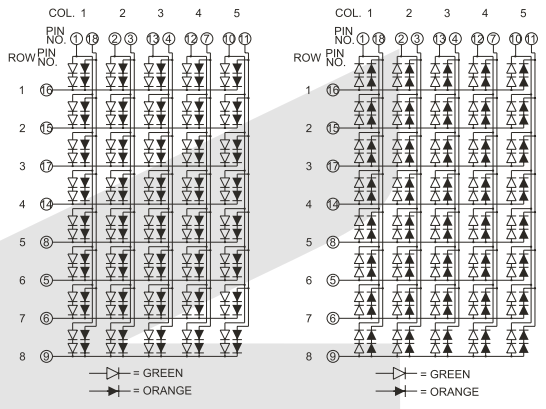

LED DOT MATRIX DISPLAY Series

KLS9-M LED DOT MATRIX DISPLAY Series

KLS9 - M - 23 8 8 1 A EG - 1 1- XXX

1 2 3 4 5 6 7 8 9 10 11

1. Brank: KLS ELECTRONIC
2. Digit Mode: M-Dot Matrix ML-La mp Dot Matrix
3. Mode Number:
4. Column Number:
5. Row Number:
6. Model Number:
7. Drive Mode: A. C. E. ..... - Common Cathode B. D. F. ..... - Common Anode Z-Universal
8. Color Code:

H: Red	GaP/GaP		700nm	UG: High Bright Green	AlGaInP		574nm
S: High Bright Red	GaAlAs/GaAs	SH	660nm	PG: Super Pure Green	AlGaInP		525nm
D: Super Bright Red	GaAlAs/GaAs	DH	660nm	BG: Super Bluish Green	AlGaInP		505nm
UR: Ultra Bright Red	GaAlAs/GaAlAs	DDH	660nm	B: Blue GaN/SiC			430nm
UHR: Ultra Bright Red	AlGaInP		640nm	UB: Super Bright Blue	InGaN/SiC		470nm
E: Orange	GaAsP/GaP		635nm	V: UV	InGaN/SiC		405nm
UE: High Bright Orange	AlGaInP		630nm	W: White			
Y: Yellow	GaAsP/GaP		585nm	EG: Orange+Green Bi-Color			
UY: High Bright Yellow	AlGaInP		590nm	SG: High Red+Green Bi-Color			
G: Green	GaP/GaP		568nm	RGB: Multicolor			

9. Reflector Surface Color: 0-White Surface 1-Black Surface 2-Gray Surface 3-Red Surface
10. Segment Epoxy Color: 0-Water Clear 1-White Diffused 2-Red Diffused
    3-Green Diffused 4-Yellow Diffused
11. Special Device: -Lxx: Pin Length -B: Both Side Decimal Point -N: No Decimal Point

LED DOT MATRIX DISPLAY Series

KLS9-M LED DOT MATRIX DISPLAY Series

PACKAGE DIMENSION	INTERNAL CIRCUIT DIAGRAM
KLS9M-7881 Series	KLS9M-7881Ax　KLS9M-7881Bx
KLS9M-12881 Series	KLS9M-12881Ax　KLS9M-12881Bx
KLS9M-12881 Series	KLS9M-12881AEG　KLS9M-12881BEG

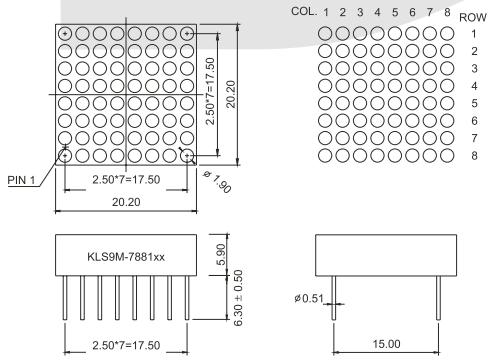

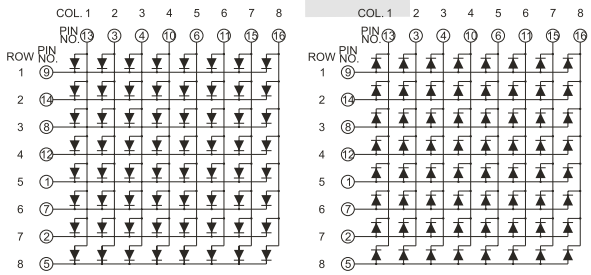

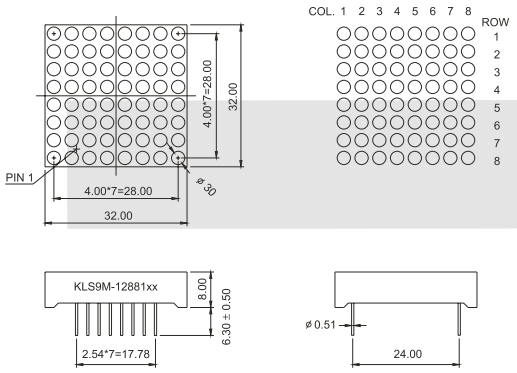

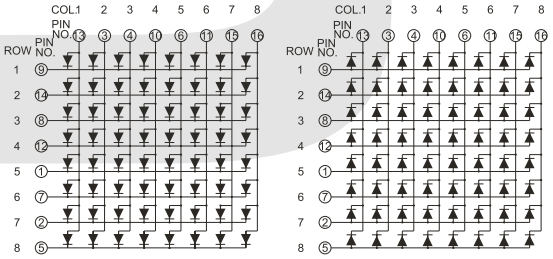

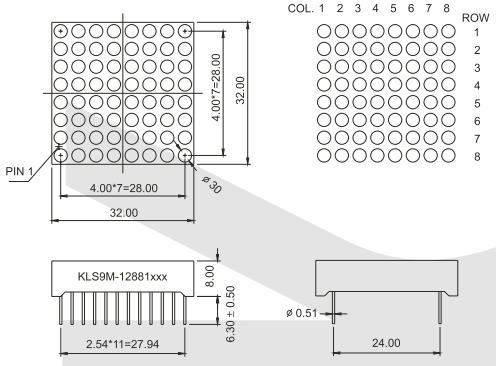

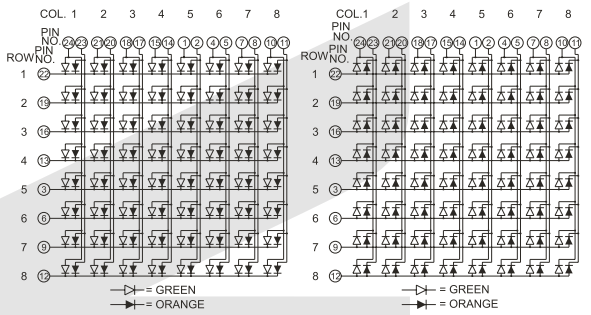

LED DOT MATRIX DISPLAY Series

KLS9-M LED DOT MATRIX DISPLAY Series

PACKAGE DIMENSION	INTERNAL CIRCUIT DIAGRAM
KLS9M-12882 Series	KLS9M-12882Ax KLS9M-12882Bx
KLS9M-12882 Series	KLS9M-12882AEG KLS9M-12882BEG
KLS9M-15881 Series	KLS9M-15881Ax KLS9M-15881Bx

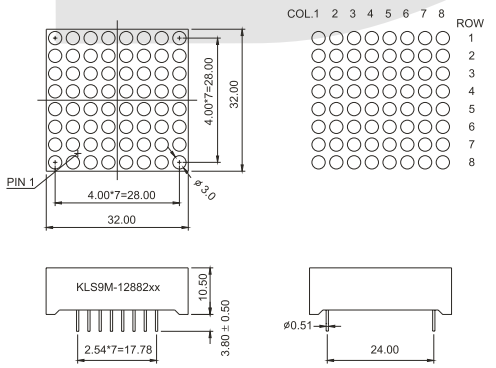

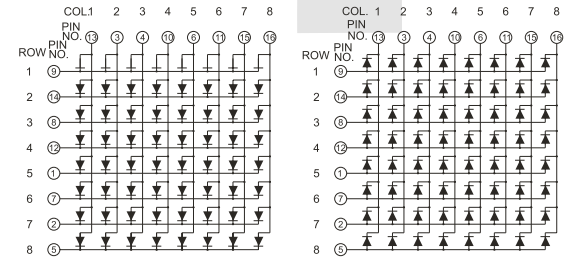

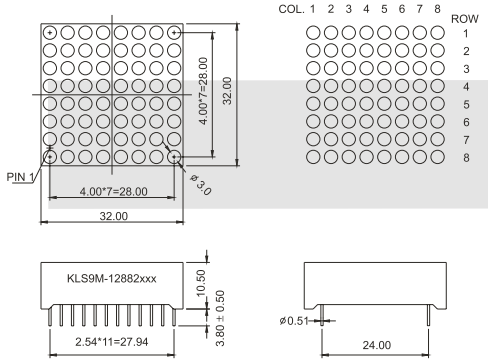

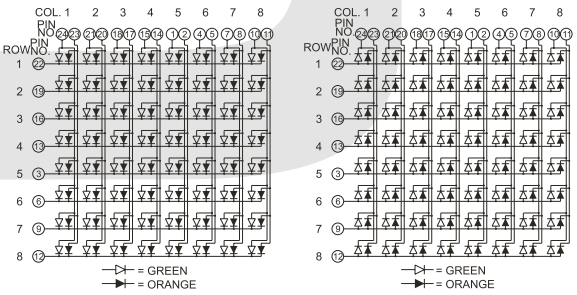

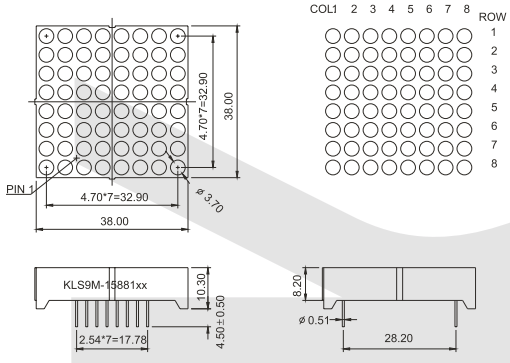

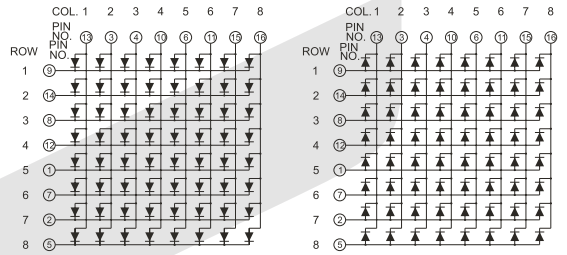

LED DOT MATRIX DISPLAY Series

KLS9-M LED DOT MATRIX DISPLAY Series

PACKAGE DIMENSION	INTERNAL CIRCUIT DIAGRAM
KLS9M-15881 Series	KLS9M-15881AEG / KLS9M-15881BEG
KLS9M-19881 Series	KLS9M-19881Ax / KLS9M-19881Bx
KLS9M-19881 Series	KLS9M-19881Cx / KLS9M-19881Dx

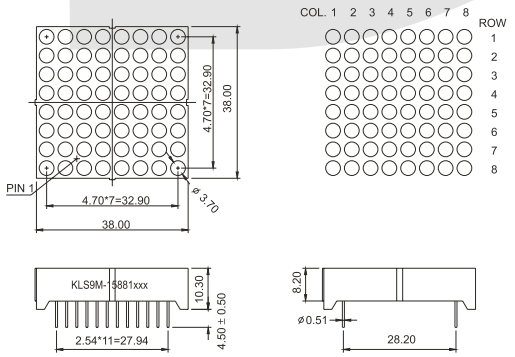

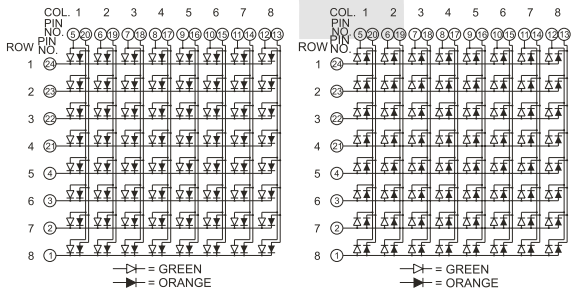

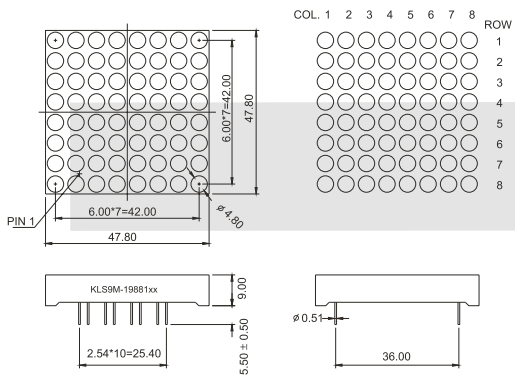

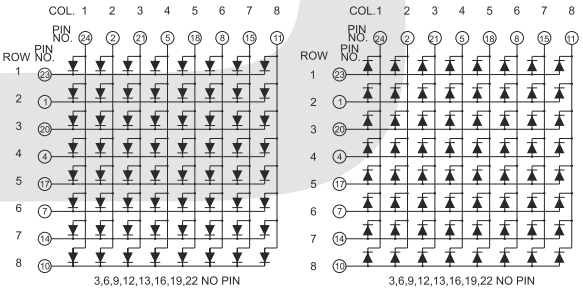

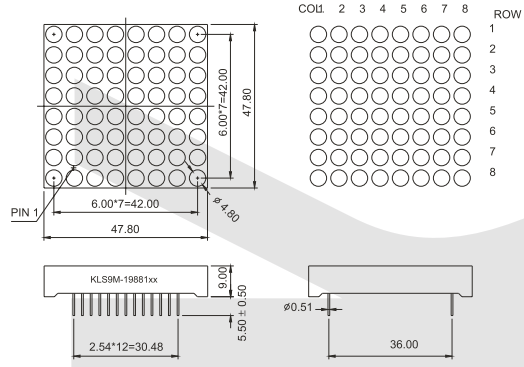

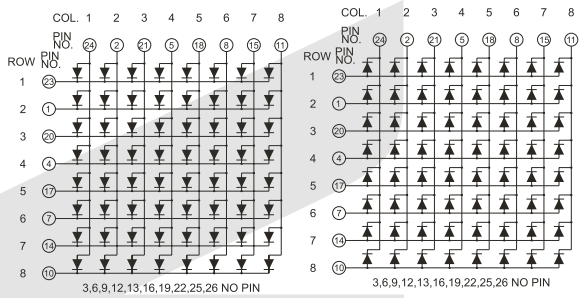

LED DOT MATRIX DISPLAY Series

KLS9-M LED DOT MATRIX DISPLAY Series

PACKAGE DIMENSION	INTERNAL CIRCUIT DIAGRAM
KLS9M-19881 Series	KLS9M-19881AEG KLS9M-19881BEG
KLS9M-19881 Series	KLS9M-19881CEG KLS9M-19881DEG
KLS9M-19881 Series	KLS9M-19881EEG KLS9M-19881FEG

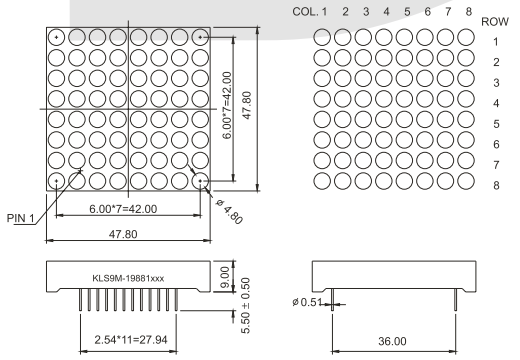

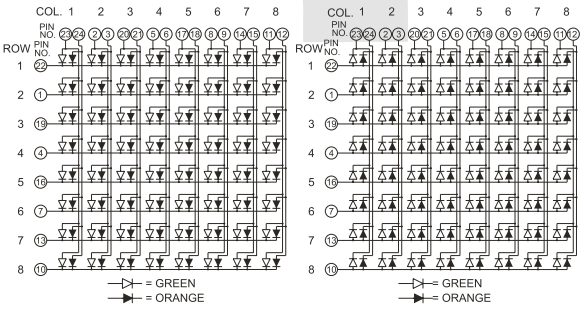

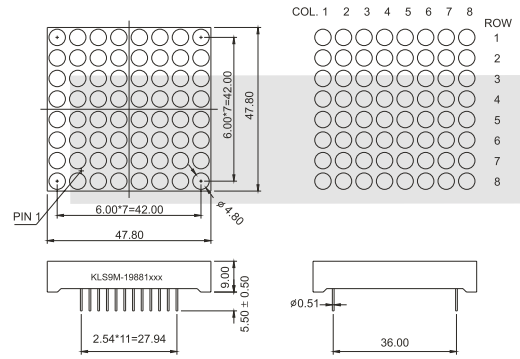

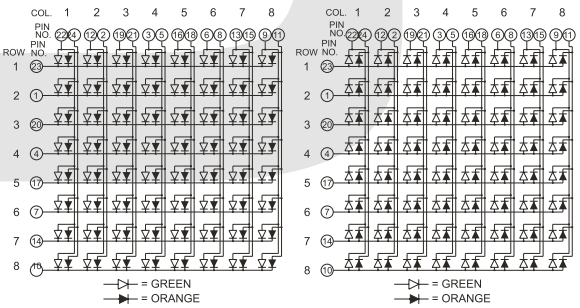

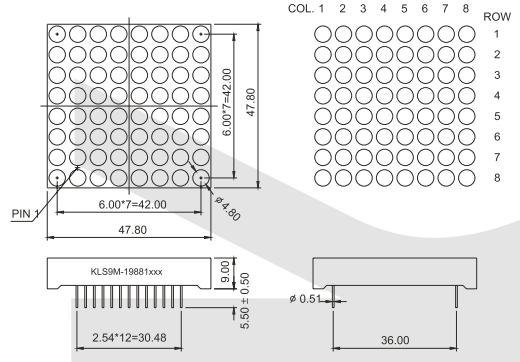

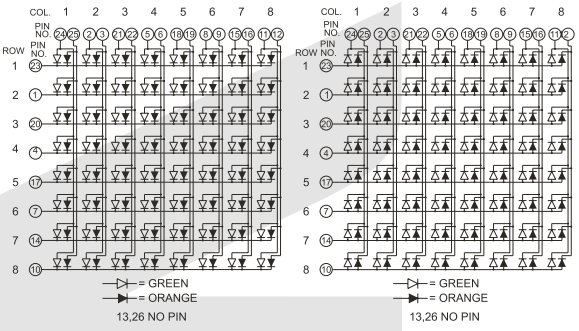

LED DOT MATRIX DISPLAY Series

KLS9-M LED DOT MATRIX DISPLAY Series

PACKAGE DIMENSION	INTERNAL CIRCUIT DIAGRAM
KLS9M-19881 Series	KLS9M-19881BRGB (KLS9M-19881ARGB C.C.)
KLS9M-23881 Series	KLS9M-23881Ax KLS9M-23881Bx
KLS9M-23881 Series	KLS9M-23881Cx KLS9M-23881Dx

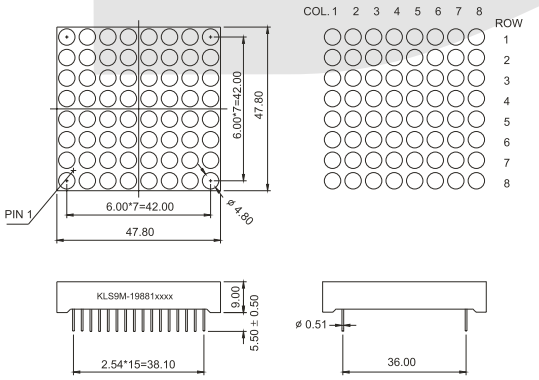

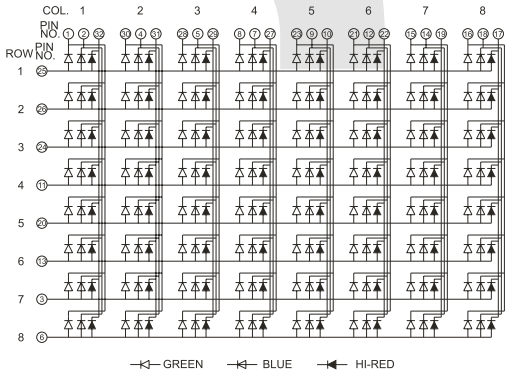

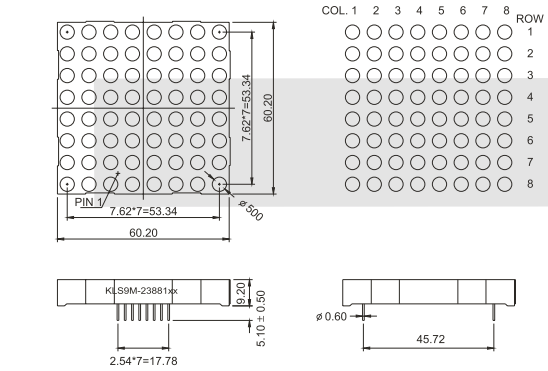

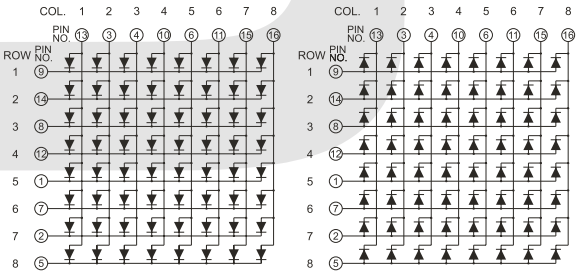

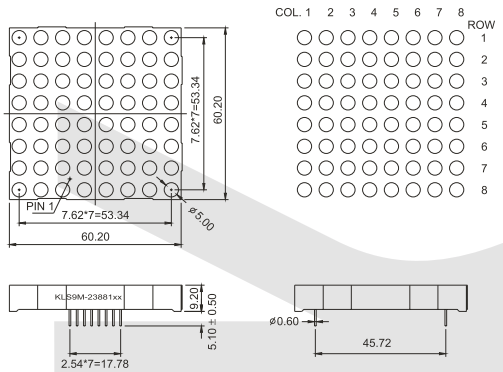

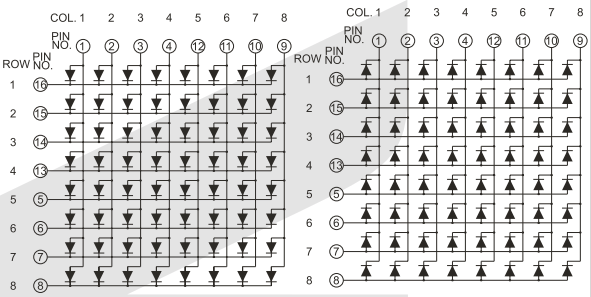

LED DOT MATRIX DISPLAY Series

KLS9-M LED DOT MATRIX DISPLAY Series

PACKAGE DIMENSION	INTERNAL CIRCUIT DIAGRAM
KLS9M-23881 Series	KLS9M-23881AEG KLS9M-23881BEG
KLS9M-23881 Series	KLS9M-23881AEG-S KLS9M-23881BEG-S
KLS9M-23881 Series	KLS9M-23881CEG KLS9M-23881DEG

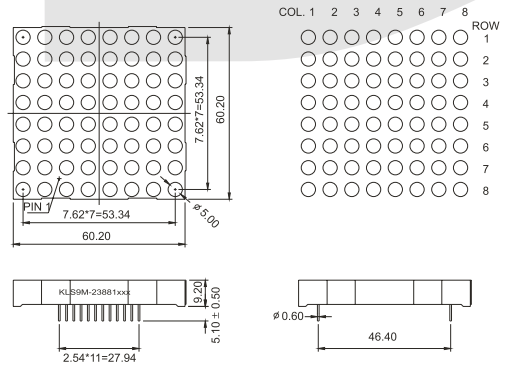

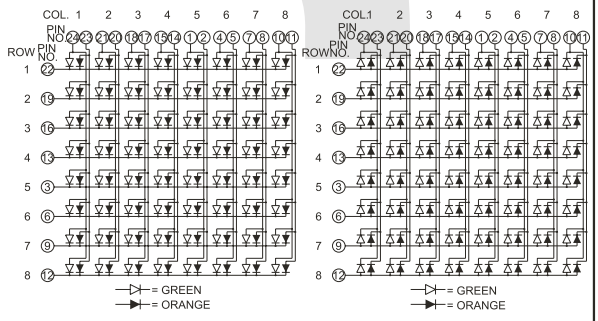

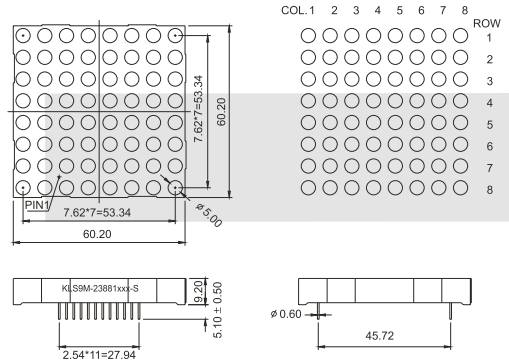

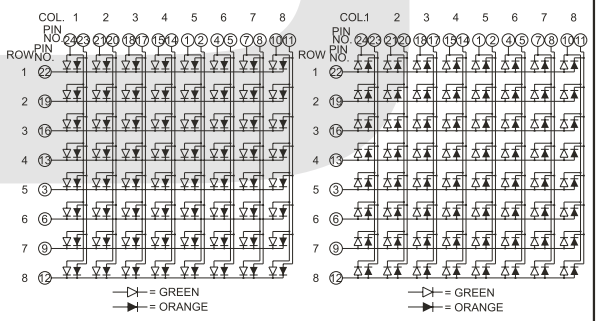

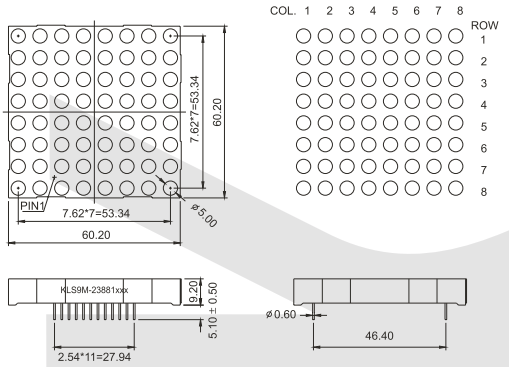

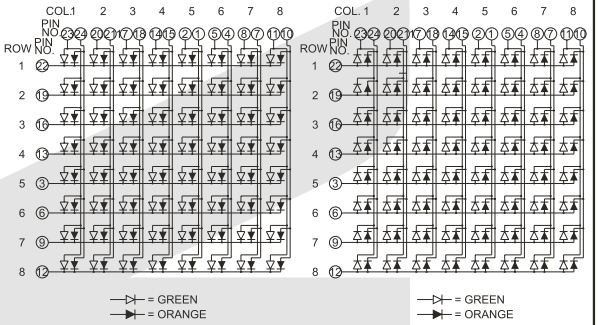

LED DOT MATRIX DISPLAY Series

KLS9-M LED DOT MATRIX DISPLAY Series

PACKAGE DIMENSION	INTERNAL CIRCUIT DIAGRAM
KLS9M-23881 Series	KLS9M-23881BRGB (KLS9M-23881ARGB C.C.)
KLS9M-23881 Series	KLS9M-23881DRGB (KLS9M-23881CRGB C.C.)
KLS9M-23881 Series	KLS9M-23881FRGB (KLS9M-23881ERGB C.C.)

LED DOT MATRIX DISPLAY Series

KLS9-M LED DOT MATRIX DISPLAY Series

KLS9 - M - 23 8 8 1 A EG - 1 1- XXX

1 2 3 4 5 6 7 8 9 10 11

1. Brank: KLS ELECTRONIC
2. Digit Mode: M-Dot Matrix ML-La mp Dot Matrix
3. Mode Number:
4. Column Number:
5. Row Number:
6. Model Number:
7. Drive Mode: A. C. E. ..... - Common Cathode B. D. F. ..... - Common Anode Z-Universal
8. Color Code:

H: Red	GaP/GaP		700nm	UG: High Bright Green	AlGaInP		574nm
S: High Bright Red	GaAlAs/GaAs	SH	660nm	PG: Super Pure Green	AlGaInP		525nm
D: Super Bright Red	GaAlAs/GaAs	DH	660nm	BG: Super Bluish Green	AlGaInP		505nm
UR: Ultra Bright Red	GaAlAs/GaAlAs	DDH	660nm	B: Blue GaN/SiC			430nm
UHR: Ultra Bright Red	AlGaInP		640nm	UB: Super Bright Blue	InGaN/SiC		470nm
E: Orange	GaAsP/GaP		635nm	V: UV	InGaN/SiC		405nm
UE: High Bright Orange	AlGaInP		630nm	W: White			
Y: Yellow	GaAsP/GaP		585nm	EG: Orange+Green Bi-Color			
UY: High Bright Yellow	AlGaInP		590nm	SG: High Red+Green Bi-Color			
G: Green	GaP/GaP		568nm	RGB: Multicolor			

9. Reflector Surface Color: 0-White Surface 1-Black Surface 2-Gray Surface 3-Red Surface
10. Segment Epoxy Color: 0-Water Clear 1-White Diffused 2-Red Diffused
    3-Green Diffused 4-Yellow Diffused
11. Special Device: -Lxx: Pin Length -B: Both Side Decimal Point -N: No Decimal Point

LED DOT MATRIX DISPLAY Series

KLS9-M LED DOT MATRIX DISPLAY Series

PACKAGE DIMENSION	INTERNAL CIRCUIT DIAGRAM
KLS9M-12573 Series	KLS9M-12573Ax KLS9M-12573Bx
KLS9M-12591 Series	KLS9M-12591Ax KLS9M-12591Bx
KLS9ML-23882 Series	KLS9ML-23882Ax KLS9ML-23882Bx

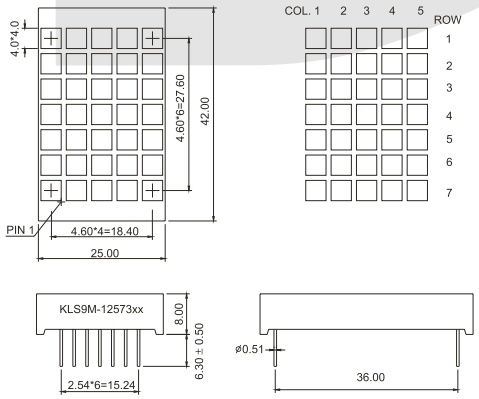

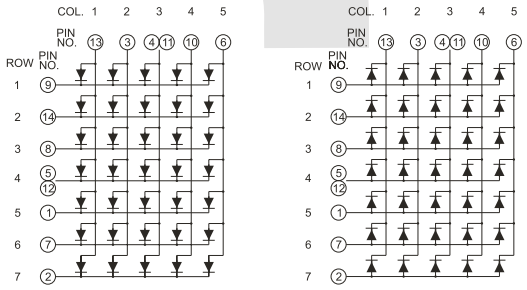

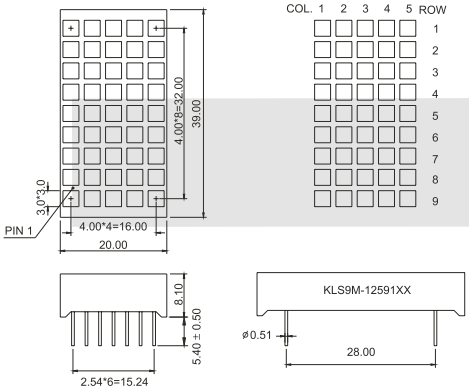

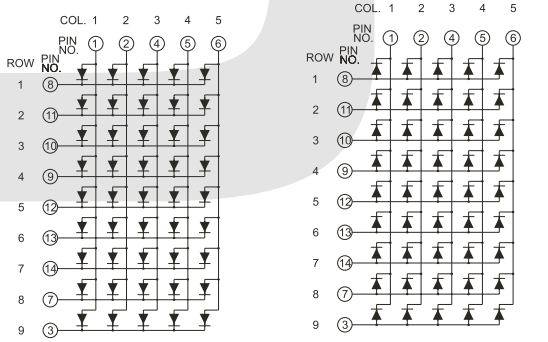

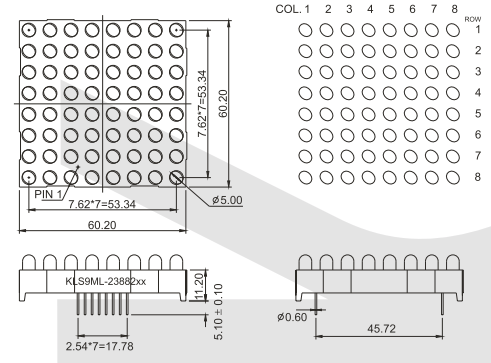

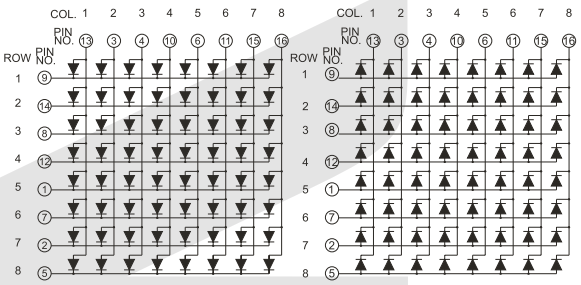

LED DOT MATRIX DISPLAY Series

KLS9-M LED DOT MATRIX DISPLAY Series

PACKAGE DIMENSION

KLS9M-12883 Series

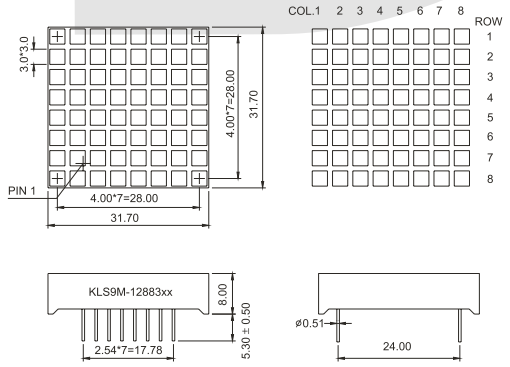

KLS9M-12883 Series

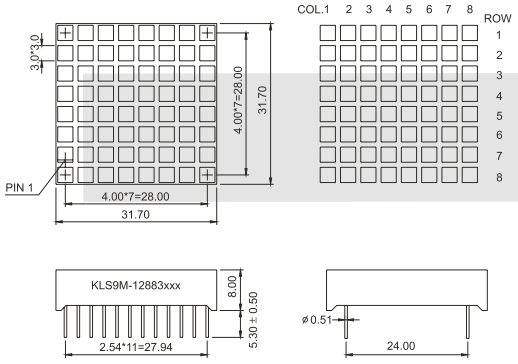

KLS9M-15FF1 Series

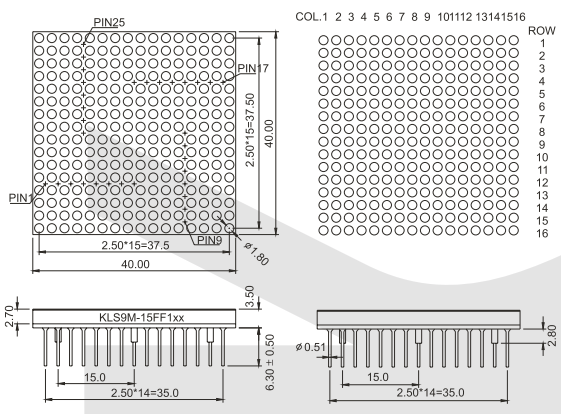

INTERNAL CIRCUIT DIAGRAM

KLS9M-12883Ax

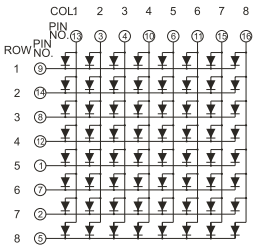

KLS9M-12883Bx

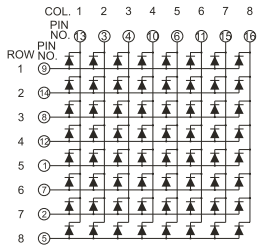

KLS9M-12883AEG

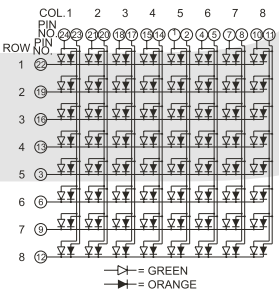

KLS9M-12883BEG

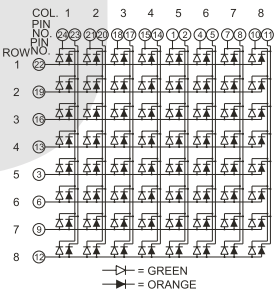

KLS9M-15FF1Bx (KLS9M-15FF1Ax C.C.)

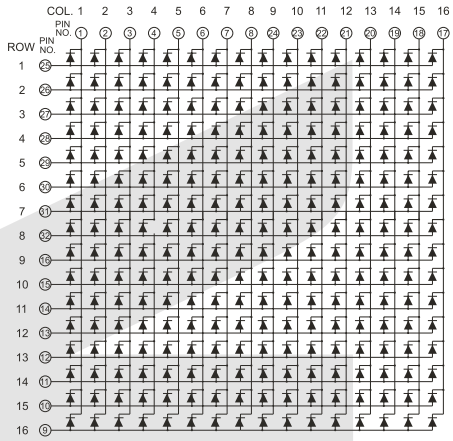

LED LIGHT BAR Series

KLS9-A LED LIGHT BAR Series

KLS9 - A - R 10 25 10 Z S - 1 1-XXX
1 2 3 4 5 6 7 8 9 10 11

1. Brank: KLS ELECTRONIC
2. Digit Mode: A-Light Bar
3. Display Area Shape: R-Rectangular S-Square C-Circle T-Other
4. Display Area Number:
5. Reflector Length:
6. Reflector Width:
7. Drive Mode: A. C. E. ..... - Common Cathode B. D. F. ..... - Common Anode Z-Universal
8. Color Code:

H: Red	GaP/GaP		700nm	UG: High Bright Green	AlGaInP		574nm
S: High Bright Red	GaAlAs/GaAs	SH	660nm	PG: Super Pure Green	AlGaInP		525nm
D: Super Bright Red	GaAlAs/GaAs	DH	660nm	BG: Super Bluish Green	AlGaInP		505nm
UR: Ultra Bright Red	GaAlAs/GaAlAs	DDH	660nm	B: Blue GaN/SiC			430nm
UHR: Ultra Bright Red	AlGaInP		640nm	UB: Super Bright Blue	InGaN/SiC		470nm
E: Orange	GaAsP/GaP		635nm	V: UV	InGaN/SiC		405nm
UE: High Bright Orange	AlGaInP		630nm	W: White			
Y: Yellow	GaAsP/GaP		585nm	EG: Orange+Green Bi-Color			
UY: High Bright Yellow	AlGaInP		590nm	SG: High Red+Green Bi-Color			
G: Green	GaP/GaP		568nm	RGB: Multicolor			

9. Reflector Surface Color: 0-White Surface 1-Black Surface 2-Gray Surface 3-Red Surface
10. Segment Epoxy Color: 0-Water Clear 1-White Diffused 2-Red Diffused
    3-Green Diffused 4-Yellow Diffused
11. Special Device: -Lxx: Pin Length -B: Both Side Decimal Point -N: No Decimal Point

LED LIGHT BAR Series

KLS9-A LED LIGHT BAR Series

IX

PACKAGE DIMENSION

KLS9A-R102510 Series

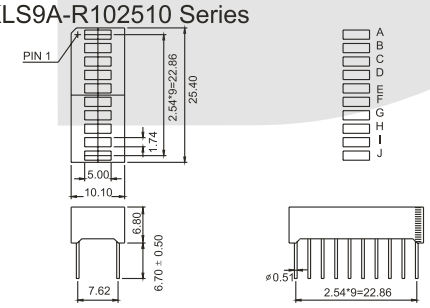

KLS9A-R1025101 Series

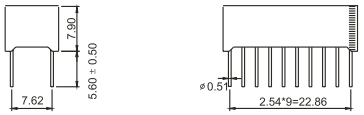

KLS9A-R102510 Series

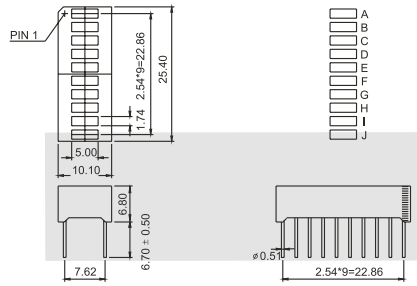

KLS9A-R1025101 Series

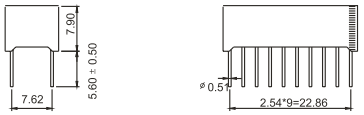

KLS9A-R123010 Series

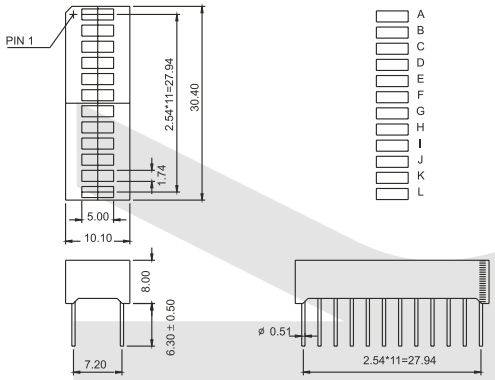

INTERNAL CIRCUIT DIAGRAM

KLS9A-R102510Zx/R1025101Zx

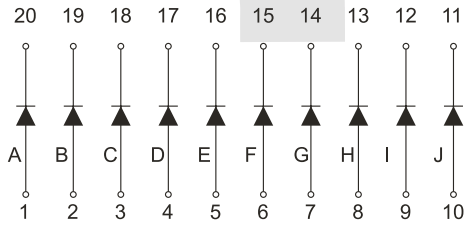

KLS9A-R102510BEG/R1025101BEG

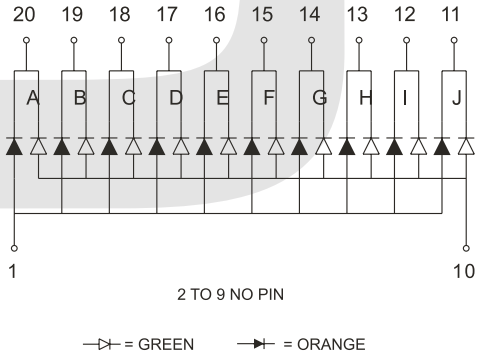

KLS9A-R123010Zx

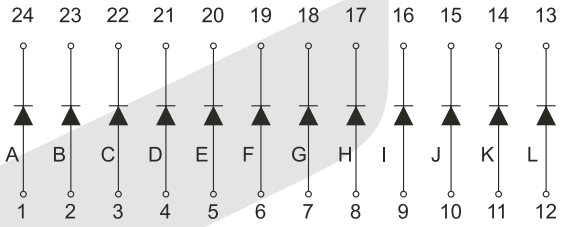

LED LIGHT BAR Series

KLS9-A LED LIGHT BAR Series

IX

PACKAGE DIMENSION	INTERNAL CIRCUIT DIAGRAM
KLS9A-R123010 Series	KLS9A-R123010BEG
KLS9A-R1006 Series	KLS9A-R1006Zx
KLS9A-R1206 Series	KLS9A-R1206Zx2

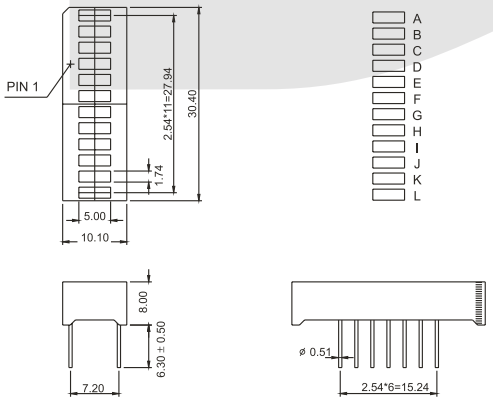

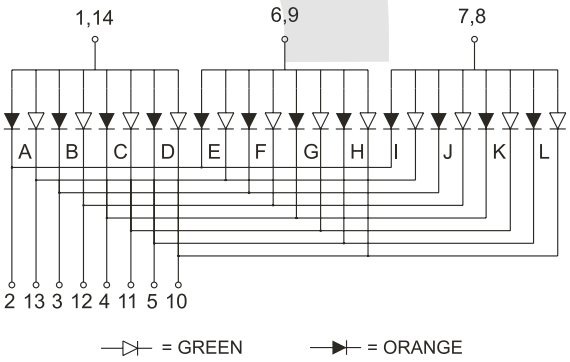

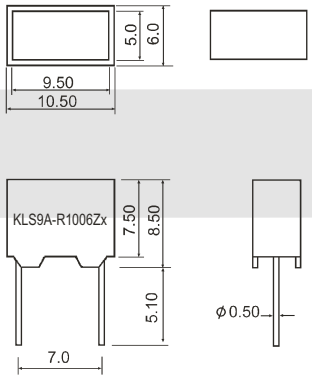



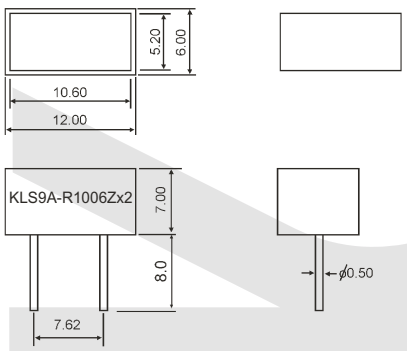



LED LIGHT BAR Series

KLS9-A LED LIGHT BAR Series

IX

PACKAGE DIMENSION	INTERNAL CIRCUIT DIAGRAM
KLS9A-R1308 Series 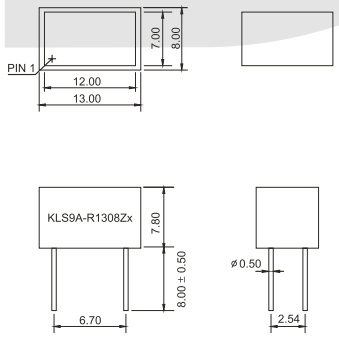	KLS9A-R1308ZX 
KLS9A-R1408 Series 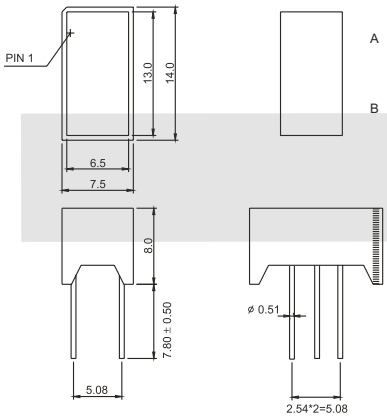	KLS9A-R1408Zx 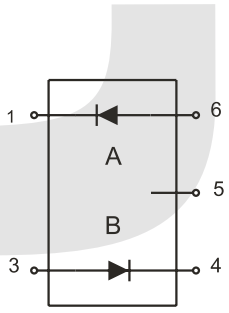 2 NO PIN 5 NO CONNECT
KLS9A-R1715 Series 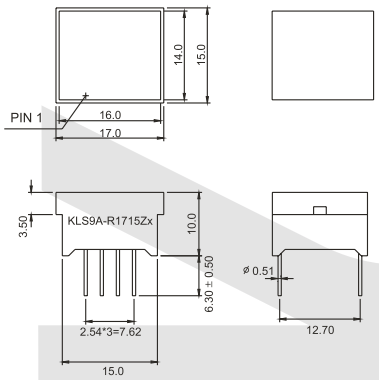	KLS9A-R1715Zx 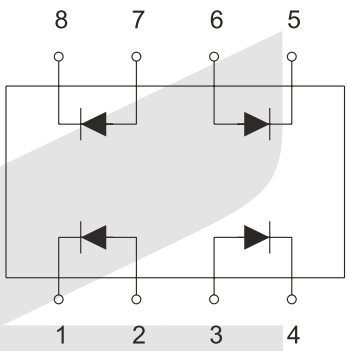

LED LIGHT BAR Series

KLS9-A LED LIGHT BAR Series

PACKAGE DIMENSION	INTERNAL CIRCUIT DIAGRAM
KLS9A-R3219 Series	KLS9A-R3219Zx
KLS9A-R3222 Series	KLS9A-R3222Zx
KLS9A-S10 Series	KLS9A-S10Zx

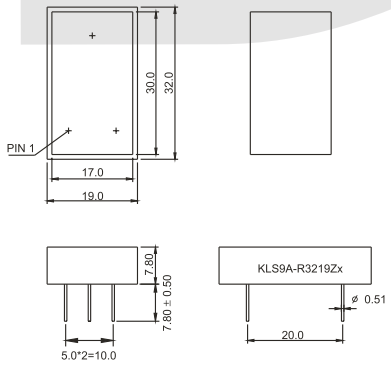

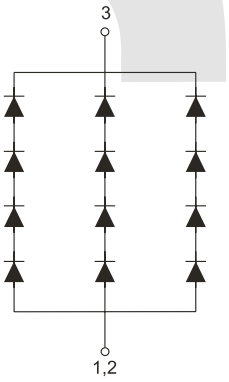

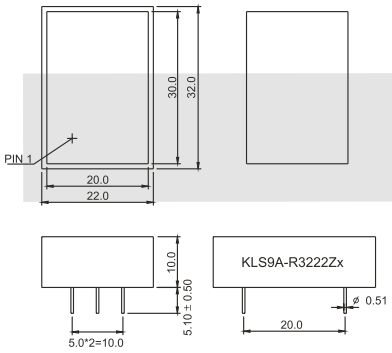

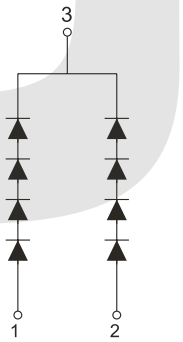

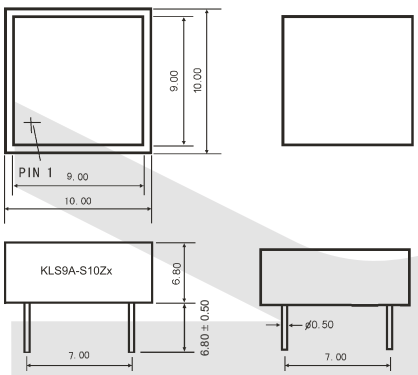



LED LIGHT BAR Series

KLS9-A LED LIGHT BAR Series

PACKAGE DIMENSION	INTERNAL CIRCUIT DIAGRAM
KLS9A-S15 Series 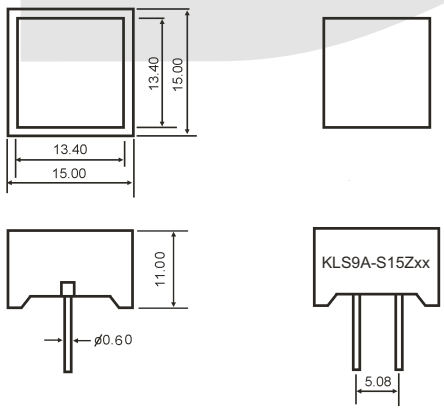	KLS9A-S15ZX2 KLS9A-S15ZX4 KLS9A-S15ZX4-A 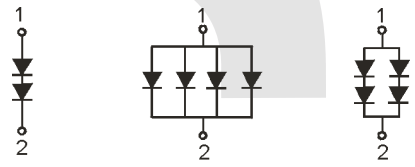 KLS9A-S15ZEG KLS9A-S15ZX4-B 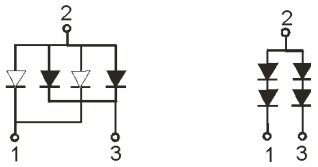
KLS9A-C18 Series 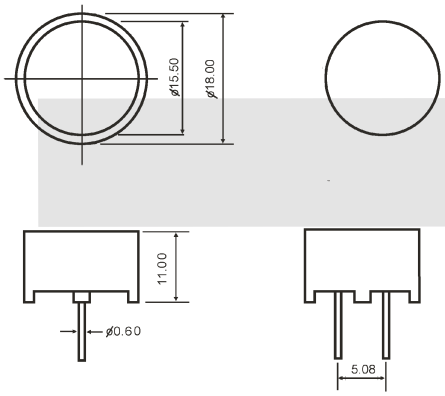	KLS9A-C18ZX2 KLS9A-C18ZX4 KLS9A-C18ZX4-A 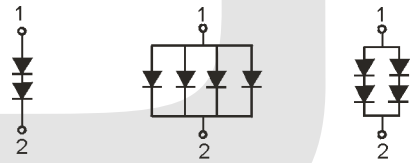 KLS9A-C18ZEG KLS9A-C18ZX4-B 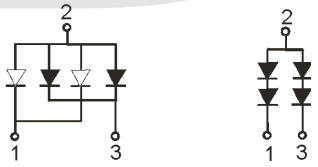
KLS9A-R053007 Series 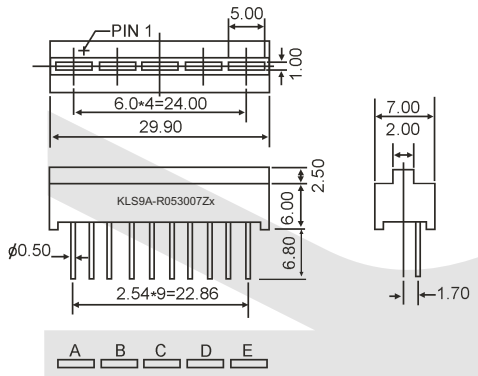	KLS9A-R053007Zx 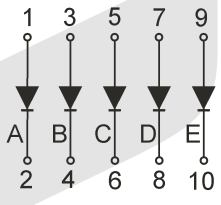

LED Light Bar Series

Rectangular Light Bar

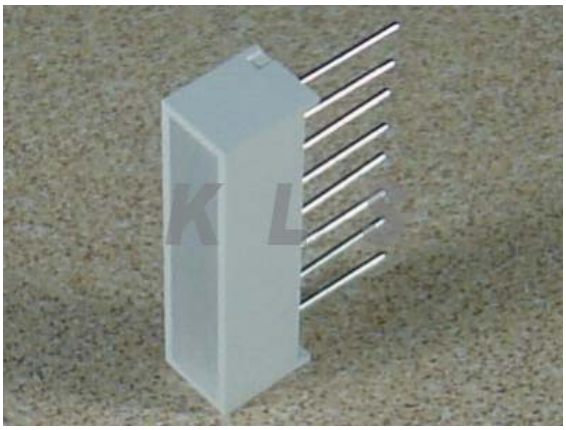

Part No.	Emitting color	λP(nm) @20mA	VF (V) @20mA		IV(μcd) @10mA
		Typ.	Typ.	Max.	Typ.
KLS9-A-R1006	GaAlAs/GaAs Hi-Red	660	1.85	2.20	3500

KLS9 A - R 10 25 10 Z S - 1 1 - XXX

1 2 3 4 5 6 7 8 9 10 11

1 Brand:KLS ELECTRONIC

2 Digit Mode: A-Light Bar

3 Display Area Shape: R-Rectangular S-Square C-Circle T-Other

4 Display Area Number:

5 Reflector Length:

6 Reflector Width:

7 Drive Mode: See Part 1. 6

8 Color Code: See Part 1. 7

9 Reflector Surface Color: See Part 1. 8

10 Segment Epoxy Color: See Part 1. 9

11 Special Device: See Part 1. 10

ORDER INFORMATION

PACKAGE DIMENSION

KLS9A-R123010 Series

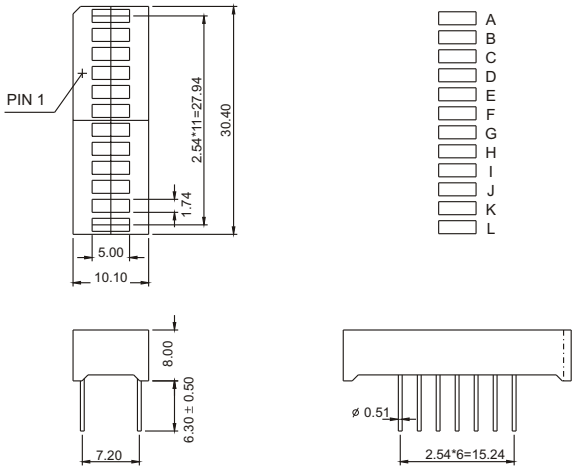

KLS9A-R1006 Series

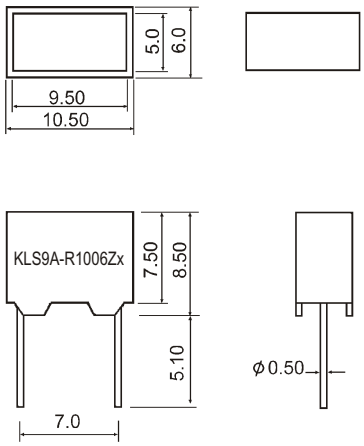

KLS9A-R1206 Series

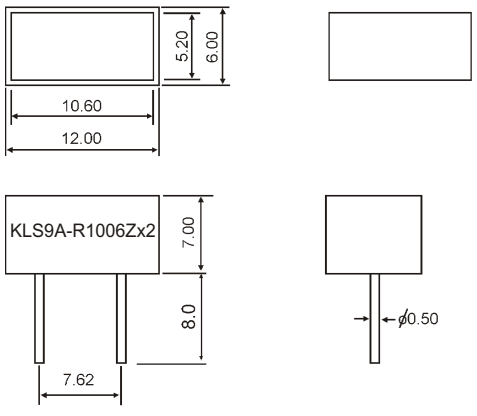

INTERNAL CIRCUIT DIAGRAM

KLS9A-R123010BEG

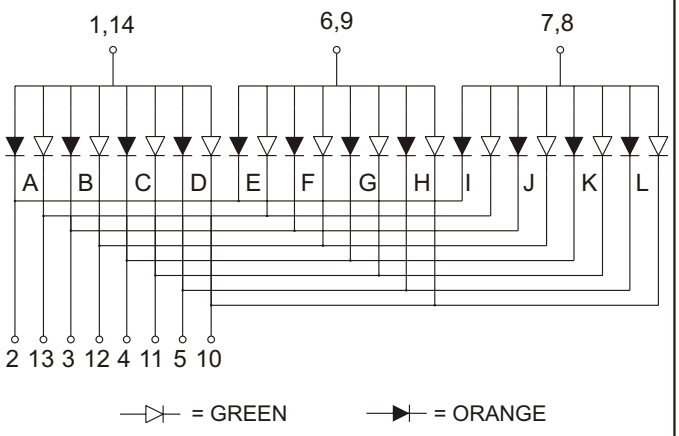

KLS9A-R1006Zx



KLS9A-R1206Zx2



Electrical-Optical Characteristics (Ta=25℃)

PARAMETER	SYMBOL	DEVICES	CODE	TYP	MAX	UNIT	TEST CONDITIONS
Forward Voltage	V_F	RED	H	2.25	2.60	V	I_F=20mA
		HI-RED	S	1.85	2.20		
		SUPER-RED	D	1.85	2.20		
		ORANGE	E	2.10	2.50		
		GREEN	G	2.20	2.50		
		YELLOW	Y	2.10	2.50		
Peak Emission Wavelength	λ p	RED	H	700		nm	I_F=20mA
		HI-RED	S	660			
		SUPER-RED	D	660			
		ORANGE	E	635			
		GREEN	G	568			
		YELLOW	Y	585			
Spectral Line Half-Width	Δλ	RED	H	90		nm	I_F=20mA
		HI-RED	S	20			
		SUPER-RED	D	20			
		ORANGE	E	35			
		GREEN	G	30			
		YELLOW	Y	35			
Reverse Current	I_R	RED	H		20	μ A	V_R =5V
		HI-RED	S				
		SUPER-RED	D				
		ORANGE	E				
		GREEN	G				
		YELLOW	Y				
Average Luminous Intensity	I_V	RED	H	500		μ cd	I_F=10mA
		HI-RED	S	3500			
		SUPER-RED	D	6000			
		ORANGE	E	2500			
		GREEN	G	2500			
		YELLOW	Y	2000			
Segment-to-Segment Luminous Intensity Ratio	I_V-M		ALL MODELS		1.5:1		I_F =20mA

Absolute Maximum Rating(Ta=25℃)

PARAMETER		RED (Gap)	Hi-RED (GaAlAs/GaAs)	SUPER-RED (GaAlAs/GaAs)	ORANGE (GaAsP/Gap)	GREEN (Gap)	YELLOW (GaAsP/Gap)	UNIT
Reverse voltage	V_R	5	5	5	5	5	5	V
Forward current	I_F	15	25	25	30	30	30	mA
Peak forward current	I_{FP}	50	150	150	150	150	150	mA
Power dissipation	P_D	40	60	60	80	80	80	mW
Operating temperature	T_{OPR}	-40∽+80	-40∽+80	-40∽+80	-40∽+80	-40∽+80	-40∽+80	
Storage temperature	T_{STG}	-40∽+85	-40∽+85	-40∽+85	-40∽+85	-40∽+85	-40∽+85	
Lead soldering temperature		1.60mm from body-maximum 3 second for 260±5						

Remark: Duty cycle: 1:10, Pluse width: 0.1ms

Typical Electrical-Optical Characteristics Curves

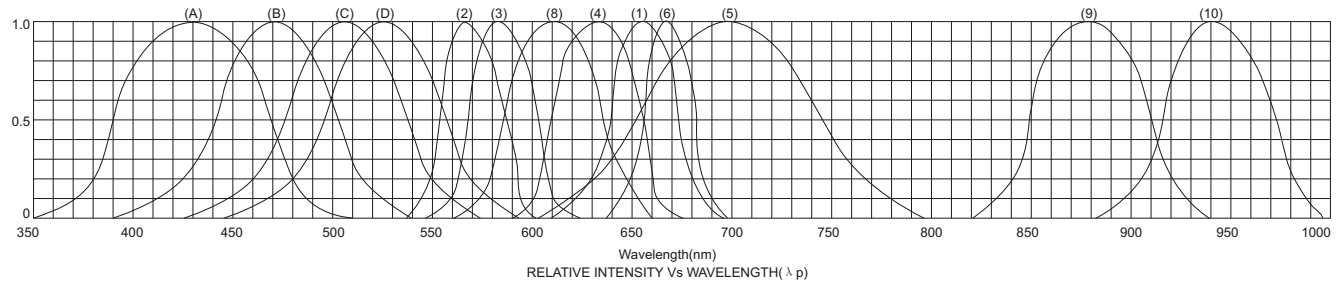

RELATIVE INTENSITY Vs WAVELENGTH(λ p)

(1) - GaAsP/GaAs 655nm/Red
(2) - GaP 568nm/Yellow Green
(3) - GaAsP/GaP 585nm/Yellow
(4) - GaAsP/GaP 635nm/Orange & Hi-Eff Red
(5) - GaP 700nm/Bright Red
(6) - GaAlAs/GaAs 660nm/Super Red
(8) - GaAsP/GaP 610nm/Super Red
(9) - GaAlAs 880nm
(10) - GaAs/GaAs & GaAlAs/GaAs 940nm
(A) - GaN/SiC 430nm/Blue
(B) - InGaN/SiC 470nm/Blue
(C) - InGaN/SiC 505nm/Super Pure Green
(D) - InGaN/SiC 525nm/Super Bluish Green

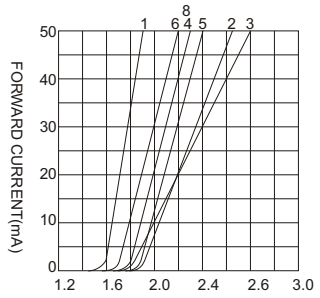

FORWARD VOLTAGE (Vf)
FORWARD CURRENT VS.
FORWARD VOLTAGE

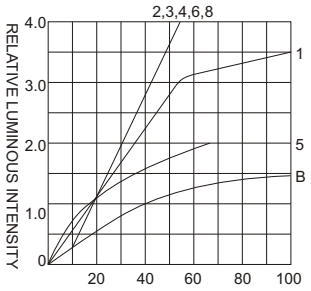

FORWARD CURRENT (mA)
RELATIVE LUMINOUS
INTENSITY VS. FORWARD
CURRENT

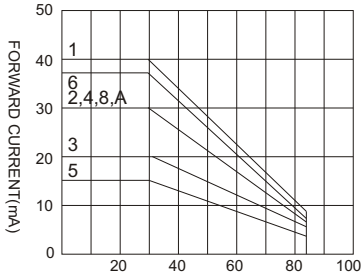

AMBIENT TEMPERATURE Ta(℃)
FORWARD CURRENT VS. AMBIENT
TEMPERATURE

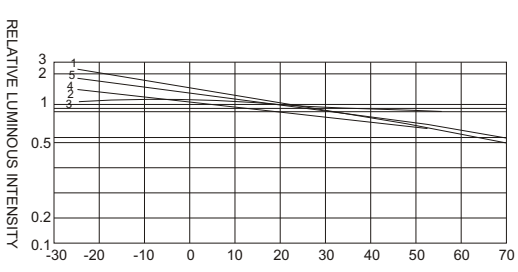

AMBIENT TEMPERATURE Ta(℃)

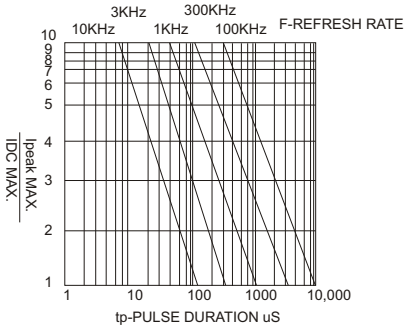

tp-PULSE DURATION uS
(1,2,3,4,6,8,B.D)

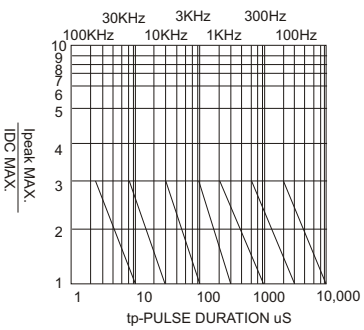

tp-PULSE DURATION uS
(5)

NOTE:25℃ free air temperature unless otherwise specified

LED Light Bar Series

Rectangular Light Bar

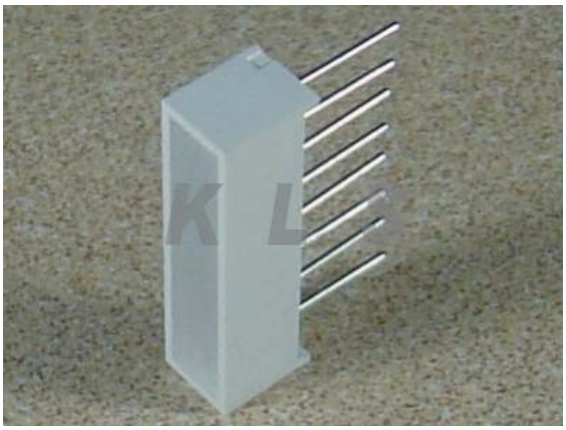

Part No.	Emitting color	λP(nm) @20mA	VF (V) @20mA		IV(μcd) @10mA
		Typ.	Typ.	Max.	Typ.
KLS9-A-R1408	GaAlAs/GaAs Super-Red	660	1.85	2.20	6000
KLS9-A-R1715	GaP Green	570	2.20	2.50	2500

KLS9 A - R 10 25 10 Z S - 1 1 - XXX
1 2 3 4 5 6 7 8 9 10 11

1 Brand:KLS ELECTRONIC
2 Digit Mode: A-Light Bar
3 Display Area Shape: R-Rectangular S-Square C-Circle T-Other
4 Display Area Number:
5 Reflector Length:
6 Reflector Width:
7 Drive Mode: See Part 1. 6
8 Color Code: See Part 1. 7
9 Reflector Surface Color: See Part 1. 8
10 Segment Epoxy Color: See Part 1. 9
11 Special Device: See Part 1. 10

ORDER INFORMATION

PACKAGE DIMENSION

KLS9A-R1308 Series

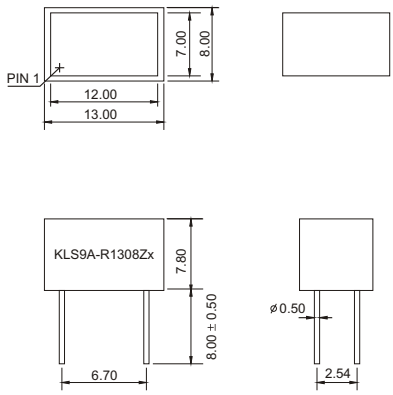

KLS9A-R1408 Series

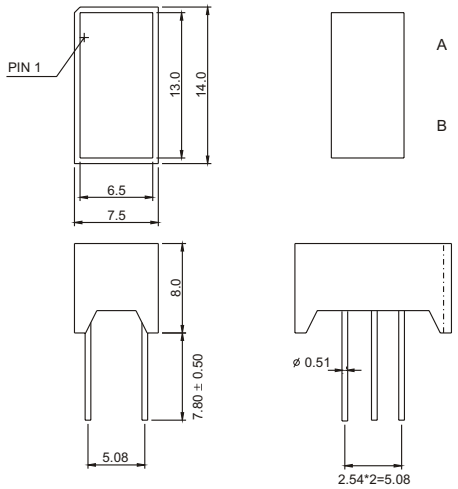

KLS9A-R1715 Series

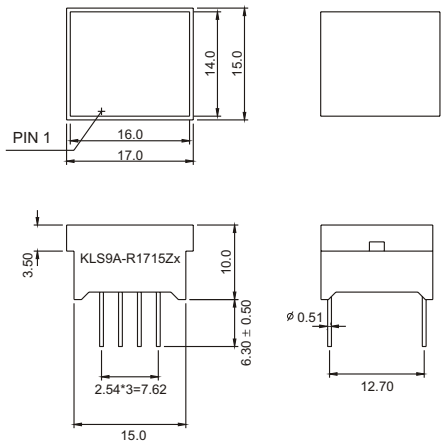

INTERNAL CIRCUIT DIAGRAM

KLS9A-R1308ZX



KLS9A-R1408Zx

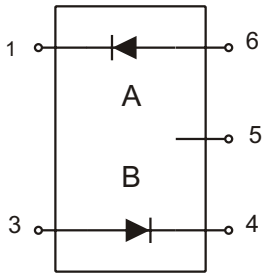

2 NO PIN 5 NO CONNECT

KLS9A-R1715Zx

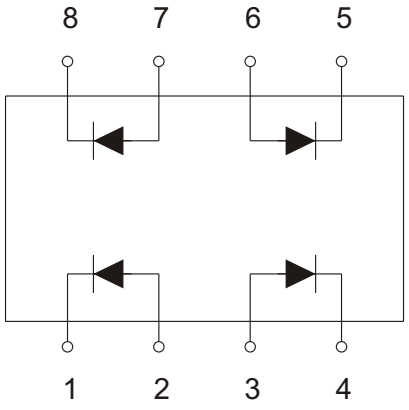

Electrical-Optical Characteristics (Ta=25℃)

PARAMETER	SYMBOL	DEVICES	CODE	TYP	MAX	UNIT	TEST CONDITIONS
Forward Voltage	V_F	RED	H	2.25	2.60	V	I_F=20mA
		HI-RED	S	1.85	2.20		
		SUPER-RED	D	1.85	2.20		
		ORANGE	E	2.10	2.50		
		GREEN	G	2.20	2.50		
		YELLOW	Y	2.10	2.50		
Peak Emission Wavelength	λ p	RED	H	700		nm	I_F=20mA
		HI-RED	S	660			
		SUPER-RED	D	660			
		ORANGE	E	635			
		GREEN	G	568			
		YELLOW	Y	585			
Spectral Line Half-Width	Δλ	RED	H	90		nm	I_F=20mA
		HI-RED	S	20			
		SUPER-RED	D	20			
		ORANGE	E	35			
		GREEN	G	30			
		YELLOW	Y	35			
Reverse Current	I_R	RED	H		20	μ A	V_R =5V
		HI-RED	S				
		SUPER-RED	D				
		ORANGE	E				
		GREEN	G				
		YELLOW	Y				
Average Luminous Intensity	I_V	RED	H	500		μ cd	I_F=10mA
		HI-RED	S	3500			
		SUPER-RED	D	6000			
		ORANGE	E	2500			
		GREEN	G	2500			
		YELLOW	Y	2000			
Segment-to-Segment Luminous Intensity Ratio	I_V-M		ALL MODELS		1.5:1		I_F =20mA

Absolute Maximum Rating(Ta=25℃)

PARAMETER		RED (Gap)	Hi-RED (GaAlAs/GaAs)	SUPER-RED (GaAlAs/GaAs)	ORANGE (GaAsP/Gap)	GREEN (Gap)	YELLOW (GaAsP/Gap)	UNIT
Reverse voltage	V_R	5	5	5	5	5	5	V
Forward current	I_F	15	25	25	30	30	30	mA
Peak forward current	I_{FP}	50	150	150	150	150	150	mA
Power dissipation	P_D	40	60	60	80	80	80	mW
Operating temperature	T_{OPR}	-40∽+80	-40∽+80	-40∽+80	-40∽+80	-40∽+80	-40∽+80	
Storage temperature	T_{STG}	-40∽+85	-40∽+85	-40∽+85	-40∽+85	-40∽+85	-40∽+85	
Lead soldering temperature		1.60mm from body-maximum 3 second for 260±5						

Remark: Duty cycle: 1:10, Pluse width: 0.1ms

Typical Electrical-Optical Characteristics Curves

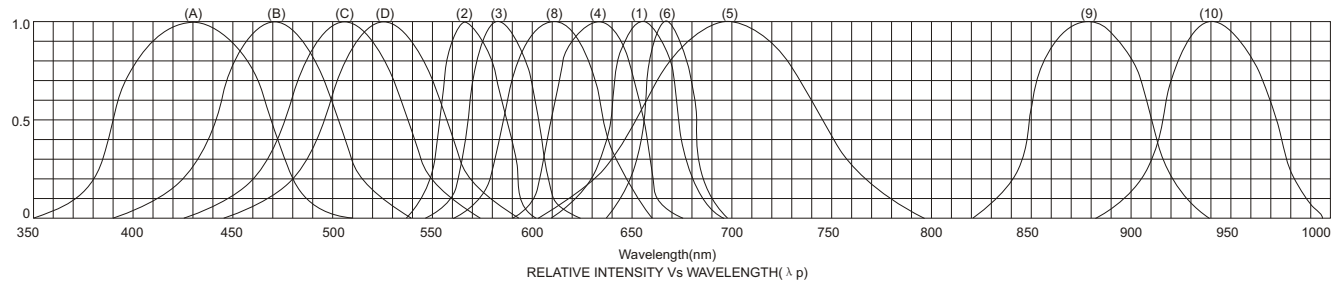

RELATIVE INTENSITY Vs WAVELENGTH(λ p)

(1) - GaAsP/GaAs 655nm/Red
(2) - GaP 568nm/Yellow Green
(3) - GaAsP/GaP 585nm/Yellow
(4) - GaAsP/GaP 635nm/Orange & Hi-Eff Red
(5) - GaP 700nm/Bright Red
(6) - GaAlAs/GaAs 660nm/Super Red
(8) - GaAsP/GaP 610nm/Super Red
(9) - GaAlAs 880nm
(10) - GaAs/GaAs & GaAlAs/GaAs 940nm
(A) - GaN/SiC 430nm/Blue
(B) - InGaN/SiC 470nm/Blue
(C) - InGaN/SiC 505nm/Super Pure Green
(D) - InGaN/SiC 525nm/Super Bluish Green

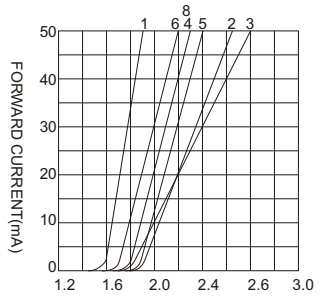

FORWARD VOLTAGE (Vf)
FORWARD CURRENT VS.
FORWARD VOLTAGE

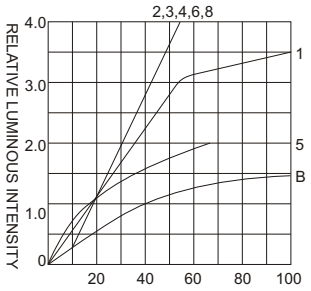

FORWARD CURRENT (mA)
RELATIVE LUMINOUS
INTENSITY VS. FORWARD
CURRENT

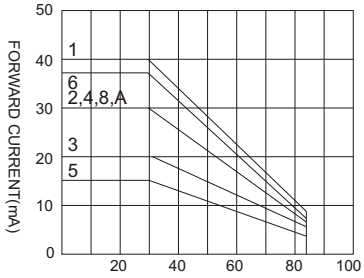

AMBIENT TEMPERATURE Ta(℃)
FORWARD CURRENT VS. AMBIENT
TEMPERATURE

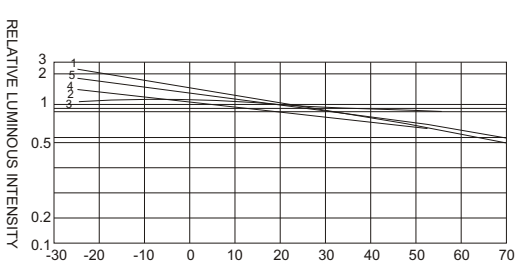

AMBIENT TEMPERATURE Ta(℃)

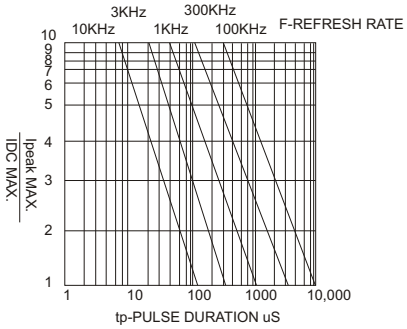

tp-PULSE DURATION uS
(1,2,3,4,6,8,B.D)

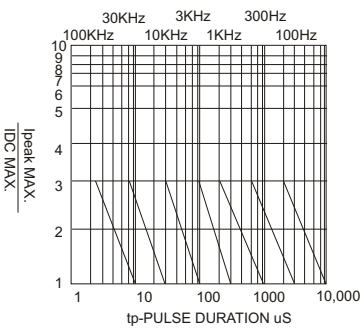

tp-PULSE DURATION uS
(5)

NOTE:25℃ free air temperature unless otherwise specified

LED Light Bar Series

Rectangular Light Bar

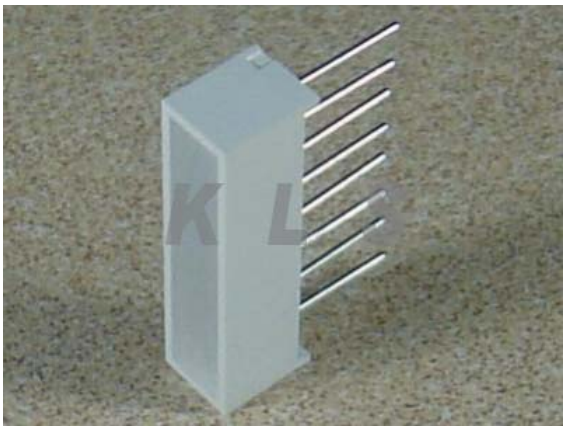

Part No.	Emitting color	λP(nm) @20mA	VF (V) @20mA		IV(μcd) @10mA
		Typ.	Typ.	Max.	Typ.
KLS9-A- R3222	GaAsP/GaP Orange	635	2.10	2.50	2500

KLS9 A - R 10 25 10 Z S - 1 1 - XXX
1 2 3 4 5 6 7 8 9 10 11

1 Brand:KLS ELECTRONIC
2 Digit Mode: A-Light Bar
3 Display Area Shape: R-Rectangular S-Square C-Circle T-Other
4 Display Area Number:
5 Reflector Length:
6 Reflector Width:
7 Drive Mode: See Part 1. 6
8 Color Code: See Part 1. 7
9 Reflector Surface Color: See Part 1. 8
10 Segment Epoxy Color: See Part 1. 9
11 Special Device: See Part 1. 10

ORDER INFORMATION

PACKAGE DIMENSION

KLS9A-R3219 Series

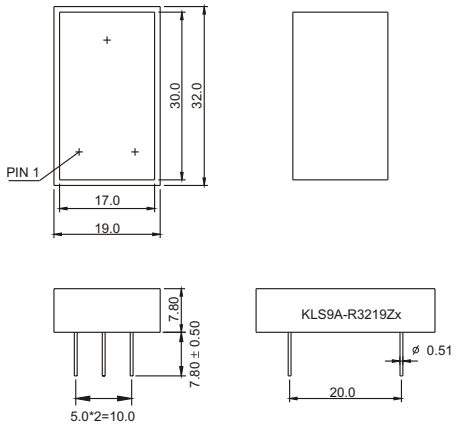

KLS9A-R3222 Series

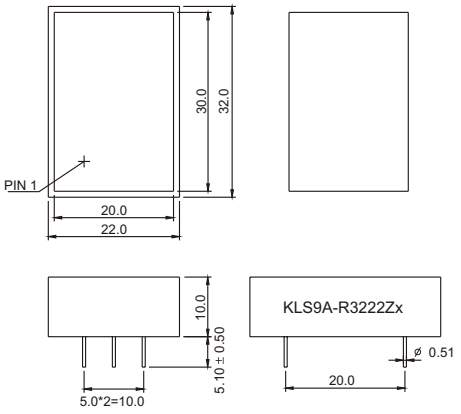

KLS9A-S10 Series

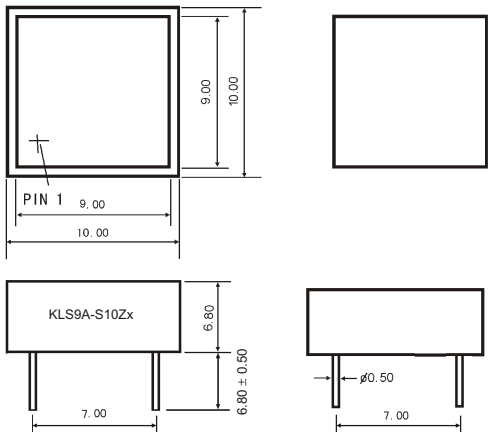

INTERNAL CIRCUIT DIAGRAM

KLS9A-R3219Zx

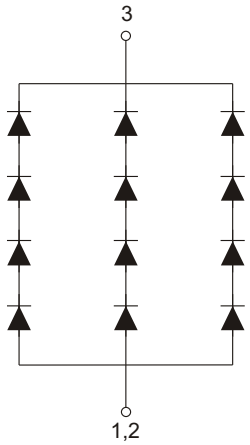

KLS9A-R3222Zx

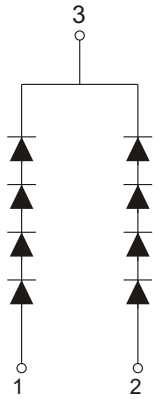

KLS9A-S10Zx

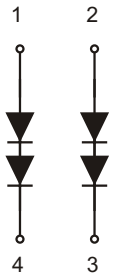

Electrical-Optical Characteristics (Ta=25℃)

PARAMETER	SYMBOL	DEVICES	CODE	TYP	MAX	UNIT	TEST CONDITIONS
Forward Voltage	V_F	RED	H	2.25	2.60	V	I_F=20mA
		HI-RED	S	1.85	2.20		
		SUPER-RED	D	1.85	2.20		
		ORANGE	E	2.10	2.50		
		GREEN	G	2.20	2.50		
		YELLOW	Y	2.10	2.50		
Peak Emission Wavelength	λ p	RED	H	700		nm	I_F=20mA
		HI-RED	S	660			
		SUPER-RED	D	660			
		ORANGE	E	635			
		GREEN	G	568			
		YELLOW	Y	585			
Spectral Line Half-Width	Δλ	RED	H	90		nm	I_F=20mA
		HI-RED	S	20			
		SUPER-RED	D	20			
		ORANGE	E	35			
		GREEN	G	30			
		YELLOW	Y	35			
Reverse Current	I_R	RED	H		20	μ A	V_R =5V
		HI-RED	S				
		SUPER-RED	D				
		ORANGE	E				
		GREEN	G				
		YELLOW	Y				
Average Luminous Intensity	I_V	RED	H	500		μ cd	I_F=10mA
		HI-RED	S	3500			
		SUPER-RED	D	6000			
		ORANGE	E	2500			
		GREEN	G	2500			
		YELLOW	Y	2000			
Segment-to-Segment Luminous Intensity Ratio	I_V-M		ALL MODELS		1.5:1		I_F =20mA

Absolute Maximum Rating(Ta=25℃)

PARAMETER		RED (Gap)	Hi-RED (GaAlAs/GaAs)	SUPER-RED (GaAlAs/GaAs)	ORANGE (GaAsP/Gap)	GREEN (Gap)	YELLOW (GaAsP/Gap)	UNIT
Reverse voltage	V_R	5	5	5	5	5	5	V
Forward current	I_F	15	25	25	30	30	30	mA
Peak forward current	I_{FP}	50	150	150	150	150	150	mA
Power dissipation	P_D	40	60	60	80	80	80	mW
Operating temperature	T_{OPR}	-40∽+80	-40∽+80	-40∽+80	-40∽+80	-40∽+80	-40∽+80	
Storage temperature	T_{STG}	-40∽+85	-40∽+85	-40∽+85	-40∽+85	-40∽+85	-40∽+85	
Lead soldering temperature		1.60mm from body-maximum 3 second for 260±5						

Remark: Duty cycle: 1:10, Pluse width: 0.1ms

Typical Electrical-Optical Characteristics Curves

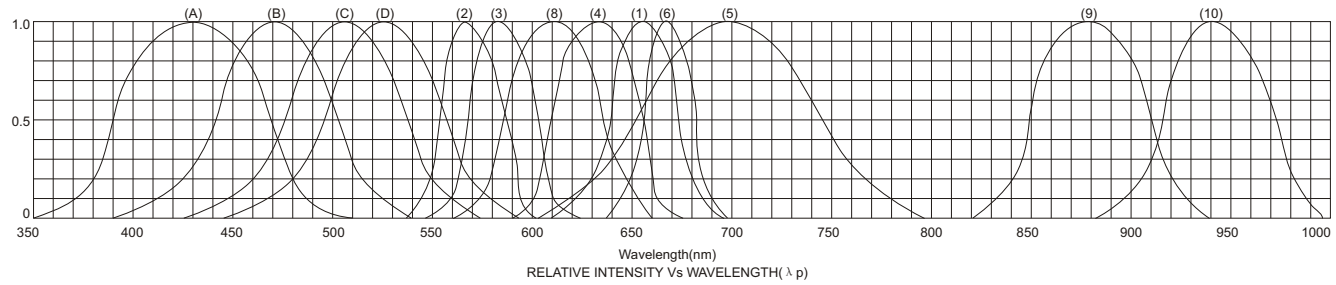

RELATIVE INTENSITY Vs WAVELENGTH(λ p)

(1) - GaAsP/GaAs 655nm/Red
(2) - GaP 568nm/Yellow Green
(3) - GaAsP/GaP 585nm/Yellow
(4) - GaAsP/GaP 635nm/Orange & Hi-Eff Red
(5) - GaP 700nm/Bright Red
(6) - GaAlAs/GaAs 660nm/Super Red
(8) - GaAsP/GaP 610nm/Super Red
(9) - GaAlAs 880nm
(10) - GaAs/GaAs & GaAlAs/GaAs 940nm
(A) - GaN/SiC 430nm/Blue
(B) - InGaN/SiC 470nm/Blue
(C) - InGaN/SiC 505nm/Super Pure Green
(D) - InGaN/SiC 525nm/Super Bluish Green

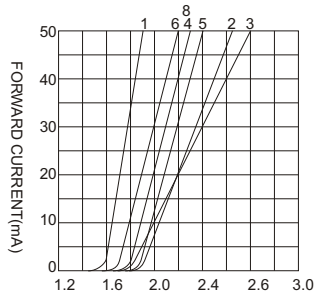

FORWARD VOLTAGE (Vf)
FORWARD CURRENT VS.
FORWARD VOLTAGE

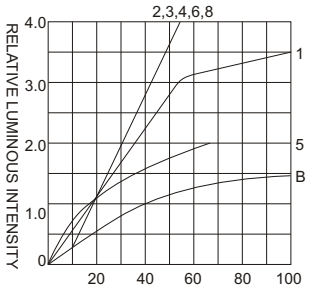

FORWARD CURRENT (mA)
RELATIVE LUMINOUS
INTENSITY VS. FORWARD
CURRENT

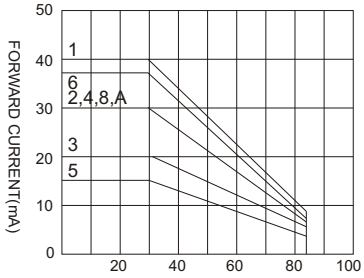

AMBIENT TEMPERATURE Ta(℃)
FORWARD CURRENT VS. AMBIENT
TEMPERATURE

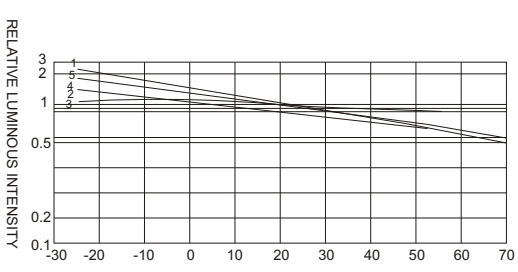

AMBIENT TEMPERATURE Ta(℃)

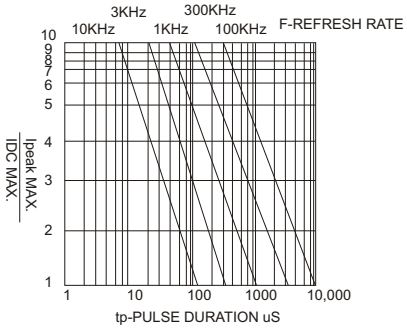

tp-PULSE DURATION uS
(1,2,3,4,6,8,B.D)

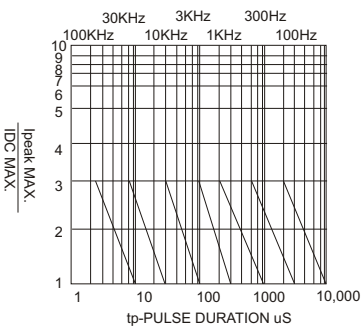

tp-PULSE DURATION uS
(5)

NOTE:25℃ free air temperature unless otherwise specified

LED Light Bar Series

Special Light Bar



24X35X9mm / 46X25.5X8mm / 30X56X11.2mm / 41X63.8X11.8mm

Part No.	Color	Material	Wavelength λd(nm)	Iv (mcd) Typ	Catalog
STANDARD BRIGHTNESS					
KLS9-A-T2435BH	Red	GaP	700nm	7	
KLS9-A-T2435BS	Hi Red	GaAlAs	660nm	49	
KLS9-A-T2435BD	Super Red	GaAlAs	660nm	84	
KLS9-A-T2435BUR	Ultra Red	GaAlAs	660nm	168	
KLS9-A-T2435BE	Orange	GaAsP	635nm	35	
KLS9-A-T2435BY	Yellow	GaAsP	585nm	28	
KLS9-A-T2435BG	Green	GaP	570nm	35	
ULTRA BRIGHTNESS					
KLS9-A-T2435BUHR	Ultra Bright Red	AlGaInP	645nm	98	
KLS9-A-T2435BUE	Ultra Orange	AlGaInP	630nm	98	
KLS9-A-T2435BYO	Ultra Amber	AlGaInP	610nm	98	
KLS9-A-T2435BUY	Ultra Yellow	AlGaInP	590nm	98	
KLS9-A-T2435BUG	Ultra Green	AlGaInP	574nm	70	
KLS9-A-T2435BPG	Ultra Pure Green	AlGaInP	525nm	70	
KLS9-A-T2435BB	Blue	InGaN	430nm	70	
KLS9-A-T2435BW	White	InGaN	-	70	

ORDER INFORMATION

LED Light Bar Series

Circle Light Bar



Part No.	Emitting color	λP(nm) @20mA	VF (V) @20mA		IV(μcd) @10mA
		Typ.	Typ.	Max.	Typ.
KLS9-A-C18ZD4	GaAlAs/GaAs Super-Red	660	1.85	2.20	6000
KLS9-A-C18ZEG	GaAsP/GaP Orange+GaP Green	635/568	2.10/2.20	2.50/2.50	2500/2500

KLS9 A - R 10 25 10 Z S - 1 1 - XXX
1 2 3 4 5 6 7 8 9 10 11

1 Brand:KLS ELECTRONIC
2 Digit Mode: A-Light Bar
3 Display Area Shape: R-Rectangular S-Square C-Circle T-Other
4 Display Area Number:
5 Reflector Length:
6 Reflector Width:
7 Drive Mode: See Part 1. 6
8 Color Code: See Part 1. 7
9 Reflector Surface Color: See Part 1. 8
10 Segment Epoxy Color: See Part 1. 9
11 Special Device: See Part 1. 10

ORDER INFORMATION

PACKAGE DIMENSION

KLS9A-S15 Series

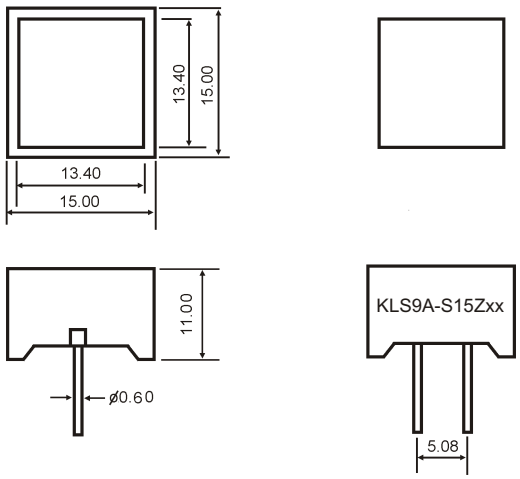

KLS9A-C18 Series

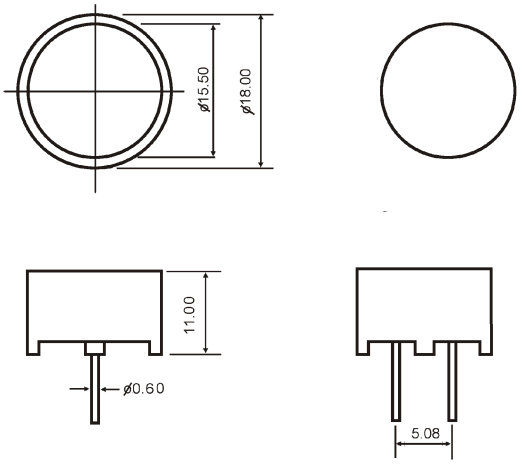

KLS9A-R053007 Series

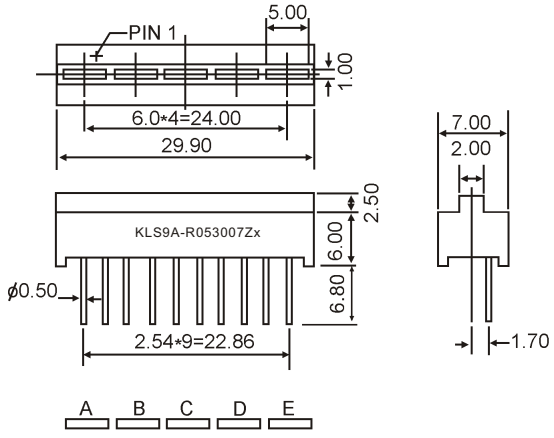

INTERNAL CIRCUIT DIAGRAM

KLS9A-S15ZX2 KLS9A-S15ZX4 KLS9A-S15ZX4-A

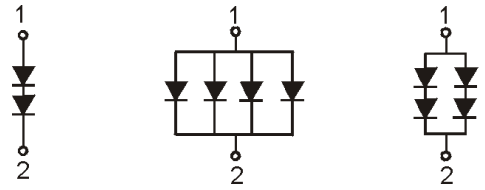

KLS9A-S15ZEG KLS9A-S15ZX4-B

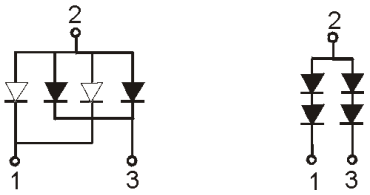

KLS9A-C18ZX2 KLS9A-C18ZX4 KLS9A-C18ZX4-A

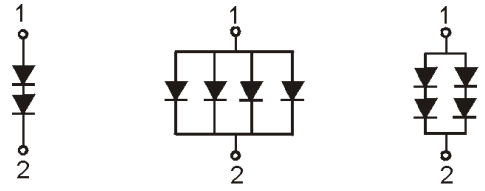

KLS9A-C18ZEG KLS9A-C18ZX4-B

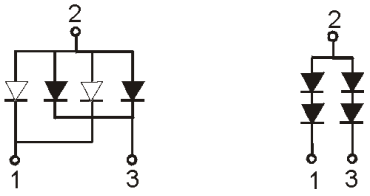

KLS9A-R053007Zx

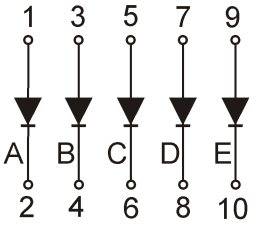

Electrical-Optical Characteristics (Ta=25℃)

PARAMETER	SYMBOL	DEVICES	CODE	TYP	MAX	UNIT	TEST CONDITIONS
Forward Voltage	V_F	RED	H	2.25	2.60	V	I_F=20mA
		HI-RED	S	1.85	2.20		
		SUPER-RED	D	1.85	2.20		
		ORANGE	E	2.10	2.50		
		GREEN	G	2.20	2.50		
		YELLOW	Y	2.10	2.50		
Peak Emission Wavelength	λ p	RED	H	700		nm	I_F=20mA
		HI-RED	S	660			
		SUPER-RED	D	660			
		ORANGE	E	635			
		GREEN	G	568			
		YELLOW	Y	585			
Spectral Line Half-Width	Δλ	RED	H	90		nm	I_F=20mA
		HI-RED	S	20			
		SUPER-RED	D	20			
		ORANGE	E	35			
		GREEN	G	30			
		YELLOW	Y	35			
Reverse Current	I_R	RED	H		20	μ A	V_R =5V
		HI-RED	S				
		SUPER-RED	D				
		ORANGE	E				
		GREEN	G				
		YELLOW	Y				
Average Luminous Intensity	I_V	RED	H	500		μ cd	I_F=10mA
		HI-RED	S	3500			
		SUPER-RED	D	6000			
		ORANGE	E	2500			
		GREEN	G	2500			
		YELLOW	Y	2000			
Segment-to-Segment Luminous Intensity Ratio	I_V-M		ALL MODELS		1.5:1		I_F =20mA

Absolute Maximum Rating(Ta=25℃)

PARAMETER		RED (Gap)	Hi-RED (GaAlAs/GaAs)	SUPER-RED (GaAlAs/GaAs)	ORANGE (GaAsP/Gap)	GREEN (Gap)	YELLOW (GaAsP/Gap)	UNIT
Reverse voltage	V_R	5	5	5	5	5	5	V
Forward current	I_F	15	25	25	30	30	30	mA
Peak forward current	I_{FP}	50	150	150	150	150	150	mA
Power dissipation	P_D	40	60	60	80	80	80	mW
Operating temperature	T_{OPR}	-40∽+80	-40∽+80	-40∽+80	-40∽+80	-40∽+80	-40∽+80	
Storage temperature	T_{STG}	-40∽+85	-40∽+85	-40∽+85	-40∽+85	-40∽+85	-40∽+85	
Lead soldering temperature		1.60mm from body-maximum 3 second for 260±5						

Remark: Duty cycle: 1:10, Pluse width: 0.1ms

Typical Electrical-Optical Characteristics Curves

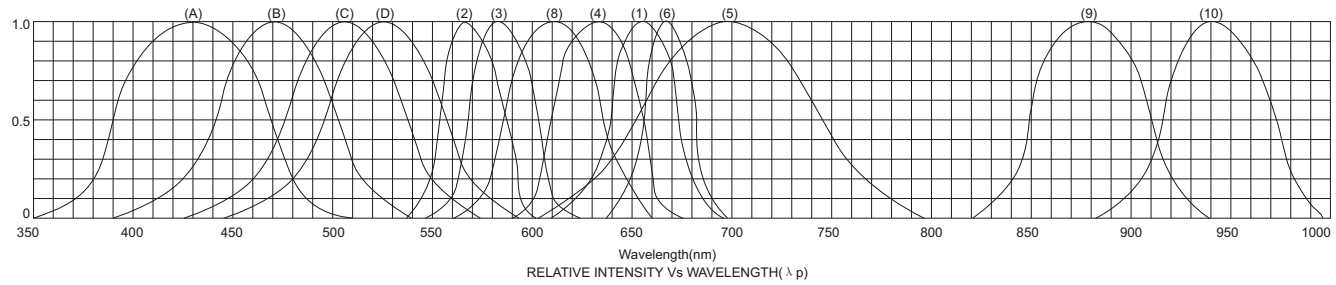

RELATIVE INTENSITY Vs WAVELENGTH(λ p)

(1) - GaAsP/GaAs 655nm/Red
(2) - GaP 568nm/Yellow Green
(3) - GaAsP/GaP 585nm/Yellow
(4) - GaAsP/GaP 635nm/Orange & Hi-Eff Red
(5) - GaP 700nm/Bright Red
(6) - GaAlAs/GaAs 660nm/Super Red
(8) - GaAsP/GaP 610nm/Super Red
(9) - GaAlAs 880nm
(10) - GaAs/GaAs & GaAlAs/GaAs 940nm
(A) - GaN/SiC 430nm/Blue
(B) - InGaN/SiC 470nm/Blue
(C) - InGaN/SiC 505nm/Super Pure Green
(D) - InGaN/SiC 525nm/Super Bluish Green

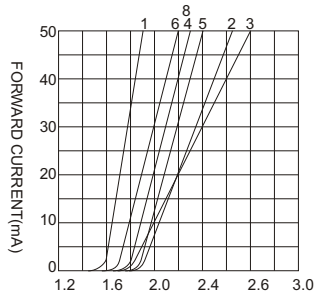

FORWARD VOLTAGE (Vf)
FORWARD CURRENT VS.
FORWARD VOLTAGE

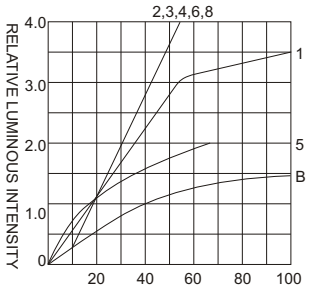

FORWARD CURRENT (mA)
RELATIVE LUMINOUS
INTENSITY VS. FORWARD
CURRENT

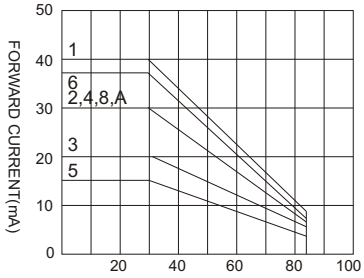

AMBIENT TEMPERATURE Ta(℃)
FORWARD CURRENT VS. AMBIENT
TEMPERATURE

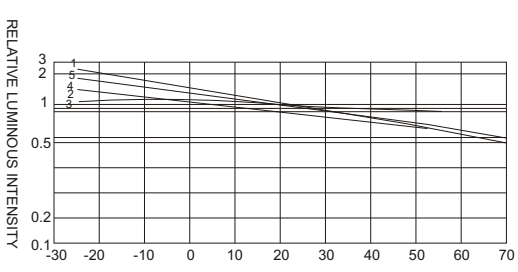

AMBIENT TEMPERATURE Ta(℃)

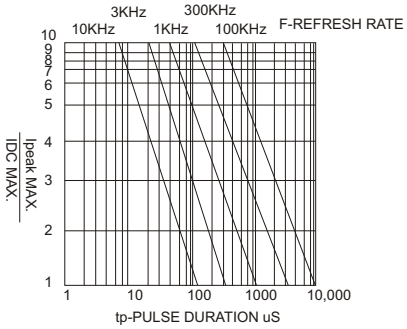

tp-PULSE DURATION uS
(1,2,3,4,6,8,B.D)

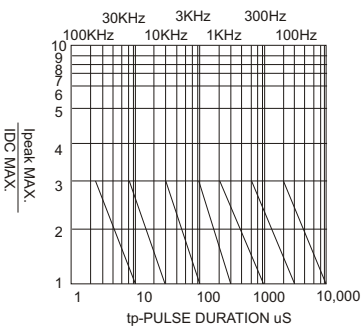

tp-PULSE DURATION uS
(5)

NOTE:25℃ free air temperature unless otherwise specified

LED Light Bar Series

Square Light Bar



Part No. □	Emitting color	λP(nm) @20mA	VF (V) @20mA		IV(μcd) @10mA
		Typ.	Typ.	Max.	Typ.
KLS9-A-S15ZS4-A	GaAlAs/GaAs Hi-Red	660	1.85	2.20	3500
KLS9-A-S15ZEG	GaAsP/GaP Orange+GaP Green	635/568	2.10/2.20	2.50/2.50	2500/2500

KLS9 A - R 10 25 10 Z S - 1 1 - XXX
1 2 3 4 5 6 7 8 9 10 11

1 Brand:KLS ELECTRONIC
2 Digit Mode: A-Light Bar
3 Display Area Shape: R-Rectangular S-Square C-Circle T-Other
4 Display Area Number:
5 Reflector Length:
6 Reflector Width:
7 Drive Mode: See Part 1. 6
8 Color Code: See Part 1. 7
9 Reflector Surface Color: See Part 1. 8
10 Segment Epoxy Color: See Part 1. 9
11 Special Device: See Part 1. 10

ORDER INFORMATION

PACKAGE DIMENSION

KLS9A-S15 Series

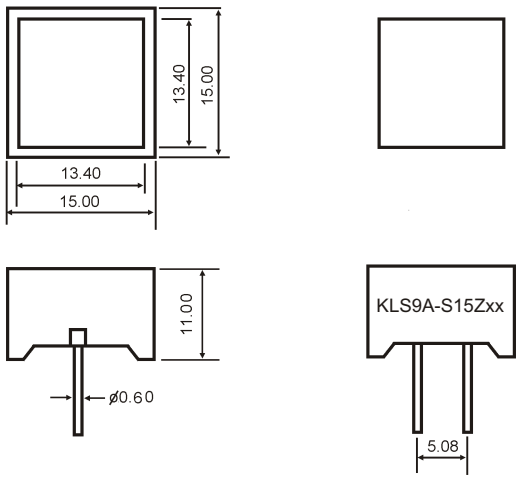

KLS9A-C18 Series

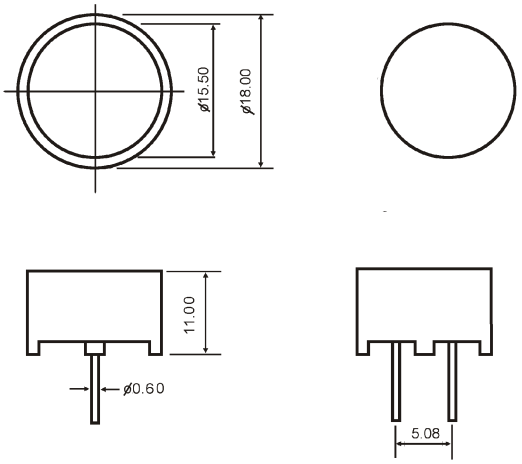

KLS9A-R053007 Series

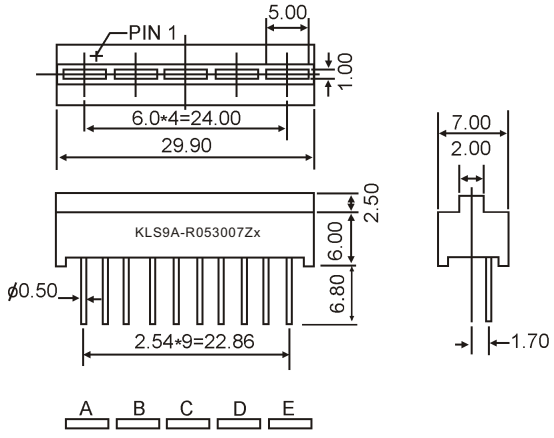

INTERNAL CIRCUIT DIAGRAM

KLS9A-S15ZX2 KLS9A-S15ZX4 KLS9A-S15ZX4-A

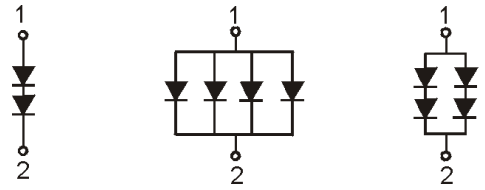

KLS9A-S15ZEG KLS9A-S15ZX4-B

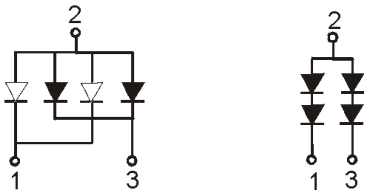

KLS9A-C18ZX2 KLS9A-C18ZX4 KLS9A-C18ZX4-A

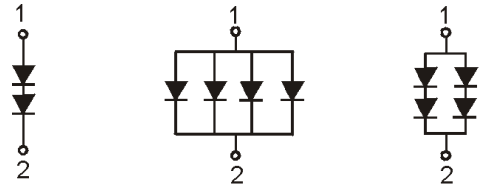

KLS9A-C18ZEG KLS9A-C18ZX4-B

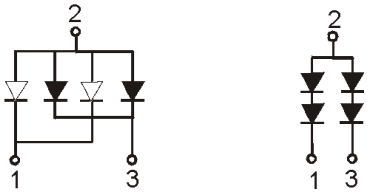

KLS9A-R053007Zx

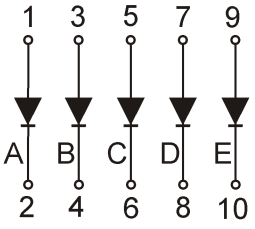

Electrical-Optical Characteristics (Ta=25℃)

PARAMETER	SYMBOL	DEVICES	CODE	TYP	MAX	UNIT	TEST CONDITIONS
Forward Voltage	V_F	RED	H	2.25	2.60	V	I_F=20mA
		HI-RED	S	1.85	2.20		
		SUPER-RED	D	1.85	2.20		
		ORANGE	E	2.10	2.50		
		GREEN	G	2.20	2.50		
		YELLOW	Y	2.10	2.50		
Peak Emission Wavelength	λ p	RED	H	700		nm	I_F=20mA
		HI-RED	S	660			
		SUPER-RED	D	660			
		ORANGE	E	635			
		GREEN	G	568			
		YELLOW	Y	585			
Spectral Line Half-Width	Δλ	RED	H	90		nm	I_F=20mA
		HI-RED	S	20			
		SUPER-RED	D	20			
		ORANGE	E	35			
		GREEN	G	30			
		YELLOW	Y	35			
Reverse Current	I_R	RED	H		20	μ A	V_R =5V
		HI-RED	S				
		SUPER-RED	D				
		ORANGE	E				
		GREEN	G				
		YELLOW	Y				
Average Luminous Intensity	I_V	RED	H	500		μ cd	I_F=10mA
		HI-RED	S	3500			
		SUPER-RED	D	6000			
		ORANGE	E	2500			
		GREEN	G	2500			
		YELLOW	Y	2000			
Segment-to-Segment Luminous Intensity Ratio	I_V-M		ALL MODELS		1.5:1		I_F =20mA

Absolute Maximum Rating(Ta=25℃)

PARAMETER		RED (Gap)	Hi-RED (GaAlAs/GaAs)	SUPER-RED (GaAlAs/GaAs)	ORANGE (GaAsP/Gap)	GREEN (Gap)	YELLOW (GaAsP/Gap)	UNIT
Reverse voltage	V_R	5	5	5	5	5	5	V
Forward current	I_F	15	25	25	30	30	30	mA
Peak forward current	I_{FP}	50	150	150	150	150	150	mA
Power dissipation	P_D	40	60	60	80	80	80	mW
Operating temperature	T_{OPR}	-40∽+80	-40∽+80	-40∽+80	-40∽+80	-40∽+80	-40∽+80	
Storage temperature	T_{STG}	-40∽+85	-40∽+85	-40∽+85	-40∽+85	-40∽+85	-40∽+85	
Lead soldering temperature		1.60mm from body-maximum 3 second for 260±5						

Remark: Duty cycle: 1:10, Pluse width: 0.1ms

Typical Electrical-Optical Characteristics Curves

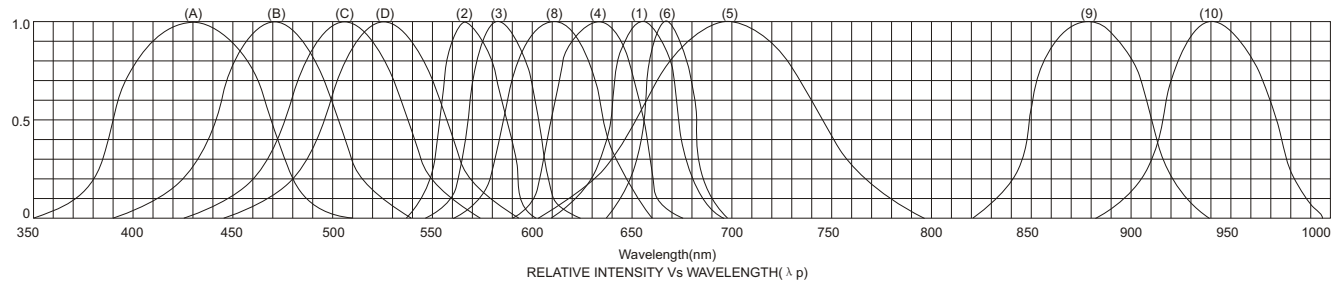

RELATIVE INTENSITY Vs WAVELENGTH(λ p)

(1) - GaAsP/GaAs 655nm/Red
(2) - GaP 568nm/Yellow Green
(3) - GaAsP/GaP 585nm/Yellow
(4) - GaAsP/GaP 635nm/Orange & Hi-Eff Red
(5) - GaP 700nm/Bright Red
(6) - GaAlAs/GaAs 660nm/Super Red
(8) - GaAsP/GaP 610nm/Super Red
(9) - GaAlAs 880nm
(10) - GaAs/GaAs & GaAlAs/GaAs 940nm
(A) - GaN/SiC 430nm/Blue
(B) - InGaN/SiC 470nm/Blue
(C) - InGaN/SiC 505nm/Super Pure Green
(D) - InGaN/SiC 525nm/Super Bluish Green

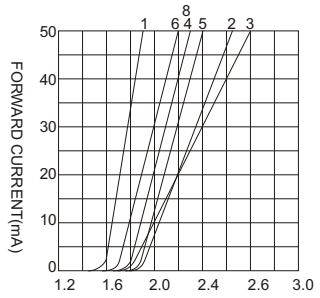

FORWARD VOLTAGE (Vf)
FORWARD CURRENT VS.
FORWARD VOLTAGE

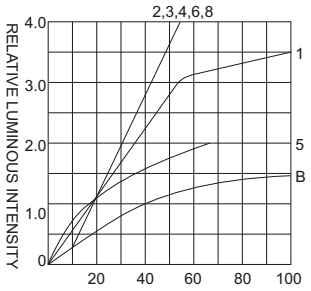

FORWARD CURRENT (mA)
RELATIVE LUMINOUS
INTENSITY VS. FORWARD
CURRENT

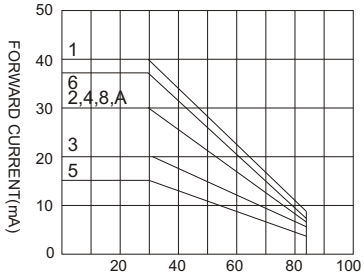

AMBIENT TEMPERATURE Ta(℃)
FORWARD CURRENT VS. AMBIENT
TEMPERATURE

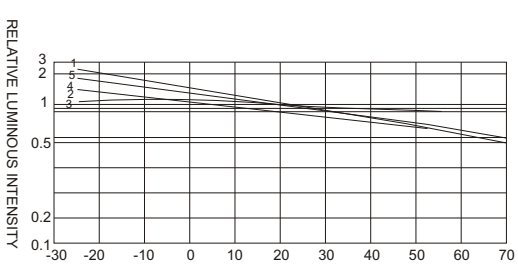

AMBIENT TEMPERATURE Ta(℃)

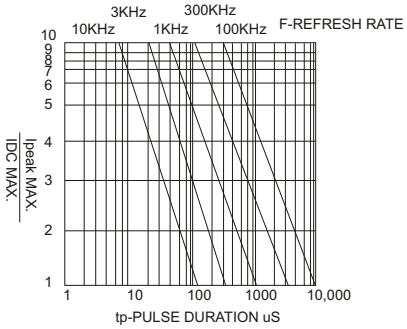

tp-PULSE DURATION uS
(1,2,3,4,6,8,B.D)

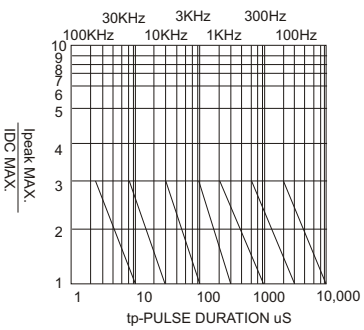

tp-PULSE DURATION uS
(5)

NOTE:25℃ free air temperature unless otherwise specified

LED Series

KLS9-L Standard LED Lamp Series

KLS9 - L - 501 3 G D - XXX
1 2 3 4 5 6 7

1. Brank: KLS ELECTRONIC
2. Digit Mode: L-Lamp
3. Package Type (style):
4. Leads Type:
   - 0: Surface Mounting Lead for SMD
   - 1: 20mm Lead Length with Stand-off
   - 2: 18mm Lead Length Standard
   - 3: 25.4mm Lead Length with big Reflector
   - 4: 25.4mm Lead Length with small Reflector
   - 5: 25.4mm Lead Length with 3 Leads for bi-color
   - 7: 25.4mm Lead Length with 2 Leads for bi-color
   - 9: 25.4mm Lead Length with 3 Leads for bi-color
5. Color Code:

H: Red	GaP / GaP	700nm	UG: High Bright Green	AlGaInP 574nm
S: High Bright Red	GaAlAs / GaAs	SH 660nm	PG: Super Pure Green	AlGaInP 525nm
D: Super Bright Red	GaAlAs / GaAs	DH 660nm	BG: Super Bluish Green	AlGaInP 505nm
UR: Ultra Bright Red	GaAlAs / GaAlAs	DDH 660nm	B: Blue GaN / SiC	430nm
UHR: Ultra Bright Red	AlGaInP	640nm	UB: Super Bright Blue	InGaN / SiC 470nm
E: Orange	GaAsP / GaP	635nm	V: UV	InGaN / SiC405nm
UE: High Bright Orange	AlGaInP	630nm	W: White	
Y: Yellow	GaAsP / GaP	585nm	EG: Orange + Green Bi-Color	
UY: High Bright Yellow	AlGaInP	590nm	SG: High Red + Green Bi-Color	
G: Green	GaP / GaP	568nm	RGB: Multicolor	

6. Len Color: D: Color Diffused T: Color Transparent C: Water Clear W: White Diffused
   CD: Color Top Diffused WD: White Top Diffused E: Orange Diffused
7. Special Operation & Other:

LED Series

KLS9-L Standard LED Lamp Series

Package	Part No. KLS9L-	Chip		Lens Appearance	Absolute Maximum Ratings				Electro-optical Data(At 20mA)			Viewing Angle 2θ1/2 (deg)	Drawing No.
		Material/Emitted Color	Peak Wave Length λp (nm)		△λ (nm)	Pd (mw)	If (mA)	Peak (mA)	Vf(V) Typ	Vf(V) Max	Iv (mcd) Typ		
T-1 Standard 1.0" Lead φ3	3004HD	GaP/GaP Red	700	Red diffused	90	40	15	50	2.25	2.60	3.0	60	L-001
	3004GD	GaP/GaP Green	568	Green diffused	30	80	30	150	2.20	2.50	15	60	
	3004ED	GaAsP/GaP Orange	635	Red diffused	35	80	30	150	2.10	2.50	20	60	
	3004ED-E	GaAsP/GaP Orange	635	Orange diffused	35	80	30	150	2.10	2.50	20	60	
	3004YD	GaAsP/GaP Yellow	585	Yellow diffused	35	80	30	150	2.10	2.50	15	60	
	3004GT	GaP/GaP Green	568	Green trans	30	80	30	150	2.20	2.50	40	30	
	3004ET	GaAsP/GaP Orange	635	Red trans	35	80	30	150	2.10	2.50	50	30	
	3004ET-E	GaAsP/GaP Orange	635	Orange trans	35	80	30	150	2.10	2.50	50	30	
	3004YT	GaAsP/GaP Yellow	585	Yellow trans	35	80	30	150	2.10	2.50	40	30	
T-1 Standard 0.5" Lead φ3	3012HD	GaP/GaP Red	700	Red diffused	90	40	15	50	2.25	2.60	3.6	80	L-002
	3012GD	GaP/GaP Green	568	Green diffused	30	80	30	150	2.20	2.50	12	80	
	3012ED	GaAsP/GaP Orange	635	Red diffused	35	80	30	150	2.10	2.50	16	80	
	3012ED-E	GaAsP/GaP Orange	635	Orange diffused	35	80	30	150	2.10	2.50	16	80	
	3012YD	GaAsP/GaP Yellow	585	Yellow diffused	35	80	30	150	2.10	2.50	12	80	

L-001 KLS9L-3004xx Series

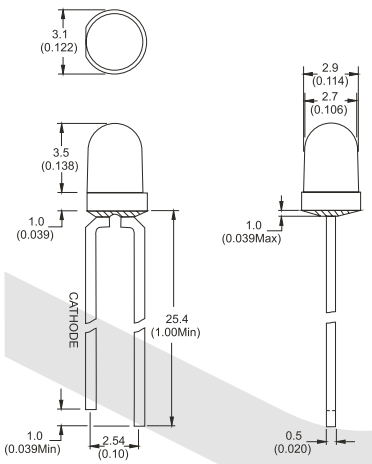

L-002 KLS9L-3012xx Series

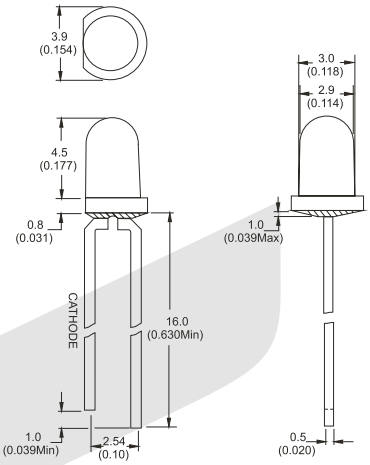

LED Series

KLS9-L Standard LED Lamp Series

Package	Part No. KLS9L-	Chip		Lens Appearance	Absolute Maximum Ratings				Electro-optical Data(At 20mA)			Viewing Angle 2θ1/2 (deg)	Drawing No.
		Material/Emitted Color	Peak Wave Length λp (nm)		△λ (nm)	Pd (mw)	If (mA)	Peak (mA)	Vf(V) Typ	Vf(V) Max	Iv (mcd) Typ		
T-1 Standard 1.0" Lead φ3	3014HD	GaP/GaP Red	700	Red diffused	90	40	15	50	2.25	2.60	3.0	60	L-003
	3014GD	GaP/GaP Green	568	Green diffused	30	80	30	150	2.20	2.50	15	60	
	3014ED	GaAsP/GaP Orange	635	Red diffused	35	80	30	150	2.10	2.50	20	60	
	3014ED-E	GaAsP/GaP Orange	635	Orange diffused	35	80	30	150	2.10	2.50	20	60	
	3014YD	GaAsP/GaP Yellow	585	Yellow diffused	35	80	30	150	2.10	2.50	15	60	
	3014GT	GaP/GaP Green	568	Green trans	30	80	30	150	2.20	2.50	40	30	
	3014ET	GaAsP/GaP Orange	635	Red trans	35	80	30	150	2.10	2.50	50	30	
	3014ET-E	GaAsP/GaP Orange	635	Orange trans	35	80	30	150	2.10	2.50	50	30	
	3014YT	GaAsP/GaP Yellow	585	Yellow trans	35	80	30	150	2.10	2.50	40	30	
T-1 3/4 Standard 1.0" Lead φ5	5012HD	GaP/GaP Red	700	Red diffused	90	40	15	50	2.25	2.60	4	80	L-004
	5012GD	GaP/GaP Green	568	Green diffused	30	80	30	150	2.20	2.50	14	80	
	5012ED	GaAsP/GaP Orange	635	Red diffused	35	80	30	150	2.10	2.50	18	80	
	5012ED-E	GaAsP/GaP Orange	635	Orange diffused	35	80	30	150	2.10	2.50	18	80	
	5012YD	GaAsP/GaP Yellow	585	Yellow diffused	35	80	30	150	2.10	2.50	14	80	

L-003 KLS9L-3014xx Series

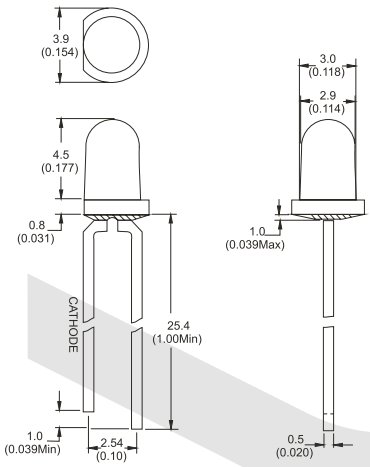

L-004 KLS9L-5012xx Series

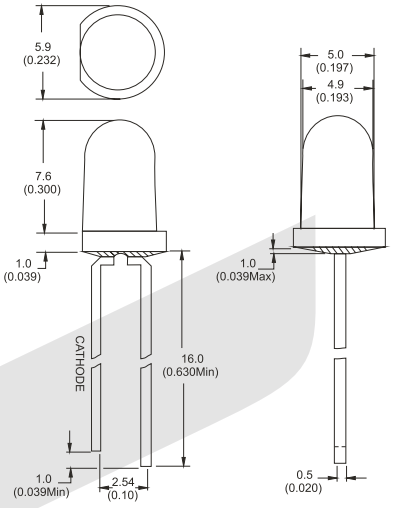

LED Series

KLS9-L Standard LED Lamp Series

Package	Part No. KLS9L-	Chip		Lens Appearance	Absolute Maximum Ratings				Electro-optical Data(At 20mA)			Viewing Angle 2θ1/2 (deg)	Drawing No.
		Material/Emitted Color	Peak Wave Length λp (nm)		△λ (nm)	Pd (mw)	If (mA)	Peak (mA)	Vf(V) Typ	Vf(V) Max	Iv (mcd) Typ		
T-1 3/4 Standard 1.0" Lead φ5	5013HD	GaP/GaP Red	700	Red diffused	90	40	15	50	2.25	2.60	5	60	L-005
	5013GD	GaP/GaP Green	568	Green diffused	30	80	30	150	2.20	2.50	20	60	
	5013ED	GaAsP/GaP Orange	635	Red diffused	35	80	30	150	2.10	2.50	30	60	
	5013ED-E	GaAsP/GaP Orange	635	Orange diffused	35	80	30	150	2.10	2.50	30	60	
	5013YD	GaAsP/GaP Yellow	585	Yellow diffused	35	80	30	150	2.10	2.50	20	60	
	5013GT	GaP/GaP Green	568	Green trans	30	80	30	150	2.20	2.50	50	30	
	5013ET	GaAsP/GaP Orange	635	Red trans	35	80	30	150	2.10	2.50	80	30	
	5013ET-E	GaAsP/GaP Orange	635	Orange trans	35	80	30	150	2.10	2.50	80	30	
	5013YT	GaAsP/GaP Yellow	585	Yellow trans	35	80	30	150	2.10	2.50	50	30	
Round 1.0" Lead φ8	8003GD	GaP/GaP Green	568	Green diffused	30	80	30	150	2.20	2.50	30	60	L-006
	8003ED	GaAsP/GaP Orange	635	Red diffused	35	80	30	150	2.10	2.50	40	60	
	8003ED-E	GaAsP/GaP Orange	635	Orange diffused	35	80	30	150	2.10	2.50	40	60	
	8003YD	GaAsP/GaP Yellow	585	Yellow diffused	35	80	30	150	2.10	2.50	30	60	
	8003GT	GaP/GaP Green	568	Green trans	30	80	30	150	2.20	2.50	60	40	
	8003ET	GaAsP/GaP Orange	635	Red trans	35	80	30	150	2.10	2.50	90	40	
	8003ET-E	GaAsP/GaP Orange	635	Orange trans	35	80	30	150	2.10	2.50	90	40	
	8003YT	GaAsP/GaP Yellow	585	Yellow trans	35	80	30	150	2.10	2.50	60	40	

L-005 KLS9L-5013xx Series

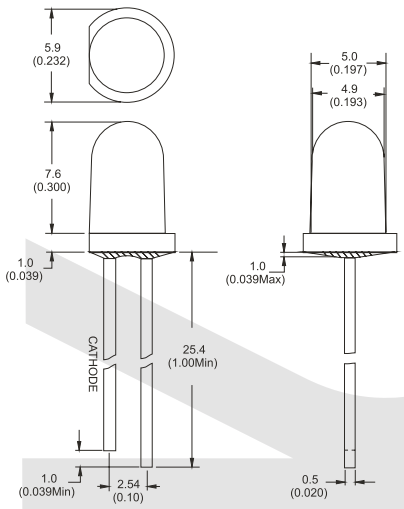

L-006 KLS9L-8003xx Series

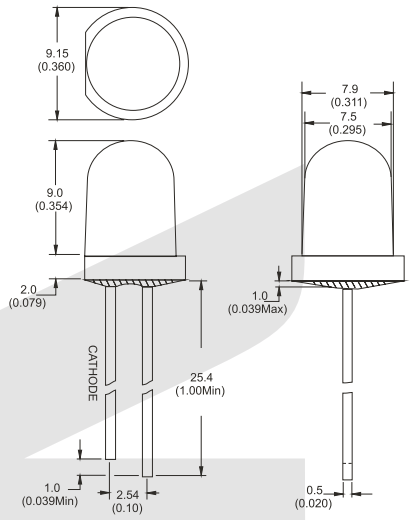

LED Series

KLS9-L Standard LED Lamp Series

Package	Part No. KSL9L-	Chip		Lens Appearance	Absolute Maximum Ratings				Electro-optical Data(At 20mA)			Viewing Angle 2θ1/2 (deg)	Drawing No.
		Material/Emitted Color	Peak Wave Length λp (nm)		△λ (nm)	Pd (mw)	If (mA)	Peak (mA)	Vf(V) Typ	Vf(V) Max	Iv (mcd) Typ		
Round 1.0" Lead φ10	10003GD	GaP/GaP Green	568	Green diffused	30	80	30	150	2.20	2.50	30	60	L-007
	10003ED	GaAsP/GaP Orange	635	Red diffused	35	80	30	150	2.10	2.50	40	60	
	10003ED-E	GaAsP/GaP Orange	635	Orange diffused	35	80	30	150	2.10	2.50	40	60	
	10003YD	GaAsP/GaP Yellow	585	Yellow diffused	35	80	30	150	2.10	2.50	30	60	
	10003GT	GaP/GaP Green	568	Green trans	30	80	30	150	2.20	2.50	60	40	
	10003ET	GaAsP/GaP Orange	635	Red trans	35	80	30	150	2.10	2.50	90	40	
	10003ET-E	GaAsP/GaP Orange	635	Orange trans	35	80	30	150	2.10	2.50	90	40	
	10003YT	GaAsP/GaP Yellow	585	Yellow trans	35	80	30	150	2.10	2.50	60	40	
2.0*5.0* 7.0mm 1.0" Lead Rectangular	2513HD	GaP/GaP Red	700	Red diffused	90	40	15	50	2.25	2.60	2	120	L-008
	2513GD	GaP/GaP Green	568	Green diffused	30	80	30	150	2.20	2.50	8	120	
	2513ED	GaAsP/GaP Orange	635	Red diffused	35	80	30	150	2.10	2.50	10	120	
	2513ED-E	GaAsP/GaP Orange	635	Orange diffused	35	80	30	150	2.10	2.50	10	120	
	2513YD	GaAsP/GaP Yellow	585	Yellow diffused	35	80	30	150	2.10	2.50	8	120	
2.0*5.0* 7.0mm 1.0" Lead Rectangular	2523HD	GaP/GaP Red	700	Red diffused	90	40	15	50	2.25	2.60	2	120	L-009
	2523GD	GaP/GaP Green	568	Green diffused	30	80	30	150	2.20	2.50	8	120	
	2523ED	GaAsP/GaP Orange	635	Red diffused	35	80	30	150	2.10	2.50	10	120	
	2523ED-E	GaAsP/GaP Orange	635	Orange diffused	35	80	30	150	2.10	2.50	10	120	
	2523YD	GaAsP/GaP Yellow	585	Yellow diffused	35	80	30	150	2.10	2.50	8	120	

L-007 KLS9L-10003xx Series

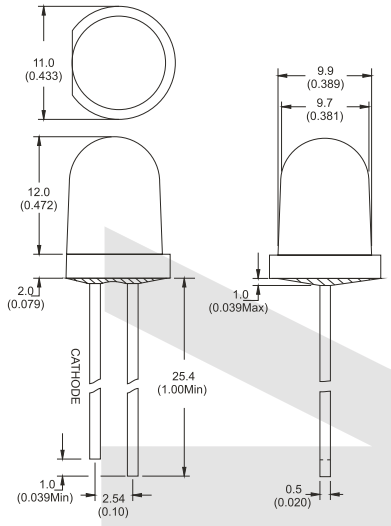

L-008 KLS9L-2513xx Series

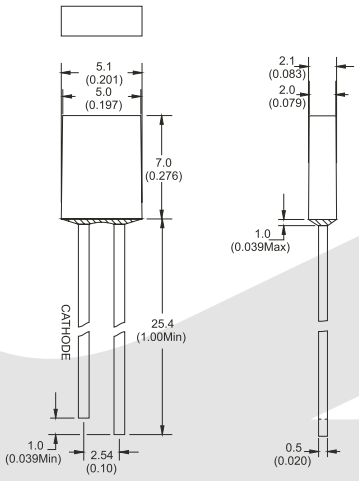

L-009 KLS9L-2523xx Series

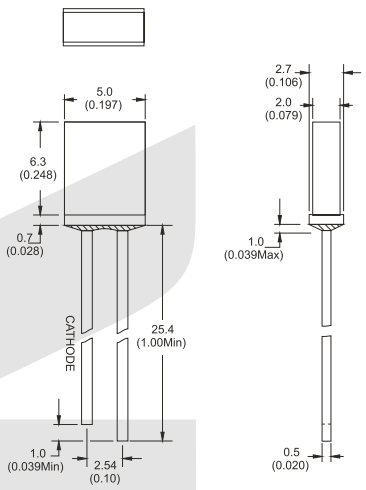

LED Series

KLS9-L Ultra Bright LED Lamp Series

KLS9 - L - 501 3 G D - XXX
1 2 3 4 5 6 7

1. Brank: KLS ELECTRONIC
2. Digit Mode: L-Lamp
3. Package Type (style):
4. Leads Type:
   - 0: Surface Mounting Lead for SMD
   - 1: 20mm Lead Length with Stand-off
   - 2: 18mm Lead Length Standard
   - 3: 25.4mm Lead Length with big Reflector
   - 4: 25.4mm Lead Length with small Reflector
   - 5: 25.4mm Lead Length with 3 Leads for bi-color
   - 7: 25.4mm Lead Length with 2 Leads for bi-color
   - 9: 25.4mm Lead Length with 3 Leads for bi-color
5. Color Code:

H: Red	GaP / GaP	700nm	UG: High Bright Green	AlGaInP 574nm
S: High Bright Red	GaAlAs / GaAs	SH 660nm	PG: Super Pure Green	AlGaInP 525nm
D: Super Bright Red	GaAlAs / GaAs	DH 660nm	BG: Super Bluish Green	AlGaInP 505nm
UR: Ultra Bright Red	GaAlAs / GaAlAs	DDH 660nm	B: Blue GaN / SiC	430nm
UHR: Ultra Bright Red	AlGaInP	640nm	UB: Super Bright Blue	InGaN / SiC 470nm
E: Orange	GaAsP / GaP	635nm	V: UV	InGaN / SiC405nm
UE: High Bright Orange	AlGaInP	630nm	W: White	
Y: Yellow	GaAsP / GaP	585nm	EG: Orange + Green Bi-Color	
UY: High Bright Yellow	AlGaInP	590nm	SG: High Red + Green Bi-Color	
G: Green	GaP / GaP	568nm	RGB: Multicolor	

6. Len Color: D: Color Diffused T: Color Transparent C: Water Clear W: White Diffused
   CD: Color Top Diffused WD: White Top Diffused E: Orange Diffused
7. Special Operation & Other:

LED Series

KLS9-L Ultra Bright LED Lamp Series

Package	Part No. KLS9L-	Chip		Lens Appearance	Absolute Maximum Ratings				Electro-optical Data(At 20mA)			Viewing Angle 2θ1/2 (deg)	Drawing No.
		Material/Emitted Color	Peak Wave Length λp (nm)		△λ (nm)	Pd (mw)	If (mA)	Peak (mA)	Vf(V)		Iv (mcd)		
									Typ	Max	Typ		
T-1 Standard 1.0" Lead φ3	3014SRD	GaAlAs/SH Super Red	660	Red diffused	20	60	25	150	1.85	2.20	70	60	L-010
	3014LRD	GaAlAs/DH Super Red	660	Red diffused	20	60	25	150	1.85	2.20	110	60	
	3014SRT	GaAlAs/SH Super Red	660	Red trans	20	60	25	150	1.85	2.20	220	30	
	3014SRC	GaAlAs/SH Super Red	660	Water clear	20	60	25	150	1.85	2.20	220	30	
	3014LRC	GaAlAs/DH Super Red	660	Water clear	20	60	25	150	1.85	2.20	500	30	
	3014URC	GaAlAs/DDHSuper Red	660	Water clear	20	60	25	150	1.85	2.20	900	30	
	3014UEC	AlGaInP/Ultra Orange	630	Water clear	17	65	30	150	2.10	2.50	1800	30	
	3014UYC	AlGaInP/Ultra Yellow	590	Water clear	15	65	30	150	2.10	2.50	2000	30	
	3014UGC	AlGaInP/Ultra Green	574	Water clear	30	75	30	150	2.20	2.50	600	30	
	3014PGC	InGaN/SiC Pure Green	525	Water clear	36	110	30	150	3.50	4.00	2800	30	
	3014BGC	InGaN/SiC Bluish Green	505	Water clear	30	110	30	100	3.50	4.00	2800	30	
	3014UBC	InGaN/SiC Ultra Blue	470	Water clear	30	120	30	100	3.50	4.00	1400	30	
	3014BC	InGaN/SiC Super Blue	470	Water clear	30	120	30	100	3.50	4.00	900	30	
	3014VC	InGaN/SiC UV	405	Water clear		120	30	100	3.50	4.00	180	30	
	3014UWC	InGaN/SiC Ultra White		Water clear		120	30	100	3.50	4.00	4000	30	
	3014WC	InGaN/SiC Super White		Water clear		120	30	100	3.50	4.00	2000	30	

L-010 KLS9L-3014xx Series

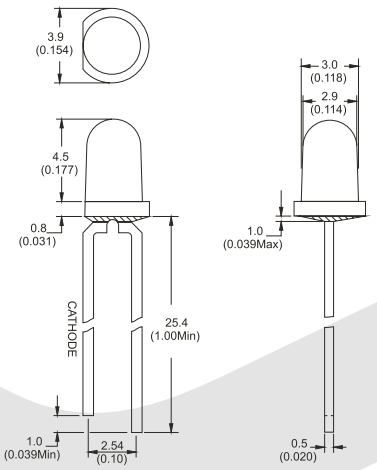

LED Series

KLS9-L Ultra Bright LED Lamp Series

Package	Part No. KLS9L-	Chip		Lens Appearance	Absolute Maximum Ratings				Electro-optical Data(At 20mA)			Viewing Angle 2θ1/2 (deg)	Drawing No.
		Material/Emitted Color	Peak Wave Length λp (nm)		△λ (nm)	Pd (mw)	If (mA)	Peak (mA)	Vf(V)		Iv (mcd)		
									Typ	Max	Typ		
T-1 3/4 Standard 1.0" Lead φ5	5013SRD	GaAlAs/SH Super Red	660	Red diffused	20	60	30	150	1.85	2.20	80	60	L-011
	5013LRD	GaAlAs/DH Super Red	660	Red diffused	20	60	30	150	1.85	2.20	120	60	
	5013SRT	GaAlAs/SH Super Red	660	Red trans	20	60	30	150	1.85	2.20	250	20	
	5013SRC	GaAlAs/SH Super Red	660	Water clear	20	60	30	150	1.85	2.20	250	20	
	5013LRC	GaAlAs/DH Super Red	660	Water clear	20	60	30	150	1.85	2.20	600	20	
	5013URC	GaAlAs/DDHSuper Red	660	Water clear	20	60	30	150	1.85	2.20	1000	20	
	5013UEC	AlGaInP/Ultra Orange	630	Water clear	17	65	30	150	2.10	2.50	2000	20	
	5013UYC	AlGaInP/Ultra Yellow	590	Water clear	15	65	30	150	2.10	2.50	2200	20	
	5013UGC	AlGaInP/Ultra Green	574	Water clear	30	75	30	150	2.20	2.50	700	20	
	5013PGC	InGaN/SiC Dure Green	525	Water clear	36	110	30	150	3.50	4.00	3000	20	
	5013BGC	InGaN/SiC Bluish Green	505	Water clear	30	110	30	100	3.50	4.00	3000	20	
	5013UBC	InGaN/SiC Ultra Blue	470	Water clear	30	120	30	100	3.50	4.00	1500	20	
	5013BC	InGaN/SiC Super Blue	470	Water clear	30	120	30	100	3.50	4.00	1000	20	
	5013VC	InGaN/SiC UV	405	Water clear		120	30	100	3.50	4.00	200	20	
	5013UWC	InGaN/SiC Ultra White		Water clear		120	30	100	3.50	4.00	6000	20	
	5013WC	In GaN/SiC Super White		Water clear		120	30	100	3.50	4.00	2500	20	

L-011 KLS9L-5013xx Series

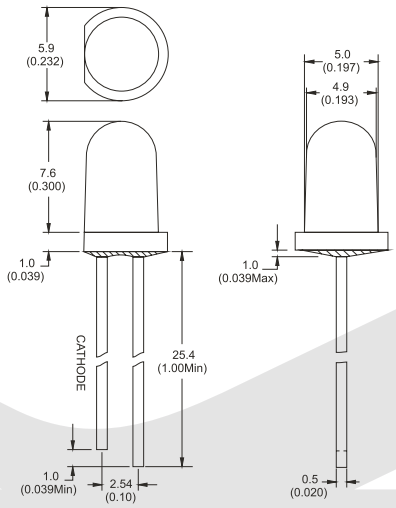

LED Series

KLS9-L Ultra Bright LED Lamp Series

Package	Part No. KLS9L-	Chip		Lens Appearance	Absolute Maximum Ratings				Electro-optical Data(At 20mA)			Viewing Angle 2θ1/2 (deg)	Drawing No.
		Material/Emitted Color	Peak Wave Length λp (nm)		△λ (nm)	Pd (mw)	If (mA)	Peak (mA)	Vf(V) Typ	Vf(V) Max	Iv (mcd) Typ		
4.1*5.0* 7.0mm 1.0" Lead Oval	5063LRC	GaAlAs/DH Super Red	660	Water clear	20	60	25	150	1.85	2.20	400	X-X 45 Y-Y 25	L-012
	5063URC	GaAlAs/DDHSuper Red	660	Water clear	20	60	25	150	1.85	2.20	600		
	5063UEC	AlGaInP/Ultra Orange	630	Water clear	17	65	30	150	2.10	2.50	750		
	5063UYC	AlGaInP/Ultra Yellow	590	Water clear	15	65	30	150	2.10	2.50	800		
	5063UGC	AlGaInP/Ultra Green	574	Water clear	30	75	30	150	2.20	2.50	500		
5.8*4.6* 7.0mm 1.0" Lead Oval	5083LRC	GaAlAs/DH Super Red	660	Water clear	20	60	25	150	1.85	2.20	350	X-X 30 Y-Y 75	L-013
	5083URC	GaAlAs/DDHSuper Red	660	Water clear	20	60	25	150	1.85	2.20	550		
	5083UEC	AlGaInP/Ultra Orange	630	Water clear	17	65	30	150	2.10	2.50	700		
	5083UYC	AlGaInP/Ultra Yellow	590	Water clear	15	65	30	150	2.10	2.50	750		
	5083UGC	AlGaInP/Ultra Green	574	Water clear	30	75	30	150	2.20	2.50	450		

L-012 KLS9L-5063xx Series

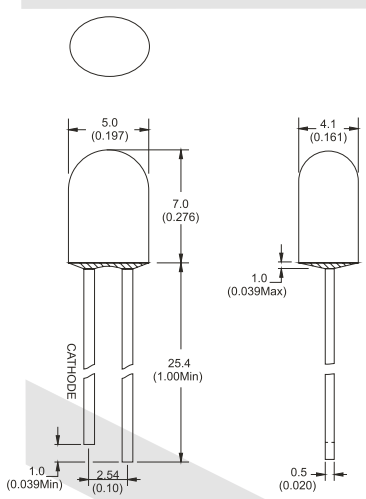

L-013 KLS9L-5083xx Series

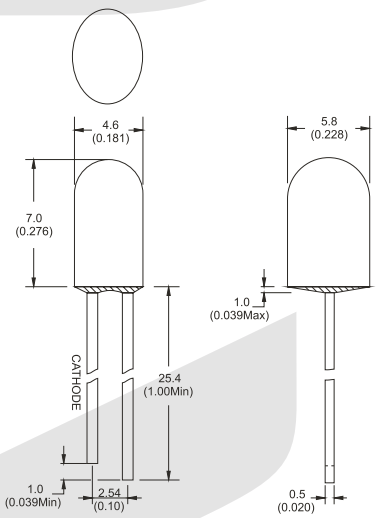

LED Series

KLS9-L Bi Color LED Lamp Series

KLS9 - L - 501 3 G D - XXX
1 2 3 4 5 6 7

1. Brank: KLS ELECTRONIC
2. Digit Mode: L-Lamp
3. Package Type (style):
4. Leads Type:
   - 0: Surface Mounting Lead for SMD
   - 1: 20mm Lead Length with Stand-off
   - 2: 18mm Lead Length Standard
   - 3: 25.4mm Lead Length with big Reflector
   - 4: 25.4mm Lead Length with small Reflector
   - 5: 25.4mm Lead Length with 3 Leads for bi-color
   - 7: 25.4mm Lead Length with 2 Leads for bi-color
   - 9: 25.4mm Lead Length with 3 Leads for bi-color
5. Color Code:

H: Red	GaP / GaP	700nm	UG: High Bright Green	AlGaInP 574nm
S: High Bright Red	GaAlAs / GaAs	SH 660nm	PG: Super Pure Green	AlGaInP 525nm
D: Super Bright Red	GaAlAs / GaAs	DH 660nm	BG: Super Bluish Green	AlGaInP 505nm
UR: Ultra Bright Red	GaAlAs / GaAlAs	DDH 660nm	B: Blue GaN / SiC	430nm
UHR: Ultra Bright Red	AlGaInP	640nm	UB: Super Bright Blue	InGaN / SiC 470nm
E: Orange	GaAsP / GaP	635nm	V: UV	InGaN / SiC405nm
UE: High Bright Orange	AlGaInP	630nm	W: White	
Y: Yellow	GaAsP / GaP	585nm	EG: Orange + Green Bi-Color	
UY: High Bright Yellow	AlGaInP	590nm	SG: High Red + Green Bi-Color	
G: Green	GaP / GaP	568nm	RGB: Multicolor	

6. Len Color: D: Color Diffused T: Color Transparent C: Water Clear W: White Diffused
   CD: Color Top Diffused WD: White Top Diffused E: Orange Diffused
7. Special Operation & Other:

LED Series

KLS9-L Bi Color LED Lamp Series

Package	Part No. KLS9L-	Chip		Lens Appearance	Absolute Maximum Ratings				Electro-optical Data(At 20mA)			Viewing Angle 2θ1/2 (deg)	Drawing No.
		Material/Emitted Color	Peak Wave Length λp (nm)		△λ (nm)	Pd (mw)	If (mA)	Peak (mA)	Vf(V) Typ	Vf(V) Max	Iv (mcd) Typ		
T-1 Standard 1.0" Lead φ3	3015EGW	GaAsP/GaP Orange	635	Water diffused	35	80	30	150	2.10	2.50	15	60	L-014
		GaP/GaP Green	568	Water diffused	30	80	30	150	2.20	2.50	10		
	3015YGW	GaAsP/GaP Yellow	585	Water diffused	35	80	30	150	2.10	2.50	10		
		GaP/GaP Green	568	Water diffused	30	80	30	150	2.20	2.50	10		
	3015UE UGW	AlGaInP/Ultra Orange	630	Water diffused	17	65	30	150	2.10	2.50	180		
		AlGaInP/Ultra Green	574	Water diffused	30	75	30	150	2.20	2.50	120		
T-1 Standard 1.0" Lead φ3	3017EGW	GaAsP/GaP Orange	635	Water diffused	35	80	30	150	2.10	2.50	15	60	L-015
		GaP/GaP Green	568	Water diffused	30	80	30	150	2.20	2.50	10		
	3017YGW	GaAsP/GaP Yellow	585	Water diffused	35	80	30	150	2.10	2.50	10		
		GaP/GaP Green	568	Water diffused	30	80	30	150	2.20	2.50	10		
	3017UE UGW	AlGaInP/Ultra Orange	630	Water diffused	17	65	30	150	2.10	2.50	180		
		AlGaInP/Ultra Green	574	Water diffused	30	75	30	150	2.20	2.50	120		

L-014 KLS9L-3015xx Series

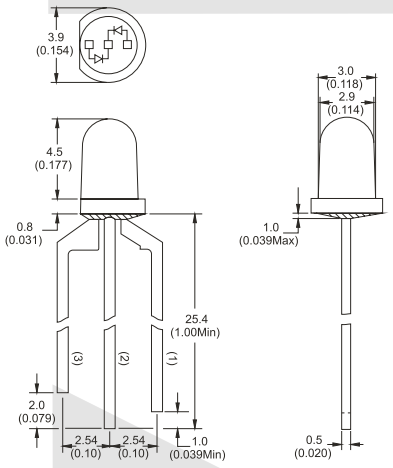

	GREEN	RED ORANGE YELLOW
PIN1	ANODE	
PIN2	CATHODE	CATHODE
PIN3		ANODE

L-015 KLS9L-3017xx Series

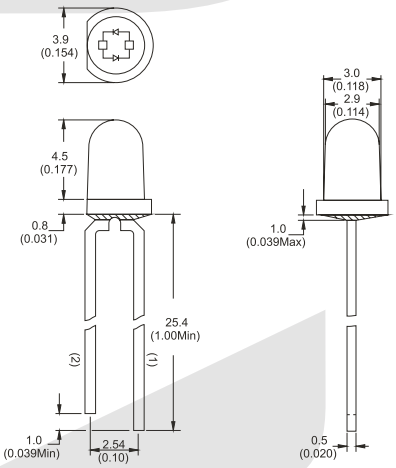

	GREEN	RED ORANGE YELLOW
PIN1	ANODE	CATHODE
PIN2	CATHODE	ANODE

LED Series

KLS9-L Bi Color LED Lamp Series

Package	Part No. KLS9L-	Chip		Lens Appearance	Absolute Maximum Ratings				Electro-optical Data(At 20mA)			Viewing Angle 2θ1/2 (deg)	Drawing No.
		Material/Emitted Color	Peak Wave Length λp (nm)		△λ (nm)	Pd (mw)	If (mA)	Peak (mA)	Vf(V) Typ	Vf(V) Max	Iv (mcd) Typ		
T-1 3/4 Standard 1.0" Lead ϕ5	5019EGW	GaAsP/GaP Orange	635	Water diffused	35	80	30	150	2.10	2.50	20	60	L-016
		GaP/GaP Green	568	Water diffused	30	80	30	150	2.20	2.50	15		
	5019YGW	GaAsP/GaP Yellow	585	Water diffused	35	80	30	150	2.10	2.50	15		
		GaP/GaP Green	568	Water diffused	30	80	30	150	2.20	2.50	15		
	5019UE UGW	AlGaInP/Ultra Orange	630	Water diffused	17	65	30	150	2.10	2.50	190		
		AlGaInP/Ultra Green	574	Water diffused	30	75	30	150	2.20	2.50	130		
T-1 3/4 Standard 1.0" Lead ϕ5	5017EGW	GaAsP/GaP Orange	635	Water diffused	35	80	30	150	2.10	2.50	20	60	L-017
		GaP/GaP Green	568	Water diffused	30	80	30	150	2.20	2.50	15		
	5017YGW	GaAsP/GaP Yellow	585	Water diffused	35	80	30	150	2.10	2.50	15		
		GaP/GaP Green	568	Water diffused	30	80	30	150	2.20	2.50	15		
	5017UE UGW	AlGaInP/Ultra Orange	630	Water diffused	17	65	30	150	2.10	2.50	190		
		AlGaInP/Ultra Green	574	Water diffused	30	75	30	150	2.20	2.50	130		

L-016 KLS9L-5019xx Series

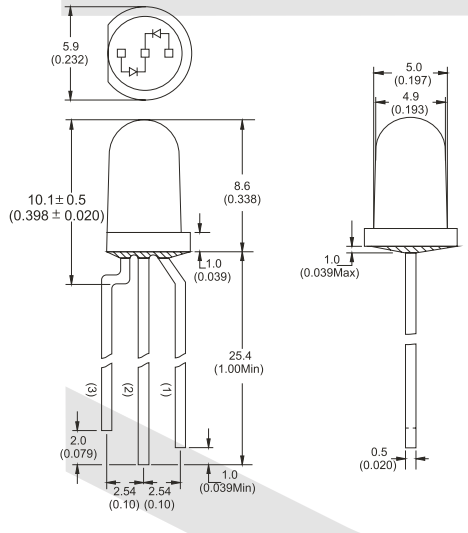

	GREEN	RED ORANGE YELLOW
PIN1	ANODE	
PIN2	CATHODE	CATHODE
PIN3		ANODE

L-017 KLS9L-5017xx Series

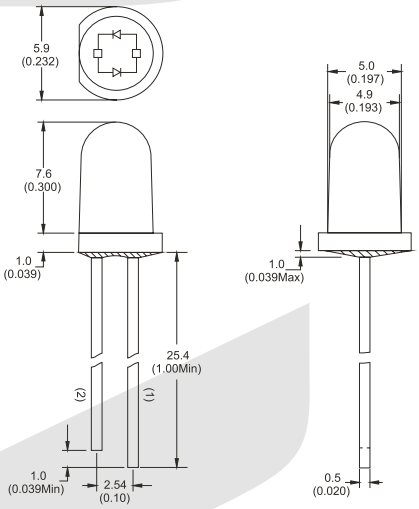

	GREEN	RED ORANGE YELLOW
PIN1	ANODE	CATHODE
PIN2	CATHODE	ANODE

LED Series

KLS9-L Surface Mount LED Lamp Series

KLS9 - L - 501 3 G D - XXX
1 2 3 4 5 6 7

1. Brank: KLS ELECTRONIC
2. Digit Mode: L-Lamp
3. Package Type (style):
4. Leads Type:
   - 0: Surface Mounting Lead for SMD
   - 1: 20mm Lead Length with Stand-off
   - 2: 18mm Lead Length Standard
   - 3: 25.4mm Lead Length with big Reflector
   - 4: 25.4mm Lead Length with small Reflector
   - 5: 25.4mm Lead Length with 3 Leads for bi-color
   - 7: 25.4mm Lead Length with 2 Leads for bi-color
   - 9: 25.4mm Lead Length with 3 Leads for bi-color
5. Color Code:

H: Red	GaP / GaP	700nm	UG: High Bright Green	AlGaInP 574nm
S: High Bright Red	GaAlAs / GaAs	SH 660nm	PG: Super Pure Green	AlGaInP 525nm
D: Super Bright Red	GaAlAs / GaAs	DH 660nm	BG: Super Bluish Green	AlGaInP 505nm
UR: Ultra Bright Red	GaAlAs / GaAlAs	DDH 660nm	B: Blue GaN / SiC	430nm
UHR: Ultra Bright Red	AlGaInP	640nm	UB: Super Bright Blue	InGaN / SiC 470nm
E: Orange	GaAsP / GaP	635nm	V: UV	InGaN / SiC405nm
UE: High Bright Orange	AlGaInP	630nm	W: White	
Y: Yellow	GaAsP / GaP	585nm	EG: Orange + Green Bi-Color	
UY: High Bright Yellow	AlGaInP	590nm	SG: High Red + Green Bi-Color	
G: Green	GaP / GaP	568nm	RGB: Multicolor	

6. Len Color: D: Color Diffused T: Color Transparent C: Water Clear W: White Diffused
   CD: Color Top Diffused WD: White Top Diffused E: Orange Diffused
7. Special Operation & Other:

LED Series

KLS9-L Surface Mount LED Lamp Series

Package	Part No. KLS9L-	Chip		Lens Appearance	Absolute Maximum Ratings				Electro-optical Data(At 20mA)			Viewing Angle 2θ1/2 (deg)	Drawing No.
		Material/Emitted Color	Peak Wave Length λp (nm)		△λ (nm)	Pd (mw)	If (mA)	Peak (mA)	Vf(V)		Iv (mcd)		
									Typ	Max	Typ		
0.8*1.6*0.8mm SMD	0603LRC	GaAlAs/DH Super Red	660	Water clear	20	60	30	150	1.85	2.20	35	120	L-018
	0603UEC	AlGaInP/Ultra Orange	630	Water clear	17	65	30	150	2.10	2.50	60	120	
	0603GC	GaP/GaP Green	568	Water clear	30	80	30	150	2.20	2.50	12	120	
	0603UBC	InGaN/SiC Ultra Blue	470	Water clear	30	120	30	100	3.80	4.50	50	120	
1.25*2.0*0.8mm SMD	0805LRC	GaAlAs/DH Super Red	660	Water clear	20	60	30	150	1.85	2.20	35	120	L-019
	0805UEC	AlGaInP/Ultra Orange	630	Water clear	17	65	30	150	2.10	2.50	60	120	
	0805GC	GaP/GaP Green	568	Water clear	30	80	30	150	2.20	2.50	12	120	
	0805UBC	InGaN/SiC Ultra Blue	470	Water clear	30	120	30	100	3.80	4.50	50	120	

L-018 KLS9L-0603xx Series

Unit: mm Tolerance:+/-0.1

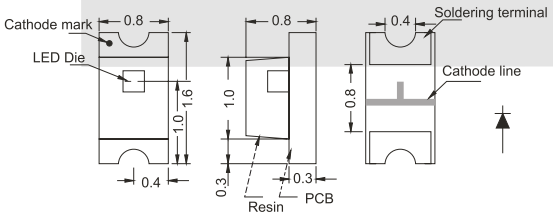

1. Soldering terminal (size: 0.4X1.1 mm) may shift in x, y direction.

Recommended Soldering Pattern for Reflow Soldering

Unit: mm

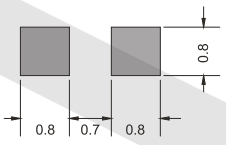

L-019 KLS9L-0805xx Series

Unit: mm Tolerance:+/-0.1

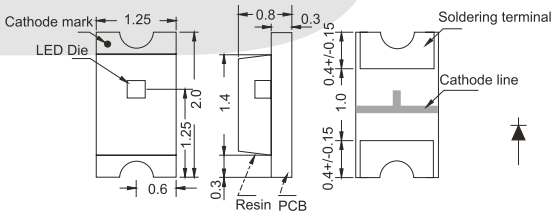

1. Soldering terminal (size: 0.4X1.1 mm) may shift in x, y direction.

Recommended Soldering Pattern for Reflow Soldering

Unit: mm

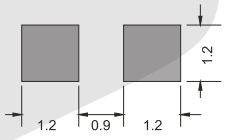

LED Series

KLS9-L Flux LED Lamp Series

KLS9 - L - 501 3 G D - XXX
1 2 3 4 5 6 7

1. Brank: KLS ELECTRONIC
2. Digit Mode: L-Lamp
3. Package Type (style):
4. Leads Type:
   - 0: Surface Mounting Lead for SMD
   - 1: 20mm Lead Length with Stand-off
   - 2: 18mm Lead Length Standard
   - 3: 25.4mm Lead Length with big Reflector
   - 4: 25.4mm Lead Length with small Reflector
   - 5: 25.4mm Lead Length with 3 Leads for bi-color
   - 7: 25.4mm Lead Length with 2 Leads for bi-color
   - 9: 25.4mm Lead Length with 3 Leads for bi-color
5. Color Code:

H: Red	GaP / GaP	700nm	UG: High Bright Green	AlGaInP 574nm
S: High Bright Red	GaAlAs / GaAs	SH 660nm	PG: Super Pure Green	AlGaInP 525nm
D: Super Bright Red	GaAlAs / GaAs	DH 660nm	BG: Super Bluish Green	AlGaInP 505nm
UR: Ultra Bright Red	GaAlAs / GaAlAs	DDH 660nm	B: Blue GaN / SiC	430nm
UHR: Ultra Bright Red	AlGaInP	640nm	UB: Super Bright Blue	InGaN / SiC 470nm
E: Orange	GaAsP / GaP	635nm	V: UV	InGaN / SiC405nm
UE: High Bright Orange	AlGaInP	630nm	W: White	
Y: Yellow	GaAsP / GaP	585nm	EG: Orange + Green Bi-Color	
UY: High Bright Yellow	AlGaInP	590nm	SG: High Red + Green Bi-Color	
G: Green	GaP / GaP	568nm	RGB: Multicolor	

6. Len Color: D: Color Diffused T: Color Transparent C: Water Clear W: White Diffused
   CD: Color Top Diffused WD: White Top Diffused E: Orange Diffused
7. Special Operation & Other:

LED Series

KLS9-L Flux LED Lamp Series

Package	Part No. KLS9L-	Chip		Lens Appearance	Absolute Maximum Ratings				Electro-optical Data(At 70mA)			Viewing Angle 2θ1/2 (deg)	Drawing No.
		Material/Emitted Color	Peak Wave Length λp (nm)		△λ (nm)	Pd (mw)	If (mA)	Peak (mA)	Vf(V) Typ	Vf(V) Max	Iv (mcd) Typ		
7.62*7.62 *4.0mm φ3	1860URC	GaAlAs/DDHSuper Red	660	Water clear	20	60	70	150	1.85	2.20	2200	75	L-020
	1860UEC	AlGaInP/Ultra Orange	630	Water clear	17	65	70	150	2.10	2.50	2800		
	1860UYC	AlGaInP/Ultra Yellow	590	Water clear	15	65	70	150	2.10	2.50	2800		
	1860UGC	AlGaInP/Ultra Green	574	Water clear	30	75	70	150	2.20	2.50	1500		
7.62*7.62 *4.4mm φ3	1870URC	GaAlAs/DDHSuper Red	660	Water clear	20	60	70	150	1.85	2.20	2500	50	L-021
	1870UEC	AlGaInP/Ultra Orange	630	Water clear	17	65	70	150	2.10	2.50	3000		
	1870UYC	AlGaInP/Ultra Yellow	590	Water clear	15	65	70	150	2.10	2.50	3000		
	1870UGC	AlGaInP/Ultra Green	574	Water clear	30	75	70	150	2.20	2.50	1800		

L-020 KLS9L-1860xx Series

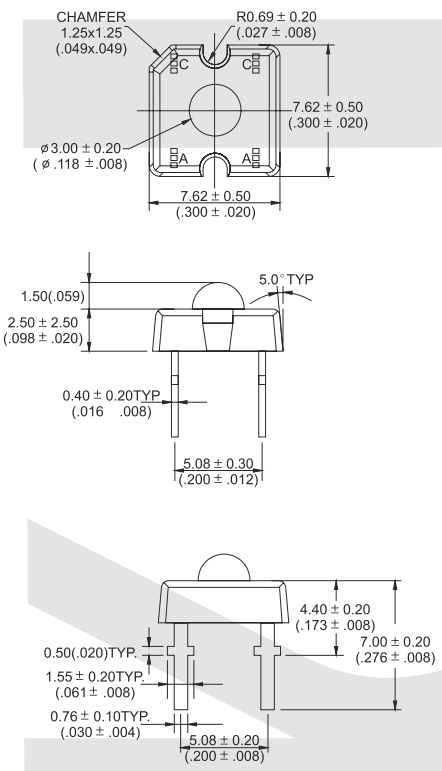

L-021 KLS9L-1870xx Series

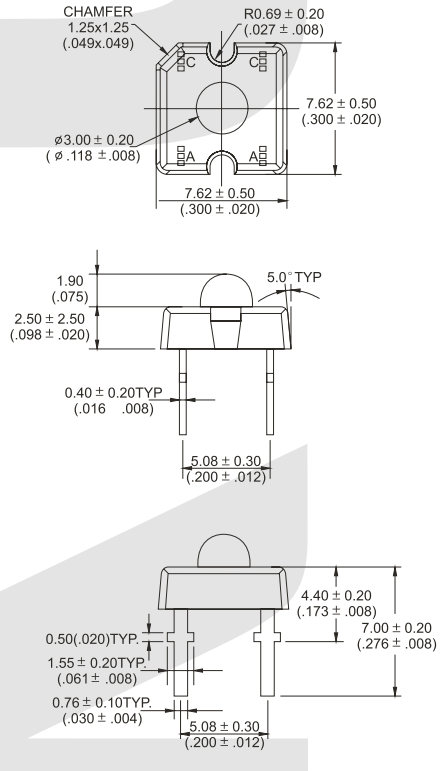

LED Series

KLS9-L Infrared Emitting Diode Series

KLS9 - L - 501 3 G D - XXX
1 2 3 4 5 6 7

1. Brank: KLS ELECTRONIC
2. Digit Mode: L-Lamp
3. Package Type (style):
4. Leads Type:
   - 0: Surface Mounting Lead for SMD
   - 1: 20mm Lead Length with Stand-off
   - 2: 18mm Lead Length Standard
   - 3: 25.4mm Lead Length with big Reflector
   - 4: 25.4mm Lead Length with small Reflector
   - 5: 25.4mm Lead Length with 3 Leads for bi-color
   - 7: 25.4mm Lead Length with 2 Leads for bi-color
   - 9: 25.4mm Lead Length with 3 Leads for bi-color
5. Color Code:

H: Red	GaP / GaP	700nm	UG: High Bright Green	AlGaInP 574nm
S: High Bright Red	GaAlAs / GaAs	SH 660nm	PG: Super Pure Green	AlGaInP 525nm
D: Super Bright Red	GaAlAs / GaAs	DH 660nm	BG: Super Bluish Green	AlGaInP 505nm
UR: Ultra Bright Red	GaAlAs / GaAlAs	DDH 660nm	B: Blue GaN / SiC	430nm
UHR: Ultra Bright Red	AlGaInP	640nm	UB: Super Bright Blue	InGaN / SiC 470nm
E: Orange	GaAsP / GaP	635nm	V: UV	InGaN / SiC405nm
UE: High Bright Orange	AlGaInP	630nm	W: White	
Y: Yellow	GaAsP / GaP	585nm	EG: Orange + Green Bi-Color	
UY: High Bright Yellow	AlGaInP	590nm	SG: High Red + Green Bi-Color	
G: Green	GaP / GaP	568nm	RGB: Multicolor	

6. Len Color: D: Color Diffused T: Color Transparent C: Water Clear W: White Diffused
   CD: Color Top Diffused WD: White Top Diffused E: Orange Diffused
7. Special Operation & Other:

LED Series

KLS9-L Infrared Emitting Diode Series

Package	Part No. KLS9L-	Chip		Lens Appearance	Absolute Maximum Ratings				Electro-optical Data(At 50mA)			Viewing Angle 2θ1/2 (deg)	Drawing No.
		Material/Emitted Color	Peak Wave Length λp (nm)		△λ (nm)	Pd (mw)	If (mA)	Peak (mA)	Vf(V)		Radiant Power (mw/sr)		
									Typ	Max	Typ		
T-1 Standard 1.0" Lead ϕ3	3014IRAC	GaAs/GaAs	940	Water clear	50	150	50	250	1.40	1.60	25	40	L-024
	3014IRAB	GaAs/GaAs	940	Blue trans	50	150	50	250	1.40	1.60	25		
	3014IRBC	GaAlAs/GaAlAs	880	Water clear	50	150	50	250	1.70	2.00	25		
	3014IRBB	GaAlAs/GaAlAs	880	Blue trans	50	150	50	250	1.70	2.00	25		
	3014IRCC	GaAlAs/GaAlAs	850	Water clear	50	150	50	250	1.70	2.00	45		
	3014IRCB	GaAlAs/GaAlAs	850	Blue trans	50	150	50	250	1.70	2.00	45		
T-1 3/4 Standard 1.0" Lead ϕ5	5013IRAC	GaAs/GaAs	940	Water clear	50	150	50	250	1.40	1.60	30	30	L-025
	5013IRAB	GaAs/GaAs	940	Blue trans	50	150	50	250	1.40	1.60	30		
	5013IRBC	GaAlAs/GaAlAs	880	Water clear	50	150	50	250	1.70	2.00	30		
	5013IRBB	GaAlAs/GaAlAs	880	Blue trans	50	150	50	250	1.70	2.00	30		
	5013IRCC	GaAlAs/GaAlAs	850	Water clear	50	150	50	250	1.70	2.00	50		
	5013IRCB	GaAlAs/GaAlAs	850	Blue trans	50	150	50	250	1.70	2.00	50		

L-024 KLS9L-3014xx Series

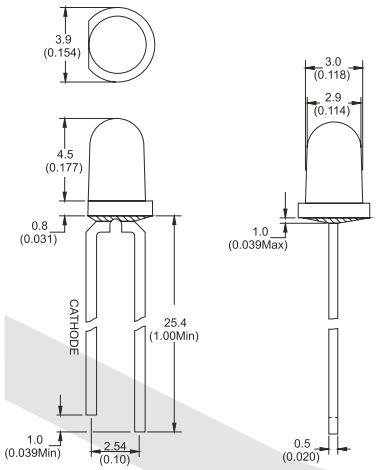

L-025 KLS9L-5013xx Series

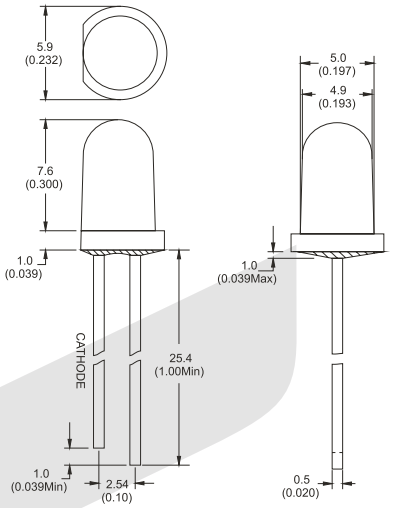

LED LAMP CLUSTER Series

KLS9-CLR15A 15mm Round LED LAMP CLUSTER Series

KLS9 - CL - R 15 A R1G2B1- XXX
1 2 3 4 5 6 7

1. Brank: KLS ELECTRONIC
2. Digit Mode: CL-Lamp Cluster
3. Shape: R-Round S-Square
4. Display Unit Dimension and Quantity:
5. Model Number: A. B. C. ... ...
6. Color Code:

H: Red	GaP/GaP		700nm	UG: High Bright Green	AlGaInP		574nm
S: High Bright Red	GaAlAs/GaAs	SH	660nm	PG: Super Pure Green	AlGaInP		525nm
D: Super Bright Red	GaAlAs/GaAs	DH	660nm	BG: Super Bluish Green	AlGaInP		505nm
UR: Ultra Bright Red	GaAlAs/GaAlAs	DDH	660nm	B: Blue GaN/SiC			430nm
UHR: Ultra Bright Red	AlGaInP		640nm	UB: Super Bright Blue	InGaN/SiC		470nm
E: Orange	GaAsP/GaP		635nm	V: UV	InGaN/SiC		405nm
UE: High Bright Orange	AlGaInP		630nm	W: White			
Y: Yellow	GaAsP/GaP		585nm	EG: Orange+Green Bi-Color			
UY: High Bright Yellow	AlGaInP		590nm	SG: High Red+Green Bi-Color			
G: Green	GaP/GaP		568nm	RGB: Multicolor			

7. Special Device:

LED LAMP CLUSTER Series

KLS9-CLR15A 15mm Round LED LAMP CLUSTER Series

PACKAGE DIMENSION

KLS9-CLR15A Series

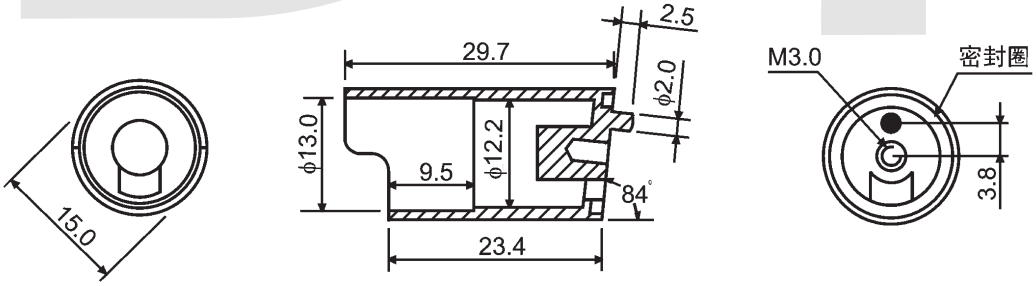

INTERNAL CIRCUIT DIAGRAM

KLS9-CLR15AR3G4

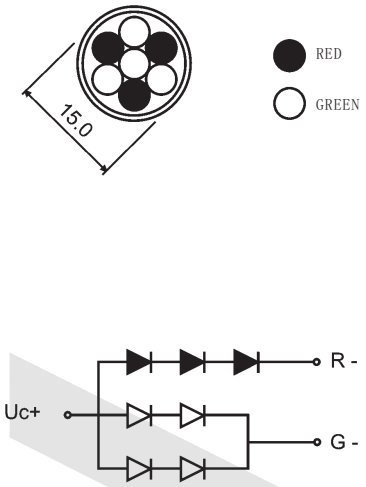

KLS9-CLR15AR2G3

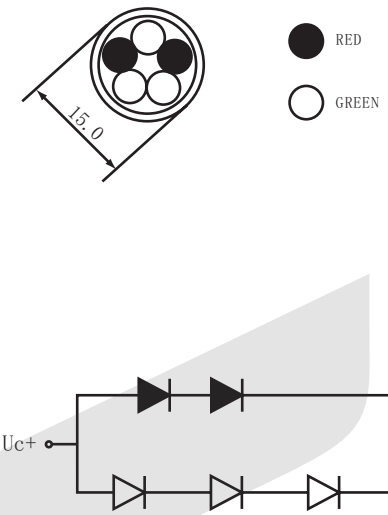

LED LAMP CLUSTER Series

KLS9-CLR19A 19mm Round LED LAMP CLUSTER Series

KLS9 - CL - R 19 A R1G2B1- XXX
1 2 3 4 5 6 7

1. Brank: KLS ELECTRONIC
2. Digit Mode: CL-Lamp Cluster
3. Shape: R-Round S-Square
4. Display Unit Dimension and Quantity:
5. Model Number: A. B. C. ... ...
6. Color Code:

H: Red	GaP/GaP		700nm	UG: High Bright Green	AlGaInP		574nm
S: High Bright Red	GaAlAs/GaAs	SH	660nm	PG: Super Pure Green	AlGaInP		525nm
D: Super Bright Red	GaAlAs/GaAs	DH	660nm	BG: Super Bluish Green	AlGaInP		505nm
UR: Ultra Bright Red	GaAlAs/GaAlAs	DDH	660nm	B: Blue GaN/SiC			430nm
UHR: Ultra Bright Red	AlGaInP		640nm	UB: Super Bright Blue	InGaN/SiC		470nm
E: Orange	GaAsP/GaP		635nm	V: UV	InGaN/SiC		405nm
UE: High Bright Orange	AlGaInP		630nm	W: White			
Y: Yellow	GaAsP/GaP		585nm	EG: Orange+Green Bi-Color			
UY: High Bright Yellow	AlGaInP		590nm	SG: High Red+Green Bi-Color			
G: Green	GaP/GaP		568nm	RGB: Multicolor			

7. Special Device:

LED LAMP CLUSTER Series

KLS9-CLR19A 19mm Round LED LAMP CLUSTER Series

IX

PACKAGE DIMENSION

KLS9-CLR19A Series

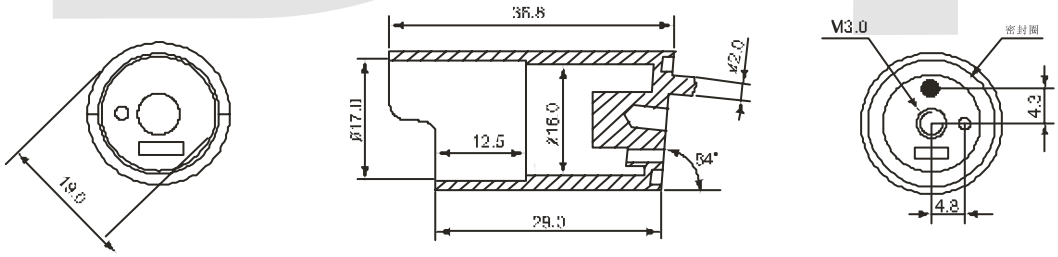

INTERNAL CIRCUIT DIAGRAM

KLS9-CLR19AR4

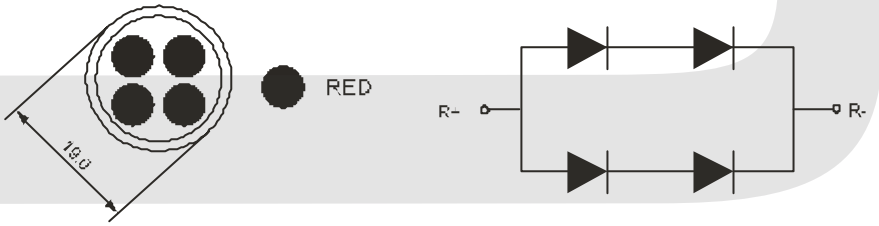

KLS9-CLR19AR3G4

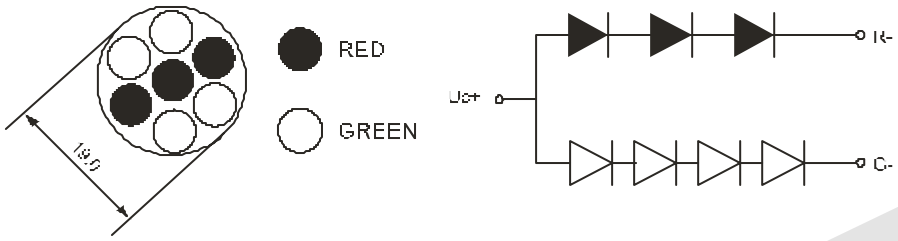

KLS9-CLR19AR2G2B1

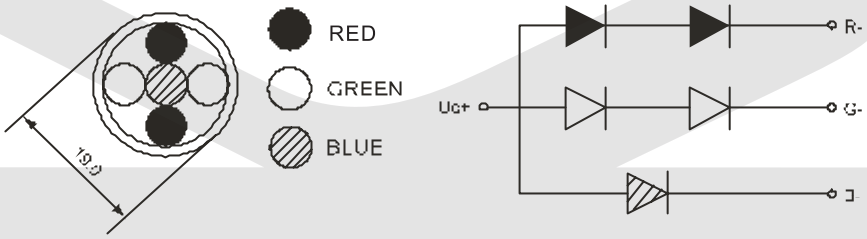

LED LAMP CLUSTER Series

KLS9-CLR26A 26mm Round LED LAMP CLUSTER Series

KLS9	-	CL	-	R	26	A	R1G2B1-	XXX
1		2		3	4	5	6	7

1. Brank: KLS ELECTRONIC
2. Digit Mode: CL-Lamp Cluster
3. Shape: R-Round S-Square
4. Display Unit Dimension and Quantity:
5. Model Number: A. B. C. ... ...
6. Color Code:

H: Red	GaP/GaP		700nm	UG: High Bright Green	AlGaInP		574nm
S: High Bright Red	GaAlAs/GaAs	SH	660nm	PG: Super Pure Green	AlGaInP		525nm
D: Super Bright Red	GaAlAs/GaAs	DH	660nm	BG: Super Bluish Green	AlGaInP		505nm
UR: Ultra Bright Red	GaAlAs/GaAlAs	DDH	660nm	B: Blue GaN/SiC			430nm
UHR: Ultra Bright Red	AlGaInP		640nm	UB: Super Bright Blue	InGaN/SiC		470nm
E: Orange	GaAsP/GaP		635nm	V: UV	InGaN/SiC		405nm
UE: High Bright Orange	AlGaInP		630nm	W: White			
Y: Yellow	GaAsP/GaP		585nm	EG: Orange+Green Bi-Color			
UY: High Bright Yellow	AlGaInP		590nm	SG: High Red+Green Bi-Color			
G: Green	GaP/GaP		568nm	RGB: Multicolor			

7. Special Device:

LED LAMP CLUSTER Series

KLS9-CLR26A 26mm Round LED LAMP CLUSTER Series

PACKAGE DIMENSION

KLS9CL-R26x Series

SPEC.	A	B	C	D
R26A	$26^{+0.0}_{-0.1}$	23.8	7.5	80°
R26B	$26^{+0.0}_{-0.1}$	23.8	9.5	80°
R26C	$26^{+0.0}_{-0.1}$	23.8	14.5	80°

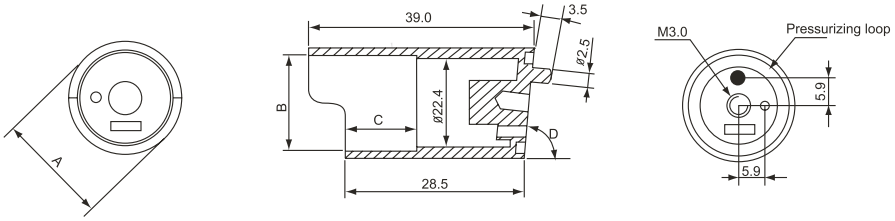

INTERNAL CIRCUIT DIAGRAM

KLS9CL-R26xR5G10

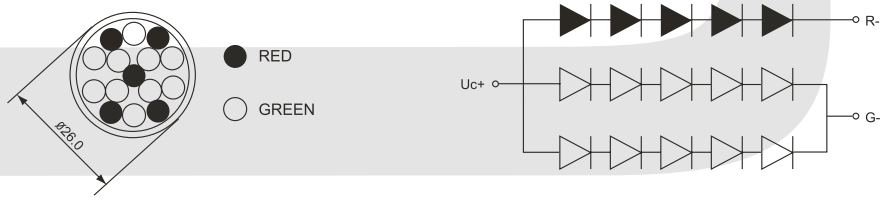

KLS9CL-R26xR6G8

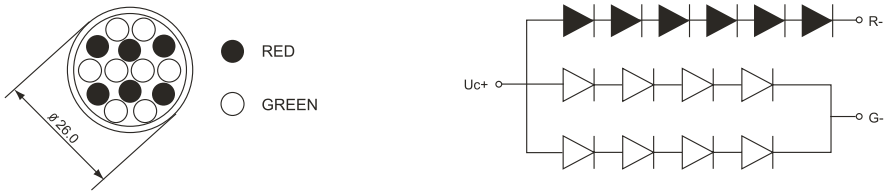

KLS9CL-R26xR3G9B1

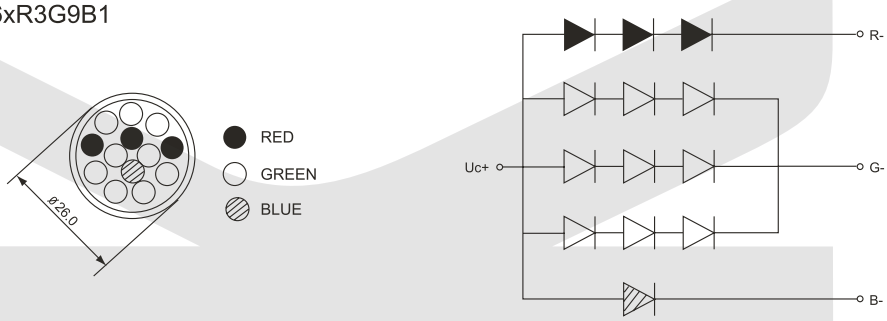

LED LAMP CLUSTER Series

KLS9-CLR52A 52mm Round LED LAMP CLUSTER Series

KLS9 - CL - R 52 A R1G2B1- XXX
1 2 3 4 5 6 7

1. Brank: KLS ELECTRONIC
2. Digit Mode: CL-Lamp Cluster
3. Shape: R-Round S-Square
4. Display Unit Dimension and Quantity:
5. Model Number: A. B. C. ... ...
6. Color Code:

H: Red	GaP/GaP		700nm	UG: High Bright Green	AlGaInP		574nm
S: High Bright Red	GaAlAs/GaAs	SH	660nm	PG: Super Pure Green	AlGaInP		525nm
D: Super Bright Red	GaAlAs/GaAs	DH	660nm	BG: Super Bluish Green	AlGaInP		505nm
UR: Ultra Bright Red	GaAlAs/GaAlAs	DDH	660nm	B: Blue GaN/SiC			430nm
UHR: Ultra Bright Red	AlGaInP		640nm	UB: Super Bright Blue	InGaN/SiC		470nm
E: Orange	GaAsP/GaP		635nm	V: UV	InGaN/SiC		405nm
UE: High Bright Orange	AlGaInP		630nm	W: White			
Y: Yellow	GaAsP/GaP		585nm	EG: Orange+Green Bi-Color			
UY: High Bright Yellow	AlGaInP		590nm	SG: High Red+Green Bi-Color			
G: Green	GaP/GaP		568nm	RGB: Multicolor			

7. Special Device:

LED LAMP CLUSTER Series

KLS9-CLR52A 52mm Round LED LAMP CLUSTER Series

PACKAGE DIMENSION

KLS9CL-R52A Series

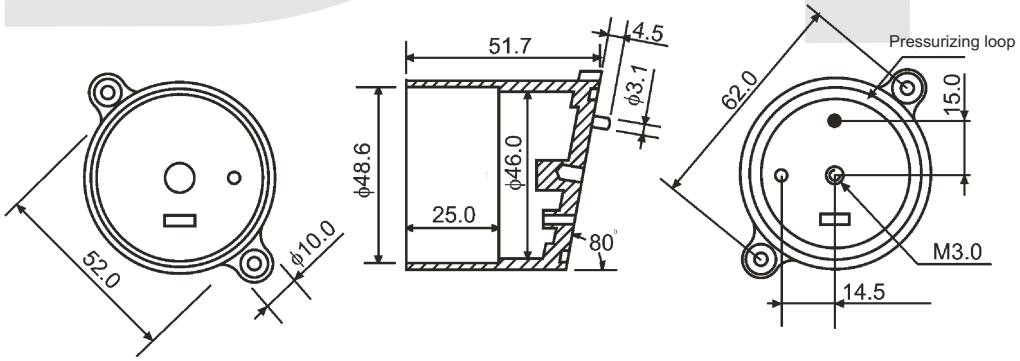

INTERNAL CIRCUIT DIAGRAM

KLS9CL-R52AR20G30

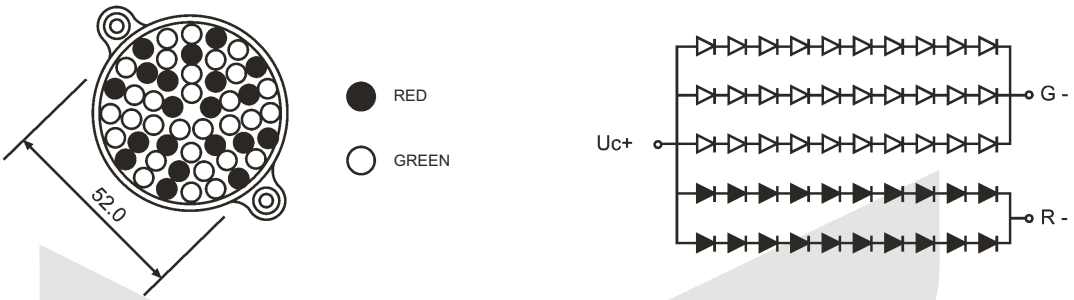

LED LAMP CLUSTER Series

KLS9-CLS15A 15x15 Square LED LAMP CLUSTER Series

KLS9 - CL - S 15 A R1G2B1- XXX
1 2 3 4 5 6 7

1. Brank: KLS ELECTRONIC
2. Digit Mode: CL-Lamp Cluster
3. Shape: R-Round S-Square
4. Display Unit Dimension and Quantity:
5. Model Number: A. B. C. ... ...
6. Color Code:

H: Red	GaP/GaP		700nm	UG: High Bright Green	AlGaInP		574nm
S: High Bright Red	GaAlAs/GaAs	SH	660nm	PG: Super Pure Green	AlGaInP		525nm
D: Super Bright Red	GaAlAs/GaAs	DH	660nm	BG: Super Bluish Green	AlGaInP		505nm
UR: Ultra Bright Red	GaAlAs/GaAlAs	DDH	660nm	B: Blue GaN/SiC			430nm
UHR: Ultra Bright Red	AlGaInP		640nm	UB: Super Bright Blue	InGaN/SiC		470nm
E: Orange	GaAsP/GaP		635nm	V: UV	InGaN/SiC		405nm
UE: High Bright Orange	AlGaInP		630nm	W: White			
Y: Yellow	GaAsP/GaP		585nm	EG: Orange+Green Bi-Color			
UY: High Bright Yellow	AlGaInP		590nm	SG: High Red+Green Bi-Color			
G: Green	GaP/GaP		568nm	RGB: Multicolor			

7. Special Device:

LED LAMP CLUSTER Series

KLS9-CLS15A 15x15 Square LED LAMP CLUSTER Series

PACKAGE DIMENSION

KLS9-CLS15A Series

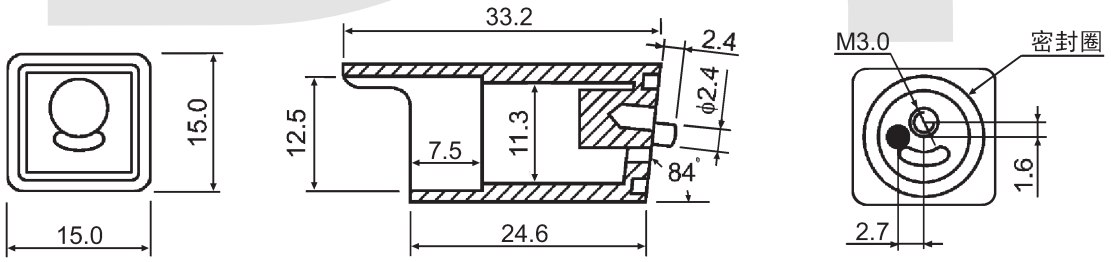

INTERNAL CIRCUIT DIAGRAM

KLS9-CLS15AR2G2

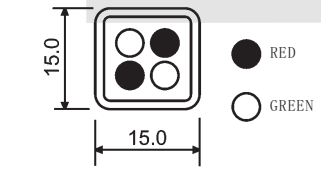

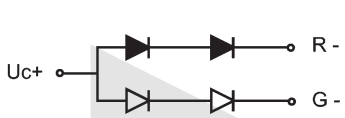

KLS9-CLS15AR1G3

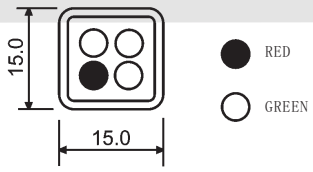

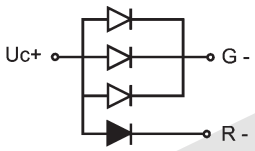

KLS9-CLS15AR1G2B1

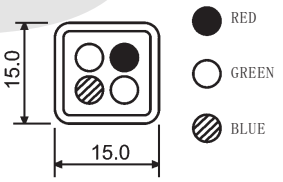

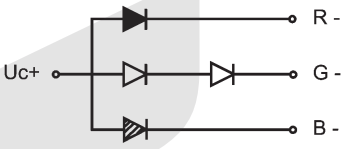

LED LAMP CLUSTER Series

KLS9-CLS19A 19x19 Square LED LAMP CLUSTER Series

KLS9 - CL - S 19 A R1G2B1- XXX
1 2 3 4 5 6 7

1. Brank: KLS ELECTRONIC
2. Digit Mode: CL-Lamp Cluster
3. Shape: R-Round S-Square
4. Display Unit Dimension and Quantity:
5. Model Number: A. B. C. ... ...
6. Color Code:

H: Red	GaP/GaP		700nm	UG: High Bright Green	AlGaInP		574nm
S: High Bright Red	GaAlAs/GaAs	SH	660nm	PG: Super Pure Green	AlGaInP		525nm
D: Super Bright Red	GaAlAs/GaAs	DH	660nm	BG: Super Bluish Green	AlGaInP		505nm
UR: Ultra Bright Red	GaAlAs/GaAlAs	DDH	660nm	B: Blue GaN/SiC			430nm
UHR: Ultra Bright Red	AlGaInP		640nm	UB: Super Bright Blue	InGaN/SiC		470nm
E: Orange	GaAsP/GaP		635nm	V: UV	InGaN/SiC		405nm
UE: High Bright Orange	AlGaInP		630nm	W: White			
Y: Yellow	GaAsP/GaP		585nm	EG: Orange+Green Bi-Color			
UY: High Bright Yellow	AlGaInP		590nm	SG: High Red+Green Bi-Color			
G: Green	GaP/GaP		568nm	RGB: Multicolor			

7. Special Device:

LED LAMP CLUSTER Series

KLS9-CLS19A 19x19 Square LED LAMP CLUSTER Series

PACKAGE DIMENSION

KLS9CL-S19A Series

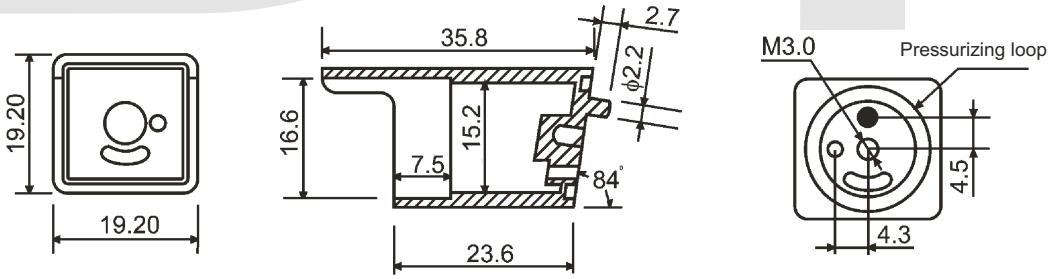

INTERNAL CIRCUIT DIAGRAM

KLS9CL-S19AR2G4

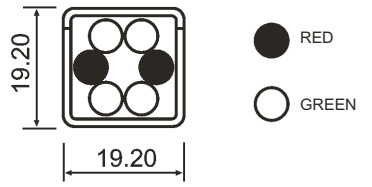

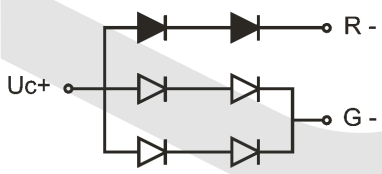

KLS9CL-S19AR3G6

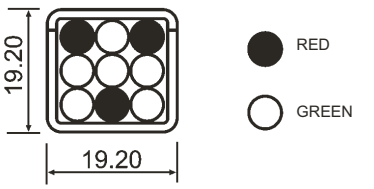

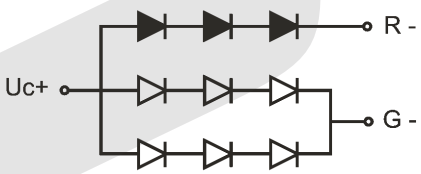

LED LAMP CLUSTER Series

KLS9-CLS21A 21x21 Square LED LAMP CLUSTER Series

KLS9 - CL - S 21 A R1G2B1- XXX
1 2 3 4 5 6 7

1. Brank: KLS ELECTRONIC
2. Digit Mode: CL-Lamp Cluster
3. Shape: R-Round S-Square
4. Display Unit Dimension and Quantity:
5. Model Number: A. B. C. ... ...
6. Color Code:

H: Red	GaP/GaP		700nm	UG: High Bright Green	AlGaInP		574nm
S: High Bright Red	GaAlAs/GaAs	SH	660nm	PG: Super Pure Green	AlGaInP		525nm
D: Super Bright Red	GaAlAs/GaAs	DH	660nm	BG: Super Bluish Green	AlGaInP		505nm
UR: Ultra Bright Red	GaAlAs/GaAlAs	DDH	660nm	B: Blue GaN/SiC			430nm
UHR: Ultra Bright Red	AlGaInP		640nm	UB: Super Bright Blue	InGaN/SiC		470nm
E: Orange	GaAsP/GaP		635nm	V: UV	InGaN/SiC		405nm
UE: High Bright Orange	AlGaInP		630nm	W: White			
Y: Yellow	GaAsP/GaP		585nm	EG: Orange+Green Bi-Color			
UY: High Bright Yellow	AlGaInP		590nm	SG: High Red+Green Bi-Color			
G: Green	GaP/GaP		568nm	RGB: Multicolor			

7. Special Device:

LED LAMP CLUSTER Series

KLS9-CLS21A 21x21 Square LED LAMP CLUSTER Series

PACKAGE DIMENSION

KLS9CL-S21A Series

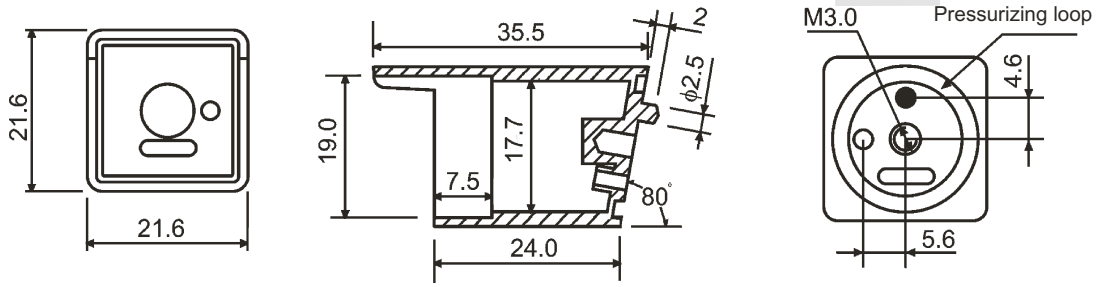

INTERNAL CIRCUIT DIAGRAM

KLS9CL-S21AR3G6

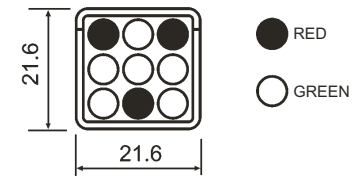

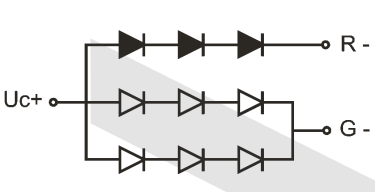

KLS9CL-S21AR2G6B1

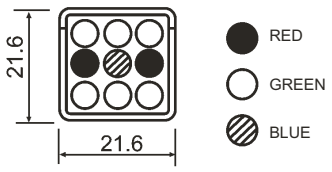

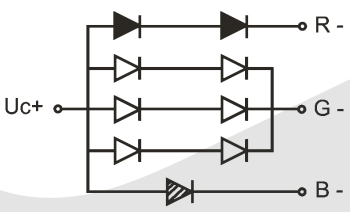

KLS9CL-S21AR2G1B1

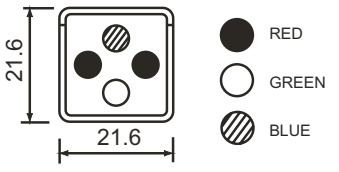

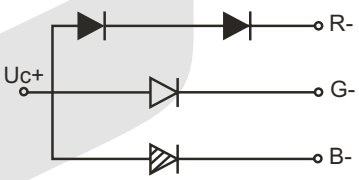

LED LAMP CLUSTER Series

KLS9-CLS26A 26x26 Square LED LAMP CLUSTER Series

KLS9 - CL - S 26 A R1G2B1- XXX
1 2 3 4 5 6 7

1. Brank: KLS ELECTRONIC
2. Digit Mode: CL-Lamp Cluster
3. Shape: R-Round S-Square
4. Display Unit Dimension and Quantity:
5. Model Number: A. B. C. ... ...
6. Color Code:

H: Red	GaP/GaP		700nm	UG: High Bright Green	AlGaInP		574nm
S: High Bright Red	GaAlAs/GaAs	SH	660nm	PG: Super Pure Green	AlGaInP		525nm
D: Super Bright Red	GaAlAs/GaAs	DH	660nm	BG: Super Bluish Green	AlGaInP		505nm
UR: Ultra Bright Red	GaAlAs/GaAlAs	DDH	660nm	B: Blue GaN/SiC			430nm
UHR: Ultra Bright Red	AlGaInP		640nm	UB: Super Bright Blue	InGaN/SiC		470nm
E: Orange	GaAsP/GaP		635nm	V: UV	InGaN/SiC		405nm
UE: High Bright Orange	AlGaInP		630nm	W: White			
Y: Yellow	GaAsP/GaP		585nm	EG: Orange+Green Bi-Color			
UY: High Bright Yellow	AlGaInP		590nm	SG: High Red+Green Bi-Color			
G: Green	GaP/GaP		568nm	RGB: Multicolor			

7. Special Device:

LED LAMP CLUSTER Series

KLS9-CLS26A 26x26 Square LED LAMP CLUSTER Series

PACKAGE DIMENSION

NFCL-S26A Series

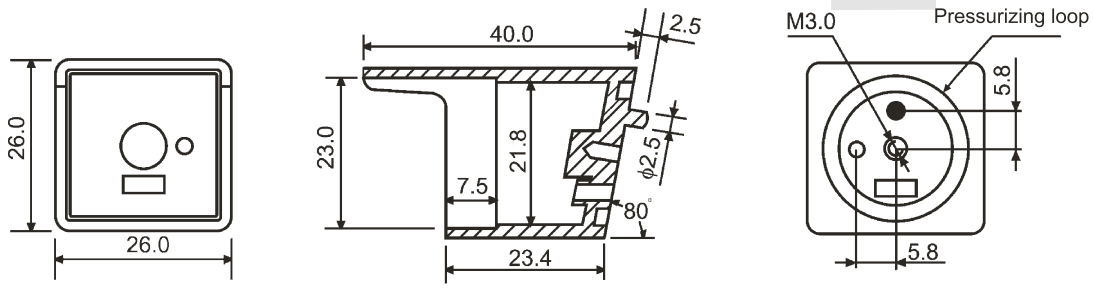

INTERNAL CIRCUIT DIAGRAM

NFCL-S26AR5G8

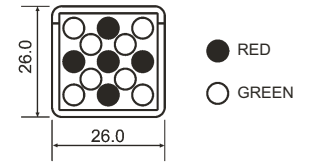

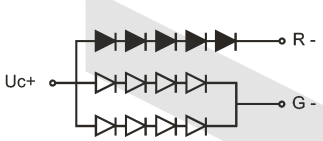

NFCL-S26AR5G12

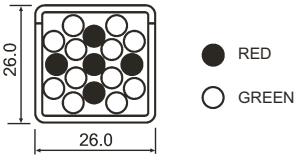

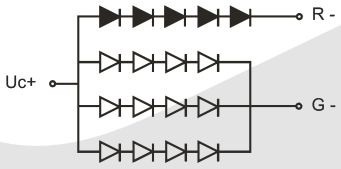

NFCL-S26AR3G3B2

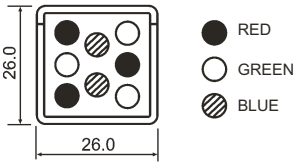

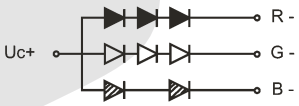

LED LAMP CLUSTER Series

KLS9-CLS28A 28x28 Square LED LAMP CLUSTER Series

KLS9 - CL - S 28 A R1G2B1- XXX
1 2 3 4 5 6 7

1. Brank: KLS ELECTRONIC
2. Digit Mode: CL-Lamp Cluster
3. Shape: R-Round S-Square
4. Display Unit Dimension and Quantity:
5. Model Number: A. B. C. ... ...
6. Color Code:

H: Red	GaP/GaP		700nm	UG: High Bright Green	AlGaInP		574nm
S: High Bright Red	GaAlAs/GaAs	SH	660nm	PG: Super Pure Green	AlGaInP		525nm
D: Super Bright Red	GaAlAs/GaAs	DH	660nm	BG: Super Bluish Green	AlGaInP		505nm
UR: Ultra Bright Red	GaAlAs/GaAlAs	DDH	660nm	B: Blue GaN/SiC			430nm
UHR: Ultra Bright Red	AlGaInP		640nm	UB: Super Bright Blue	InGaN/SiC		470nm
E: Orange	GaAsP/GaP		635nm	V: UV	InGaN/SiC		405nm
UE: High Bright Orange	AlGaInP		630nm	W: White			
Y: Yellow	GaAsP/GaP		585nm	EG: Orange+Green Bi-Color			
UY: High Bright Yellow	AlGaInP		590nm	SG: High Red+Green Bi-Color			
G: Green	GaP/GaP		568nm	RGB: Multicolor			

7. Special Device:

LED LAMP CLUSTER Series

KLS9-CLS28A 28x28 Square LED LAMP CLUSTER Series

PACKAGE DIMENSION

KLS9CL-S28x Series

Spec.	A	B	C	D
S28A	$28.0^{+0.0}_{-0.1}$	25	7	84°
S28B	$28.0^{+0.0}_{-0.1}$	25	10	84°

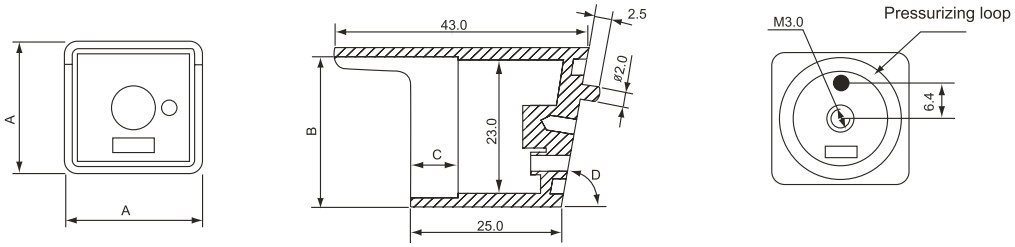

INTERNAL CIRCUIT DIAGRAM

KLS9CL-S28xR3G5B1

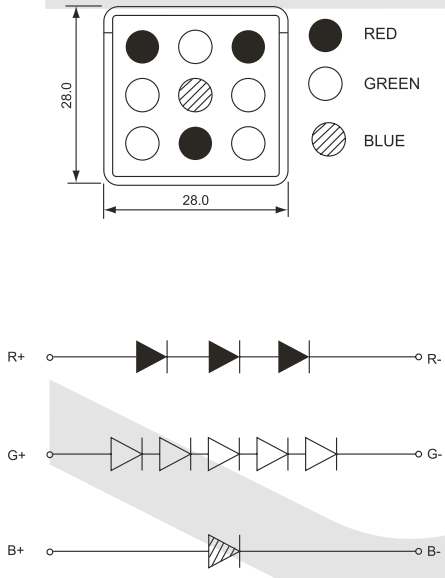

KLS9CL-S28xR4G12

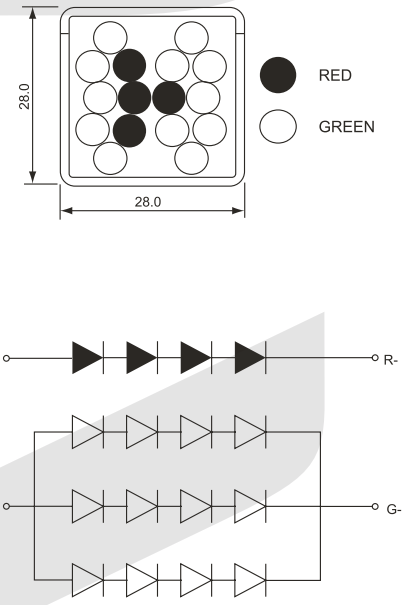

Indicator Lights series

KLS7-IL-M4.5-01A

SPECIFICATIONS

NEON INDICATOR LIGHT Φ 4mm
W Resistor 120V 220V
Mounting Hole: Φ 4.5mm



FUNCTION:
R = Red Lamp
Y = Yellow Lamp
G = Green Lamp

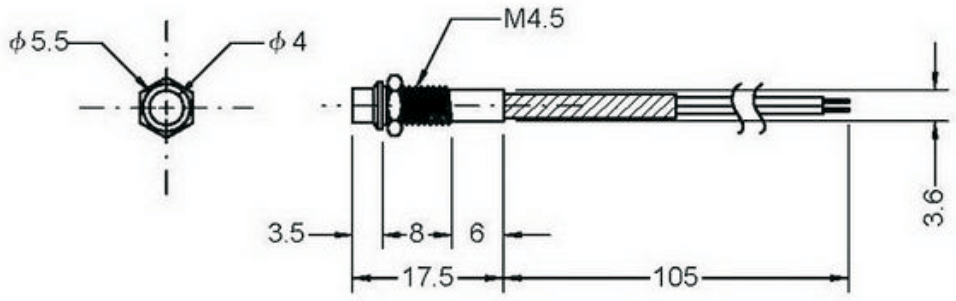

ORDER INFORMATION

Indicator Lights series

KLS7-IL-M5-01A

SPECIFICATIONS

LED INDICATOR LIGHT Φ 6.8mm
W O Resistor 2V DC
Mounting Hole: Φ 5mm



FUNCTION:
R = Red Lamp
Y = Yellow Lamp
G = Green Lamp

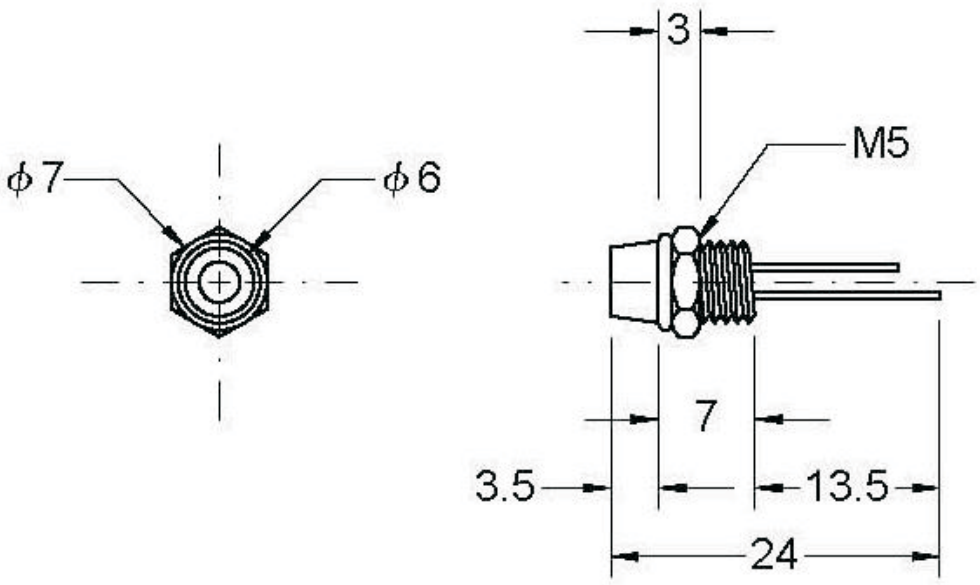

ORDER INFORMATION

Indicator Lights series

KLS7-IL-M6-02A

SPECIFICATIONS

LED INDICATOR LIGHT Φ 8mm
W O Resistor 2V DC
Mounting Hole: Φ 6mm



FUNCTION:
R = Red Lamp
Y = Yellow Lamp
G = Green Lamp

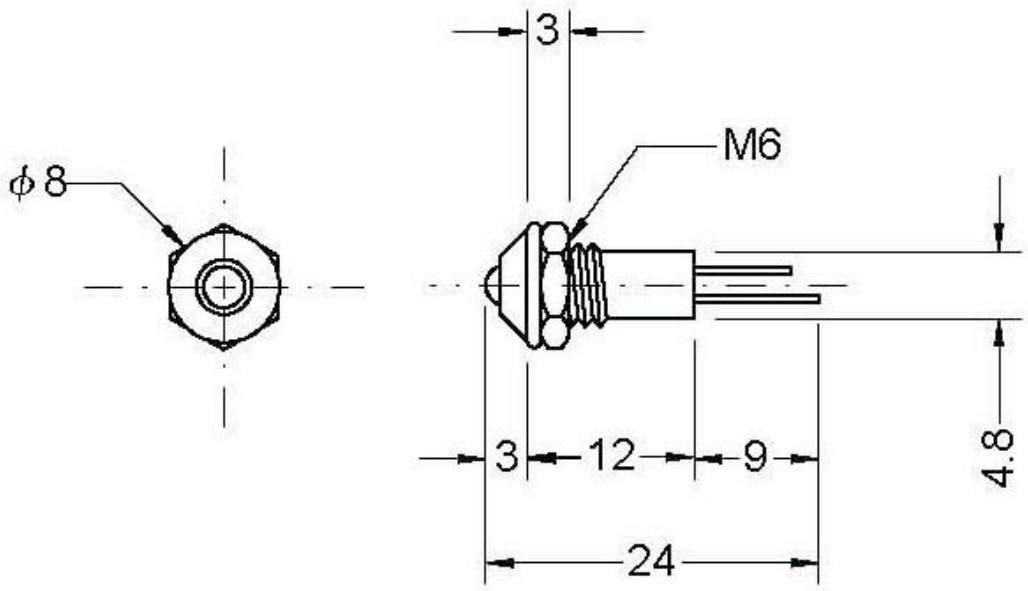

ORDER INFORMATION

Indicator Lights series

KLS7-ILS-M7-01A

SPECIFICATIONS

INDICATOR LIGHT Φ7.5 mm

Mounting Hole: Φ7mm

FUNCTION:

N1-NEON w/resistor 120V 220V
N2-LED w/resistor 6V 12V 24V
N3-PILOT 6V 12V 24V

R = Red Lamp
Y = Yellow Lamp
G = Green Lamp



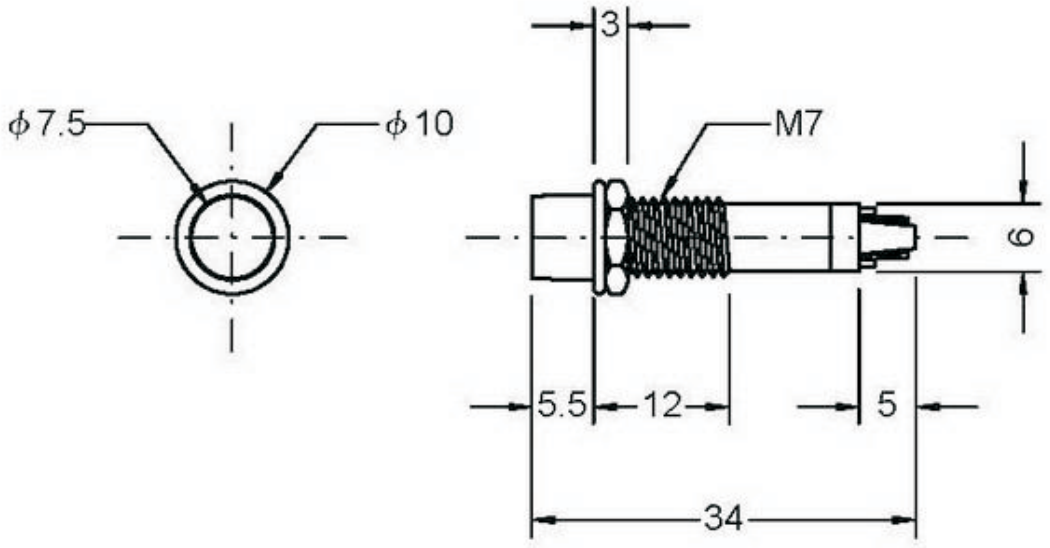

ORDER INFORMATION

Indicator Lights series

VII

KLS7-IL-M8-01A

SPECIFICATIONS

LED INDICATOR LIGHT Φ 10mm
W O Resistor 2V DC
Mounting Hole: Φ 8mm



FUNCTION:
R = Red Lamp
Y = Yellow Lamp
G = Green Lamp

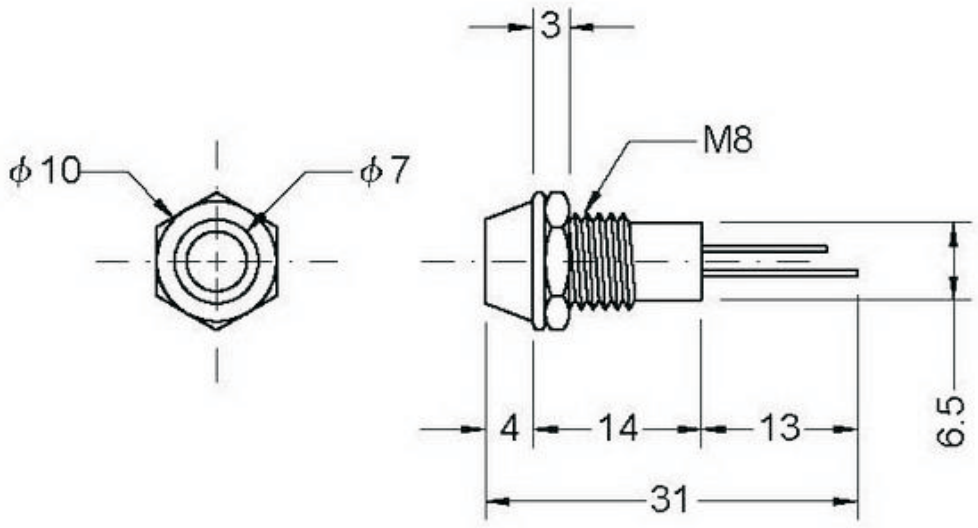

ORDER INFORMATION

Indicator Lights series

KLS7-IL-M8-01B

SPECIFICATIONS

LED INDICATOR LIGHT Φ 10mm
W O Resistor 2V DC
Mounting Hole: Φ 8mm



FUNCTION:
R = Red Lamp
Y = Yellow Lamp
G = Green Lamp

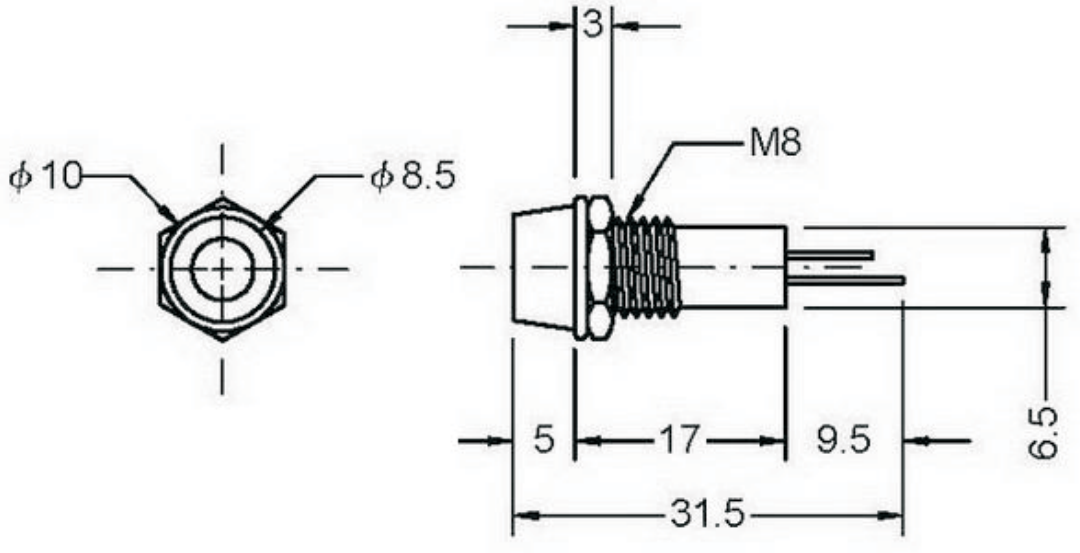

ORDER INFORMATION

Indicator Lights series

VII

KLS7-IL-M8-01C

SPECIFICATIONS

LED INDICATOR LIGHT Φ 10mm
W O Resistor 2V DC
Mounting Hole: Φ 8mm
Lamp = Red & Green



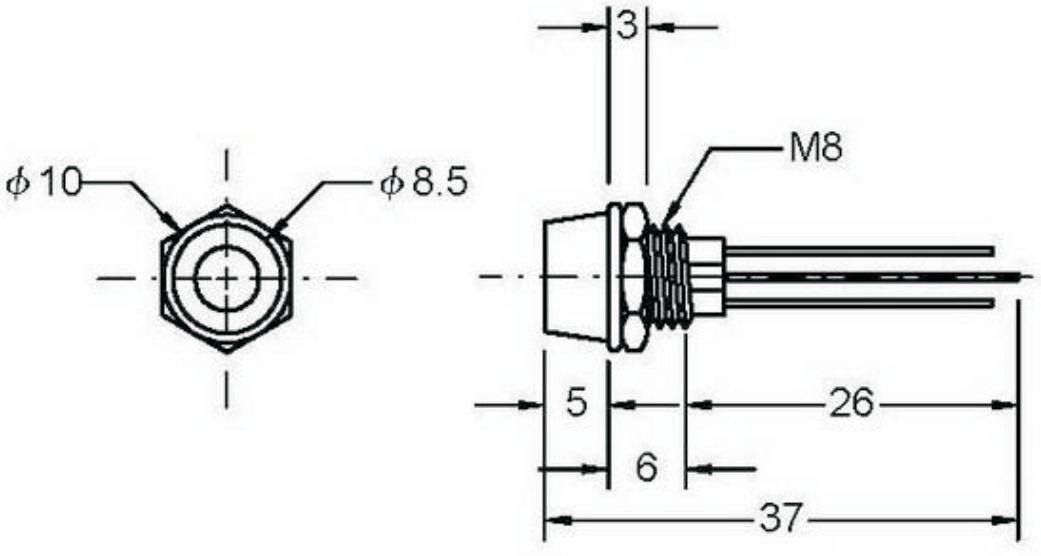

ORDER INFORMATION

Indicator Lights series

KLS7-IL-M8-02A

SPECIFICATIONS

LED INDICATOR LIGHT Φ10mm
W O Resistor 2V DC
Mounting Hole: Φ8mm



FUNCTION:
R = Red Lamp
Y = Yellow Lamp
G = Green Lamp

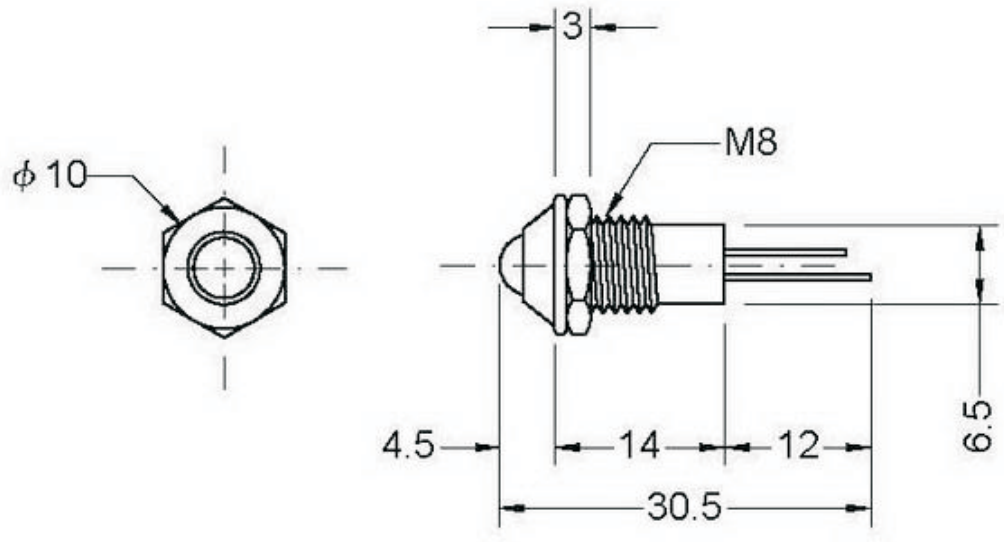

ORDER INFORMATION

Indicator Lights series

VII

KLS7-IL-M8-03A

SPECIFICATIONS

LED INDICATOR LIGHT Φ10mm
Mounting Hole: Φ8mm

FUNCTION:

N1-NEON w/resistor 120V 220V
N2-LED w/resistor 6V 12V 24V
N3-PILOT 6V 12V 24V
R = Red Lamp
Y = Yellow Lamp
G = Green Lamp



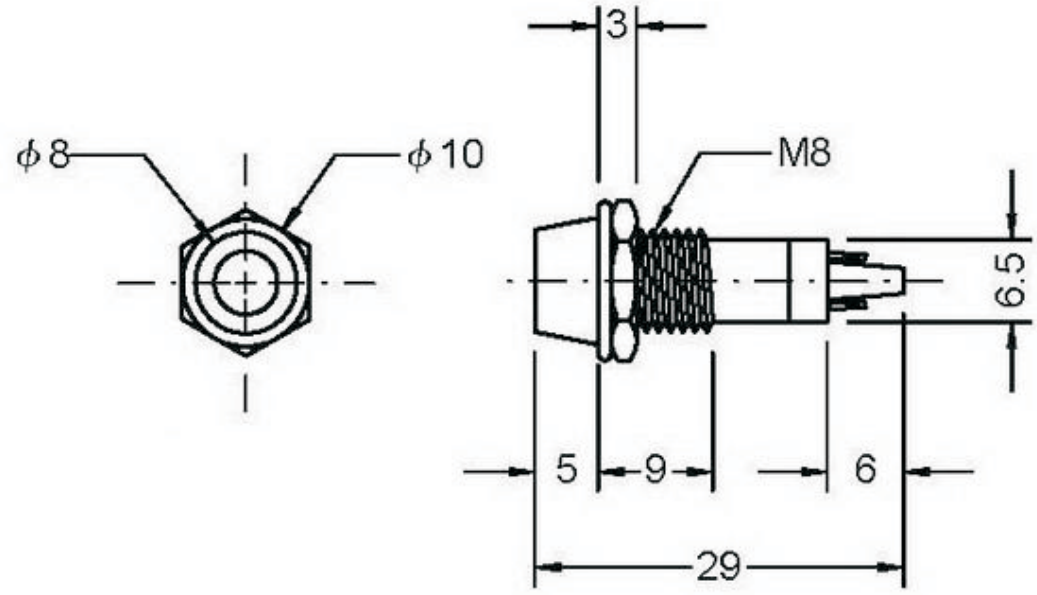

ORDER INFORMATION

Indicator Lights series

KLS7-IL-M8-03B

SPECIFICATIONS

INDICATOR LIGHT Φ 10mm
Mounting Hole: Φ8mm

FUNCTION:

N1-NEON w/resistor 120V 220V
N2-LED w/resistor 6V 12V 24V
N3-PILOT 6V 12V 24V
R = Red Lamp
Y = Yellow Lamp
G = Green Lamp



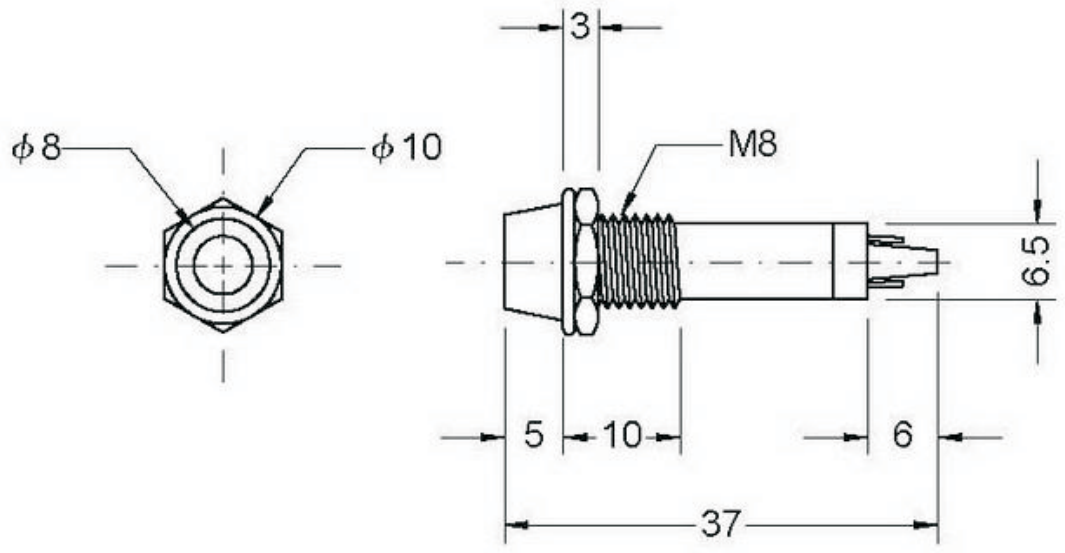

ORDER INFORMATION

Indicator Lights series

KLS7-IL-M8-04A

SPECIFICATIONS

INDICATOR LIGHT Φ 9.5mm
Mounting Hole: Φ8mm

FUNCTION:

N1-NEON w/resistor 120V 220V
N2-LED w/resistor 6V 12V 24V
N3-PILOT 6V 12V 24V
R = Red Lamp
Y = Yellow Lamp
G = Green Lamp



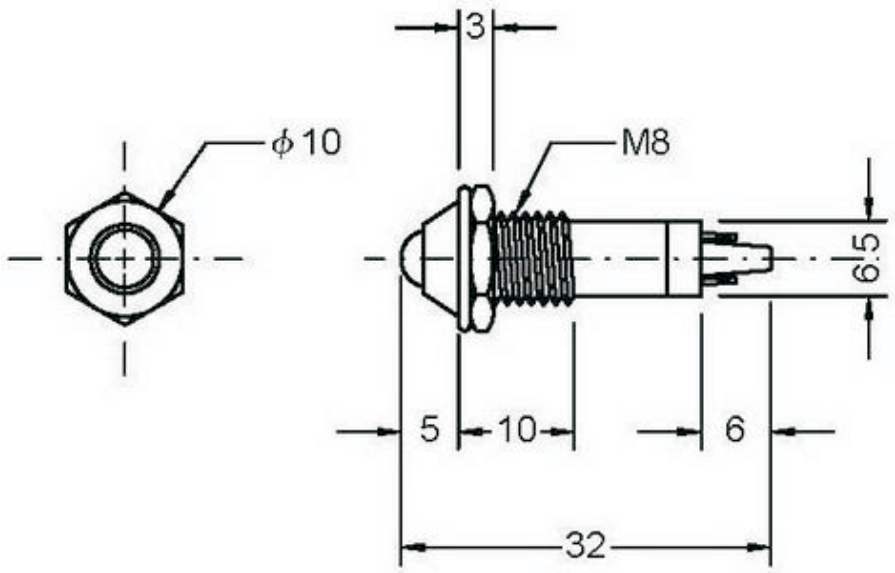

ORDER INFORMATION

Indicator Lights series

VII

KLS7-IL-M8-04B

SPECIFICATIONS

INDICATOR LIGHT Φ 9.5mm
Mounting Hole: Φ8mm

FUNCTION:

N1-NEON w/resistor 120V 220V
N2-LED w/resistor 6V 12V 24V
N3-PILOT 6V 12V 24V
R = Red Lamp
Y = Yellow Lamp
G = Green Lamp



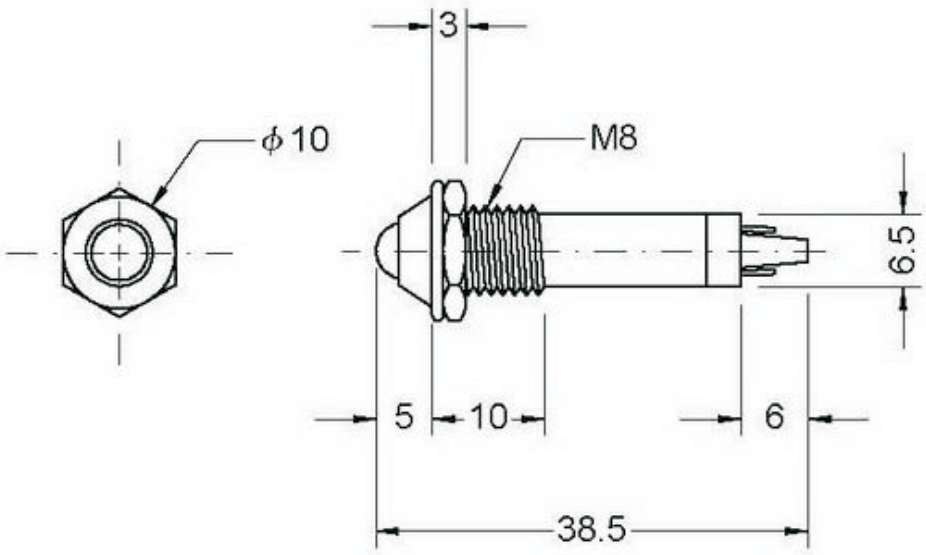

ORDER INFORMATION

Indicator Lights series

KLS7-IL-M9-03A

SPECIFICATIONS

INDICATOR LIGHT Φ11mm

Mounting Hole: Φ9mm

FUNCTION:

N1-NEON w/resistor 120V 220V
N2-LED w/resistor 6V 12V 24V

N3-PILOT 6V 12V 24V
R = Red Lamp
Y = Yellow Lamp
G = Green Lamp



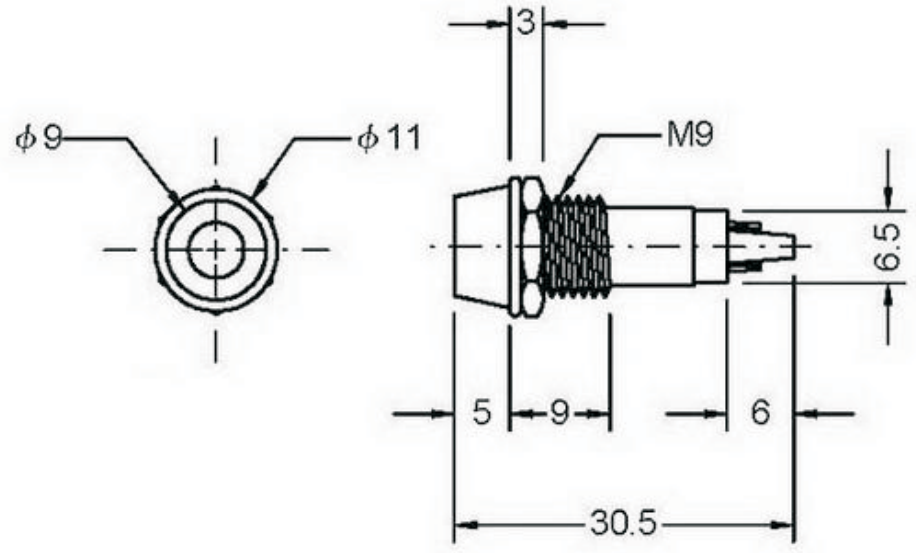

ORDER INFORMATION

Indicator Lights series

KLS7-IL-M9-03B

SPECIFICATIONS

INDICATOR LIGHT Φ11mm

Mounting Hole: Φ9mm

FUNCTION:

N1-NEON w/resistor 120V 220V
N2-LED w/resistor 6V 12V 24V
N3-PILOT 6V 12V 24V
R = Red Lamp
Y = Yellow Lamp
G = Green Lamp



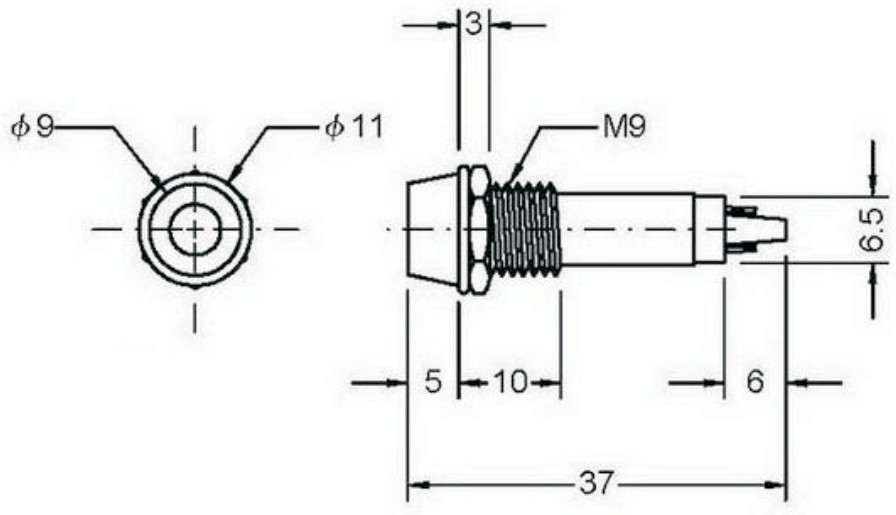

ORDER INFORMATION

Indicator Lights series

KLS7-ILS-M10-01A

SPECIFICATIONS

INDICATOR LIGHT Φ12.5 mm

Mounting Hole: Φ10mm

FUNCTION:

N1-NEON w/resistor 120V 220V
N2-LED w/resistor 6V 12V 24V

R = Red Lamp
Y = Yellow Lamp
G = Green Lamp



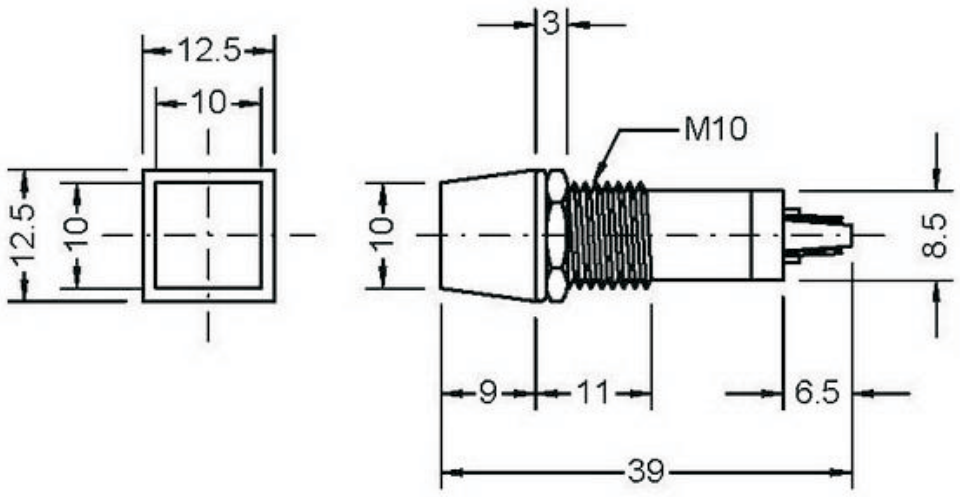

ORDER INFORMATION

Indicator Lights series

KLS7-ILS-M10-02A

SPECIFICATIONS

INDICATOR LIGHT Φ13 mm

Mounting Hole: Φ10mm

FUNCTION:

N1-NEON w/resistor 120V 220V
N3-PILOT 6V 12V 24V

R = Red Lamp
Y = Yellow Lamp
G = Green Lamp



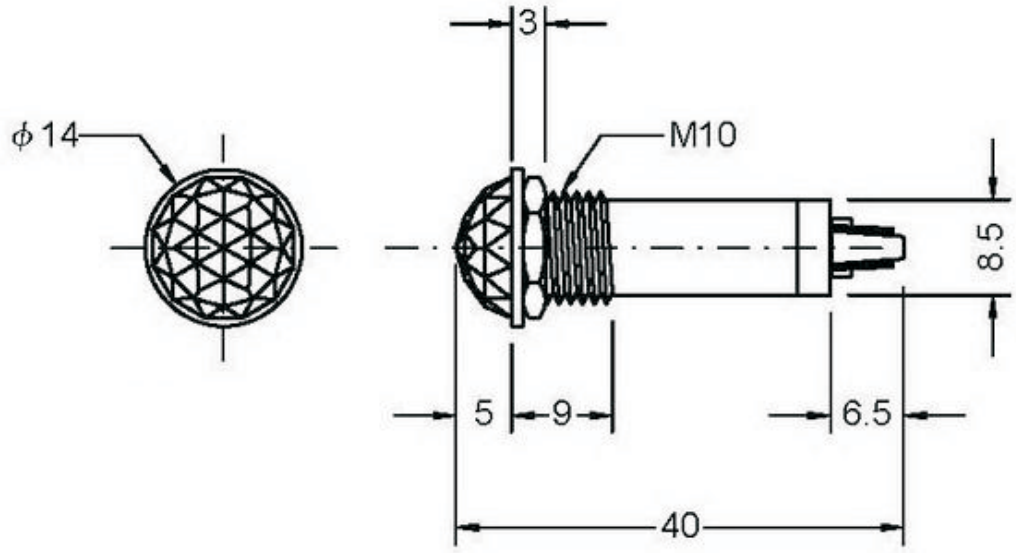

ORDER INFORMATION

Indicator Lights series

KLS7-IL-M11-01A

SPECIFICATIONS

INDICATOR LIGHT Φ11.5 mm

Mounting Hole: Φ11mm

FUNCTION:

N1-NEON w/resistor 120V 220V
N2-LED w/resistor 6V 12V 24V

R = Red Lamp
Y = Yellow Lamp
G = Green Lamp



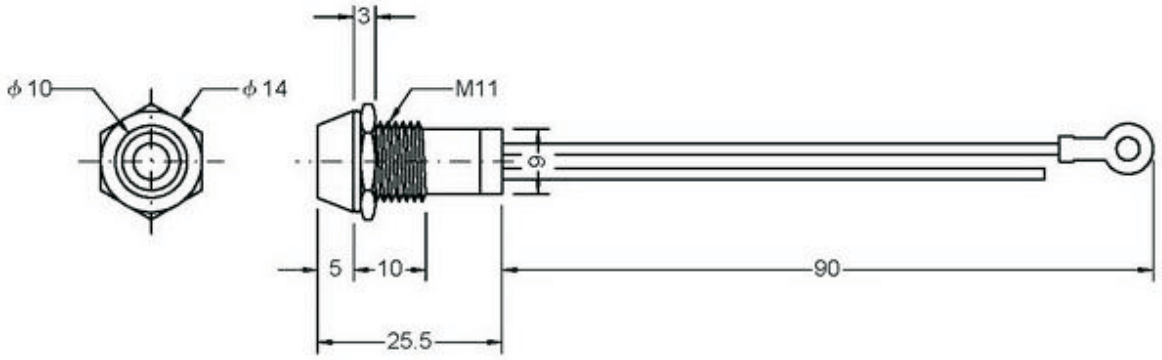

ORDER INFORMATION

Indicator Lights series

KLS7-ILS-K13-01A

SPECIFICATIONS

INDICATOR LIGHT Φ12.5mm
Mounting Hole: Φ13mm

FUNCTION:
N1-NEON w/resistor 120V 220V
N2-LED w/resistor 6V 12V 24V
N3-PILOT 6V 12V 24V

R = Red Lamp
Y = Yellow Lamp
G = Green Lamp



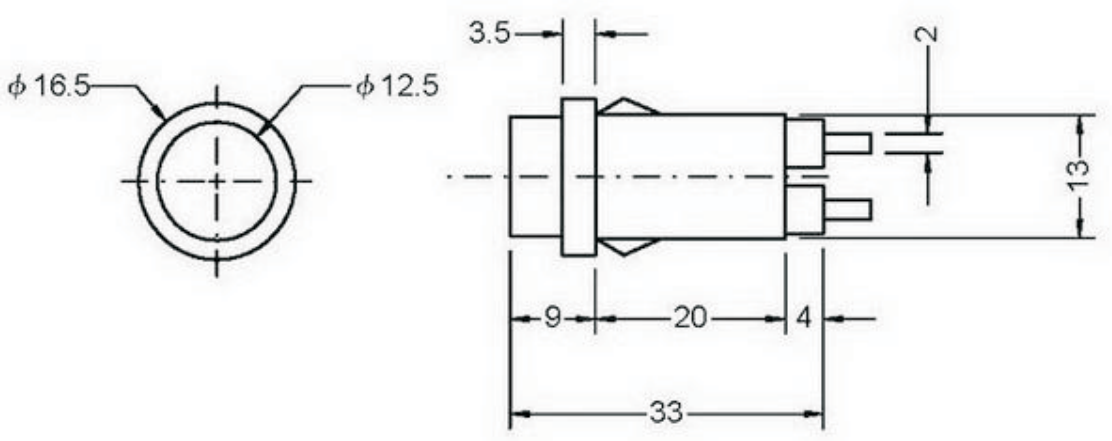

ORDER INFORMATION

Indicator Lights series

KLS7-ILS-K13-01B

SPECIFICATIONS

INDICATOR LIGHT Φ12.5mm
Mounting Hole: Φ13mm

FUNCTION:
N1-NEON w/resistor 120V 220V
N2-LED w/resistor 6V 12V 24V
N3-PILOT 6V 12V 24V

R = Red Lamp
Y = Yellow Lamp
G = Green Lamp



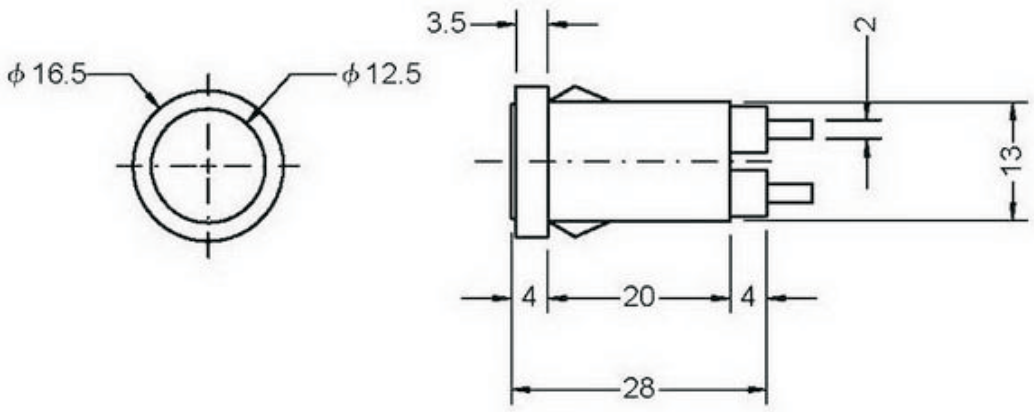

ORDER INFORMATION

Indicator Lights series

KLS7-ILS-M11-01A

SPECIFICATIONS

E-5 Screw Base
INDICATOR LIGHT Φ13 mm
Mounting Hole: Φ11mm

R = Red Lamp
Y = Yellow Lamp
G = Green Lamp



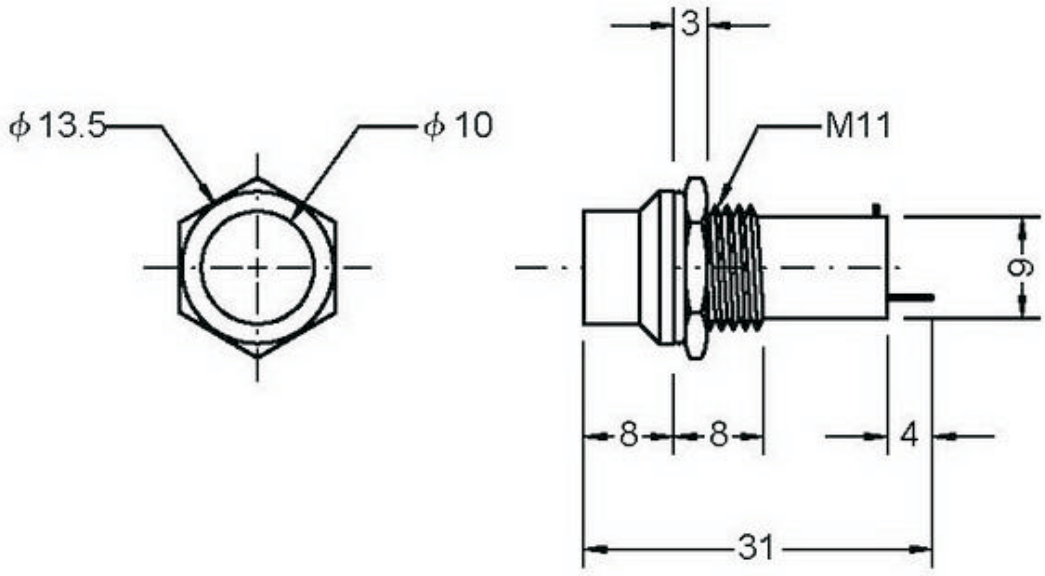

ORDER INFORMATION

Indicator Lights series

KLS7-ILS-M16-01A

SPECIFICATIONS

E-10 Screw Base
INDICATOR LIGHT Φ14mm
Mounting Hole: Φ16mm

R = Red Lamp
Y = Yellow Lamp
G = Green Lamp



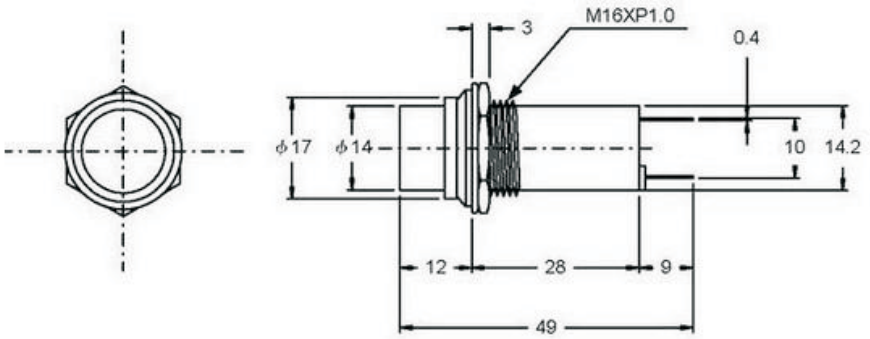

ORDER INFORMATION

KLS

8-Cable, Wire & Assemblies-Провода и кабели и сборка

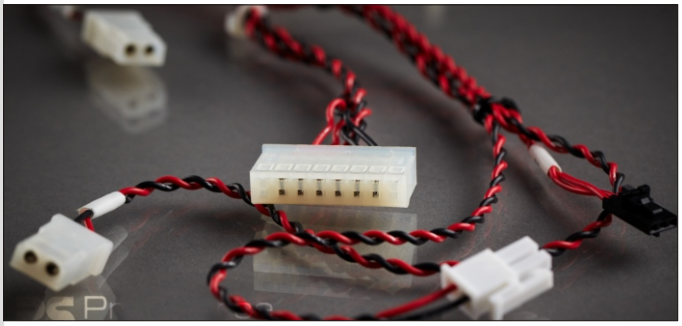

8-1 Ribbon cable
8-2 Ribbon cable assemblies
8-3 Wire Harness
8-4 Input/Output cable assemblies
8-5 Coaxial Cable assembly
8-6 International AC Power cords

More . . .

UL2678 Flat Cable Series

KLS17-0635-FC Series

Product Description
UL STYLE: 2678
Rate temperature : 105°C
Rate voltage : 150V
Passes UL VW-1 & CSA Standard : C22.2 No. 210.2
Flame test : FT1,FT2
Solid or stranded ,tinned or bare copper conductor 30AWG
PVC insulation , comply with ROHS environmental standard
Uniform insulation thickness to ensure easy stripping and cutting
For general purpose internal wiring of appliance



CONDUCTOR : Solid
AWG size : 30AWG
Number of strands in each conductor : 7/0.102mm.
Lay of strands in each conductor : 0.5 inch at least
Cross section area : 98mil.

INSULATION :
Mater ial of insulation : polyvinyl chlor ide(PVC)gray
Insulation thickness average : 7mil.
Minimum insulation thickness : 6mil.

PHYSICAL PROPERTIES : After 7 days air oven at 136°C
Average tensile strength : 1500 lbs/
Percent of or iginal : 70% at least
Average elongation : 200%
Percent of or iginal : 65% at least

ELECTRONIC CHARACTERISTICS :
Spark test : 2500V
Dielectric strength test : Minimum 2 KV in 1 minute
Conductor resistance : Maximum 377Ω /km
Insulation resistance : Minimum 1GΩ-km
Capacity : 75pF/m(G-S-G) 49pF/m(G-S)
Inductance : 1.45μH/m
Character istic Impedance : 72Ω(G-S-G) 113Ω(G-S)
Propagation delay time : 5. 4ns/m

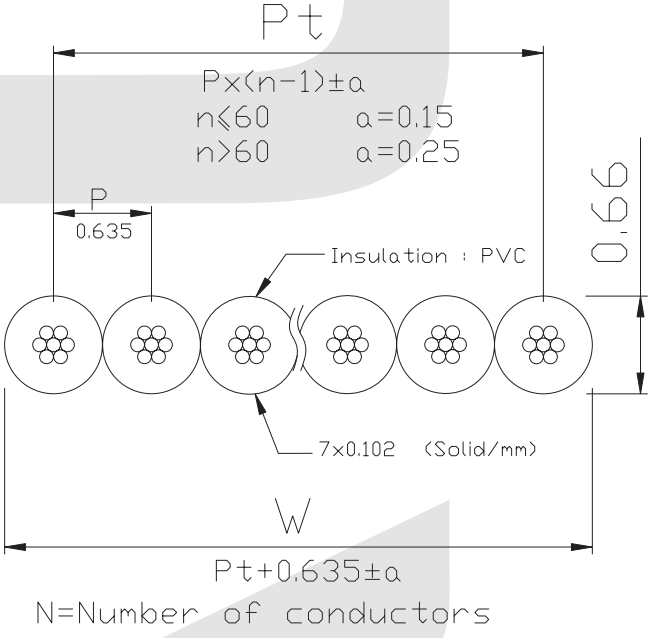

ORDER INFORMATION

Product NO.: KLS17-0635-FC-XX-5

Part Number	Pitch	Pin Number	Long / Reel
	0635:Pitch 0.635mm	XX:68~100Pin	5-200M/Reel

UL2678 Flat Cable Series

Code No.	Number of Cores	Size of conductor			Thic kness (mm 0.05)	Width (mm)	PT (mm)	Allowable error (mm)
		AWG	Composition (solid/mm)					
			Stranded Conductor	Solid Conductor				
FC-68	68	30	7/0.102	0.254	0.66	43.18 (1.7 0.01)	42.545 (1.675 0.01)	0.25
FC-80	80	30	7/0.102	0.254	0.66	50.80 (2.0 0.01)	50.165 (1.975 0.01)	0.25
FC-100	100	30	7/0.102	0.254	0.66	63.50 (2.5 0.01)	62.865 (2.475 0.01)	0.25

ORDER INFORMATION

Product NO.: KLS17-0635-FC-XX-5

Part Number	Pitch	Pin Number	Long / Reel
	0635:Pitch 0.635mm	XX:68~100Pin	5-200M/Reel

UL20674 Flat Cable Series

KLS17-0635-FCT Series

Product Description
UL STYLE: 20674
Rate temperature : 105°C
Rate voltage : 150V
Passes UL VW-1 & CSA Standard : C22.2 No. 210.2
Flame test : FT1,FT2
Solid or stranded ,tinned or bare copper conductor 30AWG
PVC insulation , comply with ROHS environmental standard
Uniform insulation thickness to ensure easy stripping and cutting
For general purpose internal wiring of appliance

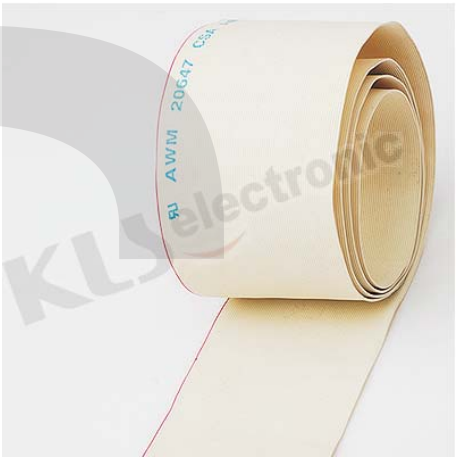

CONDUCTOR : Solid
AWG size : 30AWG
Number of strands in each conductor : 7/0.102mm.
Lay of strands in each conductor : 0.5 inch at least
Cross section area : 98mil.

INSULATION :
Mater ial of insulation : polyvinyl chlor ide(PVC)gray
Insulation thickness average : 7mil.
Minimum insulation thickness : 6mil.

PHYSICAL PROPERTIES : After 7 days air oven at 136°C
Average tensile strength : 1500 lbs/
Percent of or iginal : 70% at least
Average elongation : 200%
Percent of or iginal : 65% at least

ELECTRONIC CHARACTERISTICS :
Spark test : 2500V
Dielectric strength test : Minimum 2 KV in 1 minute
Conductor resistance : Maximum 377Ω /km
Insulation resistance : Minimum 1GΩ-km
Capacity : 52pF/m(G-S-G) 29pF/m(G-S)
Inductance : 1.45μH/m
Character istic Impedance : 82Ω(G-S-G) 122Ω(G-S)
Propagation delay time : 5. 4ns/m

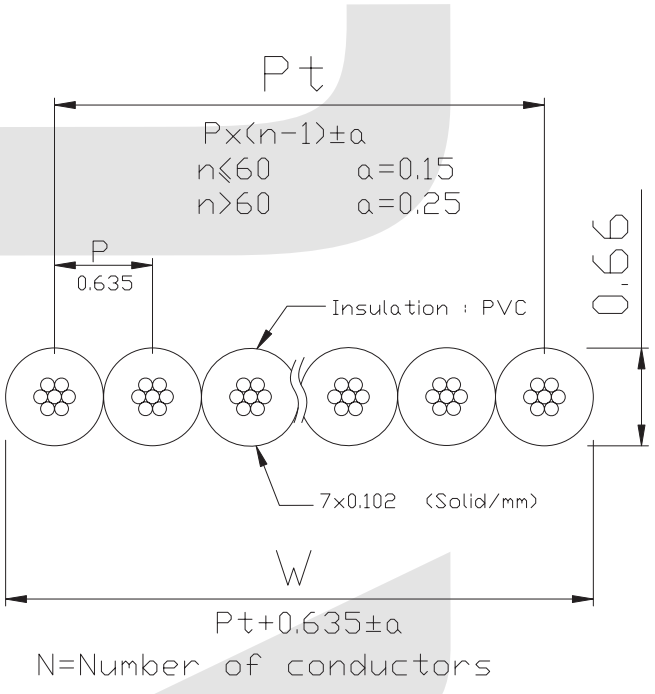

ORDER INFORMATION

Product NO.: KLS17-0635-FCT-XX - 5

Part Number	Pin Number XX:68~100Pin	Long / Reel 5-200M/Reel

UL20674 Flat Cable Series

Code No.	Number of Cores	Size of conductor			Thic kness (mm 0.05)	Width (mm)	PT (mm)	Allowable error (mm)
		AWG	Composition (solid/mm)					
			Stranded Conductor	Solid Conductor				
FCT-68	68	30	7/0.102	0.254	0.66	43.18 (1.7 0.01)	42.545 (1.675 0.01)	0.25
FCT-80	80	30	7/0.102	0.254	0.66	50.80 (2.0 0.01)	50.165 (1.975 0.01)	0.25
FCT-100	100	30	7/0.102	0.254	0.66	63.50 (2.5 0.01)	62.865 (2.475 0.01)	0.25

ORDER INFORMATION

Product NO.: KLS17-0635-FCT-XX - 5

- KLS17-0635-FCT: Part Number
- XX: Pin Number, XX:68~100Pin
- 5: Long / Reel, 5-200M/Reel

UL2651 Flat Cable Series

KLS17-100-FC Series



Product Description
UL STYLE: 2651
Rate temperature : 105°C
Rate voltage : 300V
Passes UL VW-1 & CSA Standard : C22.2 No. 210.2
Flame test : FT1,FT2
Solid or stranded ,tinned or bare copper conductor 26~24AWG
PVC insulation , comply with ROHS environmental standard
Uniform insulation thickness to ensure easy stripping and cutting
For general purpose internal wiring of appliance

CONDUCTOR : Solid
AWG size : 28AWG
Number of strands in each conductor : 7/0.127mm.
Lay of strands in each conductor : 0.5 inch at least
Cross section area : 156mil.

INSULATION :
Mater ial of insulation : polyvinyl chlor ide(PVC)gray
Insulation thickness average : 9mil.
Minimum insulation thickness : 7mil.

PHYSICAL PROPERTIES : After 7 days air oven at 136°C
Average tensile strength : 1500 lbs/
Percent of or iginal : 70% at least
Average elongation : 200%
Percent of or iginal : 65% at least

ELECTRONIC CHARACTERISTICS :
Spark test : 2500V
Dielectric strength test : Minimum 2 KV in 1 minute
Conductor resistance : Maximum 237Ω /km
Insulation resistance : Minimum 100 MΩ-km
Capacity : 56pF/m (G-S-G)
Inductance : 1.45μH/m
Character istic Impedance : 90Ω (G-S-G)
Propagation delay time : 4. 65ns/m

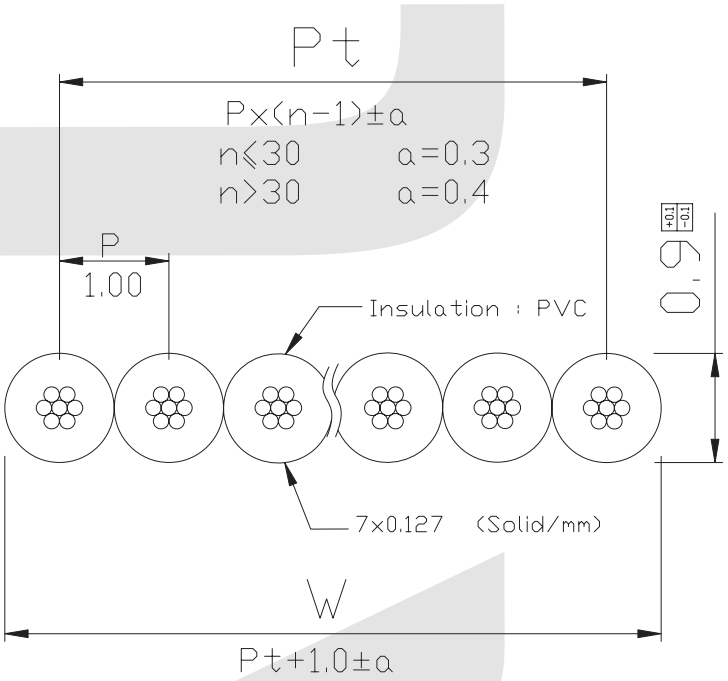

ORDER INFORMATION

Product NO.: KLS17-100-FC-XX-1

Part Number	Pitch	Pin Number	Long / Reel
	100:Pitch1.0mm	XX:08~44Pin	1-30.5M/Reel 2-76.5M/Reel 3-153M/Reel 4-306M/Reel

UL2651 Flat Cable Series

Code No.	Number of Cores	Size of conductor		Thic kness (mm 0.05)	Width (mm)	Allowable error (mm)
		AWG	Composition (solid/mm)			
FC-10	10	28	7/0.127	0.9	10	0.20
FC-12	12	28	7/0.127	0.9	12	0.20
FC-14	14	28	7/0.127	0.9	14	0.20
FC-15	15	28	7/0.127	0.9	15	0.20
FC-16	16	28	7/0.127	0.9	16	0.20
FC-20	20	28	7/0.127	0.9	20	0.30
FC-25	25	28	7/0.127	0.9	25	0.30
FC-26	26	28	7/0.127	0.9	26	0.30
FC-34	34	28	7/0.127	0.9	34	0.40
FC-40	40	28	7/0.127	0.9	40	0.40
FC-44	44	28	7/0.127	0.9	44	0.40

ORDER INFORMATION

Product NO.: KLS17-100-FC-XX-1

Part Number	Pitch	Pin Number	Long / Reel
	100:Pitch1.0mm	XX:08~44Pin	1-30.5M/Reel 2-76.5M/Reel 3-153M/Reel 4-306M/Reel

UL2651 Flat Cable Series

KLS17-127-FC Series



Product Description
UL STYLE: 2651
Rate temperature : 105°C
Rate voltage : 300V
Passes UL VW-1 & CSA Standard : C22.2 No. 210.2
Flame test : FT1,FT2
Solid or stranded ,tinned or bare copper conductor 26~24AWG
PVC insulation , comply with ROHS environmental standard
Uniform insulation thickness to ensure easy stripping and cutting
For general purpose internal wiring of appliance

PHYSICAL PROPERTIES : After 7 days air oven at 136°C
Average tensile strength : 1500 lbs/
Percent of or iginal : 70% at least
Average elongation : 200%
Percent of or iginal : 65% at least

ELECTRONIC CHARACTERISTICS :
Spark test : 2500V
Dielectric strength test : Minimum 2 KV in 1 minute
Conductor resistance : Maximum 237Ω/km
Insulation resistance : Minimum 100 MΩ-km
Capacity : 44pF/m (G-S-G)
Inductance : 1.45μH/m
Character istic Impedance : 105Ω (G-S-G)
Propagation delay time : 4.2 ns/m

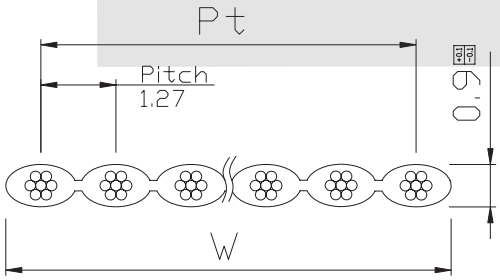

AWG size : 28 AWG
Mater ial of insulation : polyvinyl chlor ide(PVC) gray
Insulation thickness average : 9mil.
Minimum insulation thickness : 7mil

ORDER INFORMATION

Product NO.: KLS17-127-FC-XX - 1

Part Number	Pin Number	Long / Reel
	XX:09~64Pin	1-30.5M/Reel 2-76.5M/Reel 3-153M/Reel 4-306M/Reel

UL2651 Flat Cable Series

Code No.	Number of Cores	Size of conductor		Thic kness (mm 0.05)	Width (mm)	Allowable error (mm)
		AWG	Composition (solid/mm)			
FC-09	9	28	7/0.127	0.9	11.43	0.30
FC-10	10	28	7/0.127	0.9	12.7	0.30
FC-14	14	28	7/0.127	0.9	17.78	0.30
FC-15	15	28	7/0.127	0.9	19.05	0.30
FC-16	16	28	7/0.127	0.9	20.32	0.30
FC-20	20	28	7/0.127	0.9	25.4	0.30
FC-25	25	28	7/0.127	0.9	31.75	0.30
FC-26	26	28	7/0.127	0.9	33.02	0.30
FC-30	30	28	7/0.127	0.9	38.1	0.30
FC-34	34	28	7/0.127	0.9	43.18	0.40
FC-36	36	28	7/0.127	0.9	45.72	0.40
FC-40	40	28	7/0.127	0.9	50.8	0.40
FC-50	50	28	7/0.127	0.9	63.5	0.40
FC-60	60	28	7/0.127	0.9	76.2	0.40
FC-64	64	28	7/0.127	0.9	81.28	0.40

ORDER INFORMATION

Product NO.: KLS17-127-FC-XX - 1

- KLS17-127-FC: Part Number
- XX: Pin Number, XX:09~64Pin
- 1: Long / Reel
  - 1-30.5M/Reel
  - 2-76.5M/Reel
  - 3-153M/Reel
  - 4-306M/Reel

UL2651 Flat Cable Series

KLS17-200-FC Series



Product Description
UL STYLE: 2651
Rate temperature : 105°C
Rate voltage : 300V
Passes UL VW-1 & CSA Standard : C22.2 No. 210.2
Flame test : FT1,FT2
Solid or stranded ,tinned or bare copper conductor 26~24AWG
PVC insulation , comply with ROHS environmental standard
Uniform insulation thickness to ensure easy stripping and cutting
For general purpose internal wiring of appliance

CONDUCTOR : Solid
AWG size : 26AWG
Number of strands in each conductor : 7/0.16mm.
Lay of strands in each conductor : 0.6 inch at least
Cross section area : 253mil.

INSULATION :
Mater ial of insulation : polyvinyl chlor ide(PVC)gray
Insulation thickness average : 9mil.
Minimum insulation thickness : 7mil.

PHYSICAL PROPERTIES : After 7 days air oven at 136°C
Average tensile strength : 1500 lbs/
Percent of or iginal : 70% at least
Average elongation : 200%
Percent of or iginal : 65% at least

ELECTRONIC CHARACTERISTICS :
Spark test : 2500V
Dielectric strength test : Minimum 2 KV in 1 minute
Conductor resistance : Maximum 143Ω/km
Insulation resistance : Minimum 100 MΩ-km
Capacity : 32pF/m (G-S-G)
Inductance : 1.45μH/m
Character istic Impedance : 123Ω (G-S-G)
Propagation delay time : 3.7ns/m

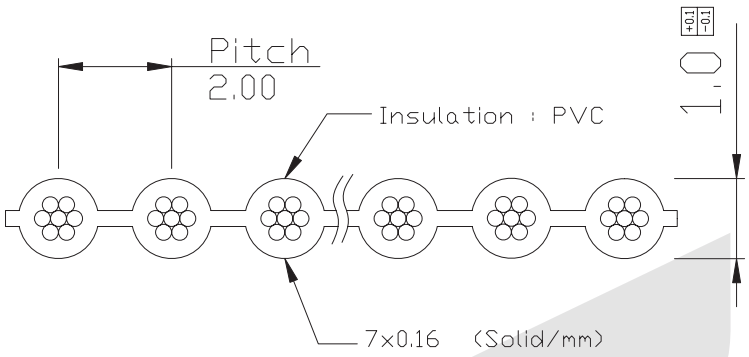

ORDER INFORMATION

Product NO.: KLS17-200-FC-XX - 2

Part Number	Pin Number XX:08~40Pin	Long / Reel 2-76.5M/Reel 3-153M/Reel

UL2651 Flat Cable Series

Code No.	Number of Cores	Size of conductor		Thic kness (mm 0.05)	Width (mm)	Allowable error (mm)
		AWG	Composition (solid/mm)			
FC-8	8	26	7/0.16	1	16	0.30
FC-9	9	26	7/0.16	1	18	0.30
FC-10	10	26	7/0.16	1	20	0.30
FC-11	11	26	7/0.16	1	24	0.30
FC-12	12	26	7/0.16	1	26	0.3
FC-13	13	26	7/0.16	1	28	0.30
FC-15	15	26	7/0.16	1	30	0.30
FC-16	16	26	7/0.16	1	32	0.30
FC-18	18	26	7/0.16	1	36	0.30
FC-20	20	26	7/0.16	1	40	0.40
FC-22	22	26	7/0.16	1	44	0.40
FC-24	24	26	7/0.16	1	48	0.40
FC-26	26	26	7/0.16	1	52	0.40
FC-28	28	26	7/0.16	1	56	0.40
FC-30	30	26	7/0.16	1	60	0.40
FC-32	32	26	7/0.16	1	64	0.40
FC-34	34	26	7/0.16	1	68	0.40
FC-36	36	26	7/0.16	1	72	0.50
FC-38	38	26	7/0.16	1	76	0.50
FC-40	40	26	7/0.16	1	80	0.50

ORDER INFORMATION

Product NO.: KLS17-200-FC-XX - 2

- KLS17-200-FC: Part Number
- XX: Pin Number, XX:08~40Pin
- 2: Long / Reel, 2-76.5M/Reel, 3-153M/Reel

UL2651 Flat Cable Series

KLS17-254-FC Series

Product Description
UL STYLE: 2651
Rate temperature : 105°C
Rate voltage : 300V
Passes UL VW-1 & CSA Standard : C22.2 No. 210.2
Flame test : FT1,FT2
Solid or stranded ,tinned or bare copper conductor 26~24AWG
PVC insulation , comply with ROHS environmental standard
Uniform insulation thickness to ensure easy stripping and cutting
For general purpose internal wiring of appliance

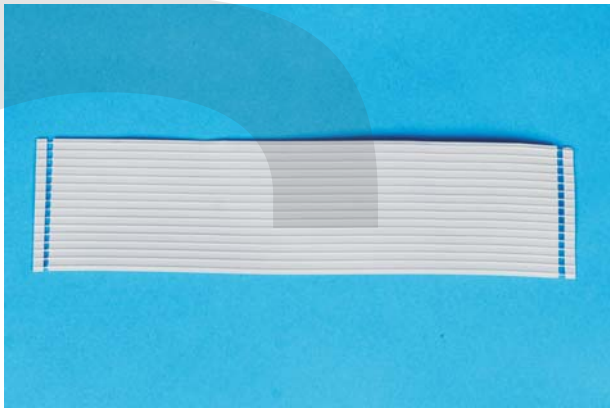

CONDUCTOR : Solid
AWG size : 26AWG
Number of strands in each conductor : 7/0.16mm.
Lay of strands in each conductor : 0.6 inch at least
Cross section area : 253mil.

INSULATION :
Mater ial of insulation : polyvinyl chlor ide(PVC)gray
Insulation thickness average : 9mil.
Minimum insulation thickness : 7mil.

PHYSICAL PROPERTIES : After 7 days air oven at 136°C
Average tensile strength : 1500 lbs/
Percent of or iginal : 70% at least
Average elongation : 200%
Percent of or iginal : 65% at least

ELECTRONIC CHARACTERISTICS :
Spark test : 2500V
Dielectric strength test : Minimum 2 KV in 1 minute
Conductor resistance : Maximum 143Ω/km
Insulation resistance : Minimum 100 MΩ-km
Capacity : 24pF/m (G-S-G)
Inductance : 1.4μH/m
Character istic Impedance : 145Ω (G-S-G)
Propagation delay time : 3ns/m

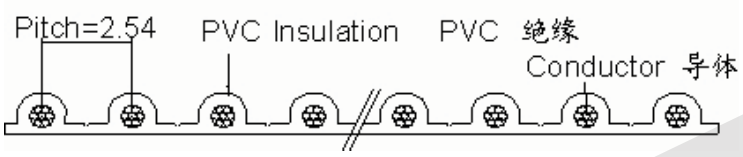

ORDER INFORMATION

Product NO.: KLS17-254-FC-XX - 6

Part Number	Pin Number XX:02~42Pin	Long / Reel 6-305M/Reel

UL2651 Flat Cable Series

Code No.	Number of Cores	Size of conductor		Thic kness (mm 0.05)	Width (mm)	Allowable error (mm)
		AWG	Composition (solid/mm)			
FC-2	2	26	7/0.16	1	5.08	0.30
FC-3	3	26	7/0.16	1	7.62	0.30
FC-4	4	26	7/0.16	1	10.16	0.30
FC-5	5	26	7/0.16	1	12.7	0.30
FC-6	6	26	7/0.16	1	15.24	0.3
FC-7	7	26	7/0.16	1	17.78	0.30
FC-8	8	26	7/0.16	1	20.32	0.30
FC-9	9	26	7/0.16	1	22.86	0.30
FC-10	10	26	7/0.16	1	25.4	0.30
FC-12	12	26	7/0.16	1	30.48	0.30
FC-13	13	26	7/0.16	1	33.02	0.30
FC-14	14	26	7/0.16	1	35.56	0.30
FC-15	15	26	7/0.16	1	38.1	0.30
FC-16	16	26	7/0.16	1	40.64	0.40
FC-18	18	26	7/0.16	1	45.72	0.40
FC-20	20	26	7/0.16	1	50.8	0.40
FC-22	22	26	7/0.16	1	55.88	0.40
FC-24	24	26	7/0.16	1	60.96	0.40
FC-30	30	26	7/0.16	1	76.2	0.50
FC-40	40	26	7/0.16	1	101.6	0.50
FC-42	42	26	7/0.16	1	106.68	0.50

ORDER INFORMATION

Product NO.: KLS17-254-FC-XX - 6

- KLS17-254-FC: Part Number
- XX: Pin Number, XX:02~42Pin
- 6: Long / Reel, 6-305M/Reel

UL2651 Rainbow Flat Cable Series

KLS17-127-RFC Series

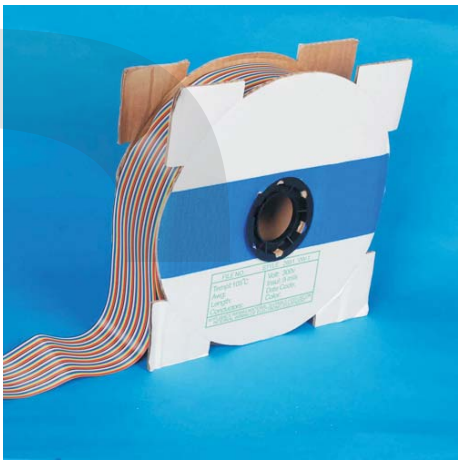

Product Description
UL STYLE: 2651
Rate temperature : 105°C
Rate voltage : 300V
Passes UL VW-1 & CSA Standard : C22.2 No. 210.2
Flame test : FT1,FT2
Solid or stranded ,tinned or bare copper conductor 26~24AWG
PVC insulation , comply with ROHS environmental standard
Uniform insulation thickness to ensure easy stripping and cutting
For general purpose internal wiring of appliance

PHYSICAL PROPERTIES : After 7 days air oven at 136°C
Average tensile strength : 1500 lbs/
Percent of or iginal : 70% at least
Average elongation : 200%
Percent of or iginal : 65% at least

ELECTRONIC CHARACTERISTICS :
Spark test : 2500V
Dielectric strength test : Minimum 2 KV in 1 minute
Conductor resistance : Maximum 237Ω/km
Insulation resistance : Minimum 100 MΩ-km
Capacity : 44pF/m (G-S-G)
Inductance : 1.45μH/m
Character istic Impedance : 105Ω (G-S-G)
Propagation delay time : 4.2 ns/m

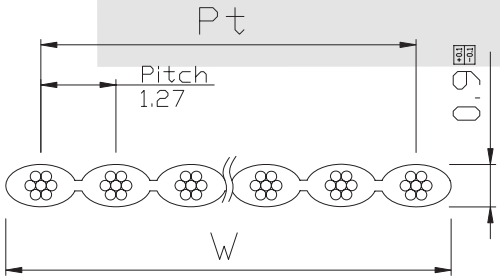

AWG size : 28 AWG
Mater ial of insulation : polyvinyl chlor ide(PVC) gray
Insulation thickness average : 9mil.
Minimum insulation thickness : 7mil

ORDER INFORMATION

Product NO.: KLS17-127-RFC-XX - 1

Part Number	Pin Number	Long / Reel
	XX:09~60Pin	1-30.5M/Reel 2-76.5M/Reel

UL2651 Rainbow Flat Cable Series

Code No.	Number of Cores	Size of conductor		Thic kness (mm 0.05)	Width (mm)	Allowable error (mm)
		AWG	Composition (solid/mm)			
RFC-09	9	28	7/0.127	0.9	11.43	0.30
RFC-10	10	28	7/0.127	0.9	12.7	0.30
RFC-14	14	28	7/0.127	0.9	17.78	0.30
RFC-15	15	28	7/0.127	0.9	19.05	0.30
RFC-16	16	28	7/0.127	0.9	20.32	0.30
RFC-20	20	28	7/0.127	0.9	25.4	0.30
RFC-25	25	28	7/0.127	0.9	31.75	0.30
RFC-26	26	28	7/0.127	0.9	33.02	0.30
RFC-30	30	28	7/0.127	0.9	38.1	0.30
RFC-34	34	28	7/0.127	0.9	43.18	0.40
RFC-36	36	28	7/0.127	0.9	45.72	0.40
RFC-40	40	28	7/0.127	0.9	50.8	0.40
RFC-50	50	28	7/0.127	0.9	63.5	0.40
RFC-60	60	28	7/0.127	0.9	76.2	0.40
RFC-64	64	28	7/0.127	0.9	81.28	0.40

ORDER INFORMATION

Product NO.: KLS17-127-RFC-XX - 1

- KLS17-127-RFC: Part Number
- XX: Pin Number, XX:09~60Pin
- 1: Long / Reel, 1-30.5M/Reel, 2-76.5M/Reel

Rainbow Flat Cable Series

KLS17-2.54-RFC (UL2651 2.54mm)



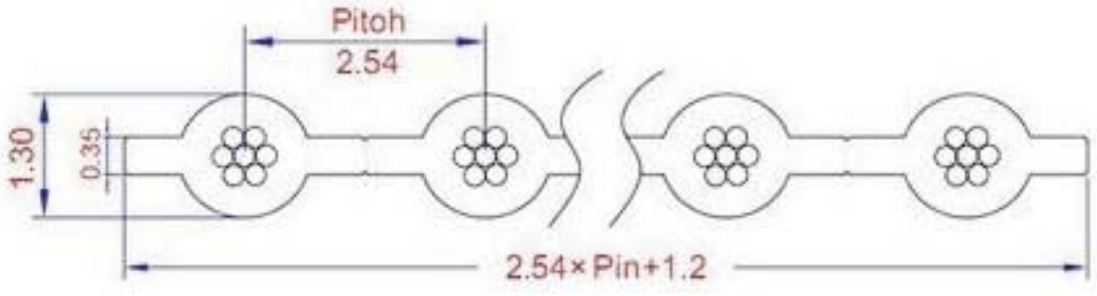

UL&CSA GRADE :

UL STYLE: 2651	CSA Standard : C22.2 No. 210.2
Rate temperature : 105°C	Rate temperature : 105°C
Rate voltage : 300V	Rate voltage : 300V
Flame test : VW-1	Flame test : FT1,FT2

CONDUCTOR : Solid

AWG size : 26AWG
Number of strands in each conductor : 7/0.16mm.
Lay of strands in each conductor : 0.6 inch at least
Cross section area : 253mil.

PHYSICAL PROPERTIES : After 7 days air oven at 136°C

Average tensile strength : 1500 lbs/
Percent of or iginal : 70% at least
Average elongation : 200%
Percent of or iginal : 65% at least

INSULATION :

Mater ial of insulation : polyvinyl chlor ide(PVC)gray
Insulation thickness average : 9mil.
Minimum insulation thickness : 7mil.

ELECTRONIC CHARACTERISTICS :

Spark test : 2500V
Dielectric strength test : Minimum 2 KV in 1 minute
Conductor resistance : Maximum 143 /km
Insulation resistance : Minimum 100 M-km
Capacity : 24pF/m (G-S-G)
Inductance : 1.4μH/m
Character istic Impedance : 145 (G-S-G)
Propagation delay time : 3ns/m

USAGE :

Solid : Used for most electronic equipment requiring higher currents such as jumper wires or short-distance connections.

CONSTRUCTION TABLE

Code No.	Number of Cores	Siz e of conductor		Thic kness (mm±0.05)	Width (mm)	Allowable error(mm)
		(AWG)	Composition (solid/mm)			
RFC-2	2	26	7/0.16	1.0	5.08	± 0.30
RFC-3	3	26	7/0.16	1.0	7.62	± 0.30
RFC-4	4	26	7/0.16	1.0	10.16	± 0.30
RFC-5	5	26	7/0.16	1.0	12.70	± 0.30
RFC-6	6	26	7/0.16	1.0	15.24	0.30
RFC-7	7	26	7/0.16	1.0	17.78	± 0.30
RFC-8	8	26	7/0.16	1.0	20.32	± 0.30
RFC-9	9	26	7/0.16	1.0	22.86	± 0.30
RFC-10	10	26	7/0.16	1.0	25.40	± 0.30
RFC-12	12	26	7/0.16	1.0	30.48	± 0.30
RFC-13	13	26	7/0.16	1.0	33.02	± 0.30
RFC-14	14	26	7/0.16	1.0	35.56	± 0.30
RFC-15	15	26	7/0.16	1.0	38.10	± 0.30
RFC-16	16	26	7/0.16	1.0	40.64	± 0.40
RFC-18	18	26	7/0.16	1.0	45.72	± 0.40
RFC-20	20	26	7/0.16	1.0	50.80	± 0.40
RFC-22	22	26	7/0.16	1.0	55.88	± 0.40
RFC-24	24	26	7/0.16	1.0	60.96	± 0.40
RFC-30	30	26	7/0.16	1.0	76.20	± 0.50
RFC-40	40	26	7/0.16	1.0	101.60	± 0.50
RFC-42	42	26	7/0.16	1.0	106.68	± 0.50

Package:

TYPE 1: 30.5 M **TYPE 2 : 76.5 M** **TYPE 3 : 153 M** **TYPE 4 : 305 M**

Rainbow Flat Cable Series

KLS17-AFC (UI20080)





UI20080 PVC FLAT WIRE
Product Category: PVC FLAT CABLE
Temperature Rating: 80℃
Rated voltage: 30V
Test voltage: 2000V
Insulation Material: PVC
Conductor material: bare copper/tinned copper/sliver copper
Application： For internal wiring of electronic and electrical equipment

Conductor			Insulates				Electrical specification	Packs	Packs
AWG	Conductor NO*mm	Diameter mm	The core counts	Thick mm	Spacing	Over diameter mm	Max.resistance at 20℃(Ω/KM)	Standing voltage	Meter/Roll
28	19*0.08	0.4	AFC-02	0.41	1.22	2.54	239	500	305
			AFC-03			3.86			
			AFC-04			5.18			
			AFC-05			6.5			
			AFC-06			7.82			
			AFC-07			9.14			
			AFC-08			10.46			
26	30*0.08	0.51	AFC-02	0.41	1.33	2.76	150	500	305
			AFC-03			4.19			
			AFC-04			5.62			
			AFC-05			7.05			
			AFC-06			8.48			
			AFC-07			9.91			
			AFC-08			11.34			

Package:
TYPE 1: 30.5 M　　TYPE 2 : 76.5 M　　TYPE 3 : 153 M　　TYPE 4 : 305 M

ORDER INFORMATION

Product No.: KLS17-AFC-08-28AWG-1.5-R-1

Part No.
Series No.
02-08pin
28AWG: or 26AWG
pitch:1.25mm or 1.5mm
R: Red　L: Blue
Length /Reel: 1-30.5M/Reel　2-76.5M/Reel
3-153M/Reel　4-305M/Reel

Rainbow Flat Cable Series

KLS17-1.27-BFC (UL20012-ST)

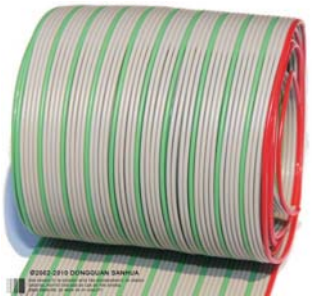

UL20012-ST PH: 1.27mm PVC Patterned flat cable			
Product Category	PVC FLAT CABLE	Test voltage	2000V
Temperature Rating	-20℃+105℃	Insulation Material	PVC
Rated voltage	300V	Conductor material	bare copper/tinned copper/sliver copper

• Features:
This cable insulation using soft PVC materials, resulting in a high degree of flexibility. 7 tin conductor using copper wire woven from strangulation, cleared fields, connect the two ends of high-density connectors, you can optimize the structure of the device can reduce the welding equipment in the internal space.
• This product is environmentally friendly. The insulator does not contain specific bromide-based fire retardant (PBDE or PBB) or the heavy metals Pb, Cr6+, Cd and Hg. It also conforms to the RoHS (restriction of the use of certain hazardous substances in electrical and electronic equipment) regulations.
• Applications :
This product can be used in computers and peripherals, communications equipment, office equipment, numerical control equipment, internal wiring, in particular, the ideal high-density wiring, the fixed-line optimization in- house.

♦ **Features**

1. Easy one-step I.D.C. connection without insulation stripping at the mass-termination section.
2. Ten colors allow easy termination, connecting and branching at unfused parts.
3. Free wiring direction change and high adaptability to wiring place because the unfused parts of the cable can be rounded.

♦ **Application**

Internal wiring of computers, measurement control devices, business machines, communication devices, and other electronic equipment.

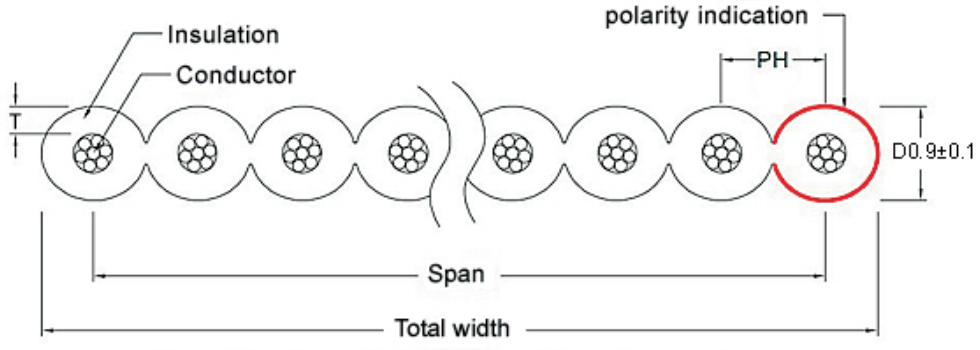

Specification:(N=Number of conductors) n≤30 n≤±0.30 n≤31 n≤0.40

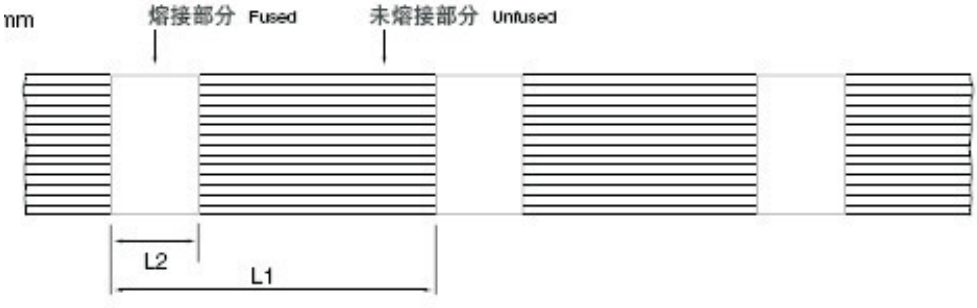

L1=140mm L2=40mm

Rainbow Flat Cable Series

KLS17-1.27-BFC (UL20012-ST)

• **Characteristics:**

Conductor resistance Ω/km (20degrees)	222 or less	Characteristic impedance Ω	Approx. 106
Insulation resistance MΩ -km (20degrees)	100 or more	Propagation delay ns/m	Approx. 5.0
Withstand voltage Vrms/min	2000	Near-end crosstalk %	Approx. 4.0
Capacitance pF/m	Approx. 52	Flame resistance characteristics	VW- 1

• **Item name and core colors:**

Item Name	Classification	Color of core wire
KLS17-1.27-BFC	Sudare type	Red - Gray - Gray - Gray - Green ... 1st core wire = Red, 5nth core wire = Green, Others = Gray According to the center line of color can be customized with a free

• **Type configuration table:**

Number of cores	Conductor	Insulation	span mm	Total width mm	Conductor pitch mm	Standard length
BFC-08	7/0.127 (AWG28)	Elastic PVC	8.89	10.2	1.27	61m/reel (200feet)
BFC-10			11.43	12.7		
BFC-14			16.51	17.8		
BFC-16			19.05	20.3		
BFC-20			24.13	25.4		
BFC-24			29.21	30.5		
BFC-25			30.48	31.8		
BFC-26			31.75	33.0		
BFC-30			36.83	38.1		
BFC-34			41.91	43.2		
BFC-36			44.45	45.7		
BFC-37			45.72	47.0		
BFC-40			49.53	50.8		
BFC-50			62.23	63.5		
BFC-60			74.93	76.2		
BFC-64			80.01	81.3		
BFC-80			88.9	102.0		

• Other range:Can be customized,non-standard wire, RoHS & RoHS + NP, cut wire tinning, Molding, terminal line.

ORDER INFORMATION

Product No.: KLS17-127-BFC-16 - 2

Part No.
Pitch:1.27mm
Series No.
Pin Number: 8~64Pin
Length /Reel: 1-30.5M/Reel 2-76.5M/Reel
3-153M/Reel 4-305M/Reel

Rainbow Flat Cable Series

KLS17-1.27-CFC (UI4539)

●Due to the use of our unique technology, this cable has the same flexibility and electrical characteristics as those of conventional cables, despite the use of non-PCV/non-halogen resin for the insulation material.
●This product is environmentally friendly. It also conforms to the RoHS regulations (which limit the use of specific substances contained in electrical and electronic equipment).
●The flame retardant rating is 105degrees, which is the same as that of the PVC type.

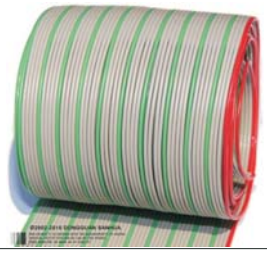

Applications

●Ideal for connecting equipment such as computers, peripheral equipment, communication equipment, and office equipment and also for internal fixed wiring.

♦ **Features**

1. Easy one-step I.D.C. connection without insulation stripping at the mass-termination section.
2. Ten colors allow easy termination, connecting and branching at unfused parts.
3. Free wiring direction change and high adaptability to wiring place because the unfused parts of the cable can be rounded.

♦ **Application**

Internal wiring of computers, measurement control devices, business machines, communication devices, and other electronic equipment.

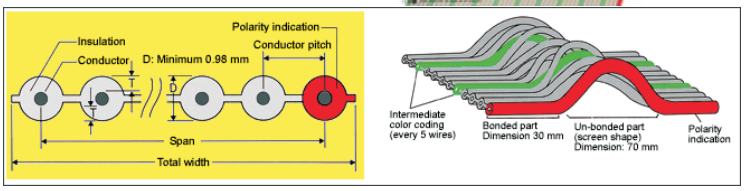

Characteristics

Conductor resistance Ω/km (20degrees)	222 max	Characteristic impedance Ω	Standard 100
Insulation resistance MΩ/-km (20degrees)	100 min	Propagation delay time difference*1 ns/m	Standard5.0
Withstand voltage Vrms/min	2000	Near-end crosstalk*1 %	Standard 5.0
Capacitance*1 pF/m	Standard 51	Flame retardant characteristics	VW-1

Item name, classification, and color of core wire

Item Name	Classification	Color of core wire
KLS17-1.27-CFC	Sudare type	Red - Gray - Gray - Gray - Green ... 1st core wire = Red, 5nth core wire = Green, Others = Gray

Type configuration table

Number of core wires	Conductor	Insulator	Span mm	Total width mm	Wire pitch mm	Standard length
10	AWG28 (7/0.127)	Flame retardant polyolefin	11.43	12.7	1.27	1reel 61m (200feet)
14			16.51	17.8		
16			19.05	20.3		
20			24.13	25.4		
24			29.21	30.5		
26			31.75	33.0		
30			36.83	38.1		
34			41.91	43.2		
40			49.53	50.8		
50			62.23	63.5		
60			74.93	76.2		
64			80.01	81.3		

ORDER INFORMATION

Product No.: KLS17-127-CFC-16 - 2

Part No.
Pitch:1.27mm
Series No.
Pin Number: 8~64Pin
Length /Reel: 1-30.5M/Reel 2-76.5M/Reel 3-153M/Reel 4-305M/Reel

Rainbow Flat Cable Series

KLS17-1.27-DFC (UL20027)

Features

●This cable insulation using soft PVC materials, resulting in a high degree of flexibility. 7 tin conductor using copper wire woven from strangulation, cleared fields, connect the two ends of high-density connectors, you can optimize the structure of the device can reduce the welding equipment in the internal space.

●This product is environmentally friendly. The insulator does not contain specific bromide-based fire retardant (PBDE or PBB) or the heavy metals Pb, Cr6+, Cd and Hg. It also conforms to the RoHS (restriction of the use of certain hazardous substances in electrical and electronic equipment) regulations.

Applications

●This product can be used in computers and peripherals, communications equipment, office equipment, numerical control equipment, internal wiring, in particular, the ideal high-density wiring, the fixed-line optimization in-house.

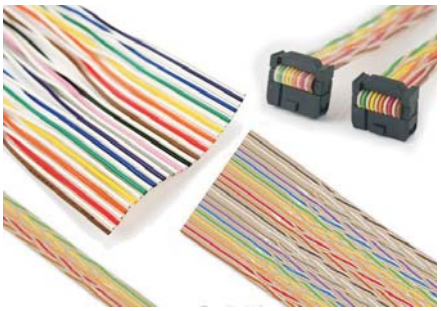

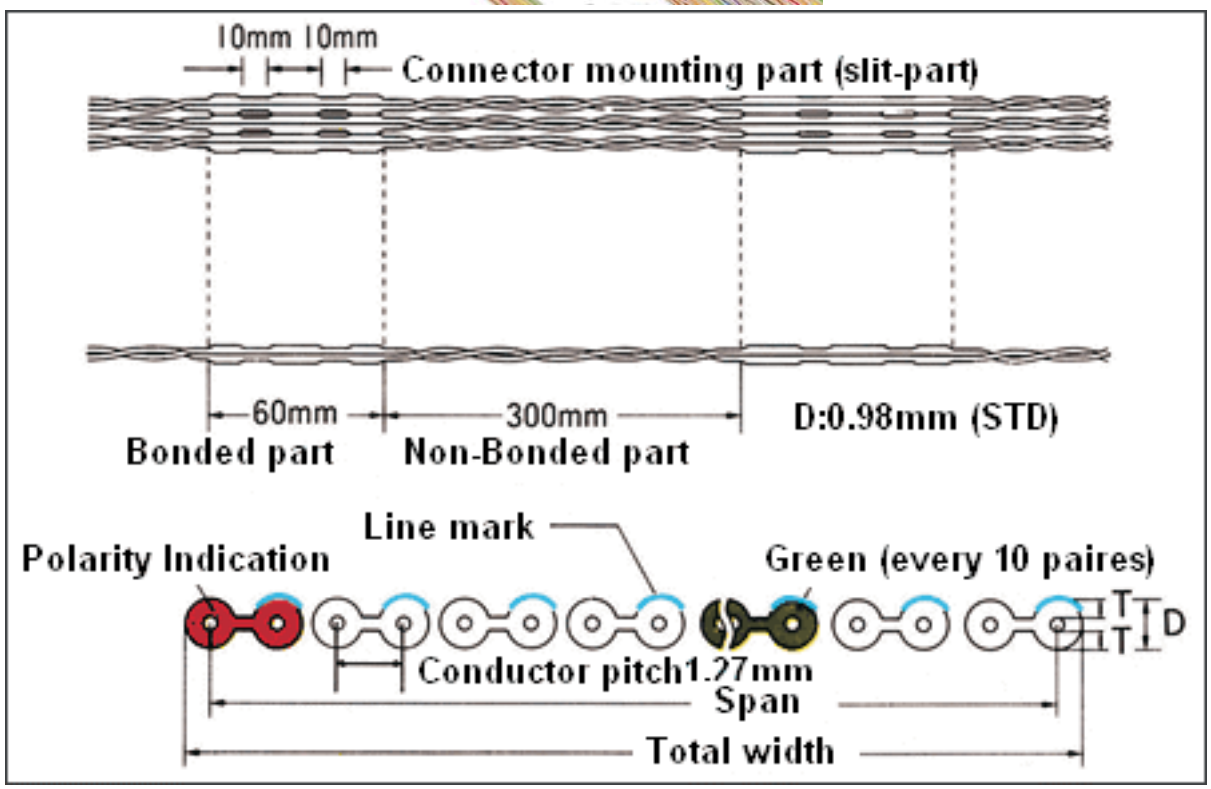

Characteristics

Conductor resistance Ω/km	222(MAX)	Characteristic impedance Ω	140(STD)
Insulation resistance -km	100(MIN)	Propagation delay ns/m	5.0(STD)
Withstand voltage Vrms/min	2000(MINI)	Near-end crosstalk %	4.8(STD)
Capacitance pF/m	44(STD)		

Rainbow Flat Cable Series

KLS17-1.27-DFC (20027P)

Configuration table

Number of Pairs (cores)	Conductor	Insulator	Span mm	Total Width mm	Wire pitch mm	Sandard length
5(10)	7/0.127 (AWG28)	SoftPVC	11.43	12.7	1.27	30.5m/reel (100feet)
8(16)			19.05	20.3		
10(20)			24.13	25.4		
13(26)			31.75	33.0		
15(30)			36.83	38.1		
17(34)			41.91	43.2		
20(40)			49.53	50.8		
25(50)			62.23	63.5		
30(60)			74.93	76.2		
32(64)			80.01	81.3		

Core wire color arrangement

Pair No	1		2		3		4		5	
Core No	1	2	3	4	5	6	7	8	9	10
Color	Brown	White	Red	White	Orange	White	Yell	White	Blue	White
Pair No	6		7		8		9		10	
Core No	11	12	13	14	15	16	17	18	19	20
Color	Green	White	Purple	White	Gray	White	Powder	White	Black	White

- **Can be customized Color,non-standard wire, RoHS & RoHS + NP, cut wire tinning, Molding, terminal line.**

ORDER INFORMATION

Product No.: KLS17-127-DFC-16 - 2

Part No.
Pitch:1.27mm
Series No.
Pin Number: 8~64Pin
Length /Reel: 1-30.5M/Reel 2-76.5M/Reel
3-153M/Reel 4-305M/Reel

Flat Cable Processing Series

KLS17-FCP-01 	**KLS17-FCP-02** 	**KLS17-FCP-03** 
KLS17-FCP-04 	**KLS17-FCP-05** 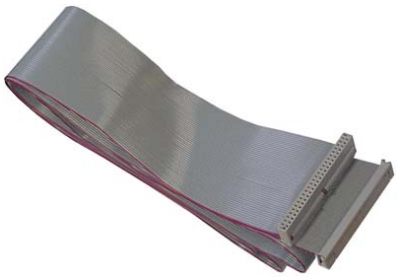	**KLS17-FCP-06** 
KLS17-FCP-07 	**KLS17-FCP-08** 	**KLS17-FCP-09** 
KLS17-FCP-10 	**KLS17-FCP-11** 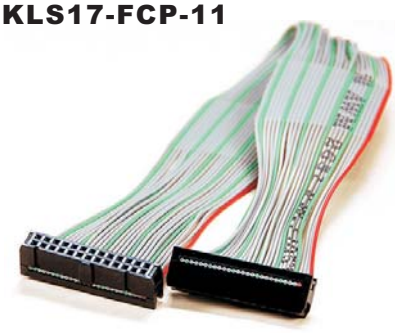	**KLS17-FCP-12** 

Flat Cable Processing Series

KLS17-FCP-13 (2.54mm) 	**KLS17-FCP-14 (2.0mm)** 	**KLS17-FCP-15 (1.27mm)** 
KLS17-FCP-16 	**KLS17-FCP-17** 	**KLS17-FCP-18** 
KLS17-FCP-19 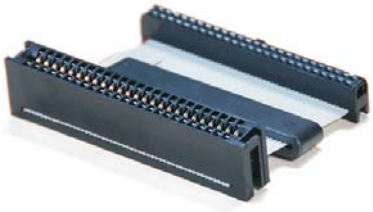	**KLS17-FCP-20** 	**KLS17-FCP-20** 

Wire Harness Processing Series

KLS17-WWP-01
(1.25mm pitch)



KLS17-WWP-02
(1.50mm pitch LVDS Cable)



KLS17-WWP-03
(2.0mm pitch)



KLS17-WWP-04
(2.50mm pitch)



KLS17-WWP-05
(2.0mm Or 2.54mm pitch)



KLS17-WWP-06
(3.00mm pitch)



KLS17-WWP-07
(3.00mm pitch)



KLS17-WWP-08
(3.00mm pitch)



KLS17-WWP-09
(3.96mm pitch)



KLS17-WWP-10
(3.96mm pitch)



KLS17-WWP-11
(4.20mm pitch)

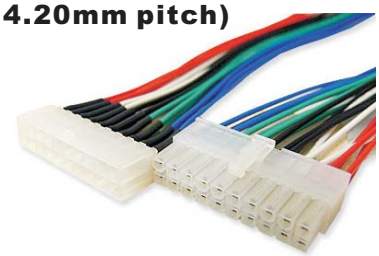

KLS17-WWP-12
(4.20mm pitch)



Wire Harness Processing Series

KLS17-WWP-13
(5.08mm pitch)



KLS17-WWP-14
(5.08mm pitch)



KLS17-WWP-15
(5.08mm pitch)



KLS17-WWP-16
(5.08mm pitch)



KLS17-WWP-17
(2.54mm pitch)



KLS17-WWP-18



KLS17-WWP-19



KLS17-WWP-20



KLS17-WWP-21



KLS17-WWP-22



KLS17-WWP-23



KLS17-WWP-23



Wire Harness Processing Series

KLS17-WWP-25	KLS17-WWP-26	KLS17-WWP-27
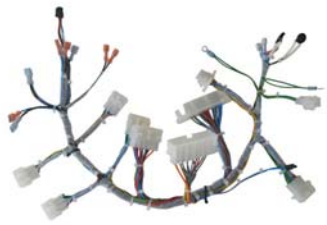		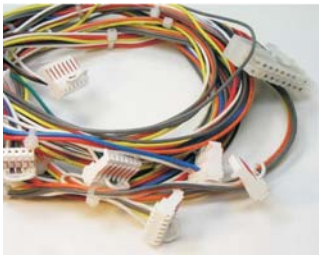

USB Cable Processing Series

KLS17-UCP-01 (USB 3.0 CABLE)



Connector A: USB 3.0 A Male Type (KLS1-149)
Connector B: USB 3.0 A Male Type (KLS1-149)
Cable Length:1.2 Metre
Cable type: XX
Cable Color:Blue

Description:

- The big bonus of course is speed: Maxing out at 4.8Gbps, USB 3.0 is 10 times faster than the current USB 2.0 spec.
- While things look considerably different internally if you check out the connectors, old cables and equipment will be backward compatible with all existing USB hardware.

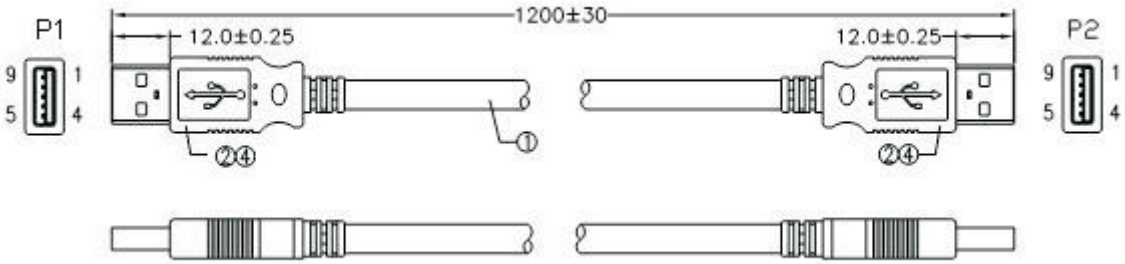

REMARK:

1. TEST:
   (1).100% SHORT,OPEN,MISWIRE TEST
   (2). COND RESISTANCE: 5 ohm.
   (3). INSUL RESISTANCE: 20M ohm.
   (4). RESISTANCE VOLTAGE: 300V DC.
2. LEAD FREE:RoHS STANDARD

4.	PVC 35P COLOR BLUE	0.015	KG
3.	USB 3.0 B TYPE MALE,GOLD PLATED,INSULATION COLOR BLUE		
2.	USB 3.0 A TYPE MALE,GOLD PLATED,INSULATION COLOR BLUE	2	PCS
1.	CABLE:UL20276 (1P*28AWG+D+AL+Mylar)*2C+1P*28AWG+2C*24AWG+AL+B PVC JACKET COLOR BLUE. OD=6.0mm	1	PCS

Order Information

Product No.: KLS17-UCP-01-1.2M-L-XX

Part No.
Series No.
Cable Length:1.2M and other Length
Cable Color: L=Blue B=Black E=Beige
XX: Cable type

USB Cable Processing Series

KLS17-UCP-02 (USB 3.0 CABLE)



Connector A: USB 3.0 A Male Type (KLS1-149)
Connector B: USB 3.0 A Male Type (KLS1-149)
Cable Length:1.2 Metre
Cable type: XX
Cable Color:Blue

Description:

- The big bonus of course is speed: Maxing out at 4.8Gbps, USB 3.0 is 10 times faster than the current USB 2.0 spec.
- While things look considerably different internally if you check out the connectors, old cables and equipment will be backward compatible with all existing USB hardware.

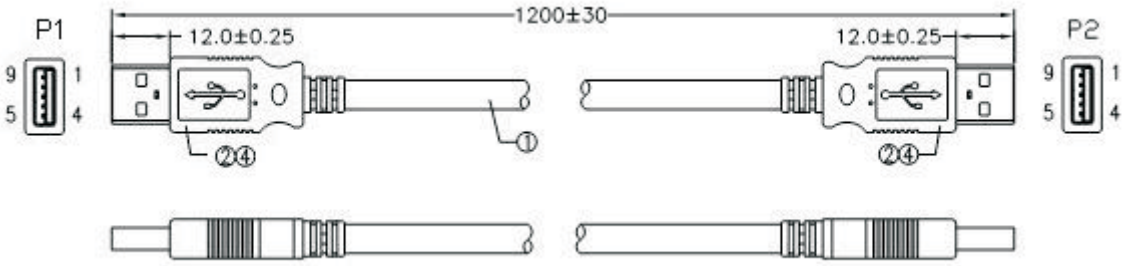

REMARK:

1. TEST:
   (1).100% SHORT,OPEN,MISWIRE TEST
   (2). COND RESISTANCE: 5 ohm.
   (3). INSUL RESISTANCE: 20M ohm.
   (4). RESISTANCE VOLTAGE: 300V DC.
2. LEAD FREE:RoHS STANDARD

4.	PVC 35P COLOR BLUE	0.015	KG
3.	USB 3.0 B TYPE MALE,GOLD PLATED,INSULATION COLOR BLUE		
2.	USB 3.0 A TYPE MALE,GOLD PLATED,INSULATION COLOR BLUE	2	PCS
1.	CABLE:UL20276 (1P*28AWG+D+AL+Mylar)*2C+1P*28AWG+2C*24AWG+AL+B PVC JACKET COLOR BLUE. OD=6.0mm	1	PCS

Order Information

Product No.: KLS17-UCP-02-1.2M-L-XX

Part No.
Series No.
Cable Length:1.2M and other Length
Cable Color: L=Blue B=Black E=Beige
XX: Cable type

USB Cable Processing Series

KLS17-UCP-03 (USB 2.0 CABLE)

Connector A: USB 2.0 A Male Type (KLS1-182)
Connector B: USB 2.0 A Male Type (KLS1-182)
Cable Length:1.5 Metre
Cable type: XX
Cable Color:Black

Features:

- USB 2.0 for faster data transfer speeds
- Also compatible with USB 1.1 and 1.0 devices

●This USB 2.0 Type Cable is perfect for connecting between your computer and a peripheral device with a USB 2.0 (or USB 1.1 / 1.0) connection, such as an external hard drive (HDD), printer, scanner, camera, video camera, or any other device which has a USB Type A connection.



Order Information

Product No.: KLS17-UCP-03-2.0-1.5M-B-XX

- **Part No.**
- **Series No.**
- **USB Connector type:2.0,1.1,1.0**
- **Cable Length:1.5M and other Length**
- **Cable Color: L=Blue B=Black E=Beige**
- **XX: Cable type**

USB Cable Processing Series

KLS17-UCP-04 (USB 2.0 CABLE)

Connector A: USB 2.0 A Male Type (KLS1-182)
Connector B: USB 2.0 A Male Type (KLS1-182)
Cable Length:1.5 Metre
Cable type: XX
Cable Color:Black

Features:
- USB 2.0 for faster data transfer speeds
- Also compatible with USB 1.1 and 1.0 devices

●This USB 2.0 Type Cable is perfect for connecting between your computer and a peripheral device with a USB 2.0 (or USB 1.1 / 1.0) connection, such as an external hard drive (HDD), printer, scanner, camera, video camera, or any other device which has a USB Type A connection.



Order Information

Product No.: KLS17-UCP-04-2.0-1.5M-B-XX

- **Part No.**
- **Series No.**
- **USB Connector type:2.0,1.1,1.0**
- **Cable Length:1.5M and other Length**
- **Cable Color: L=Blue B=Black E=Beige**
- **XX: Cable type**

USB Cable Processing Series

KLS17-UCP-05 (USB 2.0 CABLE)

Connector A: USB 2.0 A Male Type (KLS1-182)
Connector B: USB 2.0 A Male Type (KLS1-182)
Cable Length:1.5 Metre
Cable type: XX
Cable Color:Black

Features:

- USB 2.0 for faster data transfer speeds
- Also compatible with USB 1.1 and 1.0 devices

●This USB 2.0 Type Cable is perfect for connecting between your computer and a peripheral device with a USB 2.0 (or USB 1.1 / 1.0) connection, such as an external hard drive (HDD), printer, scanner, camera, video camera, or any other device which has a USB Type A connection.



Order Information

Product No.: KLS17-UCP-05-2.0-1.5M-B-XX

Part No.
Series No.
USB Connector type:2.0,1.1,1.0
Cable Length:1.5M and other Length
Cable Color: L=Blue B=Black E=Beige
XX: Cable type

KLS electronic
www.cnkls.com

USB Cable Processing Series

KLS17-UCP-06 (USB 2.0 CABLE)

Connector A: USB 2.0 A Male Type (KLS1-182)
Connector B: USB 2.0 A Male Type (KLS1-182)
Cable Length:1.5 Metre
Cable type: XX
Cable Color:Black

Features:
- USB 2.0 for faster data transfer speeds
- Also compatible with USB 1.1 and 1.0 devices

●This USB 2.0 Type Cable is perfect for connecting between your computer and a peripheral device with a USB 2.0 (or USB 1.1 / 1.0) connection, such as an external hard drive (HDD), printer, scanner, camera, video camera, or any other device which has a USB Type A connection.

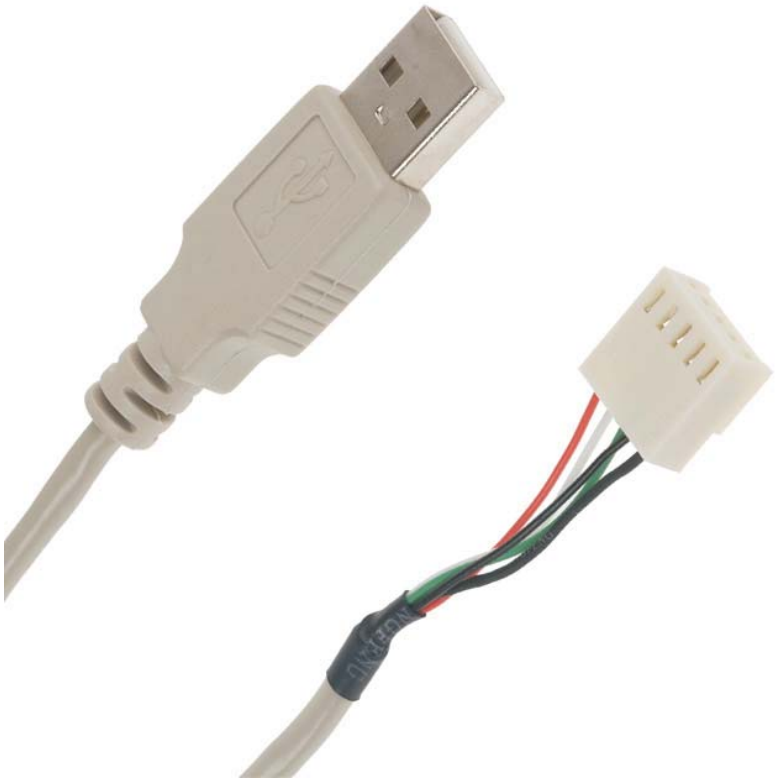

Order Information

Product No.: KLS17-UCP-06-2.0-1.5M-B-XX

- **Part No.**
- **Series No.**
- **USB Connector type:2.0,1.1,1.0**
- **Cable Length:1.5M and other Length**
- **Cable Color: L=Blue B=Black E=Beige**
- **XX: Cable type**

USB Cable Processing Series

KLS17-UCP-07 (USB 2.0 CABLE)

Connector A: USB 2.0 A Male Type (KLS1-182)
Connector B: USB 2.0 A Male Type (KLS1-182)
Cable Length:1.5 Metre
Cable type: XX
Cable Color:Black

Features:

- USB 2.0 for faster data transfer speeds
- Also compatible with USB 1.1 and 1.0 devices

●This USB 2.0 Type Cable is perfect for connecting between your computer and a peripheral device with a USB 2.0 (or USB 1.1 / 1.0) connection, such as an external hard drive (HDD), printer, scanner, camera, video camera, or any other device which has a USB Type A connection.



Order Information

Product No.: KLS17-UCP-07-2.0-1.5M-B-XX

- **Part No.**
- **Series No.**
- **USB Connector type:2.0,1.1,1.0**
- **Cable Length:1.5M and other Length**
- **Cable Color: L=Blue B=Black E=Beige**
- **XX: Cable type**

USB Cable Processing Series

KLS17-UCP-08 (USB 2.0 CABLE)

Connector A: USB 2.0 A Male Type (KLS1-182)
Connector B: USB 2.0 A Male Type (KLS1-182)
Cable Length:1.5 Metre
Cable type: XX
Cable Color:Black

Features:
- USB 2.0 for faster data transfer speeds
- Also compatible with USB 1.1 and 1.0 devices

●This USB 2.0 Type Cable is perfect for connecting between your computer and a peripheral device with a USB 2.0 (or USB 1.1 / 1.0) connection, such as an external hard drive (HDD), printer, scanner, camera, video camera, or any other device which has a USB Type A connection.



Order Information

Product No.: KLS17-UCP-08-2.0-1.5M-B-XX

- **Part No.**
- **Series No.**
- **USB Connector type:2.0,1.1,1.0**
- **Cable Length:1.5M and other Length**
- **Cable Color: L=Blue B=Black E=Beige**
- **XX: Cable type**

USB Cable Processing Series

KLS17-UCP-09 (DHSL CABLE)

Connector A: USB 2.0 A Male Type (KLS1-180A)
Connector B: 2.54mm Pitch Connector (KLS1-540A)
Cable Length:1.5 Metre
Cable type: XX
Cable Color:Black

Features:
- USB 2.0 for faster data transfer speeds
- Also compatible with USB 1.1 and 1.0 devices

●This USB 2.0 Type Cable is perfect for connecting between your computer and a peripheral device with a USB 2.0 (or USB 1.1 / 1.0) connection, such as an external hard drive (HDD), printer, scanner, camera, video camera, or any other device which has a USB Type A connection.



Order Information

Product No.: KLS17-UCP-09-2.0-1.5M-B-XX

- **Part No.**
- **Series No.**
- **USB Connector type:2.0,1.1,1.0**
- **Cable Length:1.5M and other Length**
- **Cable Color: L=Blue B=Black E=Beige**
- **XX: Cable type**

USB Cable Processing Series

KLS17-UCP-10 (RS232 CABLE)

Connector A: USB 2.0 A Male Type (KLS1-180B)
Connector B:
Cable Length:1.5 Metre
Cable type: XX
Cable Color:Beige

Features:
- USB 2.0 for faster data transfer speeds
- Also compatible with USB 1.1 and 1.0 devices

●This USB 2.0 Type Cable is perfect for connecting between your computer and a peripheral device with a USB 2.0 (or USB 1.1 / 1.0) connection, such as an external hard drive (HDD), printer, scanner, camera, video camera, or any other device which has a USB Type A connection.



Order Information

Product No.: KLS17-UCP-10-2.0-1.5M-B-XX

- **Part No.**
- **Series No.**
- **USB Connector type:2.0,1.1,1.0**
- **Cable Length:1.5M and other Length**
- **Cable Color: L=Blue B=Black E=Beige**
- **XX: Cable type**

USB Cable Processing Series

KLS17-UCP-11 (USB 2.0 CABLE)

Connector A: USB 2.0 A Male Type (KLS1-182)
Connector B: Mini USB
Cable Length:1.5 Metre
Cable type: XX
Cable Color:Black

Features:
- USB 2.0 for faster data transfer speeds
- Also compatible with USB 1.1 and 1.0 devices

●This USB 2.0 Type Cable is perfect for connecting between your computer and a peripheral device with a USB 2.0 (or USB 1.1 / 1.0) connection, such as an external hard drive (HDD), printer, scanner, camera, video camera, or any other device which has a USB Type A connection.



Order Information

Product No.: KLS17-UCP-11-2.0-1.5M-B-XX

- **Part No.**
- **Series No.**
- **USB Connector type:2.0,1.1,1.0**
- **Cable Length:1.5M and other Length**
- **Cable Color: L=Blue B=Black E=Beige**
- **XX: Cable type**

USB Cable Processing Series

KLS17-UCP-12 (USB 3.0 CABLE)



Connector A: USB 3.0 A Male Type (KLS1-149)
Connector B: USB 3.0 A Male Type (KLS1-149)
Cable Length:1.2 Metre
Cable type: XX
Cable Color:Blue

Description:

- The big bonus of course is speed: Maxing out at 4.8Gbps, USB 3.0 is 10 times faster than the current USB 2.0 spec.
- While things look considerably different internally if you check out the connectors, old cables and equipment will be backward compatible with all existing USB hardware.

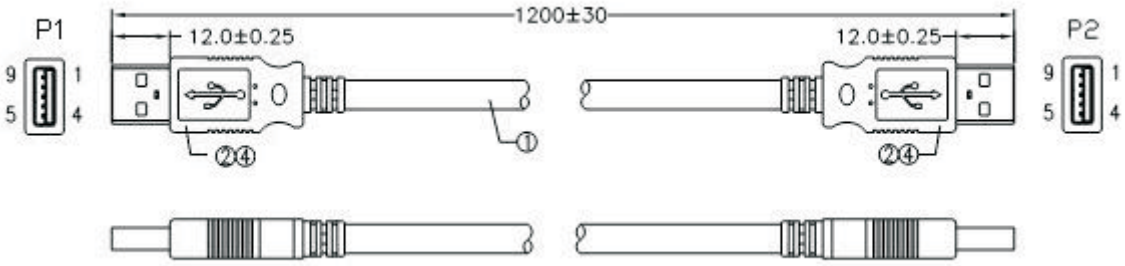

REMARK:

1. TEST:
   (1).100% SHORT,OPEN,MISWIRE TEST
   (2). COND RESISTANCE: 5 ohm.
   (3). INSUL RESISTANCE: 20M ohm.
   (4). RESISTANCE VOLTAGE: 300V DC.
2. LEAD FREE:RoHS STANDARD

4.	PVC 35P COLOR BLUE	0.015	KG
3.	USB 3.0 B TYPE MALE,GOLD PLATED,INSULATION COLOR BLUE		
2.	USB 3.0 A TYPE MALE,GOLD PLATED,INSULATION COLOR BLUE	2	PCS
1.	CABLE:UL20276 (1P*28AWG+D+AL+Mylar)*2C+1P*28AWG+2C*24AWG+AL+B PVC JACKET COLOR BLUE. OD=6.0mm	1	PCS

Order Information

Product No.: KLS17-UCP-12-1.2M-L-XX

Part No.
Series No.
Cable Length:1.2M and other Length
Cable Color: L=Blue B=Black E=Beige
XX: Cable type

USB Cable Processing Series

KLS17-UCP-13 (USB 2.0 CABLE)

Connector A: USB 2.0 A Male Type (KLS1-182)
Connector B: USB 2.0 A Female Type (KLS1-181D)
Cable Length:1.5 Metre
Cable type: XX
Cable Color:Black

Features:
- USB 2.0 for faster data transfer speeds
- Also compatible with USB 1.1 and 1.0 devices

●This USB 2.0 Type Cable is perfect for connecting between your computer and a peripheral device with a USB 2.0 (or USB 1.1 / 1.0) connection, such as an external hard drive (HDD), printer, scanner, camera, video camera, or any other device which has a USB Type A connection.



Order Information

Product No.: KLS17-UCP-13-2.0-1.5M-B-XX

- **Part No.**
- **Series No.**
- **USB Connector type:2.0,1.1,1.0**
- **Cable Length:1.5M and other Length**
- **Cable Color: L=Blue B=Black E=Beige**
- **XX: Cable type**

USB Cable Processing Series

KLS17-UCP-14 (USB 2.0 CABLE)

Connector A: USB 2.0 A Male Type (KLS1-182)
Connector B: Two Mini Din Connector Type
Cable Length:1.5 Metre
Cable type: XX
Cable Color:Black

Features:
- USB 2.0 for faster data transfer speeds
- Also compatible with USB 1.1 and 1.0 devices

●This USB 2.0 Type Cable is perfect for connecting between your computer and a peripheral device with a USB 2.0 (or USB 1.1 / 1.0) connection, such as an external hard drive (HDD), printer, scanner, camera, video camera, or any other device which has a USB Type A connection.



Order Information

Product No.: KLS17-UCP-14-2.0-1.5M-B-XX

Part No.
Series No.
USB Connector type:2.0,1.1,1.0
Cable Length:1.5M and other Length
Cable Color: L=Blue B=Black E=Beige
XX: Cable type

USB Cable Processing Series

KLS17-DCP-07

Connector A: DB9P Male Type (KLS1-213)
Connector B: USB 2.0 A Male Type (KLS1-182)
Cable Length:1.5 Metre
Cable type: XX
Cable Color:Beige

Features:
- USB 2.0 for faster data transfer speeds
- Also compatible with USB 1.1 and 1.0 devices

●This USB 2.0 Type Cable is perfect for connecting between your computer and a peripheral device with a USB 2.0 (or USB 1.1 / 1.0) connection, such as an external hard drive (HDD), printer, scanner, camera, video camera, or any other device which has a USB Type A connection.



Order Information

Product No.: KLS17-DCP-07-2.0-9F-1.50M-E-XX

Part No.
Series No.
USB Connector type:2.0,1.1,1.0
Pin: 9 Pins
M-Male F-Female
Cable Length:1.5M and other Length
Cable Color: L=Blue B=Black E=Beige
XX: Cable type

LAN Cable Processing Series

KLS17-LCP-01 (UTP CAT.5E Cable)

Connector A: UTP CAT .5E RJ45 Plug Type (KLS12-RJ45-8P8C)
Connector B: UTP CAT .5E RJ45 Plug Type (KLS12-RJ45-8P8C)
Cable Length:1.50 Metre
Cable type: XX
Cable Color:Blue



Order Information

Product No.: KLS17-LCP-01-1.50M-L-XX

- Part No.
- Series No.
- Cable Length:1.50M and other Length
- Cable Color: L=Blue B=Black E=Beige Y=Yellow G=Green R=Red
- XX: Cable type

LAN Cable Processing Series

KLS17-LCP-02 (UTP CAT.5E Cable)

Connector A: UTP CAT .5E RJ45 Plug Type (KLS12-RJ45-8P8C)
Connector B: UTP CAT .5E RJ45 Plug Type (KLS12-RJ45-8P8C)
Cable Length:1.50 Metre
Cable type: XX
Cable Color:Black



Order Information

Product No.: KLS17-LCP-02-1.50M-L-XX

Part No.
Series No.
Cable Length:1.50M and other Length
Cable Color: L=Blue B=Black E=Beige
Y=Yellow G=Green R=Red
XX: Cable type

KLS electronic
www.cnkls.com

LAN Cable Processing Series

KLS17-LCP-03 (UTP CAT.5E Cable)

Connector A: UTP CAT .5E RJ45 Plug Type (KLS12-RJ45-8P8C)
Connector B: UTP CAT .5E RJ45 Plug Type (KLS12-RJ45-8P8C)
Cable Length:1.50 Metre
Cable type: XX
Cable Color:Black



Order Information

Product No.: KLS17-LCP-03-1.50M-L-XX

- Part No.
- Series No.
- Cable Length:1.50M and other Length
- Cable Color: L=Blue B=Black E=Beige Y=Yellow G=Green R=Red
- XX: Cable type

KLS electronic
www.cnkls.com

LAN Cable Processing Series

KLS17-LCP-04 (STP CAT.5E Cable)

Connector A: STP CAT .5E RJ45 Plug Type (KLS12-RJ45B-8P8C)
Connector B: STP CAT .5E RJ45 Plug Type (KLS12-RJ45B-8P8C)
Cable Length:1.50 Metre
Cable type: XX
Cable Color:Beige



Order Information

Product No.: KLS17-LCP-04-1.50M-L-XX

- Part No.
- Series No.
- Cable Length:1.50M and other Length
- Cable Color: L=Blue B=Black E=Beige Y=Yellow G=Green R=Red
- XX: Cable type

LAN Cable Processing Series

KLS17-LCP-05 (STP CAT.5E Cable)

Connector A: STP CAT .5E RJ45 Plug Type (KLS12-RJ45B-8P8C)
Connector B: STP CAT .5E RJ45 Plug Type (KLS12-RJ45B-8P8C)
Cable Length:1.50 Metre
Cable type: XX
Cable Color:Beige

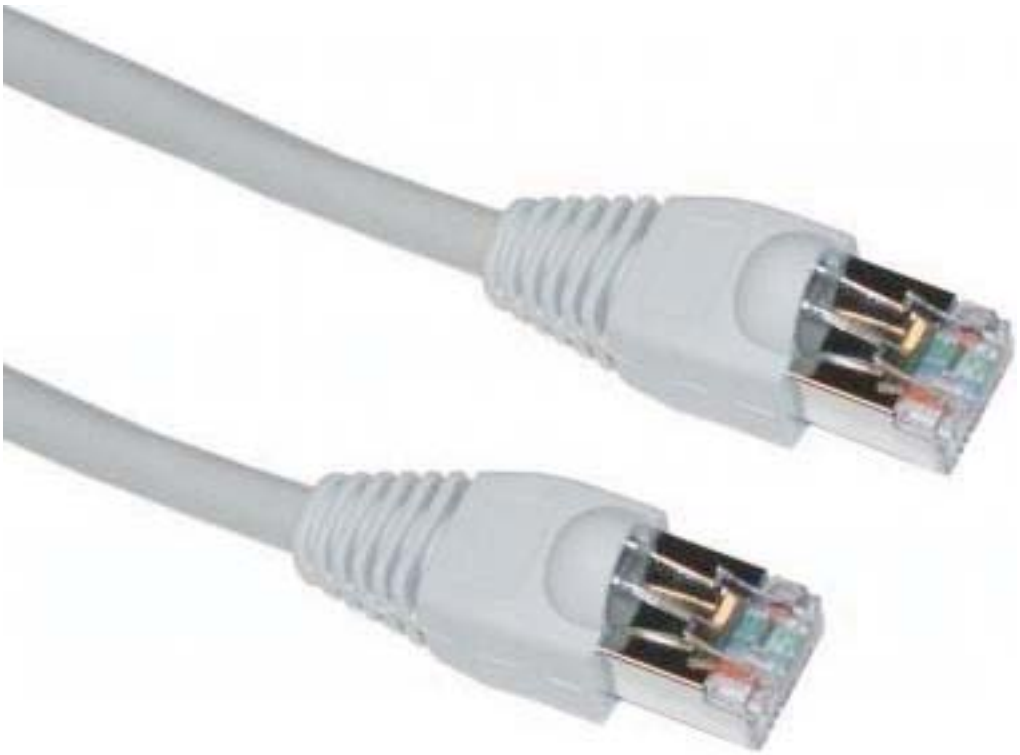

Order Information

Product No.: KLS17-LCP-05-1.50M-L-XX

- Part No.
- Series No.
- Cable Length:1.50M and other Length
- Cable Color: L=Blue B=Black E=Beige Y=Yellow G=Green R=Red
- XX: Cable type

LAN Cable Processing Series

KLS17-LCP-06 (STP CAT.5E Cable)

Connector A: STP CAT .5E RJ45 Plug Type (KLS12-RJ45B-8P8C)
Connector B: STP CAT .5E RJ45 Plug Type (KLS12-RJ45B-8P8C)
Cable Length:1.50 Metre
Cable type: XX
Cable Color:Green

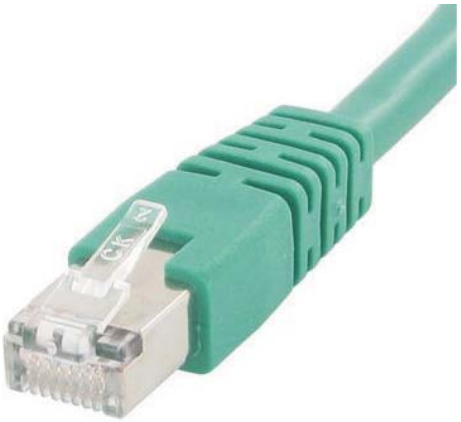

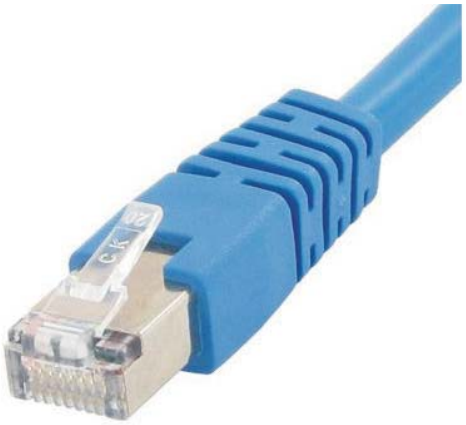

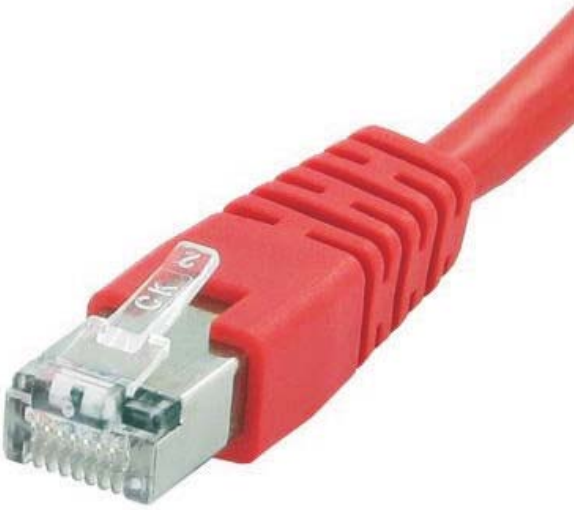



Order Information

Product No.: KLS17-LCP-05-1.50M-L-XX

Part No.
Series No.
Cable Length:1.50M and other Length
Cable Color: L=Blue B=Black E=Beige
Y=Yellow G=Green R=Red
XX: Cable type

LAN Cable Processing Series

KLS17-LCP-07 (UTP CAT6 Cable)

Connector A: UTP CAT6 RJ45 Plug Type (KLS12-MP01-CAT6-8P8C)
Connector B: UTP CAT6 RJ45 Plug Type (KLS12-MP01-CAT6-8P8C)
Cable Length:1.50 Metre
Cable type: XX
Cable Color:Beige



Order Information

Product No.: KLS17-LCP-07-1.50M-L-XX

- Part No.
- Series No.
- Cable Length:1.50M and other Length
- Cable Color: L=Blue B=Black E=Beige Y=Yellow G=Green R=Red
- XX: Cable type

LAN Cable Processing Series

KLS17-LCP-08 (UTP CAT6 Cable)

Connector A: UTP CAT6 RJ45 Plug Type (KLS12-MP01-CAT6-8P8C)
Connector B: UTP CAT6 RJ45 Plug Type (KLS12-MP01-CAT6-8P8C)
Cable Length:1.50 Metre
Cable type: XX
Cable Color:Beige

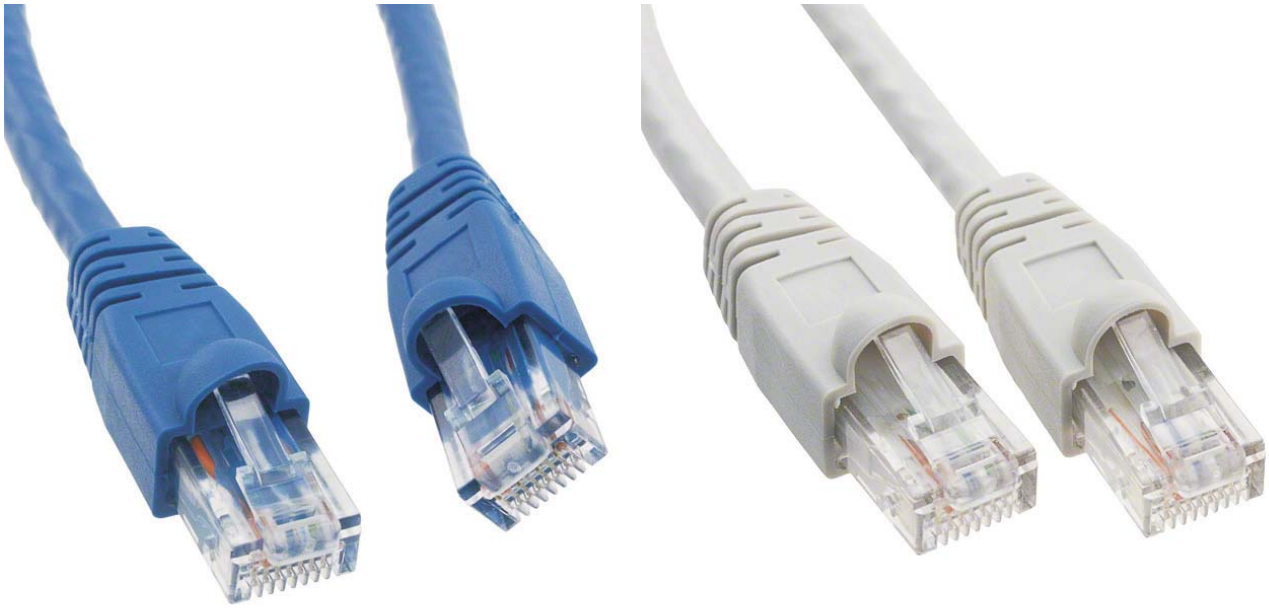

Order Information

Product No.: KLS17-LCP-08-1.50M-L-XX

Part No.
Series No.
Cable Length:1.50M and other Length
Cable Color: L=Blue B=Black E=Beige
Y=Yellow G=Green R=Red
XX: Cable type

LAN Cable Processing Series

KLS17-LCP-09 (UTP CAT6 Cable)

Connector A: UTP CAT6 RJ45 Plug Type (KLS12-MP01-CAT6-8P8C)
Connector B: UTP CAT6 RJ45 Plug Type (KLS12-MP01-CAT6-8P8C)
Cable Length:1.50 Metre
Cable type: XX
Cable Color:Blue

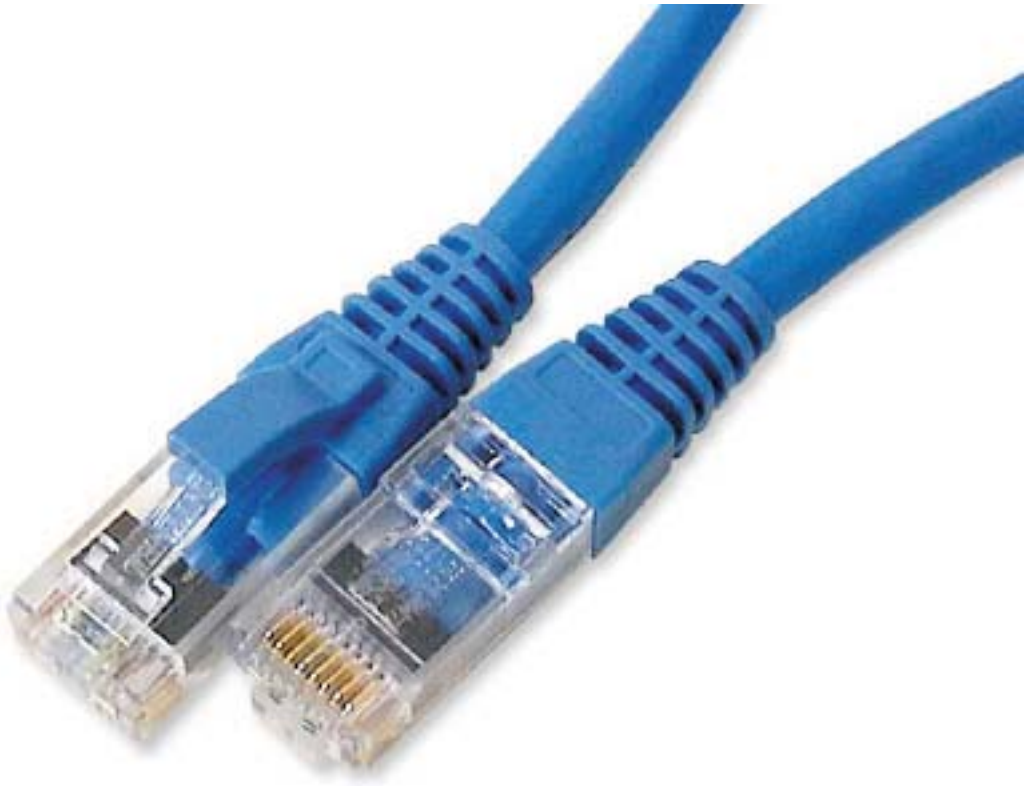

Order Information

Product No.: KLS17-LCP-09-1.50M-L-XX

Part No.
Series No.
Cable Length:1.50M and other Length
Cable Color: L=Blue B=Black E=Beige
Y=Yellow G=Green R=Red
XX: Cable type

LAN Cable Processing Series

KLS17-LCP-10 (STP CAT6 Cable)

Connector A: STP CAT6 RJ45 Plug Type (KLS12-MP01-CAT6-8P8C)
Connector B: STP CAT6 RJ45 Plug Type
Cable Length:1.50 Metre
Cable type: XX
Cable Color:Yellow



Order Information

Product No.: KLS17-LCP-10-1.50M-L-XX

Part No.
Series No.
Cable Length:1.50M and other Length
Cable Color: L=Blue B=Black E=Beige
Y=Yellow G=Green R=Red
XX: Cable type

LAN Cable Processing Series

KLS17-LCP-11 (STP CAT6 Cable)

Connector A: STP CAT6 RJ45 Plug Type (KLS12-MP01-CAT6-8P8C)
Connector B: STP CAT6 RJ45 Plug Type
Cable Length:1.50 Metre
Cable type: XX
Cable Color:Beige

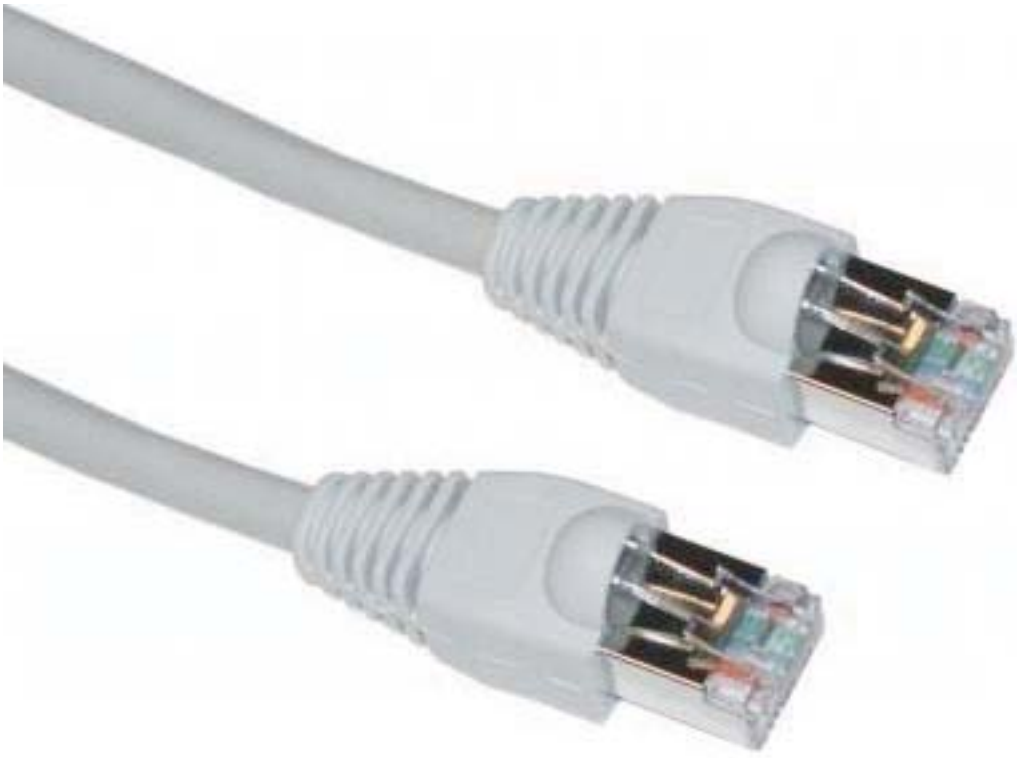

Order Information

Product No.: KLS17-LCP-11-1.50M-L-XX

Part No.
Series No.
Cable Length:1.50M and other Length
Cable Color: L=Blue B=Black E=Beige
Y=Yellow G=Green R=Red
XX: Cable type

LAN Cable Processing Series

KLS17-LCP-12 (STP CAT6 Cable)

Connector A: STP CAT6 RJ45 Plug Type (KLS12-MP01-CAT6-8P8C)
Connector B: STP CAT6 RJ45 Plug Type
Cable Length:1.50 Metre
Cable type: XX
Cable Color:Beige

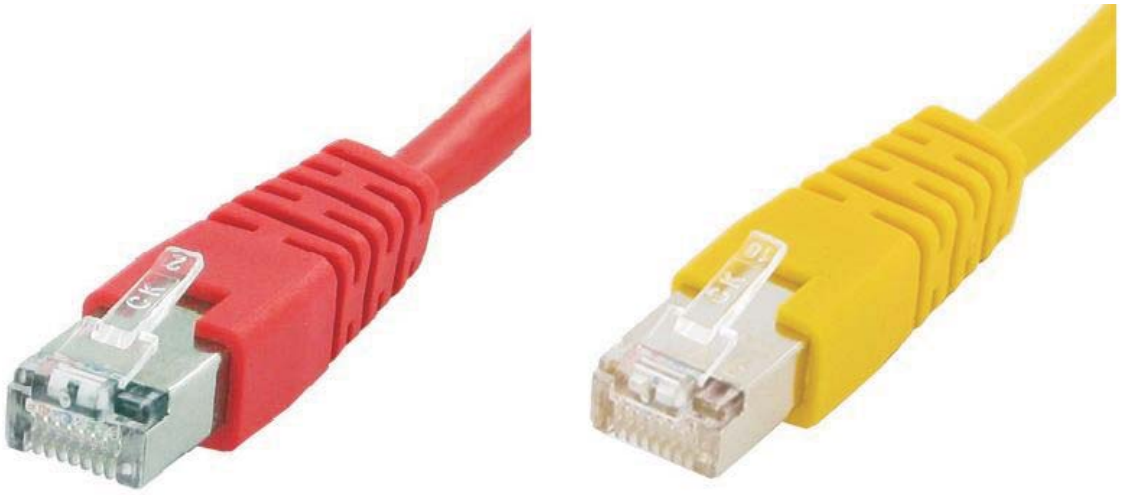

Order Information

Product No.: KLS17-LCP-12-1.50M-L-XX

Part No.
Series No.
Cable Length:1.50M and other Length
Cable Color: L=Blue B=Black E=Beige
Y=Yellow G=Green R=Red
XX: Cable type

LAN Cable Processing Series

KLS17-LCP-20

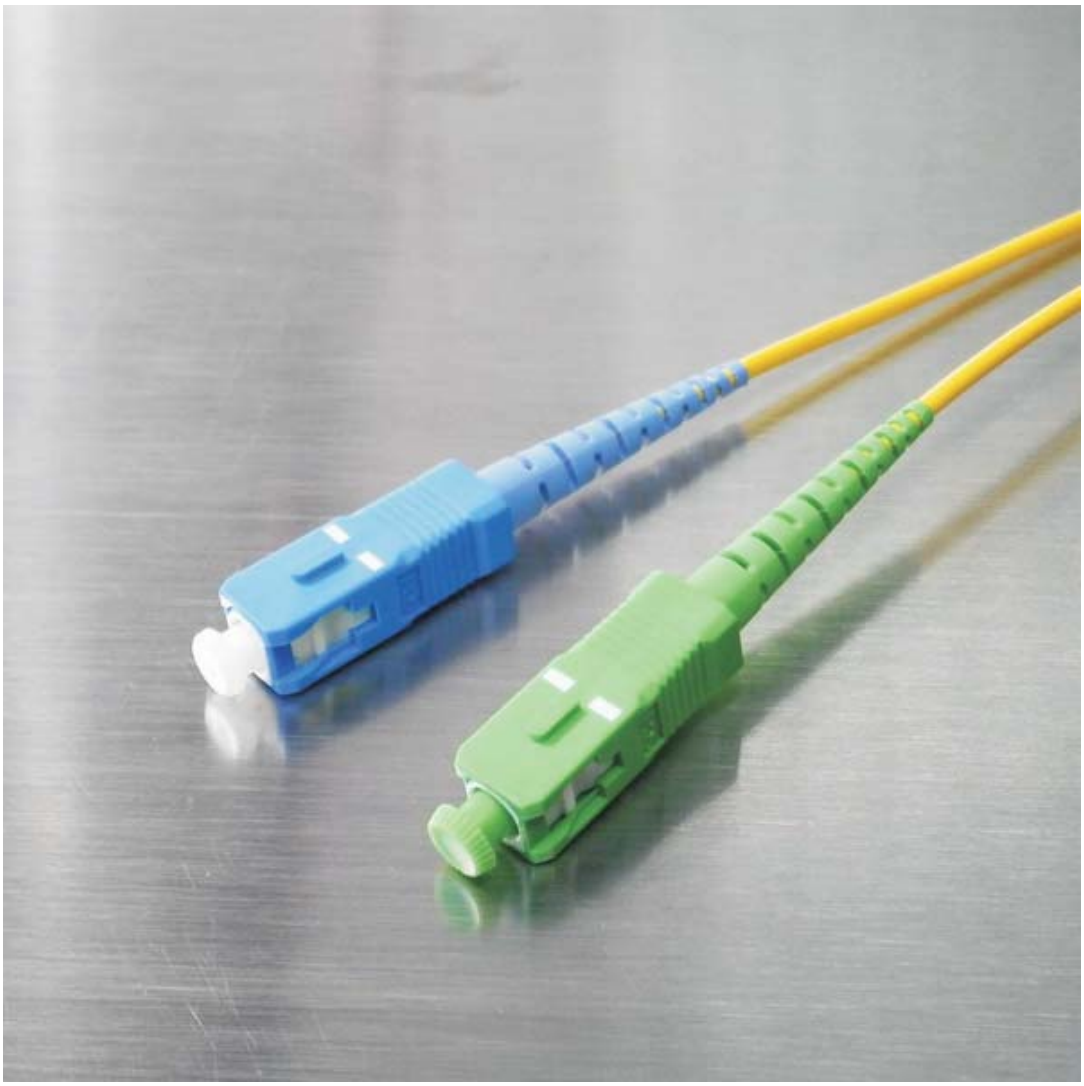

Order Information

Product No.: KLS17-LCP-20

Part No.
Series No.

LAN Cable Processing Series

KLS17-LCP-21



Order Information

Product No.: KLS17-LCP-21

Part No.
Series No.

LAN Cable Processing Series

KLS17-LCP-22



Order Information

Product No.: KLS17-LCP-22

Part No.
Series No.

Phone Cord Cable Processing Series

KLS17-PCP-01 (RJ11 Phone Cable)

Connector A: RJ11 Plug Type (KLS12-RJ11-4P4C)
Connector B: RJ11 Plug Type (KLS12-RJ11-4P4C)
Cable Length:1.50 Metre
Cable type: XX
Cable Color:Red



Order Information

Product No.: KLS17-PCP-01-1.50M-R-XX

- Part No.
- Series No.
- Cable Length:1.50 M and other Length
- Cable Color: W=White B=Black E=Beige R=Red
- XX: Cable type

Phone Cord Cable Processing Series

KLS17-PCP-02 (RJ12 Phone Cable)

Connector A: RJ12 Plug Type (KLS12-RJ12-6P6C)
Connector B: RJ12 Plug Type (KLS12-RJ12-6P6C)
Cable Length:1.50 Metre
Cable type: XX
Cable Color:Gray



Order Information

Product No.: KLS17-PCP-02-6P6C-1.50M-B-XX

- Part No.
- Series No.
- 6P6C 6P4C 6P2C Type
- Cable Length:1.50 M and other Length
- Cable Color: W=White B=Black E=Beige R=Red
- XX: Cable type

Phone Cord Cable Processing Series

KLS17-PCP-03 (RJ12 Phone Cable)

Connector A: RJ12 Plug Type (KLS12-RJ12-6P6C)
Connector B: RJ12 Plug Type (KLS12-RJ12-6P6C)
Cable Length:1.50 Metre
Cable type: XX
Cable Color:Gray



Order Information

Product No.: KLS17-PCP-03-6P6C-1.50M-B-XX

- Part No.
- Series No.
- 6P6C 6P4C 6P2C Type
- Cable Length:1.50 M and other Length
- Cable Color: W=White B=Black E=Beige R=Red
- XX: Cable type

KLS electronic
www.cnkls.com

Phone Cord Cable Processing Series

KLS17-PCP-04 (RJ12 Phone Cable)

Connector A: RJ12 Plug Type (KLS12-RJ12-6P6C)
Connector B: RJ12 Plug Type (KLS12-RJ12-6P6C)
Cable Length:1.50 Metre
Cable type: XX
Cable Color:Gray

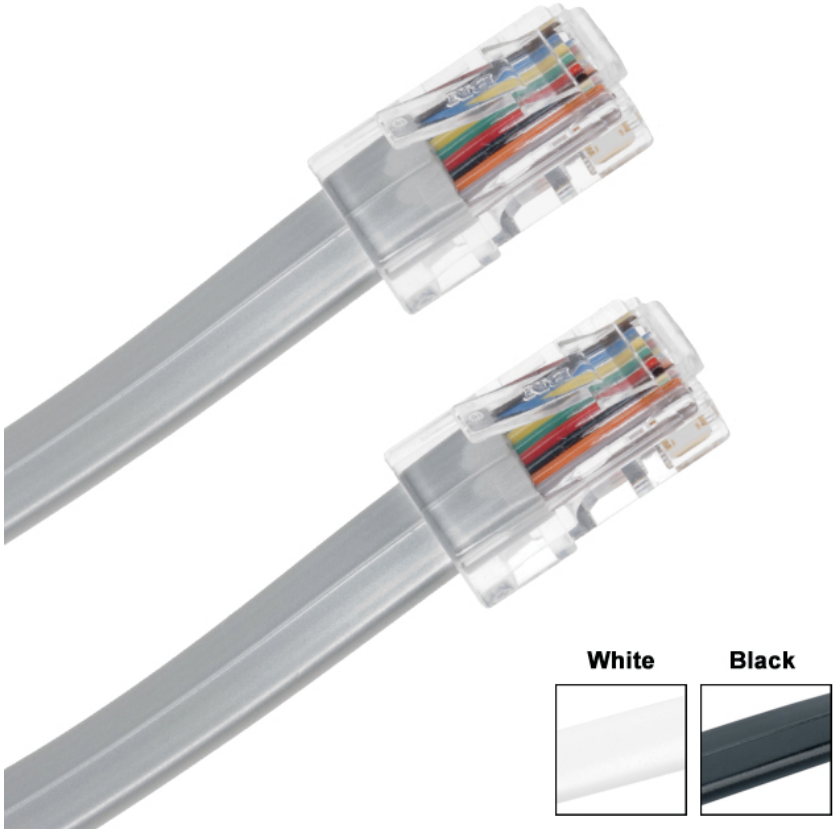

Order Information

Product No.: KLS17-PCP-04-6P6C-1.50M-B-XX

- Part No.
- Series No.
- 6P6C 6P4C 6P2C Type
- Cable Length:1.50 M and other Length
- Cable Color: W=White B=Black E=Beige R=Red
- XX: Cable type

Phone Cord Cable Processing Series

KLS17-PCP-05 (RJ45 Phone Cable)

Connector A: RJ45 Plug Type (KLS12-RJ45-8P8C)
Connector B: RJ45 Plug Type (KLS12-RJ45-8P8C)
Cable Length:1.50 Metre
Cable type: XX
Cable Color:Black



Order Information

Product No.: KLS17-PCP-05-8P8C-1.50M-L-XX

- Part No.
- Series No.
- 6P6C 6P4C 6P2C Type
- Cable Length:1.50 M and other Length
- Cable Color: W=White B=Black E=Beige R=Red
- XX: Cable type

KLS electronic
www.cnkls.com

Phone Cord Cable Processing Series

KLS17-PCP-06 (RJ11 Phone Cable)

Connector A: RJ45 Plug Type (KLS12-RJ45-8P8C)
Connector B: RJ45 Plug Type (KLS12-RJ45-8P8C)
Cable Length:1.50 Metre
Cable type: XX
Cable Color:Black



Order Information

Product No.: KLS17-PCP-06-1.50M-R-XX

- Part No.
- Series No.
- Cable Length:1.50M and other Length
- Cable Color: W=White B=Black E=Beige R=Red
- XX: Cable type

KLS electronic
www.cnkls.com

Phone Cord Cable Processing Series

KLS17-PCP-07 (RJ11 Phone Cable)

Connector A: RJ11 Plug Type (KLS12-RJ11-4P4C)
Connector B: RJ11 Plug Type (KLS12-RJ11-4P4C)
Cable Length:1.50 Metre
Cable type: XX
Cable Color:Beige



Order Information

Product No.: KLS17-PCP-07-1.50M-E-XX

- Part No.
- Series No.
- Cable Length:1.50M and other Length
- Cable Color: W=White B=Black E=Beige R=Red
- XX: Cable type

Phone Cord Cable Processing Series

KLS17-PCP-08 (RJ12 Phone Cable)

Connector A: RJ12 Plug Type (KLS12-RJ12-6P4C)
Connector B: RJ12 Plug Type (KLS12-180-6P4C)
Cable Length:1.50 Metre
Cable type: XX
Cable Color:Beige



Order Information

Product No.: KLS17-PCP-08-6P4C-1.50M-B-XX

- Part No.
- Series No.
- 6P6C 6P4C 6P2C Type
- Cable Length:0.50M and other Length
- Cable Color: W=White B=Black E=Beige R=Red
- XX: Cable type

Phone Cord Cable Processing Series

KLS17-PCP-09 (CAT6 RJ45 Cable)

Connector A: CAT6 RJ45 Plug Type (KLS12-MP01-CAT6-8P8C)
Connector B: CAT6 RJ45 Plug Type (KLS12-MP01-CAT6-8P8C)
Cable Length:1.50 Metre
Cable type: XX
Cable Color:Black



Order Information

Product No.: KLS17-PCP-09-1.50M-B-XX

Part No.
Series No.
Cable Length:1.50M and other Length
Cable Color: W=White B=Black
E=Beige R=Red L=Blue
XX: Cable type

KLS electronic
www.cnkls.com

D-SUB / VGA Cable Processing Series

KLS17-DCP-01

Connector A: DB9P Female Type (KLS1-213)
Connector B: DB925P Male Type (KLS1-213)
Cable Length:1.50 Metre
Hood And Cable Color:Beige
Cable type: XX



KLS17-DCP-01-9F/9F



Order Information

Product No.: KLS17-DCP-01-9F/25M-1.50M-E-XX

- Part No.
- Series No.
- Pin/Pin:9/9,9/25,15/15,15/25,25/25
  F=Female/M=Male : F/M Or M/M Or F/F
- Cable Length:1.5M and other Length
- Hood And Cable Color: L=Blue B=Black E=Beige
- XX: Cable type

D-SUB / VGA Cable Processing Series

KLS17-DCP-02

Connector A: DB9P Male Type (KLS1-213)
Connector B: DB9P Female Type (KLS1-213)
Cable Length:1.50 Metre
Hood And Cable Color:Beige
Cable type: XX



KLS17-DCP-02-25F/9M:

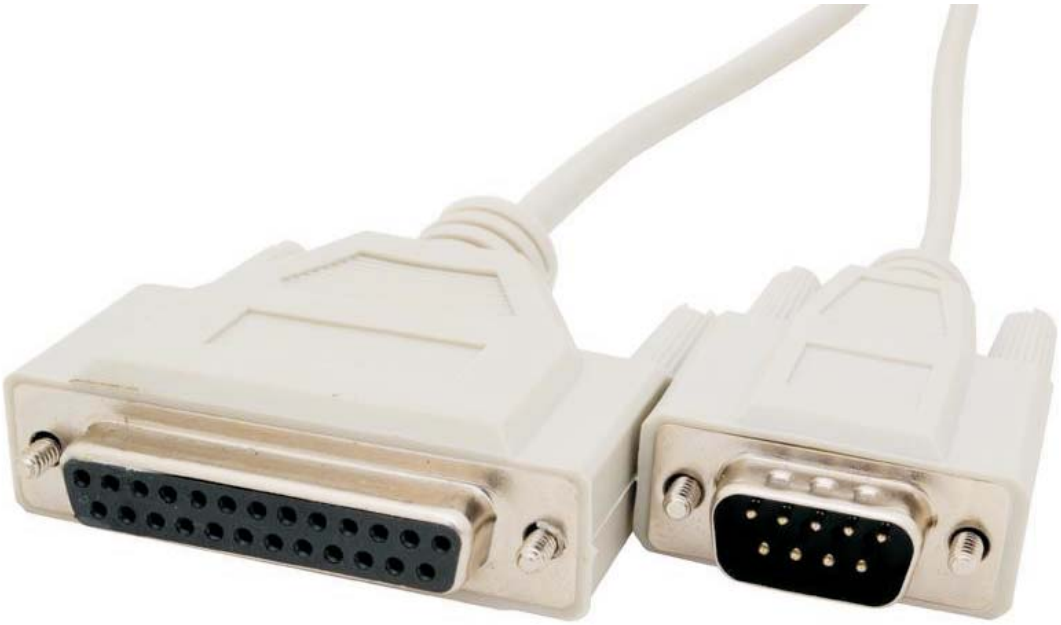

Order Information

Product No.: KLS17-DCP-02- 9F/9M -1.50M-E-XX

Part No.
Series No.
Pin/Pin:9/9,9/25,15/15,15/25,25/25
F=Female/M=Male : F/M Or M/M Or F/F
Cable Length:1.5M and other Length
Hood And Cable Color: L=Blue B=Black E=Beige
XX: Cable type

D-SUB / VGA Cable Processing Series

KLS17-DCP-03 (VGA To VGA Cable)

Connector A: HD15P Male Type (KLS1-214)
Connector B: HD15P Male Type (KLS1-214)
Cable Length:1.50 Metre
Hood And Cable Color:Black
Cable type: XX



KLS17-DCP-03-15M/15M Beige:



Order Information

Product No.: KLS17-DCP-03-15M/15M-1.50M-E-Y-XX

- **Part No.**
- **Series No.**
- **Pin/Pin:9/9,9/25,15/15,15/25,25/25**
  F=Female/M=Male : F/M Or M/M Or F/F
- **Cable Length:1.5M and other Length**
- **Cable Color: L=Blue B=Black E=Beige**
- **Hood And Cable Color: L=Blue B=Black E=Beige**
- **XX: Cable type**

D-SUB / VGA Cable Processing Series

KLS17-DCP-04

Connector A: DB15P Male Type (KLS1-213)
Connector B: DB15P Female Type (KLS1-213)
Cable Length:1.50 Metre
Cable Color:Beige
Cable type: XX



KLS17-DCP-04-9M/25M:

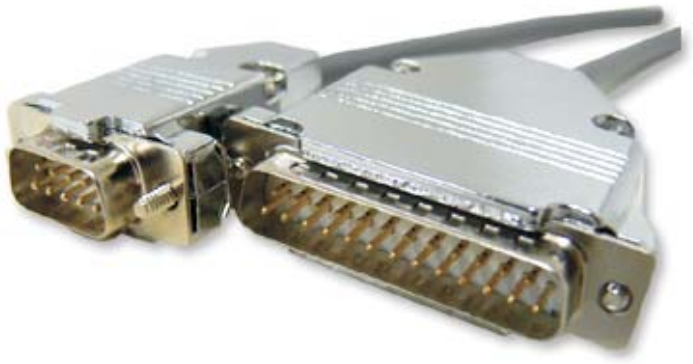

Hood Choice: METAL HOOD (KLS1-DBF) Or PLASTIC HOOD Chromium plated (PLASTIC platedKLS1-DBJ)

Order Information

Product No.: KLS17-DCP-04-15F/15M-1.50M-E-XX

Part No.
Series No.
Pin/Pin:9/9,9/25,15/15,15/25,25/25
F=Female/M=Male : F/M Or M/M Or F/F
Cable Length:1.5M and other Length
Hood And Cable Color: L=Blue B=Black E=Beige
XX: Cable type

D-SUB / VGA Cable Processing Series

KLS17-DCP-05 (VGA To VGA Cable)

Connector A: HD15P Male Type (KLS1-214)
Connector B: HD15P Male Type (KLS1-214)
Cable Length:1.50 Metre
Cable Color:Black
Cable type: XX

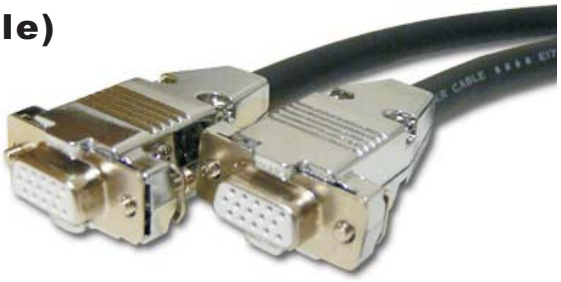

KLS17-DCP-05-15M/15F :



Hood Choice: METAL HOOD (KLS1-DBF) Or PLASTIC HOOD Chromium plated (PLASTIC platedKLS1-DBJ)

Order Information

Product No.: KLS17-DCP-05-15M/15M-1.50M-B-N-XX

- **Part No.**
- **Series No.**
- **Pin/Pin:15/15**
  F=Female/M=Male : F/M Or M/M Or F/F
- **Cable Length:1.5M and other Length**
- **Cable Color: L=Blue B=Black E=Beige**
- **Ferrite Core Optional:Y=With N=Without**
- **XX: Cable type**

D-SUB / VGA Cable Processing Series

KLS17-DCP-06

Connector A: DB9P Female Type (KLS1-213)
Connector B: Cat5e RJ45 Plug Type (KLS12-RJ45-8P8C)
Cable Length:1.50 Metre
Cable Color:Beige
Cable type: XX



Hood Choice:METAL HOOD (KLS1-DBF) Or PLASTIC HOOD Chromium plated (PLASTIC platedKLS1-DBJ)

Order Information

Product No.: KLS17-DCP-06-15F-1.50M-E-XX

- **Part No.**
- **Series No.**
- **DB Pin: 9,15,25Pins**
- **M-Male F-Female**
- **Cable Length:1.50M and other Length**
- **Cable Color: L=Blue B=Black E=Beige**
- **XX: Cable type**

D-SUB / VGA Cable Processing Series

KLS17-DCP-07

Features:
- USB 2.0 for faster data transfer speeds
- Also compatible with USB 1.1 and 1.0 devices

This USB 2.0 Type Cable is perfect for connecting between your computer and a peripheral device with a USB 2.0 (or USB 1.1 / 1.0) connection, such as an external hard drive (HDD), printer, scanner, camera, video camera, or any other device which has a USB Type A connection.

Connector A: DB9P Male Type (KLS1-213)
Connector B: USB 2.0 A Male Type (KLS1-182)
Cable Length:1.5 Metre
Hood And Cable Color: Beige
Cable type: XX



Order Information

Product No.: KLS17-DCP-07-2.0-9M-1.50M-E-N-XX

- **Part No.**
- **Series No.**
- **USB Connector type:2.0,1.1,1.0**
- **DB Pin: 9,15,25Pins**
- **M-Male F-Female**
- **Cable Length:1.50M and other Length**
- **Cable Color: L=Blue B=Black E=Beige**
- **Ferrite Core Optional:Y=With N=Without**
- **XX: Cable type**

D-SUB / VGA Cable Processing Series

KLS17-DCP-08

Connector A: DB9P Female Type (KLS1-213)
Connector B: USB 2.0 A Male Type (KLS1-182) and Cat5e RJ45 Plug Type (KLS12-RJ45-8P8C)
Cable Length:1.50 Metre
Hood And Cable Color:Black
Cable type: XX



Order Information

Product No.: KLS17-DCP-08- 2.0-9F- 1.50M-B-N-XX

- **Part No.**
- **Series No.**
- **USB Connector type:2.0,1.1,1.0**
- **DB Pin: 9,15,25Pins**
- **M-Male F-Female**
- **Cable Length:1.50M and other Length**
- **Cable Color: L=Blue B=Black E=Beige**
- **Ferrite Core Optional:Y=With N=Without**
- **XX: Cable type**

D-SUB / VGA Cable Processing Series

KLS17-DCP-09

Connector A: DB9P Female Type (KLS1-213)
Connector B: Mini Din Male Plug Type (KLS1-294)
Cable Length:1.50 Metre
Hood And Cable Color:Beige
Cable type: XX



Order Information

Product No.: KLS17-DCP-09- 9F/7M - 1.50M-E-XX

Part No.
Series No.
9F=DB 9 Pins Female (M=Male,F=Female)
7M=Mini Din Pins:3-8 Pins Male (M=Male,F=Female)
Cable Length:1.5M and other Length
Hood And Cable Color: L=Blue B=Black E=Beige
XX: Cable type

KLS electronic
www.cnkls.com

D-SUB / VGA Cable Processing Series

KLS17-DCP-10 (VGA To Mini Din)

Connector A: HD15P Male Type(KLS1-214) And Two Mini Din Male Type (KLS1-294)
Connector B: HD15P Female Type(KLS1-214) And Two Mini Din Male Type (KLS1-294)
Cable Length:1.50 Metre
DB Hood Color:Blue
Cable Color:Beige
Cable type: XX



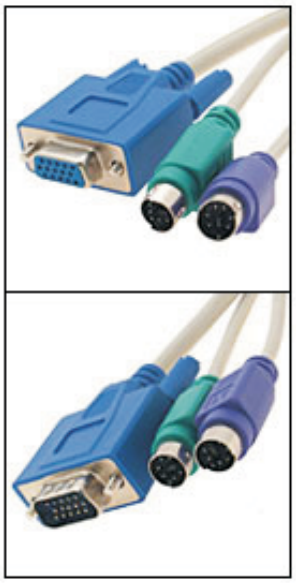

Order Information

Product No.: KLS17-DCP-10-6M-1.50M-L-E-N-XX

- **Part No.**
- **Series No.**
- **6M= Mini Din Pins:3-8 Pins Male**
- **Cable Length:1.50M and other Length**
- **DB Hood Color: L=Blue B=Black E=Beige**
- **Cable Color: L=Blue B=Black E=Beige**
- **Ferrite Core Optional:Y=With N=Without**
- **XX: Cable type**

D-SUB / VGA Cable Processing Series

KLS17-DCP-11 (VGA To Mini Din)

Connector A: HD15P Male Type(KLS1-214) And Two Mini Din Male Type (KLS1-294)
Connector B: HD15P Female Type(KLS1-214) And Two Mini Din Male Type (KLS1-294)
Cable Length:1.50 Metre
DB Hood Color:Beige
Cable Color:Beige
Cable type: XX



Order Information

Product No.: KLS17-DCP-11-6M-1.50M-E-E-N-XX

- **Part No.**
- **Series No.**
- **6M= Mini Din Pins:3-8 Pins Male**
- **Cable Length:1.50M and other Length**
- **DB Hood Color: L=Blue B=Black E=Beige**
- **Cable Color: L=Blue B=Black E=Beige**
- **Ferrite Core Optional:Y=With N=Without**
- **XX: Cable type**

D-SUB / VGA Cable Processing Series

KLS17-DCP-12 (VGA To Mini Din)

Connector A: HD15P Male Type(KLS1-214) And Two Mini Din Male Type (KLS1-294)
Connector B: HD15P Female Type(KLS1-214) And Two Mini Din Male Type (KLS1-294)
Cable Length:1.50 Metre
DB Hood Color:Blue
Cable Color:Beige
Cable type: XX



Order Information

Product No.: KLS17-DCP-12-6M-1.50M-L-E-N-XX

- **Part No.**
- **Series No.**
- **6M= Mini Din Pins:3-8 Pins Male**
- **Cable Length:1.50M and other Length**
- **DB Hood Color: L=Blue B=Black E=Beige**
- **Cable Color: L=Blue B=Black E=Beige**
- **Ferrite Core Optional:Y=With N=Without**
- **XX: Cable type**

KLS electronic
www.cnkls.com

D-SUB / VGA Cable Processing Series

KLS17-DCP-13 (SCSI to VGA cable)



Order Information

Product No.: KLS17-DCP-13

Part No.
Series No.

D-SUB / VGA Cable Processing Series

KLS17-DCP-14 (VGA To VGA Cable)

Connector A: 1 x HD15P Male Type (KLS1-214)
Connector B: 2 x HD15P Female Type (KLS1-214)
Cable Length:1.50 Metre
Hood And Cable Color:Black
Cable type: XX



Order Information

Product No.: KLS17-DCP-14-15M/2x15F-1.50M-E-N-XX

- **Part No.**
- **Series No.**
- **Pin/Pin:15/15**
- **F=Female/M=Male : F/M Or M/M Or F/F**
- **Cable Length:1.50M and other Length**
- **DB Hood Color: L=Blue B=Black E=Beige**
- **Ferrite Core Optional:Y=With N=Without**
- **XX: Cable type**

KLS electronic
www.cnkls.com

D-SUB / VGA Cable Processing Series

KLS17-DCP-15 (VGA To BNC And Mini Din)

Connector A: HD15P Male Type(KLS1-214)
Connector B: 4xBNC Male Type And 1x Mini Din (KLS1-294)
Cable Length:1.50 Metre
Hood Color:Beige
Cable Color:xxxxx
Cable



Order Information

Product No.: KLS17-DCP-15-6F-1.50M-E-XXXXX-N-XX

- **Part No.**
- **Series No.**
- **6F= Mini Din Pins:3-8 Pins Male Or Female**
- **Cable Length:1.50M and other Length**
- **Hood Color: L=Blue B=Black E=Beige**
- **Cable Color: L=Blue B=Black E=Beige**
- **Ferrite Core Optional:Y=With N=Without**
- **XX: Cable type**

D-SUB / VGA Cable Processing Series

KLS17-DCP-16 (VGA To BNC)



Connector A: 1xHD15P Male Type (KLS1-214)
Connector B: 8xBNC Female Type
Cable Length:1.50 Metre
Hood And Cable Color:Black
Cable type: XX

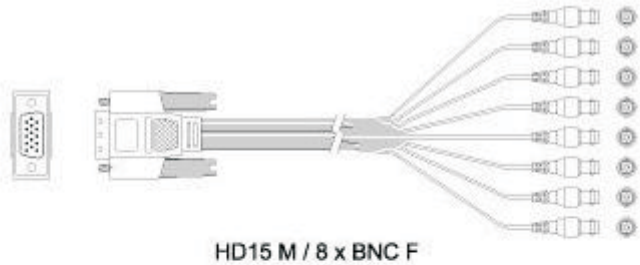

HD15 M / 8 x BNC F

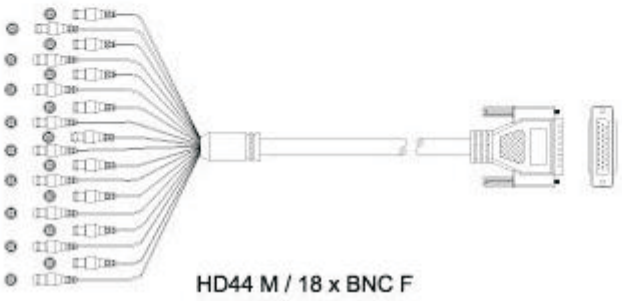

HD44 M / 18 x BNC F

Order Information

Product No.: KLS17-DCP-16-15M/8F-1.50M-B-N-XX

Part No.
Series No.
15M=DB 15,26,44Pins Male Or Female
8F=8 PCS BNC Female or Optional pin
Cable Length:1.50M and Other Length
Hood And Cable Color: L=Blue B=Black E=Beige
Ferrite Core Optional:Y=With N=Without
XX: Cable type

KLS electronic
www.cnkls.com

D-SUB / VGA Cable Processing Series

KLS17-DCP-17 (VGA To BNC)

Connector A: 1xHD15P Male Type (KLS1-214)
Connector B: 5xBNC Female Type
Cable Length:1.50 Metre
Hood And Cable Color:Beige
Cable type: XX

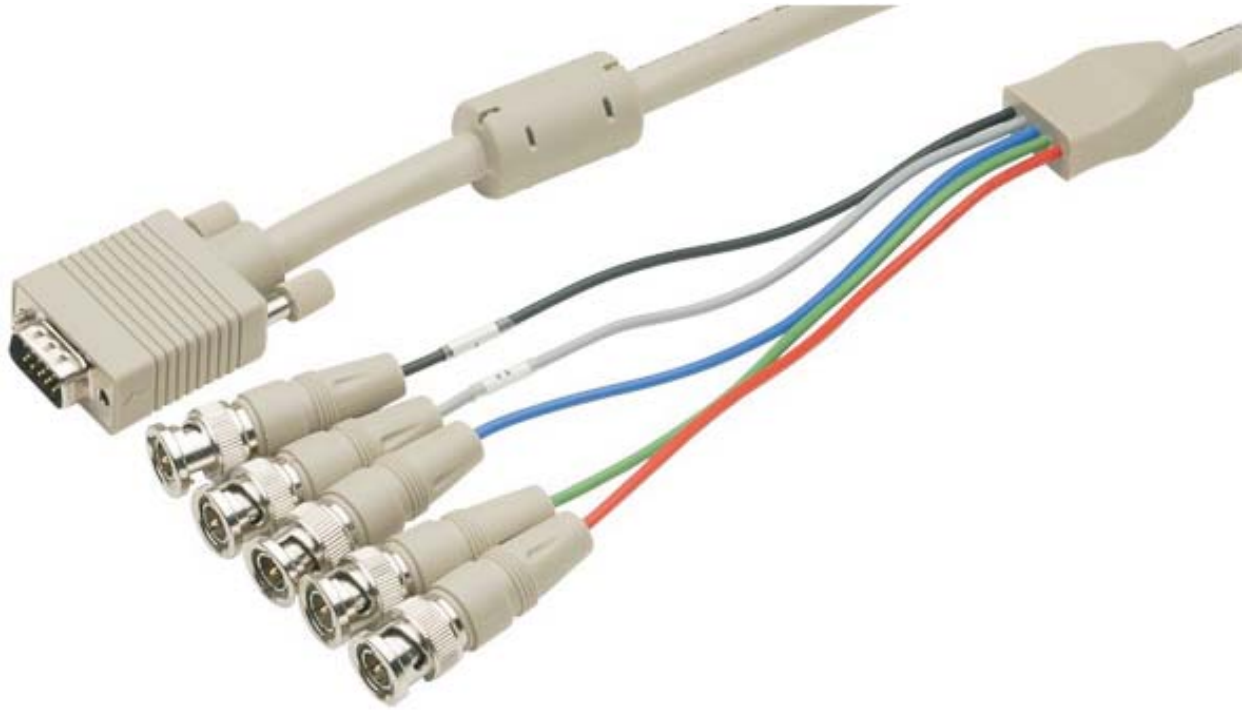

Order Information

Product No.: KLS17-DCP-17-15M/5F-1.50M-E-Y-XX

Part No.
Series No.
15M=DB 15,26,44Pins, Male Or Female /
5F=5 PCS BNC Male or Optional pin
Cable Length:1.50M and Other Length
Hood And Cable Color: L=Blue B=Black E=Beige
Ferrite Core Optional:Y=With N=Without
XX: Cable type

D-SUB / VGA Cable Processing Series

KLS17-DCP-18 (VGA To BNC)

Connector A: 1xHD15P Male Type (KLS1-214)
Connector B: 5xBNC Female Type
Cable Length:1.50 Metre
Hood And Cable Color:Black
Cable type: XX



Order Information

Product No.: KLS17-DCP-18-15M/5F-1.50M-B-Y-XX

Part No.
Series No.
15M=DB 15,26,44Pins, Male Or Female /
5F=5 PCS BNC Male or Optional pin
Cable Length:1.50M and Other Length
Hood And Cable Color: L=Blue B=Black E=Beige
Ferrite Core Optional:Y=With N=Without
XX: Cable type

D-SUB / VGA Cable Processing Series

KLS17-DCP-19 (SCSI To RCA)

Connector A: 1xSCSI 14P Male Type (KLS1-SCSI-03)
Connector B: 3xRCA Plug Female Type (KLS1-RCA-PM40)
Cable Length:1.50 Metre
Hood And Cable Color:Black
Cable type: XX





Order Information

Product No.: KLS17-DCP-19-14F/PM40-BGR-3-1.50M-B-XX

- **Part No.**
- **Series No.**
- **14F=SCSI 14Pin Female**
- **Connector position: PM40-BGR-3**
- **Cable Length:1.50M and Other Length**
- **Hood And Cable Color: L=Blue B=Black E=Beige**
- **XX: Cable type**

D-SUB / VGA Cable Processing Series

KLS17-DCP-20 (VGA To RCA)

Connector A: 1xHD15P Male Type (KLS1-214)
Connector B: 1xMini Din Male And 1x RCA Socket Type Type
Cable Length:1.50 Metre
Cable Color:Beige
Cable type: XX



Order Information

Product No.: KLS17-DCP-18-1.50M-N-XX

- **Part No.**
- **Series No.**
- **Cable Length:1.50M and Other Length**
- **Ferrite Core Optional:Y=With N=Without**
- **XX: Cable type**

D-SUB / VGA Cable Processing Series

KLS17-DCP-21 (VGA To RCA)

Connector A: 1xHD15P Male Type (KLS1-214)
Connector B: 3xRCA Plug Female Type (KLS1-RCA-PM40)
Cable Length:1.50 Metre
Cable Color:Black
Cable type: XX



Order Information

Product No.: KLS17-DCP-21-15M/PM40-BGR-3-1.50M-B-N-XX

Part No.
Series No.
15M=HD 15 Pin Male or Female
Connector position: PM40-BGR-3
Cable Length:1.50M and Other Length
Hood And Cable Color: L=Blue B=Black E=Beige
Ferrite Core Optional:Y=With N=Without
XX:Cable type

MONO Plug / Stereo Plug Cable Processing Series

KLS17-PLGP-001A (Stereo Plug To Stereo Plug)

Connector A: Stereo Plug Type (KLS1-PLG-001A)
Connector B: Stereo Plug Type (KLS1-PLG-001A)
Cable Length:1.50 Metre
Cable type: XX



Order Information

KLS17-PLGP-001A-3.5-N-B-1.50M-XX
Connector position: PLG-001A-3.5-N-B
Cable Length: 1.50M and Other Length
Cable type: XX

Remark: Optional Mono Plug / Stereo Plug Series other Models Cable processing

---

Connector position :

KLS's Part No.	Description
KLS1-PLG-001A-2.5-N-B	2.5MM Stereo plug / Nickel-plated / Black color
KLS1-PLG-001A-2.5-G-R	2.5MM Stereo plug / Gold-plated / Red color
KLS1-PLG-001A-3.5-N-B	3.5MM Stereo plug / Nickel-plated / Black color
KLS1-PLG-001A-3.5-G-R	3.5MM Stereo plug / Gold-plated / Red color
KLS1-PLG-001A-6.3-N-B	6.3MM Stereo plug / Nickel-plated / Black color
KLS1-PLG-001A-6.3-G-R	6.3MM Stereo plug / Gold-plated / Red color

Remark: Optional gold-plated nickel And Color Optional

Order Information

Product No.: KLS17-PLGP-001A-3.5-N-B-1.50M-XX

Part No.
Connector position: PLG-001A-3.5-N-B
Cable Length:1.50M and Other Length
XX:Cable type

MONO Plug / Stereo Plug Cable Processing Series

KLS17-PLGP-001B (Stereo Plug To Stereo Plug)

Connector A: Stereo Plug Type (KLS1-PLG-001B)
Connector B: Stereo Plug Type (KLS1-PLG-001B)
Cable Length:1.50 Metre
Cable type: XX



Order Information

KLS17-PLGP-001B-3.5-N-B-1.50M-XX
Connector position: PLG-001B-3.5-N-B
Cable Length: 1.50M and Other Length
Cable type: XX

Remark: Optional Mono Plug / Stereo Plug Series other Models Cable processing

---

Connector position :

KLS's Part No.	Description
KLS1-PLG-001B-2.5-N-B	2.5MM Stereo plug / Nickel-plated / Black color
KLS1-PLG-001B-2.5-G-R	2.5MM Stereo plug / Gold-plated / Red color
KLS1-PLG-001B-3.5-N-B	3.5MM Stereo plug / Nickel-plated / Black color
KLS1-PLG-001B-3.5-G-R	3.5MM Stereo plug / Gold-plated / Red color
KLS1-PLG-001B-6.3-N-B	6.3MM Stereo plug / Nickel-plated / Black color
KLS1-PLG-001B-6.3-G-R	6.3MM Stereo plug / Gold-plated / Red color

Remark: Optional gold-plated nickel And Color Optional

Order Information

Product No.: KLS17-PLGP-001B-3.5-N-B-1.50M-XX

Part No.
Connector position: PLG-001A-3.5-N-B
Cable Length:1.50M and Other Length
XX:Cable type

MONO Plug / Stereo Plug Cable Processing Series

KLS17-PLGP-001C (Stereo Plug To Stereo Plug)

Connector A: Stereo Plug Type (KLS1-PLG-001C)
Connector B: Stereo Plug Type (KLS1-PLG-001C)
Cable Length:1.50 Metre
Cable type: XX



Order Information

KLS17-PLGP-001C-3.5-N-B-1.50M-XX
Connector position: PLG-001C-3.5-N-B
Cable Length: 1.50M and Other Length
Cable type: XX

Remark: Optional Mono Plug / Stereo Plug Series other Models Cable processing

---

Connector position :

KLS's Part No.	Description
KLS1-PLG-001C-2.5-N-B	2.5MM Stereo plug / Nickel-plated / Black color
KLS1-PLG-001C-2.5-G-R	2.5MM Stereo plug / Gold-plated / Red color
KLS1-PLG-001C-3.5-N-B	3.5MM Stereo plug / Nickel-plated / Black color
KLS1-PLG-001C-3.5-G-R	3.5MM Stereo plug / Gold-plated / Red color
KLS1-PLG-001C-6.3-N-B	6.3MM Stereo plug / Nickel-plated / Black color
KLS1-PLG-001C-6.3-G-R	6.3MM Stereo plug / Gold-plated / Red color

Remark: Optional gold-plated nickel And Color Optional

Order Information

Product No.: KLS17-PLGP-001C-3.5-N-B-1.50M-XX

Part No.
Connector position: PLG-001A-3.5-N-B
Cable Length:1.50M and Other Length
XX:Cable type

MONO Plug / Stereo Plug Cable Processing Series

KLS17-PLGP-001D (Stereo Plug To Stereo Plug)

Connector A: Stereo Plug Type (KLS1-PLG-001A)
Connector B: Stereo Plug Type (KLS1-PLS-001A)
Cable Length:1.50 Metre
Cable type: XX



Order Information

KLS17-PLGP-001D-3.5-N-B-1.50M-XX
Connector position: PLG-001A-3.5-N-B
Cable Length: 1.50M and Other Length
Cable type: XX

Remark: Optional Mono Plug / Stereo Plug Series other Models Cable processing

---

Ordering information :

KLS's Part No.	Description
KLS1-PLG-001A-2.5-N-B	2.5MM Stereo plug / Nickel-plated / Black color
KLS1-PLG-001A-2.5-G-R	2.5MM Stereo plug / Gold-plated / Red color
KLS1-PLG-001A-3.5-N-B	3.5MM Stereo plug / Nickel-plated / Black color
KLS1-PLG-001A-3.5-G-R	3.5MM Stereo plug / Gold-plated / Red color
KLS1-PLG-001A-6.3-N-B	6.3MM Stereo plug / Nickel-plated / Black color
KLS1-PLG-001A-6.3-G-R	6.3MM Stereo plug / Gold-plated / Red color

Remark: Optional gold-plated nickel And Color Optional

Order Information

Product No.: KLS17-PLGP-001D-3.5-N-B-1.50M-XX

Part No.
Connector position: PLG-001A-3.5-N-B
Cable Length:1.50M and Other Length
XX:Cable type

MONO Plug / Stereo Plug Cable Processing Series

KLS17-PLGP-001E (Stereo Plug To Stereo Plug)

Connector A: Stereo Plug Type (KLS1-PLG-001C)
Connector B: Stereo Plug Type (KLS1-PLS-001A)
Cable Length:1.50 Metre
Cable type: XX



Order Information

KLS17-PLGP-001E-3.5-G-B-1.50M-XX
Connector position: PLG-001C-3.5-N-B
Cable Length: 1.50M and Other Length
Cable type: XX

Remark: Optional Mono Plug / Stereo Plug Series other Models Cable processing

---

Ordering information :

KLS's Part No.	Description
KLS1-PLG-001C-2.5-N-B	2.5MM Stereo plug / Nickel-plated / Black color
KLS1-PLG-001C-2.5-G-R	2.5MM Stereo plug / Gold-plated / Red color
KLS1-PLG-001C-3.5-N-B	3.5MM Stereo plug / Nickel-plated / Black color
KLS1-PLG-001C-3.5-G-R	3.5MM Stereo plug / Gold-plated / Red color
KLS1-PLG-001C-6.3-N-B	6.3MM Stereo plug / Nickel-plated / Black color
KLS1-PLG-001C-6.3-G-R	6.3MM Stereo plug / Gold-plated / Red color

Remark: Optional gold-plated nickel And Color Optional

Order Information

Product No.: KLS17-PLGP-001E-3.5-G-B-1.50M-XX

Part No.
Connector position: PLG-001A-3.5-N-B
Cable Length:1.50M and Other Length
XX:Cable type

MONO Plug / Stereo Plug Cable Processing Series

KLS17-PLGP-001F (Stereo Plug To Stereo Plug)

Connector A: 1 x Stereo Plug Type (KLS1-PLG-001C)
Connector B: 2 x Stereo Plug Type (KLS1-PLS-001A)
Cable Length:1.50 Metre
Cable type: XX



Order Information

KLS17-PLGP-001F-2.5-G-B-1.50M-XX
Connector position: PLG-001C-2.5-N-B
Cable Length: 1.50M and Other Length
Cable type: XX

Remark: Optional Mono Plug / Stereo Plug Series other Models Cable processing

---

Ordering information :

KLS's Part No.	Description
KLS1-PLG-001C-2.5-N-B	2.5MM Stereo plug / Nickel-plated / Black color
KLS1-PLG-001C-2.5-G-R	2.5MM Stereo plug / Gold-plated / Red color
KLS1-PLG-001C-3.5-N-B	3.5MM Stereo plug / Nickel-plated / Black color
KLS1-PLG-001C-3.5-G-R	3.5MM Stereo plug / Gold-plated / Red color
KLS1-PLG-001C-6.3-N-B	6.3MM Stereo plug / Nickel-plated / Black color
KLS1-PLG-001C-6.3-G-R	6.3MM Stereo plug / Gold-plated / Red color

Remark: Optional gold-plated nickel And Color Optional

Order Information

Product No.: KLS17-PLGP-001F-2.5-G-B-1.50M-XX

Part No.
Connector position
Cable Length:1.50M and Other Length
XX:Cable type

MONO Plug / Stereo Plug Cable Processing Series

KLS17-PLGP-002 (Mono Plug To Mono Plug)

Connector A: Mono Plug Type (KLS1-PLG-002)
Connector B: Mono Plug Type (KLS1-PLG-002)
Cable Length:1.50 Metre
Cable type: XX



Order Information

KLS17-PLGP-002-3.5-N-1.50M-XX
Connector position: PLG-002-3.5-N
Cable Length: 1.50M and Other Length
Cable type: XX

Remark: Optional Mono Plug / Stereo Plug Series other Models Cable processing

---

Connector position :

KLS's Part No.	Description
KLS1-PLG-002-2.5-N	2.5MM Mono plug / Nickel-plated
KLS1-PLG-002-2.5-G	2.5MM Mono plug / Gold-plated
KLS1-PLG-002-3.5-N	3.5MM Mono plug / Nickel-plated
KLS1-PLG-002-3.5-G	3.5MM Mono plug / Gold-plated
KLS1-PLG-002-6.3-N	6.3MM Mono plug / Nickel-plated
KLS1-PLG-002-6.3-G	6.3MM Mono plug / Gold-plated

Remark: Optional gold-plated nickel

Order Information

Product No.: KLS17-PLGP-002-3.5-N-1.50M-XX

Part No.
Connector position
Cable Length:1.50M and Other Length
XX:Cable type

MONO Plug / Stereo Plug Cable Processing Series

KLS17-PLGP-006 (Mono Plug To Mono Plug)

Connector A: Mono Plug Type (KLS1-PLG-006)
Connector B: Mono Plug Type (KLS1-PLG-006)
Cable Length:1.50 Metre
Cable type: XX



Order Information

KLS17-PLGP-006-6.3-N-R-1.50M-XX
Connector position: PLG-006-6.3-N-R
Cable Length: 1.50M and Other Length
XX: Cable type

Remark: Optional Mono Plug / Stereo Plug Series other Models Cable processing

---

Ordering information :

KLS's Part No.	Description
KLS1-PLG-006-6.3-N-B	6.3mm Mono Plug / Nickel-plated / Black color
KLS1-PLG-006-6.3-N-L	6.3mm Mono Plug / Nickel-plated / Blue color
KLS1-PLG-006-6.3-N-R	6.3mm Mono Plug / Nickel-plated / Red color
KLS1-PLG-006-6.3-G-B	6.3mm Mono Plug / Gold-plated / Black color
KLS1-PLG-006-6.3-G-L	6.3mm Mono Plug / Gold-plated / Blue color
KLS1-PLG-006-6.3-G-R	6.3mm Mono Plug / Gold-plated / Red color

Remark: Optional gold-plated nickel And Color Optional

Order Information

Product No.: KLS17-PLGP-006-6.3-N-R-1.50M-XX

Part No.
Connector position
Cable Length:1.50M and Other Length
XX:Cable type

MONO Plug / Stereo Plug Cable Processing Series

KLS17-PLGP-007 (Mono Plug To Mono Plug)

Connector A: Mono Plug Type (KLS1-PLG-007)
Connector B: Mono Plug Type (KLS1-PLG-007)
Cable Length:1.50 Metre
Cable type: XX



Order Information

KLS17-PLGP-007-6.3-N-1.50M-XX
Connector position: PLG-007-6.3-N
Cable Length: 1.50M and Other Length
XX: Cable type

Remark: Optional Mono Plug / Stereo Plug Series other Models Cable processing

---

Connector position :

KLS's Part No.	Description
KLS1-PLG-007-6.3-N	6.3mm Mono Plug / Nickel-plated
KLS1-PLG-007-6.3-N	6.3mm Mono Plug / Nickel-plated
KLS1-PLG-007-6.3-N	6.3mm Mono Plug / Nickel-plated
KLS1-PLG-007-6.3-G	6.3mm Mono Plug / Gold-plated
KLS1-PLG-007-6.3-G	6.3mm Mono Plug / Gold-plated
KLS1-PLG-007-6.3-G	6.3mm Mono Plug / Gold-plated

Remark: Optional gold-plated nickel And Color Optional

Order Information

Product No.: KLS17-PLGP- 007- 6.3- N - 1.50M-XX

Part No.
Connector position
Cable Length:1.50M and Other Length
XX:Cable type

MONO Plug / Stereo Plug Cable Processing Series

KLS17-PLGP-008 (Mono Plug To Mono Plug)

Connector A: Mono Plug Type (KLS1-PLG-008-6.3A)
Connector B: Mono Plug Type (KLS1-PLG-008-6.3A)
Cable Length:1.50 Metre
Cable type: XX



Order Information

KLS17-PLGP-008-6.3A-N-B-1.50M-XX
Connector position: PLG-008-6.3A-N-B
Cable Length: 1.50M and Other Length
XX: Cable type

Remark: Optional Mono Plug / Stereo Plug Series other Models Cable processing

---

Connector position :

KLS's Part No.	Description
KLS1-PLG-008-6.3A-N-B	6.3mm Mono Plug / Nickel-plated / Black color
KLS1-PLG-008-6.3A-N-L	6.3mm Mono Plug / Nickel-plated / Blue color
KLS1-PLG-008-6.3A-N-R	6.3mm Mono Plug / Nickel-plated / Red color
KLS1-PLG-008-6.3A-G-B	6.3mm Mono Plug / Gold-plated / Black color
KLS1-PLG-008-6.3A-G-L	6.3mm Mono Plug / Gold-plated / Blue color
KLS1-PLG-008-6.3A-G-R	6.3mm Mono Plug / Gold-plated / Red color

Remark: Optional gold-plated nickel

Order Information

Product No.: KLS17-PLGP-008-6.3A-N-B-1.50M-XX

Part No.
Connector position
Cable Length:1.50M and Other Length
XX:Cable type

MONO Plug / Stereo Plug Cable Processing Series

KLS17-PLRP-01 (Mono Plug To Mono Plug)

Connector A: Mono Plug Type (KLS1-PLR-01)
Connector B: Mono Plug Type (KLS1-PLG-008-6.3C) Or Optional Connector position
Cable Length:1.50 Metre
Cable type: XX



Order Information

KLS17-PLRP-01-6.3-N-TO-008-6.3C-N-1.50M-XX
Connector A position: PLR-01-6.3-N
Connector B position: PLG-008-6.3C-N
Cable Length: 1.50M and Other Length
Cable type: XX

Remark: Optional Mono Plug / Stereo Plug Series other Models Cable processing

---

Connector position :

KLS's Part No.	Description
KLS1-PLR-01-6.3-N	6.3mm MONO plug / Nickel-plated
KLS1-PLR-01-6.3-G	6.3mm MONO plug / Gold-plated

KLS's Part No.	Description
KLS1-PLG-008-6.3C-N	6.3mm MONO plug / Nickel-plated
KLS1-PLG-008-6.3C-G	6.3mm MONO plug / Gold-plated

Remark: Optional gold-plated nickel

Order Information

Product No.: KLS17-PLRP-01-6.3-N-TO-008-6.3C-N-1.50M-XX

Part No.
Connector A position
Connector B position
Cable Length:1.50M and Other Length
XX:Cable type

MONO Plug / Stereo Plug Cable Processing Series

KLS17-PLRP-02 (Mono Plug To Mono Plug)

Connector A: Mono Plug Type (KLS1-PLR-02)
Connector B: Mono Plug Type (KLS1-PLG-002) Or Optional Connector position
Cable Length:1.50 Metre
Cable type: XX



Order Information

KLS17-PLRP-02-6.3-N-TO-002-6.3-N-1.50M-XX
Connector A position: PLR-02-6.3-N
Connector B position: PLG-002-6.3-N
Cable Length: 1.50M and Other Length
Cable type: XX

Remark: Optional Mono Plug / Stereo Plug Series other Models Cable processing

---

Connector position :

KLS's Part No.	Description
KLS1-PLR-02-6.3-N	6.3mm MONO plug / Nickel-plated
KLS1-PLR-02-6.3-G	6.3mm MONO plug / Gold-plated

KLS's Part No.	Description
KLS1-PLG-002-6.3-N	6.3mm MONO plug / Nickel-plated
KLS1-PLG-002-6.3-G	6.3mm MONO plug / Gold-plated

Remark: Optional gold-plated nickel

Order Information

Product No.: KLS17-PLRP-02-6.3-N-TO-002-6.3-N-1.50M-XX

Part No.
Connector A position
Connector B position
Cable Length:1.50M and Other Length
XX:Cable type

RCA Plug Cable Processing Series

KLS17-RCAP-PM04-1

Connector A: 1 x RCA Plug Type (KLS1-RCA-PM04)
Connector B: 1 x RCA Plug Type (KLS1-RCA-PM04)
Cable Length:1.50 Metre
Cable type: XX



Order Information

KLS17-RCAP-PM04-R-1-1.50M-XX
Connector position: PM04
R= RCA Plug color Is Red and Other color Combination
1=1 x RCA Plug To 1 x RCA Plug And Other 2 ,3,5
Cable Length: 1.50M and Other Length
Cable type: XX

Remark: Optional RCA Plug / RCA Socket Series other Models Cable processing

---

Ordering information :

1- KLS's Part No.	Description
KLS1-RCA-PM04-R	RCA Plug / Red color
KLS1-RCA-PM04-B	RCA Plug / Black color
KLS1-RCA-PM04-L	RCA Plug / Blue color
KLS1-RCA-PM04-G	RCA Plug / Green color

Remark: Optional Color Optional

Order Information

Product No.: KLS17-RCAP-PM04-R-1-1.50M-XX

Part No.
Series No.
Connector position: Pm04
R= RCA Plug color Is Red and Other color Combination
1=1 x RCA Plug To 1 x RCA Plug And Other 2 ,3,5
Cable Length:1.50M and Other Length
XX:Cable type

RCA Plug Cable Processing Series



KLS17-RCAP-PM04-3

Connector A: 3 x RCA Plug Type (KLS1-RCA-PM04)
Connector B: 3 x RCA Plug Type (KLS1-RCA-PM04)
Cable Length:1.50 Metre
Cable type: XX

Order Information

KLS17-RCAP-PM04-GLR-3-1.50M-XX
Connector position: PM04
GLR= RCA Plug color Is Green Blue Red and Other color Combination
3= 3 x RCA Plug To 3 x RCA Plug And Other 1,2,5
Cable Length: 1.50M and Other Length
Cable type: XX

Remark: Optional RCA Plug / RCA Socket Series other Models Cable processing

---

Ordering information :

1- KLS's Part No.	Description
KLS1-RCA-PM04-R	RCA Plug / Red color
KLS1-RCA-PM04-B	RCA Plug / Black color
KLS1-RCA-PM04-L	RCA Plug / Blue color
KLS1-RCA-PM04-G	RCA Plug / Green color

Remark: Optional Color Optional

Order Information

Product No.: KLS17-RCAP-PM04-GLR-3-1.50M-XX

Part No.
Series No.
Connector position
RCA Plug color:Green Blue Red or Other color Combination
3= 3 x RCA Plug To 3 x RCA Plug And Other 1,2,5
Cable Length:1.50M and Other Length
XX:Cable type

RCA Plug Cable Processing Series



KLS17-RCAP-PM08-3

Connector A: 3 x RCA Plug Type (KLS1-RCA-PM08)
Connector B: 3 x RCA Plug Type (KLS1-RCA-PM08)
Cable Length:1.50 Metre
Cable type: XX
Remark: Optional RCA Plug / RCA Socket Series other Models Cable processing

---

Specifications 1:

. Specified for cable diameters up to 6.5mm,7.5mm,8.5mm
. Dimensions: 11.5mm ± 0.1 diameter x 45mm ± 1.00mm overall length

Specifications 2:

. Specified for cable diameters up to 9.0mm,10.5mm
. Dimensions: 13mm ± 0.2mm diameter x 50mm ± 1.00mm overall length

Specifications 3:

. Specified for cable diameters up to 15mm
. Dimensions: 17mm ± 0.2mm diameter x 67mm ± 1.00mm overall length

Ordering information :

1- KLS's Part No.	Description
KLS1-RCA-PM08-R-6.5	RCA Plug / Red color
KLS1-RCA-PM08-B-7.5	RCA Plug / Black color
KLS1-RCA-PM08-G-8.5	RCA Plug / Green color
KLS1-RCA-PM08-L-15	RCA Plug / Blue color

Remark: Optional Color Optional and Cable O.D Optional

Order Information

Product No.: KLS17-RCAP-PM08-8.5-RWY-3-1.50M-XX

Part No.
Series No.
Connector position
RWY= RCA Plug color Is Red White Yellow or Other color Combination
3= 3 x RCA Plug To 3 x RCA Plug And Other 1,2,5
Cable Length:1.50M and Other Length
XX:Cable type

RCA Plug Cable Processing Series

KLS17-RCAP-PM12-2



Connector A: 2 x RCA Plug Type (KLS1-RCA-PM12)
Connector B: 2 x RCA Plug Type (KLS1-RCA-PM12)
Cable Length:1.50 Metre
Cable type: XX

Order Information

KLS17-RCAP-PM12-RW-2-1.50M-XX
Connector position: PM12
RW= RCA Plug color Is Red White and Other color Combination
2= 2 x RCA Plug To 2 x RCA Plug And Other 1,3,5
Cable Length: 1.50M and Other Length
Cable type: XX

Remark: Optional RCA Plug / RCA Socket Series other Models Cable processing

---

Ordering information :

1- KLS's Part No.	Description
KLS1-RCA-PM12-R	RCA Plug / Red color
KLS1-RCA-PM12-B	RCA Plug / Black color
KLS1-RCA-PM12-L	RCA Plug / Blue color
KLS1-RCA-PM12-G	RCA Plug / Green color

Remark: Optional Color Optional

Order Information

Product No.: KLS17-RCAP-PM12 - RW-2-1.50M-XX

Part No.
Series No.
Connector position
RCA Plug color Is Red White or Other color Combination
3= 3 x RCA Plug To 3 x RCA Plug And Other 1,2,5
Cable Length:1.50M and Other Length
XX:Cable type

RCA Plug Cable Processing Series

KLS17-RCAP-PM20-1

Connector A: 1 x RCA Plug Type (KLS1-RCA-PM20)
Connector B: 1 x RCA Plug Type (KLS1-RCA-PM20)
Cable Length:1.50 Metre
Cable type: XX



Order Information

KLS17-RCAP-PM20-R-1-1.50M-XX
Connector position: PM20
R= RCA Plug color Is Red and Other color Combination
1=1 x RCA Plug To 1 x RCA Plug And Other 2 ,3,5
Cable Length: 1.50M and Other Length
Cable type: XX

Remark: Optional RCA Plug / RCA Socket Series other Models Cable processing

---

Ordering information :

1- KLS's Part No.	Description
KLS1-RCA-PM20-R	RCA Plug / Red color
KLS1-RCA-PM20-B	RCA Plug / Black color
KLS1-RCA-PM20-L	RCA Plug / Blue color
KLS1-RCA-PM20-G	RCA Plug / Green color

Remark: Optional Color Optional

Order Information

Product No.: KLS17-RCAP-PM20-R-1-1.50M-XX

Part No.
Series No.
Connector position: Pm04
R= RCA Plug color Is Red and Other color Combination
1=1 x RCA Plug To 1 x RCA Plug And Other 2 ,3,5
Cable Length:1.50M and Other Length
XX:Cable type

RCA Plug Cable Processing Series





KLS17-RCAP-PM20-3

Connector A: 3 x RCA Plug Type (KLS1-RCA-PM20)
Connector B: 3 x RCA Plug Type (KLS1-RCA-PM20)
Cable Length:1.50 Metre
Cable type: XX

Order Information

KLS17-RCAP-PM20-GLR-3-1.50M-XX
Connector position: PM20
GLR= RCA Plug color Is Green Blue Red and Other color Combination
3= 3 x RCA Plug To 3 x RCA Plug And Other 1,2,5
Cable Length: 1.50M and Other Length
Cable type: XX

Remark: Optional RCA Plug / RCA Socket Series other Models Cable processing

---

Ordering information :

1- KLS's Part No.	Description
KLS1-RCA-PM20-R	RCA Plug / Red color
KLS1-RCA-PM20-B	RCA Plug / Black color
KLS1-RCA-PM20-L	RCA Plug / Blue color
KLS1-RCA-PM20-G	RCA Plug / Green color

Remark: Optional Color Optional

Order Information

Product No.: KLS17-RCAP-PM20-GLR-3-1.50M-XX

Part No.
Series No.
Connector position
RCA Plug color Is Green Blue Red or Other color Combination
3= 3 x RCA Plug To 3 x RCA Plug And Other 1,2,5
Cable Length:1.50M and Other Length
XX:Cable type

RCA Plug Cable Processing Series

KLS17-RCAP-PM21-2



Connector A: 2 x RCA Plug Type (KLS1-RCA-PM21)
Connector B: 2 x RCA Plug Type (KLS1-RCA-PM21)
Cable Length:1.50 Metre
Cable type: XX

Order Information

KLS17-RCAP-PM21-RW-2-1.50M-XX
Connector position: PM21
RW= RCA Plug color Is Red White and Other color Combination
2= 2 x RCA Plug To 2 x RCA Plug And Other 1,3,5
Cable Length: 1.50M and Other Length
Cable type: XX

Remark: Optional RCA Plug / RCA Socket Series other Models Cable processing

---

Ordering information :

1- KLS's Part No.	Description
KLS1-RCA-PM21-R	RCA Plug / Red color
KLS1-RCA-PM21-B	RCA Plug / Black color
KLS1-RCA-PM21-L	RCA Plug / Blue color
KLS1-RCA-PM21-G	RCA Plug / Green color

Remark: Optional Color Optional

Order Information

Product No.: KLS17-RCAP-PM21 - RW-2-1.50M-XX

Part No.
Series No.
Connector position
RCA Plug color Is Red White or Other color Combination
3= 3 x RCA Plug To 3 x RCA Plug And Other 1,2,5
Cable Length:1.50M and Other Length
XX:Cable type

RCA Plug Cable Processing Series

KLS17-RCAP-PM22-1



Connector A: 1 x RCA Plug Type (KLS1-RCA-PM22)
Connector B: 1 x RCA Plug Type (KLS1-RCA-PM22)
Cable Length:1.50 Metre
Cable type: XX

Order Information

KLS17-RCAP-PM22-R-1-1.50M-XX
Connector position: PM22
R= RCA Plug color Is Red and Other color Combination
1=1 x RCA Plug To 1 x RCA Plug And Other 2 ,3,5
Cable Length: 1.50M and Other Length
Cable type: XX

Remark: Optional RCA Plug / RCA Socket Series other Models Cable processing

---

Ordering information :

1- KLS's Part No.	Description
KLS1-RCA-PM22-R	RCA Plug / Red color
KLS1-RCA-PM22-B	RCA Plug / Black color
KLS1-RCA-PM22-L	RCA Plug / Blue color
KLS1-RCA-PM22-G	RCA Plug / Green color

Remark: Optional Color Optional

Order Information

Product No.: KLS17-RCAP-PM22-R-1-1.50M-XX

Part No.
Series No.
Connector position: Pm04
R= RCA Plug color Is Red and Other color Combination
1=1 x RCA Plug To 1 x RCA Plug And Other 2 ,3,5
Cable Length:1.50M and Other Length
XX:Cable type

RCA Plug Cable Processing Series

KLS17-RCAP-PM23-2



Connector A: 2 x RCA Plug Type (KLS1-RCA-PM23)
Connector B: 2 x RCA Plug Type (KLS1-RCA-PM23)
Cable Length:1.50 Metre
Cable type: XX

Order Information

KLS17-RCAP-PM23-RW-2-1.50M-XX
Connector position: PM23
RW= RCA Plug color Is Red White and Other color Combination
2= 2 x RCA Plug To 2 x RCA Plug And Other 1,3,5
Cable Length: 1.50M and Other Length
Cable type: XX

Remark: Optional RCA Plug / RCA Socket Series other Models Cable processing

---

Ordering information :

1- KLS's Part No.	Description
KLS1-RCA-PM23-R	RCA Plug / Red color
KLS1-RCA-PM23-B	RCA Plug / Black color
KLS1-RCA-PM23-L	RCA Plug / Blue color
KLS1-RCA-PM23-G	RCA Plug / Green color

Remark: Optional Color Optional

Order Information

Product No.: KLS17-RCAP-PM23 - RW-2 -1.50M-XX

Part No.
Series No.
Connector position
RCA Plug color Is Red White or Other color Combination
2= 2 x RCA Plug To 2 x RCA Plug And Other 1,3,5
Cable Length:1.50M and Other Length
XX:Cable type

RCA Plug Cable Processing Series

KLS17-RCAP-PM24-3



Connector A: 3 x RCA Plug Type (KLS1-RCA-PM24)
Connector B: 3 x RCA Plug Type (KLS1-RCA-PM24)
Cable Length:1.50 Metre
Cable type: XX

Order Information

KLS17-RCAP-PM24-GLR-3-1.50M-XX
Connector position: PM24
GLR= RCA Plug color Is Green Blue Red and Other color Combination
3= 3 x RCA Plug To 3 x RCA Plug And Other 1,2,5
Cable Length: 1.50M and Other Length
Cable type: XX

Remark: Optional RCA Plug / RCA Socket Series other Models Cable processing

---

Ordering information :

1- KLS's Part No.	Description
KLS1-RCA-PM24-R	RCA Plug / Red color
KLS1-RCA-PM24-B	RCA Plug / Black color
KLS1-RCA-PM24-L	RCA Plug / Blue color
KLS1-RCA-PM24-G	RCA Plug / Green color

Remark: Optional Color Optional

Order Information

Product No.: KLS17-RCAP-PM24-GLR-3-1.50M-XX

Part No.
Series No.
Connector position
RCA Plug color Is Green Blue Red or Other color Combination
3= 3 x RCA Plug To 3 x RCA Plug And Other 1,2,5
Cable Length:1.50M and Other Length
XX:Cable type

RCA Plug Cable Processing Series

KLS17-RCAP-PM25-3



Connector A: 3 x RCA Plug Type (KLS1-RCA-PM25)
Connector B: 3 x RCA Plug Type (KLS1-RCA-PM25)
Cable Length:1.50 Metre
Cable type: XX

Order Information

KLS17-RCAP-PM25-GLR-3-1.50M-XX
Connector position: PM25
GLR= RCA Plug color Is Green Blue Red and Other color Combination
3= 3 x RCA Plug To 3 x RCA Plug And Other 1,2,5
Cable Length: 1.50M and Other Length
Cable type: XX

Remark: Optional RCA Plug / RCA Socket Series other Models Cable processing

---

Ordering information :

1- KLS's Part No.	Description
KLS1-RCA-PM25-R	RCA Plug / Red color
KLS1-RCA-PM25-B	RCA Plug / Black color
KLS1-RCA-PM25-L	RCA Plug / Blue color
KLS1-RCA-PM25-G	RCA Plug / Green color

Remark: Optional Color Optional

Order Information

Product No.: KLS17-RCAP-PM25-GLR-3-1.50M-XX

Part No.
Series No.
Connector position
RCA Plug color Is Green Blue Red or Other color Combination
3= 3 x RCA Plug To 3 x RCA Plug And Other 1,2,5
Cable Length:1.50M and Other Length
XX:Cable type

RCA Plug Cable Processing Series

KLS17-RCAP-PM26-2



Connector A: 2 x RCA Plug Type (KLS1-RCA-PM26)
Connector B: 2 x RCA Plug Type (KLS1-RCA-PM26)
Cable Length:1.50 Metre
Cable type: XX

Order Information

KLS17-RCAP-PM26-RW-2-1.50M-XX
Connector position: PM26
RW= RCA Plug color Is Red White and Other color Combination
2= 2 x RCA Plug To 2 x RCA Plug And Other 1,3,5
Cable Length: 1.50M and Other Length
Cable type: XX

Remark: Optional RCA Plug / RCA Socket Series other Models Cable processing

---

Ordering information :

1- KLS's Part No.	Description
KLS1-RCA-PM26-R	RCA Plug / Red color
KLS1-RCA-PM26-B	RCA Plug / Black color
KLS1-RCA-PM26-L	RCA Plug / Blue color
KLS1-RCA-PM26-G	RCA Plug / Green color

Remark: Optional Color Optional

Order Information

Product No.: KLS17-RCAP-PM26 - RW- 2-1.50M-XX

Part No.
Series No.
Connector position
RW= RCA Plug color Is Red White or Other color Combination
2= 2 x RCA Plug To 2 x RCA Plug And Other 1,3,5
Cable Length:1.50M and Other Length
XX:Cable type

RCA Plug Cable Processing Series

KLS17-RCAP-PM26-3



Connector A: 3 x RCA Plug Type (KLS1-RCA-PM26)
Connector B: 3 x RCA Plug Type (KLS1-RCA-PM26)
Cable Length:1.50 Metre
Cable type: XX

Order Information

KLS17-RCAP-PM26-GLR-3-1.50M-XX
Connector position: PM26
GLR= RCA Plug color Is Green Blue Red and Other color Combination
3= 3 x RCA Plug To 3 x RCA Plug And Other 1,2,5
Cable Length: 1.50M and Other Length
Cable type: XX

Remark: Optional RCA Plug / RCA Socket Series other Models Cable processing

---

Ordering information :

1- KLS's Part No.	Description
KLS1-RCA-PM26-R	RCA Plug / Red color
KLS1-RCA-PM26-B	RCA Plug / Black color
KLS1-RCA-PM26-L	RCA Plug / Blue color
KLS1-RCA-PM26-G	RCA Plug / Green color

Remark: Optional Color Optional

Order Information

Product No.: KLS17-RCAP-PM26-GLR-3-1.50M-XX

Part No.
Series No.
Connector position
RCA Plug color Is Green Blue Red or Other color Combination
3= 3 x RCA Plug To 3 x RCA Plug And Other 1,2,5
Cable Length:1.50M and Other Length
XX:Cable type

RCA Plug Cable Processing Series

KLS17-RCAP-PM40-1



Connector A: 1 x RCA Plug Type (KLS1-RCA-PM40)
Connector B: 1 x RCA Plug Type (KLS1-RCA-PM40)
Cable Length:1.50 Metre
Cable type: XX

Order Information

KLS17-RCAP-PM40-R-1-1.50M-XX
Connector position: PM40
R= RCA Plug color Is Red and Other color Combination
1=1 x RCA Plug To 1 x RCA Plug And Other 2 ,3,5
Cable Length: 1.50M and Other Length
Cable type: XX



Remark: Optional RCA Plug / RCA Socket Series other Models Cable processing

---

Ordering information :

1- KLS's Part No.	Description
KLS1-RCA-PM04-R	RCA Plug / Red color
KLS1-RCA-PM04-B	RCA Plug / Black color
KLS1-RCA-PM04-Y	RCA Plug / Yellow color
KLS1-RCA-PM04-G	RCA Plug / Green color

Remark: Optional Color Optional

Order Information

Product No.: KLS17-RCAP-PM40-R-1-1.50M-XX

Part No.
Series No.
Connector position
R= RCA Plug color Is Red and Other color Combination
1=1 x RCA Plug To 1 x RCA Plug And Other 2 ,3,5
Cable Length:1.50M and Other Length
XX:Cable type

RCA Plug Cable Processing Series

KLS17-RCAP-PM40-2



Connector A: 2 x RCA Plug Type (KLS1-RCA-PM40)
Connector B: 2 x RCA Plug Type (KLS1-RCA-PM40)
Cable Length:1.50 Metre
Cable type: XX

Order Information

KLS17-RCAP-PM40-RB-2-1.50M-XX
Connector position: PM40
RB= RCA Plug color Is Red Black and Other color Combination
2= 2 x RCA Plug To 2 x RCA Plug And Other 1,3,5
Cable Length: 1.50M and Other Length
Cable type: XX

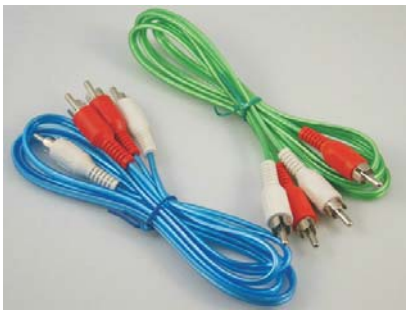

Remark: Optional RCA Plug / RCA Socket Series other Models Cable processing

---

Ordering information :

1- KLS's Part No.	Description
KLS1-RCA-PM40-R	RCA Plug / Red color
KLS1-RCA-PM40-B	RCA Plug / Black color
KLS1-RCA-PM40-Y	RCA Plug / Yellow color
KLS1-RCA-PM40-G	RCA Plug / Green color

Remark: Optional Color Optional

Order Information

Product No.: KLS17-RCAP-PM40 - RB -2-1.50M-XX

Part No.
Series No.
Connector position
RB= RCA Plug color Is Red Black or Other color Combination
2= 2 x RCA Plug To 2 x RCA Plug And Other 1,3,5
Cable Length:1.50M and Other Length
XX:Cable type

RCA Plug Cable Processing Series



KLS17-RCAP-PM40-3

Connector A: 3 x RCA Plug Type (KLS1-RCA-PM40)
Connector B: 3 x RCA Plug Type (KLS1-RCA-PM40)
Cable Length:1.50 Metre
Cable type: XX



Order Information

KLS17-RCAP-PM40-RWY-3-1.50M-XX
Connector position: PM40
RWY= RCA Plug color Is Red White Yellow and Other color Combination
3= 3 x RCA Plug To 3 x RCA Plug And Other 1,2,5
Cable Length: 1.50M and Other Length
Cable type: XX

Remark: Optional RCA Plug / RCA Socket Series other Models Cable processing

---

Ordering information :

1- KLS's Part No.	Description
KLS1-RCA-PM40-R	RCA Plug / Red color
KLS1-RCA-PM40-B	RCA Plug / Black color
KLS1-RCA-PM40-Y	RCA Plug / Yellow color
KLS1-RCA-PM40-G	RCA Plug / Green color

Remark: Optional Color Optional

Order Information

Product No.: KLS17-RCAP-PM40-RWY-3-1.50M-XX

Part No.
Series No.
Connector position
RCA Plug color: Red White Yellow or Other color Combination
3= 3 x RCA Plug To 3 x RCA Plug And Other 1,2,5
Cable Length:1.50M and Other Length
XX:Cable type

RCA Plug Cable Processing Series

KLS17-RCAP-PM41-2

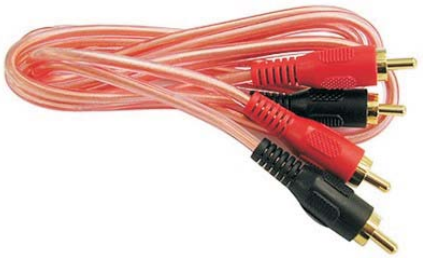

Connector A: 2 x RCA Plug Type (KLS1-RCA-PM41)
Connector B: 2 x RCA Plug Type (KLS1-RCA-PM41)
Cable Length:1.50 Metre
Cable type: XX

Order Information



KLS17-RCAP-PM41-RB-2-1.50M-XX
Connector position: PM41
RB= RCA Plug color Is Red Black and Other color Combination
2= 2 x RCA Plug To 2 x RCA Plug And Other 1,3,5
Cable Length: 1.50M and Other Length
Cable type: XX

Remark: Optional RCA Plug / RCA Socket Series other Models Cable processing

---

Ordering information :

1- KLS's Part No.	Description
KLS1-RCA-PM41-R	RCA Plug / Red color
KLS1-RCA-PM41-B	RCA Plug / Black color
KLS1-RCA-PM41-Y	RCA Plug / Yellow color
KLS1-RCA-PM41-G	RCA Plug / Green color

Remark: Optional Color Optional

Order Information

Product No.: KLS17-RCAP-PM41 - RB -2-1.50M-XX

Part No.
Series No.
Connector position
RB= RCA Plug color Is Red Black or Other color Combination
2= 2 x RCA Plug To 2 x RCA Plug And Other 1,3,5
Cable Length:1.50M and Other Length
XX:Cable type

RCA Plug Cable Processing Series

KLS17-RCAP-PM42-2



Connector A: 2 x RCA Plug Type (KLS1-RCA-PM42)
Connector B: 2 x RCA Plug Type (KLS1-RCA-PM42)
Cable Length:1.50 Metre
Cable type: XX

Order Information

KLS17-RCAP-PM42-RB-2-1.50M-XX
Connector position: PM42
RB= RCA Plug color Is Red Black and Other color Combination
2= 2 x RCA Plug To 2 x RCA Plug And Other 1,3,5
Cable Length: 1.50M and Other Length
Cable type: XX

Remark: Optional RCA Plug / RCA Socket Series other Models Cable processing

---

Ordering information :

1- KLS's Part No.	Description
KLS1-RCA-PM42-R	RCA Plug / Red color
KLS1-RCA-PM42-B	RCA Plug / Black color
KLS1-RCA-PM42-Y	RCA Plug / Yellow color
KLS1-RCA-PM42-G	RCA Plug / Green color

Remark: Optional Color Optional

Order Information

Product No.: KLS17-RCAP-PM42 - RB -2-1.50M-XX

Part No.
Series No.
Connector position
RB= RCA Plug color Is Red Black or Other color Combination
2= 2 x RCA Plug To 2 x RCA Plug And Other 1,3,5
Cable Length:1.50M and Other Length
XX:Cable type

RCA Plug Cable Processing Series

KLS17-RCAP-PM42-3



Connector A: 3 x RCA Plug Type (KLS1-RCA-PM42)
Connector B: 3 x RCA Plug Type (KLS1-RCA-PM42)
Cable Length:1.50 Metre
Cable type: XX

Order Information

KLS17-RCAP-PM42-BRY-3-1.50M-XX
Connector position: PM42
BRY= RCA Plug color Is Black Red Yellow and Other color Combination
3= 3 x RCA Plug To 3 x RCA Plug And Other 1,2,5
Cable Length: 1.50M and Other Length
Cable type: XX

Remark: Optional RCA Plug / RCA Socket Series other Models Cable processing

---

Ordering information :

1- KLS's Part No.	Description
KLS1-RCA-PM42-R	RCA Plug / Red color
KLS1-RCA-PM42-B	RCA Plug / Black color
KLS1-RCA-PM42-Y	RCA Plug / Yellow color
KLS1-RCA-PM42-G	RCA Plug / Green color

Remark: Optional Color Optional

Order Information

Product No.: KLS17-RCAP-PM42-BRY-3-1.50M-XX

Part No.
Series No.
Connector position
RCA Plug color: Black Red Yellow or Other color Combination
3= 3 x RCA Plug To 3 x RCA Plug And Other 1,2,5
Cable Length:1.50M and Other Length
XX:Cable type

RCA Plug Cable Processing Series

KLS17-RCAP-PM43-2



Connector A: 2 x RCA Plug Type (KLS1-RCA-PM43)
Connector B: 2 x RCA Plug Type (KLS1-RCA-PM43)
Cable Length:1.50 Metre
Cable type: XX

Order Information

KLS17-RCAP-PM43-RW-2-1.50M-XX
Connector position: PM43
RW= RCA Plug color Is Red White and Other color Combination
2= 2 x RCA Plug To 2 x RCA Plug And Other 1,3,5
Cable Length: 1.50M and Other Length
Cable type: XX

Remark: Optional RCA Plug / RCA Socket Series other Models Cable processing

---

Ordering information :

1- KLS's Part No.	Description
KLS1-RCA-PM43-R	RCA Plug / Red color
KLS1-RCA-PM43-B	RCA Plug / Black color
KLS1-RCA-PM43-L	RCA Plug / Blue color
KLS1-RCA-PM43-G	RCA Plug / Green color

Remark: Optional Color Optional

Order Information

Product No.: KLS17-RCAP-PM43- RW -2-1.50M-XX

Part No.
Series No.
Connector position
RW= RCA Plug color Is Red White or Other color Combination
2= 2 x RCA Plug To 2 x RCA Plug And Other 1,3,5
Cable Length:1.50M and Other Length
XX:Cable type

RCA Plug Cable Processing Series



KLS17-RCAP-PM43-3

Connector A: 3 x RCA Plug Type (KLS1-RCA-PM43)
Connector B: 3 x RCA Plug Type (KLS1-RCA-PM43)
Cable Length:1.50 Metre
Cable type: XX

Order Information

KLS17-RCAP-PM43-GLR-3-1.50M-XX
Connector position: PM43
GLR= RCA Plug color Is Green Blue Red and Other color Combination
3= 3 x RCA Plug To 3 x RCA Plug And Other 1,2,5
Cable Length: 1.50M and Other Length
Cable type: XX

Remark: Optional RCA Plug / RCA Socket Series other Models Cable processing

---

Ordering information :

1- KLS's Part No.	Description
KLS1-RCA-PM43-R	RCA Plug / Red color
KLS1-RCA-PM43-B	RCA Plug / Black color
KLS1-RCA-PM43-L	RCA Plug / Blue color
KLS1-RCA-PM43-G	RCA Plug / Green color

Remark: Optional Color Optional

Order Information

Product No.: KLS17-RCAP-PM43-GLR-3-1.50M-XX

Part No.
Series No.
Connector position
RCA Plug color Is Green Blue Red or Other color Combination
3= 3 x RCA Plug To 3 x RCA Plug And Other 1,2,5
Cable Length:1.50M and Other Length
XX:Cable type

RCA Plug Cable Processing Series

KLS17-RCAP-PM44-3



Connector A: 3 x RCA Plug Type (KLS1-RCA-PM44)
Connector B: 3 x RCA Plug Type (KLS1-RCA-PM44)
Cable Length:1.50 Metre
Cable type: XX



Order Information

KLS17-RCAP-PM44-RWY-3-1.50M-XX
Connector position: PM44
RWY= RCA Plug color Is Red White Yellow and Other color Combination
3= 3 x RCA Plug To 3 x RCA Plug And Other 1,2,5
Cable Length: 1.50M and Other Length
Cable type: XX

Remark: Optional RCA Plug / RCA Socket Series other Models Cable processing

---

Ordering information :

1- KLS's Part No.	Description
KLS1-RCA-PM44-R	RCA Plug / Red color
KLS1-RCA-PM44-B	RCA Plug / Black color
KLS1-RCA-PM44-Y	RCA Plug / Yellow color
KLS1-RCA-PM44-G	RCA Plug / Green color

Remark: Optional Color Optional

Order Information

Product No.: KLS17-RCAP-PM44-RWY-3-1.50M-XX

Part No.
Series No.
Connector position
RCA Plug color:Red White Yellow or Other color Combination
3= 3 x RCA Plug To 3 x RCA Plug And Other 1,2,5
Cable Length:1.50M and Other Length
XX:Cable type

RCA Plug Cable Processing Series

KLS17-RCAP-PM45-3



Connector A: 3 x RCA Plug Type (KLS1-RCA-PM45)
Connector B: 3 x RCA Plug Type (KLS1-RCA-PM45)
Cable Length:1.50 Metre
Cable type: XX

Order Information

KLS17-RCAP-PM45-GLR-3-1.50M-XX
Connector position: PM45
GLR= RCA Plug color Is Green Blue Red and Other color Combination
3= 3 x RCA Plug To 3 x RCA Plug And Other 1,2,5
Cable Length: 1.50M and Other Length
Cable type: XX

Remark: Optional RCA Plug / RCA Socket Series other Models Cable processing

---

Ordering information :

1- KLS's Part No.	Description
KLS1-RCA-PM45-R	RCA Plug / Red color
KLS1-RCA-PM45-B	RCA Plug / Black color
KLS1-RCA-PM45-L	RCA Plug / Blue color
KLS1-RCA-PM45-G	RCA Plug / Green color

Remark: Optional Color Optional

Order Information

Product No.: KLS17-RCAP-PM45-GLR-3-1.50M-XX

Part No.
Series No.
Connector position
RCA Plug color Is Green Blue Red or Other color Combination
3= 3 x RCA Plug To 3 x RCA Plug And Other 1,2,5
Cable Length:1.50M and Other Length
XX:Cable type

RCA Plug Cable Processing Series

KLS17-RCAP-PM45-5



Connector A: 5 x RCA Plug Type (KLS1-RCA-PM45)
Connector B: 5 x RCA Plug Type (KLS1-RCA-PM45)
Cable Length:1.50 Metre
Cable type: XX

Order Information

KLS17-RCAP-PM45-GLRRW-3-1.50M-XX
Connector position: PM45
GLRRW= RCA Plug color Is Green Blue Red Red White and Other color Combination
3= 3 x RCA Plug To 3 x RCA Plug And Other 1,2,3
Cable Length: 1.50M and Other Length
Cable type: XX

Remark: Optional RCA Plug / RCA Socket Series other Models Cable processing

---

Ordering information :

1- KLS's Part No.	Description
KLS1-RCA-PM45-R	RCA Plug / Red color
KLS1-RCA-PM45-B	RCA Plug / Black color
KLS1-RCA-PM45-L	RCA Plug / Blue color
KLS1-RCA-PM45-G	RCA Plug / Green color

Remark: Optional Color Optional

Order Information

Product No.: KLS17-RCAP-PM45-GLRRW-3-1.50M-XX

Part No.
Series No.
Connector position
RCA Plug color:Green Blue Red Red White or Other color Combination
3= 3 x RCA Plug To 3 x RCA Plug And Other 1,2,5
Cable Length:1.50M and Other Length
XX:Cable type

RCA Plug Cable Processing Series



KLS17-RCAP-PM46-5

Connector A: 5 x RCA Plug Type (KLS1-RCA-PM46)
Connector B: 5 x RCA Plug Type (KLS1-RCA-PM46)
Cable Length:1.50 Metre
Cable type: XX

Order Information

KLS17-RCAP-PM46-GLRRW-3-1.50M-XX
Connector position: PM46
GLRRW= RCA Plug color Is Green Blue Red Red White and Other color Combination
3= 3 x RCA Plug To 3 x RCA Plug And Other 1,2,3
Cable Length: 1.50M and Other Length
Cable type: XX

Remark: Optional RCA Plug / RCA Socket Series other Models Cable processing

---

Ordering information :

1- KLS's Part No.	Description
KLS1-RCA-PM46-R	RCA Plug / Red color
KLS1-RCA-PM46-B	RCA Plug / Black color
KLS1-RCA-PM46-L	RCA Plug / Blue color
KLS1-RCA-PM46-G	RCA Plug / Green color

Remark: Optional Color Optional

Order Information

Product No.: KLS17-RCAP-PM46-GLRRW-3-1.50M-XX

Part No.
Series No.
Connector position
RCA Plug color: Green Blue Red Red White or Other color Combination
3= 3 x RCA Plug To 3 x RCA Plug And Other 1,2,5
Cable Length:1.50M and Other Length
XX:Cable type

RCA Plug Cable Processing Series

KLS17-RCAP-PM47-2



Connector A: 2 x RCA Plug Type (KLS1-RCA-PM47)
Connector B: 2 x RCA Plug Type (KLS1-RCA-PM40)
Cable Length:1.50 Metre
Cable type: XX

Order Information

KLS17-RCAP-PM47-RW-2-1.50M-XX
Connector position: PM47
RW= RCA Plug color Is Red White and Other color Combination
2= 2 x RCA Plug To 2 x RCA Plug And Other 1,3,5
Cable Length: 1.50M and Other Length
Cable type: XX

Remark: Optional RCA Plug / RCA Socket Series other Models Cable processing

---

Ordering information :

1- KLS's Part No.	Description
KLS1-RCA-PM47-R	RCA Plug / Red color
KLS1-RCA-PM47-B	RCA Plug / Black color
KLS1-RCA-PM47-Y	RCA Plug / Yellow color
KLS1-RCA-PM47-G	RCA Plug / Green color

Remark: Optional Color Optional

Order Information

Product No.: KLS17-RCAP-PM47- RW -2-1.50M-XX

Part No.
Series No.
Connector position
RW= RCA Plug color Is Red White or Other color Combination
2= 2 x RCA Plug To 2 x RCA Plug And Other 1,3,5
Cable Length:1.50M and Other Length
XX:Cable type

RCA Plug Cable Processing Series

KLS17-RCAP-PM48-2



Connector A: 2 x RCA Plug Type (KLS1-RCA-PM48)
Connector B: 1 x RCA Plug Type (KLS1-RCA-PM40)
Cable Length:1.50 Metre
Cable type: XX

Order Information

KLS17-RCAP-PM48-RW-2-1.50M-XX
Connector position: PM48
RW= RCA Plug color Is Red White and Other color Combination
2= 2 x RCA Plug To 2 x RCA Plug And Other 1,3,5
Cable Length: 1.50M and Other Length
Cable type: XX

Remark: Optional RCA Plug / RCA Socket Series other Models Cable processing

Order Information

Product No.: KLS17-RCAP-PM48- RW -2-1.50M-XX

Part No.
Series No.
Connector position
RW= RCA Plug color Is Red White or Other color Combination
2= 2 x RCA Plug To 2 x RCA Plug And Other 1,3,5
Cable Length:1.50M and Other Length
XX:Cable type

RCA Plug Cable Processing Series

KLS17-RCAP-PM49-2

Connector A: 2 x RCA Plug Type (KLS1-RCA-PM49)
Connector B: 2 x RCA Plug Type (KLS1-RCA-PM40)
Cable Length:1.50 Metre
Cable type: XX



Order Information

KLS17-RCAP-PM49-RW-2-1.50M-XX
Connector position: PM49
RW= RCA Plug color Is Red White and Other color Combination
2= 2 x RCA Plug To 2 x RCA Plug And Other 1,3,5
Cable Length: 1.50M and Other Length
Cable type: XX

Remark: Optional RCA Plug / RCA Socket Series other Models Cable processing

Order Information

Product No.: KLS17-RCAP-PM49- RW -2-1.50M-XX

Part No.
Series No.
Connector position
RW= RCA Plug color Is Red White or Other color Combination
2= 2 x RCA Plug To 2 x RCA Plug And Other 1,3,5
Cable Length:1.50M and Other Length
XX:Cable type

Audio and Video Adaptor Cable Processing Series

KLS17-MRP-01 (Mono Plug To RCA Plug)

Connector A: 2 x 6.3mm Mono Plug Gold-plated Type (KLS1-PLG-002)
Connector B: 2 x RCA Plug Gold-plated Type (KLS1-RCA-PM03)
Cable Length:1.50 Metre
Cable type: XX

Order Information
KLS17-MRP-01-6.3-1.50M-XX
6.3=6.3mm Mono plug and other 3.5mm
Cable Length: 1.50M and Other Length
Cable type: XX

Remark: Optional MONO Plug / Stereo Plug Series To RCA Plug / RCA Socket Series other Models Cable processing



Order Information

Product No.: KLS17-MRP-01-6.3-1.50M-XX

Part No.
Series No.
6.3=6.3mm Mono plug and other 3.5mm
Cable Length:1.50M and Other Length
XX:Cable type

Audio and Video Adaptor Cable Processing Series

KLS17-MRP-02 (Mono Plug To RCA Plug)

Connector A: 2 x 6.3mm Mono Plug Gold-plated Type (KLS1-PLG-008)
Connector B: 2 x RCA Plug Gold-plated Type
Cable Length:1.50 Metre
Cable type: XX

Order Information

KLS17-MRP-02-6.3-1.50M-XX
6.3=6.3mm Mono plug
Cable Length: 1.50M and Other Length
Cable type: XX

Remark: Optional MONO Plug / Stereo Plug Series To RCA Plug / RCA Socket Series other Models Cable processing



Order Information

Product No.: KLS17-MRP-02-6.3-1.50M-XX

Part No.
Series No.
6.3=6.3mm Mono plug and other 3.5mm
Cable Length:1.50M and Other Length
XX:Cable type

Audio and Video Adaptor Cable Processing Series

KLS17-MXP-01 (Mono Plug To XLR Plug)

Connector A: 6.3mm Mono Plug Type
Connector B: XLR Plug Female Type (KLS1-XLR-P05)
Cable Length:1.50 Metre
Cable type: XX

Order Information

KLS17-MXP-01-F-03-6.3-1.50M-XX
M=XLR Plug Male , F=XLR Plug Female
03-No.of 03~05pin
6.3=6.3mm Mono plug and other 3.5mm
Cable Length: 1.50M and Other Length
Cable type: XX

Remark: Optional MONO Plug / Stereo Plug Series To XLR Plug / XLR Socket Series other Models Cable processing



Order Information

Product No.: KLS17-MXP-01-F-03-6.3-1.50M-XX

Part No.
Series No.
M=XLR Plug Male , F=XLR Plug Female
03-No.of 03~05pin
6.3=6.3mm Mono plug and other 3.5mm
Cable Length:1.50M and Other Length
XX:Cable type

Audio and Video Adaptor Cable Processing Series

KLS17-MXP-02 (Mono Plug To XLR Plug)

Connector A: 6.3mm Mono Plug Type
Connector B: XLR Plug Female Type (KLS1-XLR-P06)
Cable Length:1.50 Metre
Cable type: XX

Order Information

KLS17-MXP-02-F-03-6.3-1.50M-XX
M=XLR Plug Male , F=XLR Plug Female
03-No.of 03~05pin
6.3=6.3mm Mono plug and other 3.5mm
Cable Length: 1.50M and Other Length
Cable type: XX

Remark: Optional MONO Plug / Stereo Plug Series To XLR Plug / XLR Socket Series other Models Cable processing





Order Information

Product No.: KLS17-MXP-02-F-03-6.3-1.50M-XX

Part No.
Series No.
M=XLR Plug Male , F=XLR Plug Female
03-No.of 03~05pin
6.3=6.3mm Mono plug and other 3.5mm
Cable Length:1.50M and Other Length
XX:Cable type

Audio and Video Adaptor Cable Processing Series

KLS17-MXP-04 (Mono Plug To XLR Plug)

Connector A: 6.3mm Mono Plug Type (KLS1-PLG-002)
Connector B: XLR Plug Female Type (KLS1-XLR-P06)
Cable Length:1.50 Metre
Cable type: XX

Order Information
KLS17-MXP-04-F-03-6.3-1.50M-XX
M=XLR Plug Male , F=XLR Plug Female
03-No.of 03~05pin
6.3=6.3mm Mono plug and other 3.5mm
Cable Length: 1.50M and Other Length
Cable type: XX

Remark: Optional MONO Plug / Stereo Plug Series To XLR Plug / XLR Socket Series other Models Cable processing



Order Information

Product No.: KLS17-MXP-04-F-03-6.3-1.50M-XX

Part No.
Series No.
M=XLR Plug Male , F=XLR Plug Female
03-No.of 03~05pin
6.3=6.3mm Mono plug and other 3.5mm
Cable Length:1.50M and Other Length
XX:Cable type

Audio and Video Adaptor Cable Processing Series

KLS17-MXP-03 (Mono Plug To XLR Plug)

Connector A: 6.3mm Mono Plug Type (KLS1-PLG-009)
Connector B: XLR Plug Male Type (KLS1-XLR-P12)
Cable Length:1.50 Metre
Cable type: XX



Order Information

KLS17-MXP-03-M-03-6.3-1.50M-XX
M=XLR Plug Male , F=XLR Plug Female
03-No.of 03~05pin
6.3=6.3mm Mono plug and other 3.5mm
Cable Length: 1.50M and Other Length
Cable type: XX

Remark: Optional MONO Plug / Stereo Plug Series To XLR Plug / XLR Socket Series other Models Cable processing

Order Information

Product No.: KLS17-MXP-03-M-03-6.3-1.50M-XX

Part No.
Series No.
M=XLR Plug Male , F=XLR Plug Female
03-No.of 03~05pin
6.3=6.3mm Mono plug and other 3.5mm
Cable Length:1.50M and Other Length
XX:Cable type

Audio and Video Adaptor Cable Processing Series

KLS17-MXP-05 (Mono Plug To XLR Plug)

Connector A: 6.3mm Mono Plug Type
Connector B: XLR Plug Female Type (KLS1-XLR-P13)
Cable Length:1.50 Metre
Cable type: XX



Order Information

KLS17-MXP-05-F-03-6.3-1.50M-XX
M=XLR Plug Male , F=XLR Plug Female
03-No.of 03~05pin
6.3=6.3mm Mono plug and other 3.5mm
Cable Length: 1.50M and Other Length
Cable type: XX

Remark: Optional MONO Plug / Stereo Plug Series To XLR Plug / XLR Socket Series other Models Cable processing



Order Information

Product No.: KLS17-MXP-05-F-03-6.3-1.50M-XX

Part No.
Series No.
M=XLR Plug Male , F=XLR Plug Female
03-No.of 03~05pin
6.3=6.3mm Mono plug and other 3.5mm
Cable Length:1.50M and Other Length
XX:Cable type

Audio and Video Adaptor Cable Processing Series

KLS17-RXP-01 (RCA Plug To XLR Plug)

Connector A: RCA Plug Type
Connector B: XLR Plug Female Type (KLS1-XLR-P13)
Cable Length:1.50 Metre
Cable type: XX

Order Information
KLS17-RXP-01-F-03-1.50M-XX
M=XLR Plug Male , F=XLR Plug Female
03-No.of 03~05pin
Cable Length: 1.50M and Other Length
Cable type: XX

Remark: Optional RCA Plug / RCA Socket Series To XLR Plug / XLR Socket Series other Models Cable processing



Order Information

Product No.: KLS17-RXP-01-F-03-1.50M-XX

Part No.
Series No.
M=XLR Plug Male , F=XLR Plug Female
03-No.of 03~05pin
Cable Length:1.50M
XX:Cable type

Audio and Video Adaptor Cable Processing Series

KLS17-SRP-01 (Stereo Plug To RCA Plug)

Connector A: 1 x 3.5mm Stereo Plug Gold-plated Type (KLS1-PLG-001B)
Connector B: 2 x RCA Plug Gold-plated Type (KLS1-RCA-PM03)
Cable Length:1.50 Metre
Cable type: XX

Order Information
KLS17-SRP-01-3.5-1.50M-XX
3.5=3.5mm Mono plug and other 6.3mm
Cable Length: 1.50M and Other Length
Cable type: XX

Remark: Optional MONO Plug / Stereo Plug Series To RCA Plug / RCA Socket Series other Models Cable processing



Order Information

Product No.: KLS17-SRP-01-3.5-1.50M-XX

Part No.
Series No.
3.5=3.5mm Mono plug and other 6.3mm
Cable Length:1.50M and Other Length
XX:Cable type

Audio and Video Adaptor Cable Processing Series

KLS17-SRP-02 (Stereo Plug To RCA Plug)

Connector A: 1 x 3.5mm Stereo Plug Gold-plated Type
Connector B: 2 x RCA Plug Gold-plated Type
Cable Length:1.50 Metre
Cable type: XX

Order Information

KLS17-SRP-02-3.5-1.50M-XX
3.5=3.5mm Mono plug and other 6.3mm
Cable Length: 1.50M and Other Length
Cable type: XX

Remark: Optional MONO Plug / Stereo Plug Series To RCA Plug / RCA Socket Series other Models Cable processing



Order Information

Product No.: KLS17-SRP-02-3.5-1.50M-XX

Part No.
Series No.
3.5=3.5mm Mono plug and other 6.3mm
Cable Length:1.50M and Other Length
XX:Cable type

Audio and Video Adaptor Cable Processing Series

KLS17-SRP-03 (Stereo Plug To RCA Plug)

Connector A: 1 x 3.5mm Stereo Plug Gold-plated Type (KLS1-PLG-001A)
Connector B: 2 x RCA Plug Gold-plated Type (KLS1-RCA-PM40)
Cable Length:1.50 Metre
Cable type: XX

Order Information
KLS17-SRP-03-3.5-1.50M-XX
3.5=3.5mm Mono plug and other 6.3mm
Cable Length: 1.50M and Other Length
Cable type: XX

Remark: Optional MONO Plug / Stereo Plug Series To RCA Plug / RCA Socket Series other Models Cable processing



Order Information

Product No.: KLS17-SRP-03-3.5-1.50M-XX

Part No.
Series No.
3.5=3.5mm Mono plug and other 6.3mm
Cable Length:1.50M and Other Length
XX:Cable type

Audio and Video Adaptor Cable Processing Series

KLS17-SRP-04 (Stereo Plug To RCA Plug)

Connector A: 1 x 3.5mm Stereo Plug Gold-plated Type
Connector B: 3 x RCA Plug Gold-plated Type (KLS1-RCA-PM40)
Cable Length:1.50 Metre
Cable type: XX

Order Information
KLS17-SRP-04-3.5-1.50M-XX
3.5=3.5mm Mono plug and other 6.3mm
Cable Length: 1.50M and Other Length
Cable type: XX

Remark: Optional MONO Plug / Stereo Plug Series To RCA Plug / RCA Socket Series other Models Cable processing



Order Information

Product No.: KLS17-SRP-04-3.5-1.50M-XX

Part No.
Series No.
3.5=3.5mm Mono plug and other 6.3mm
Cable Length:1.50M and Other Length
XX:Cable type

Audio and Video Adaptor Cable Processing Series

KLS17-SRP-05 (Stereo Plug To RCA Plug)

Connector A: 1 x 3.5mm Stereo Plug Gold-plated Type (KLS1-PLG-001C)
Connector B: 2 x RCA Plug Gold-plated Type (KLS1-RCA-PM40)
Cable Length:1.50 Metre
Cable type: XX

Order Information

KLS17-SRP-05-3.5-1.50M-XX
3.5=3.5mm Mono plug and other 6.3mm
Cable Length: 1.50M and Other Length
Cable type: XX

Remark: Optional MONO Plug / Stereo Plug Series To RCA Plug / RCA Socket Series other Models Cable processing



Order Information

Product No.: KLS17-SRP-05-3.5-1.50M-XX

Part No.
Series No.
3.5=3.5mm Mono plug and other 6.3mm
Cable Length:1.50M and Other Length
XX:Cable type

Audio and Video Adaptor Cable Processing Series

KLS17-SXP-01 (Stereo Plug To XLR Plug)

Connector A: 6.3mm Stereo Plug Type
Connector B: XLR Plug Female Type (KLS1-XLR-P05)
Cable Length:1.50 Metre
Cable type: XX

Order Information

KLS17-SXP-01-F-03-6.3-1.50M-XX
M=XLR Plug Male , F=XLR Plug Female
03-No.of 03~05pin
6.3=6.3mm Mono plug and other 3.5mm
Cable Length: 1.50M and Other Length
Cable type: XX

Remark: Optional MONO Plug / Stereo Plug Series To XLR Plug / XLR Socket Series other Models Cable processing





Order Information

Product No.: KLS17-SXP-01-F-03-6.3-1.50M-XX

- **Part No.**
- **Series No.**
- **M=XLR Plug Male , F=XLR Plug Female**
- **03-No.of 03~05pin**
- **6.3=6.3mm Mono plug and other 3.5mm**
- **Cable Length:1.50M and Other Length**
- **XX:Cable type**

Audio and Video Adaptor Cable Processing Series

KLS17-SXP-02 (Stereo Plug To XLR Plug)

Connector A: 6.3mm Stereo Plug Type (KLS1-PLG-008A)
Connector B: XLR Plug Female Type (KLS1-XLR-P06)
Cable Length:1.50 Metre
Cable type: XX

Order Information

KLS17-SXP-02-F-03-6.3-1.50M-XX
M=XLR Plug Male , F=XLR Plug Female
03-No.of 03~05pin
6.3=6.3mm Mono plug and other 3.5mm
Cable Length: 1.50M and Other Length
Cable type: XX

Remark: Optional MONO Plug / Stereo Plug Series To XLR Plug / XLR Socket Series other Models Cable processing



Order Information

Product No.: KLS17-SXP-02-F-03-6.3-1.50M-XX

Part No.
Series No.
M=XLR Plug Male , F=XLR Plug Female
03-No.of 03~05pin
6.3=6.3mm Mono plug and other 3.5mm
Cable Length:1.50M and Other Length
XX:Cable type

Audio and Video Adaptor Cable Processing Series

KLS17-SXP-03 (Stereo Plug To XLR Plug)

Connector A: 6.3mm Stereo Plug Type
Connector B: XLR Plug Female Type (KLS1-XLR-P13)
Cable Length:1.50 Metre
Cable type: XX

Order Information

KLS17-SXP-03-F-03-6.3-1.50M-XX
M=XLR Plug Male , F=XLR Plug Female
03-No.of 03~05pin
6.3=6.3mm Mono plug and other 3.5mm
Cable Length: 1.50M and Other Length
Cable type: XX

Remark: Optional MONO Plug / Stereo Plug Series To XLR Plug / XLR Socket Series other Models Cable processing



Order Information

Product No.: KLS17-SXP-03-F-03-6.3-1.50M-XX

Part No.
Series No.
M=XLR Plug Male , F=XLR Plug Female
03-No.of 03~05pin
6.3=6.3mm Mono plug and other 3.5mm
Cable Length:1.50M and Other Length
XX:Cable type

XLR Plug Cable Processing Series

KLS17-XLRP-P04

Connector A: XLR Plug Type (KLS1-XLR-P04)
Connector B: XLR Plug Type (KLS1-XLR-P04)
Cable Length:1.50 Metre
Cable type: XX



Order Information

KLS17-XLRP-04-03-F/M-B-1.50M-XX
Connector position: XLR-04
03-No.of 03~07pin
F/M=Female/Male : Or M/M Or F/F
XLR Plug Color: R-Red B-Black W-White L-Blue G-Green.....
Cable Length: 1.50M and Other Length
Cable type: XX

Remark: Optional XLR Plug / XLR Socket Series other Models Cable processing

Order Information

Product No.: KLS17-XLRP-04-03-F/M-B-1.50M-XX

Part No.
Connector position
03-No.of 03~07pin
F/M=Female/Male : Or M/M Or F/F
XLR Plug Color: R-Red B-Black W-White L-Blue G-Green
Cable Length:1.50M and Other Length
XX:Cable type

XLR Plug Cable Processing Series

KLS17-XLRP-P05

Connector A: XLR Plug Type (KLS1-XLR-P05)
Connector B: XLR Plug Type (KLS1-XLR-P05)
Cable Length:1.50 Metre
Cable type: XX

Order Information
KLS17-XLRP-05-03-F/M-B-1.50M-XX
Connector position: XLR-05
03-No.of 03~07pin
F/M=Female/Male : Or M/M Or F/F
XLR Plug Color: R-Red B-Black W-White L-Blue G-Green.....
Cable Length: 1.50M and Other Length
Cable type: XX

Remark: Optional XLR Plug / XLR Socket Series other Models Cable processing





Order Information

Product No.: KLS17-XLRP-05-03-F/M-B-1.50M-XX

Part No.
Connector position
03-No.of 03~07pin
F/M=Female/Male : Or M/M Or F/F
XLR Plug Color: R-Red B-Black W-White L-Blue G-Green
Cable Length:1.50M and Other Length
XX:Cable type

XLR Plug Cable Processing Series

KLS17-XLRP-P05-2

Connector A: 1 x XLR Plug Type (KLS1-XLR-P05)
Connector B: 2 x XLR Plug Type (KLS1-XLR-P05)
Cable Length:1.50 Metre
Cable type: XX

Order Information
KLS17-XLRP-05-03-1M/2F-B-1.50M-XX
Connector position: XLR-05
03-No.of 03~07pin
1/2= 1 x XLR Plug To 2 x XLR Plug
M/F=Male/Female : Or F/M Or M/M Or F/F
XLR Plug Color: R-Red B-Black W-White L-Blue G-Green.....
Cable Length: 1.50M and Other Length
Cable type: XX

Remark: Optional XLR Plug / XLR Socket Series other Models Cable processing



Order Information

Product No.: KLS17-XLRP-05-03-1M/2F-B-1.50M-XX

Part No.
Connector position
03-No.of 03~07pin
M/F=Male/Female : Or F/M Or M/M Or F/F
XLR Plug Color: R-Red B-Black W-White L-Blue G-Green
Cable Length:1.50M and Other Length
XX:Cable type

XLR Plug Cable Processing Series

KLS17-XLRP-P06



Connector A: XLR Plug Type (KLS1-XLR-P06)
Connector B: XLR Plug Type (KLS1-XLR-P06)
Cable Length:1.50 Metre
Cable type: XX

Order Information

KLS17-XLRP-06-03-F/M-B-1.50M-XX
Connector position: XLR-06
03-No.of 03~07pin
F/M=Female/Male : Or M/M Or F/F
XLR Plug Color: R-Red B-Black W-White L-Blue G-Green.....
Cable Length: 1.50M and Other Length
Cable type: XX

Remark: Optional XLR Plug / XLR Socket Series other Models Cable processing

Order Information

Product No.: KLS17-XLRP-05-03-F/M-B-1.50M-XX

Part No.
Connector position
03-No.of 03~07pin
F/M=Female/Male : Or M/M Or F/F
XLR Plug Color: R-Red B-Black W-White L-Blue G-Green
Cable Length:1.50M and Other Length
XX:Cable type

XLR Plug Cable Processing Series

KLS17-XLRP-P06-2

Connector A: 1 x XLR Plug Type (KLS1-XLR-P06)
Connector B: 2 x XLR Plug Type (KLS1-XLR-P06)
Cable Length:1.50 Metre
Cable type: XX



Order Information
KLS17-XLRP-06-03-1M/2F-B-1.50M-XX
Connector position: XLR-06
03-No.of 03~07pin
1/2= 1 x XLR Plug To 2 x XLR Plug
M/F=Male/Female : Or F/M Or M/M Or F/F
XLR Plug Color: R-Red B-Black W-White L-Blue G-Green.....
Cable Length: 1.50M and Other Length
Cable type: XX

Remark: Optional XLR Plug / XLR Socket Series other Models Cable processing

Order Information

Product No.: KLS17-XLRP-06-03-1M/2F-B-1.50M-XX

Part No.
Connector position
03-No.of 03~07pin
M/F=Male/Female : Or F/M Or M/M Or F/F
XLR Plug Color: R-Red B-Black W-White L-Blue G-Green
Cable Length:1.50M and Other Length
XX:Cable type

XLR Plug Cable Processing Series

KLS17-XLRP-P12

Connector A: XLR Plug Type (KLS1-XLR-P12)
Connector B: XLR Plug Type (KLS1-XLR-P12)
Cable Length:1.50 Metre
Cable type: XX



Order Information

KLS17-XLRP-12-03-F/M-B-1.50M-XX
Connector position: XLR-12
03-No.of 03~07pin
F/M=Female/Male : Or M/M Or F/F
XLR Plug Color: R-Red B-Black W-White L-Blue G-Green.....
Cable Length: 1.50M and Other Length
Cable type: XX

Remark: Optional XLR Plug / XLR Socket Series other Models Cable processing

Order Information

Product No.: KLS17-XLRP-12-03-F/M-B-1.50M-XX

- **Part No.**
- **Connector position**
- **03-No.of 03~07pin**
- **F/M=Female/Male : Or M/M Or F/F**
- **XLR Plug Color: R-Red B-Black W-White L-Blue G-Green**
- **Cable Length:1.50M and Other Length**
- **XX:Cable type**

XLR Plug Cable Processing Series

KLS17-XLRP-P13

Connector A: XLR Plug Type (KLS1-XLR-P13)
Connector B: XLR Plug Type (KLS1-XLR-P13)
Cable Length:1.50 Metre
Cable type: XX



Order Information

KLS17-XLRP-13-03-F/M-B-1.50M-XX
Connector position: XLR-13
03-No.of 03~07pin
F/M=Female/Male : Or M/M Or F/F
XLR Plug Color: R-Red B-Black W-White L-Blue G-Green.....
Cable Length: 1.50M and Other Length
Cable type: XX

Remark: Optional XLR Plug / XLR Socket Series other Models Cable processing

Order Information

Product No.: KLS17-XLRP-13-03-F/M-B-1.50M-XX

Part No.
Connector position
03-No.of 03~07pin
F/M=Female/Male : Or M/M Or F/F
XLR Plug Color: R-Red B-Black W-White L-Blue G-Green
Cable Length:1.50M and Other Length
XX:Cable type

XLR Plug Cable Processing Series

KLS17-XLRP-P13-2

Connector A: 1 x XLR Plug Type (KLS1-XLR-P13)

Connector B: 2 x XLR Plug Type (KLS1-XLR-P13)

Cable Length:1.50 Metre

Cable type: XX



Order Information

KLS17-XLRP-13-03-1F/2M-B-1.50M-XX

Connector position: XLR-13

03-No.of 03~07pin

1/2= 1 x XLR Plug To 2 x XLR Plug

F/M=Female/Male : Or M/F Or M/M Or F/F

XLR Plug Color: R-Red B-Black W-White L-Blue G-Green.....

Cable Length: 1.50M and Other Length

Cable type: XX

Remark: Optional XLR Plug / XLR Socket Series other Models Cable processing

Order Information

Product No.: KLS17-XLRP-13-03-1F/2M-B-1.50M-XX

Part No.

Connector position

03-No.of 03~07pin

M/F=Male/Female : Or F/M Or M/M Or F/F

XLR Plug Color: R-Red B-Black W-White L-Blue G-Green

Cable Length:1.50M and Other Length

XX:Cable type

Audio and Video Adaptor Cable Processing Series

KLS17-SVP-01



KLS17-SVP-02



KLS17-SVP-03



KLS17-SVP-04



KLS17-SVP-05



KLS17-SVP-06



HDMI / DVI Cable Processing Series

KLS17-HCP-01 (HDMI To HDMI)



Connector A: HDMI 19P Male Type
Connector B: HDMI 19P Male Type
Connector Plating:Nickel-plated
Cable Length:1.50 Metre
Cable Color:Black
Cable Type:24AWG,26AWG,28AWG,30AWG Standard
Ferrite Core Optional:With Or Without

Material:

- 99.99% oxygen-free, solid-copper high-purity conductors reduce signal distortion
- Quad-shielding isolates from outside noise for superior clarity
- Precision formulated, polyethylene dielectric material maintains stronger signals
- Impedance-matched, twisted-pair construction reduces cross talk and interference
- Integrated strain relief protects against wire damage for consistently high quality
- Abrasion resistant, flexible PVC jacket maintains integrity, even when bent
- 24k gold-plated connectors create precise contact for low signal loss

Electrical Characteristics:

-This HDMI Audio/Video Cable V1.3 OR V1.4 provides a high quality interface between any HDMI-enabled audio/video source, such as HDTV's, DVD players including HD DVD/Blu-Ray Players, A/V receivers and projectors. This HDMI cable supports 720p, 1080i, and 1080p HDTV resolutions.
-Eliminates unnecessary signal conversions.
-Supports standard, enhanced, or high-definition video,340MHz max clock frequency.
-Supports up to 8 channel digital audio on a single cable eliminating costly A/D signal conversions.
-Bi-directional control signal transfer.
-10.2 Gbps bandwidth that suppors the future demand of HD displays
-Simple, user-friendly connector.
-HDCP (High-Bandwidth Digital Content Protection) Compliant
-Fully Compatible with new HDMI 1.4 specification and HDMI 1.3b or below

24K Gold-plated And With Ferrite Core :



Order Information

Product No.: KLS17-HCP-01-V1.3B-G-1.50M-B-24AWG-Y

Part No.
Series No.
Availble version:V1.3B,V1.3C,V1.4
Connector Plating:G=24K Gold-plated
N=Nickel-plated
Cable Length:1.50M and Other Length
Cable Color:L=Blue B=Black E=Beige R=Red G=Green
Cable type:24AWG,26AWG,28AWG,30AWG
Ferrite Core Optional:Y=With N=Without

HDMI / DVI Cable Processing Series

KLS17-HCP-02 (HDMI To HDMI)

Material:
- 99.99% oxygen-free, solid-copper high-purity conductors reduce signal distortion
- Quad-shielding isolates from outside noise for superior clarity
- Precision formulated, polyethylene dielectric material maintains stronger signals
- Impedance-matched, twisted-pair construction reduces cross talk and interference
- Integrated strain relief protects against wire damage for consistently high quality
- Abrasion resistant, flexible PVC jacket maintains integrity, even when bent
- 24k gold-plated connectors create precise contact for low signal loss

Connector A: HDMI 19P Male Type
Connector B: HDMI 19P Male Type
Connector Plating:24K Gold-plated
Cable Length:1.50 Metre
Cable Color:Green,Red
Cable Type:24AWG,26AWG,28AWG
30AWG Standard
Ferrite Core Optional:With Or Without

Electrical Characteristics:
-This HDMI Audio/Video Cable V1.3 OR V1.4 provides a high quality interface between any HDMI-enabled audio/video source, such as HDTV's, DVD players including HD DVD/Blu-Ray Players, A/V receivers and projectors. This HDMI cable supports 720p, 1080i, and 1080p HDTV resolutions.
-Eliminates unnecessary signal conversions.
-Supports standard, enhanced, or high-definition video,340MHz max clock frequency.
-Supports up to 8 channel digital audio on a single cable eliminating costly A/D signal conversions.
-Bi-directional control signal transfer.
-10.2 Gbps bandwidth that suppors the future demand of HD displays
-Simple, user-friendly connector.
-HDCP (High-Bandwidth Digital Content Protection) Compliant
-Fully Compatible with new HDMI 1.4 specification and HDMI 1.3b or below



Order Information

Product No.: KLS17-HCP-02-V1.3B-G-1.50M-B-24AWG-Y

Part No.
Series No.
Availble version:V1.3B,V1.3C,V1.4
Connector Plating:G=24K Gold-plated
N=Nickel-plated
Cable Length:1.50M and Other Length
Cable Color:L=Blue B=Black E=Beige R=Red G=Green
Cable type:24AWG,26AWG,28AWG,30AWG
Ferrite Core Optional:Y=With N=Without

HDMI / DVI Cable Processing Series

KLS17-HCP-03 (HDMI To HDMI)

Material:
- 99.99% oxygen-free, solid-copper high-purity conductors reduce signal distortion
- Quad-shielding isolates from outside noise for superior clarity
- Precision formulated, polyethylene dielectric material maintains stronger signals
- Impedance-matched, twisted-pair construction reduces cross talk and interference
- Integrated strain relief protects against wire damage for consistently high quality
- Abrasion resistant, flexible PVC jacket maintains integrity, even when bent
- 24k gold-plated connectors create precise contact for low signal loss

Connector A: HDMI 19P Male Type
Connector B: HDMI 19P Male Type
Connector Plating:Nickel-plated
Cable Length:1.50 Metre
Cable Color:Beire
Cable Type:24AWG,26AWG,28AWG, 30AWG Standard
Ferrite Core Optional:With Or Without

Electrical Characteristics:
-This HDMI Audio/Video Cable V1.3 OR V1.4 provides a high quality interface between any HDMI-enabled audio/video source, such as HDTV's, DVD players including HD DVD/Blu-Ray Players, A/V receivers and projectors. This HDMI cable supports 720p, 1080i, and 1080p HDTV resolutions.
-Eliminates unnecessary signal conversions.
-Supports standard, enhanced, or high-definition video,340MHz max clock frequency.
-Supports up to 8 channel digital audio on a single cable eliminating costly A/D signal conversions.
-Bi-directional control signal transfer.
-10.2 Gbps bandwidth that suppors the future demand of HD displays
-Simple, user-friendly connector.
-HDCP (High-Bandwidth Digital Content Protection) Compliant
-Fully Compatible with new HDMI 1.4 specification and HDMI 1.3b or below



Order Information

Product No.: KLS17-HCP-03-V1.3B-G-1.50M-B-24AWG-Y

- **Part No.**
- **Series No.**
- **Availble version:V1.3B,V1.3C,V1.4**
- **Connector Plating:G=24K Gold-plated N=Nickel-plated**
- **Cable Length:1.50M and Other Length**
- **Cable Color:L=Blue B=Black E=Beige R=Red G=Green**
- **Cable type:24AWG,26AWG,28AWG,30AWG**
- **Ferrite Core Optional:Y=With N=Without**

KLS electronic
www.cnkls.com

HDMI / DVI Cable Processing Series

KLS17-HCP-04 (HDMI To HDMI)



Material:
- 99.99% oxygen-free, solid-copper high-purity conductors reduce signal distortion
- Quad-shielding isolates from outside noise for superior clarity
- Precision formulated, polyethylene dielectric material maintains stronger signals
- Impedance-matched, twisted-pair construction reduces cross talk and interference
- Integrated strain relief protects against wire damage for consistently high quality
- Abrasion resistant, flexible PVC jacket maintains integrity, even when bent
- 24k gold-plated connectors create precise contact for low signal loss

Electrical Characteristics:
-This HDMI Audio/Video Cable V1.3 OR V1.4 provides a high quality interface between any HDMI-enabled audio/video source, such as HDTV's, DVD players including HD DVD/Blu-Ray Players, A/V receivers and projectors. This HDMI cable supports 720p, 1080i, and 1080p HDTV resolutions.
-Eliminates unnecessary signal conversions.
-Supports standard, enhanced, or high-definition video,340MHz max clock frequency.
-Supports up to 8 channel digital audio on a single cable eliminating costly A/D signal conversions.
-Bi-directional control signal transfer.
-10.2 Gbps bandwidth that suppors the future demand of HD displays
-Simple, user-friendly connector.
-HDCP (High-Bandwidth Digital Content Protection) Compliant
-Fully Compatible with new HDMI 1.4 specification and HDMI 1.3b or below

Connector A: HDMI 19P Male Type
Connector B: HDMI 19P Male Type
Connector Plating:24K Gold-plated
Cable Length:1.50 Metre
Cable Color:Black
Cable Type:24AWG,26AWG,28AWG, 30AWG Standard
Ferrite Core Optional:With Or Without

KLS17-HCP-04B:



Order Information

Product No.: KLS17-HCP-04A-V1.3B-G-1.50M-B-24AWG-Y

- **Part No.**
- **Series No.**
- **Availble version:V1.3B,V1.3C,V1.4**
- **Connector Plating:G=24K Gold-plated N=Nickel-plated**
- **Cable Length:1.50M and Other Length**
- **Cable Color:L=Blue B=Black E=Beige R=Red G=Green**
- **Cable type:24AWG,26AWG,28AWG,30AWG**
- **Ferrite Core Optional:Y=With N=Without**

HDMI / DVI Cable Processing Series

KLS17-HCP-05 (HDMI To HDMI)



Material:
- 99.99% oxygen-free, solid-copper high-purity conductors reduce signal distortion
- Quad-shielding isolates from outside noise for superior clarity
- Precision formulated, polyethylene dielectric material maintains stronger signals
- Impedance-matched, twisted-pair construction reduces cross talk and interference
- Integrated strain relief protects against wire damage for consistently high quality
- Abrasion resistant, flexible PVC jacket maintains integrity, even when bent
- 24k gold-plated connectors create precise contact for low signal loss

Electrical Characteristics:
-This HDMI Audio/Video Cable V1.3 OR V1.4 provides a high quality interface between any HDMI-enabled audio/video source, such as HDTV's, DVD players including HD DVD/Blu-Ray Players, A/V receivers and projectors. This HDMI cable supports 720p, 1080i, and 1080p HDTV resolutions.
-Eliminates unnecessary signal conversions.
-Supports standard, enhanced, or high-definition video,340MHz max clock frequency.
-Supports up to 8 channel digital audio on a single cable eliminating costly A/D signal conversions.
-Bi-directional control signal transfer.
-10.2 Gbps bandwidth that suppors the future demand of HD displays
-Simple, user-friendly connector.
-HDCP (High-Bandwidth Digital Content Protection) Compliant
-Fully Compatible with new HDMI 1.4 specification and HDMI 1.3b or below

Connector A: HDMI 19P Male Type
Connector B: HDMI 19P Male Type
Connector Plating:24K Gold-plated
Cable Length:1.50 Metre
Cable Color:Black
Cable Type:24AWG,26AWG,28AWG, 30AWG Standard
Ferrite Core Optional:With Or Without

KLS17-HCP-05B:

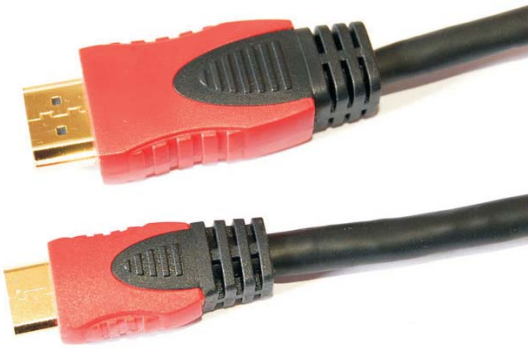

KLS17-HCP-05C:



Order Information

Product No.: KLS17-HCP-05A-V1.3B-G-1.50M-B-24AWG-Y

- **Part No.**
- **Series No.**
- **Availble version:V1.3B,V1.3C,V1.4**
- **Connector Plating:G=24K Gold-plated N=Nickel-plated**
- **Cable Length:1.50M and Other Length**
- **Cable Color:L=Blue B=Black E=Beige R=Red G=Green**
- **Cable type:24AWG,26AWG,28AWG,30AWG**
- **Ferrite Core Optional:Y=With N=Without**

HDMI / DVI Cable Processing Series

KLS17-HCP-06 (HDMI To HDMI)



Material:
- 99.99% oxygen-free, solid-copper high-purity conductors reduce signal distortion
- Quad-shielding isolates from outside noise for superior clarity
- Precision formulated, polyethylene dielectric material maintains stronger signals
- Impedance-matched, twisted-pair construction reduces cross talk and interference
- Integrated strain relief protects against wire damage for consistently high quality
- Abrasion resistant, flexible PVC jacket maintains integrity, even when bent
- 24k gold-plated connectors create precise contact for low signal loss

Electrical Characteristics:
-This HDMI Audio/Video Cable V1.3 OR V1.4 provides a high quality interface between any HDMI-enabled audio/video source, such as HDTV's, DVD players including HD DVD/Blu-Ray Players, A/V receivers and projectors. This HDMI cable supports 720p, 1080i, and 1080p HDTV resolutions.
-Eliminates unnecessary signal conversions.
-Supports standard, enhanced, or high-definition video,340MHz max clock frequency.
-Supports up to 8 channel digital audio on a single cable eliminating costly A/D signal conversions.
-Bi-directional control signal transfer.
-10.2 Gbps bandwidth that suppors the future demand of HD displays
-Simple, user-friendly connector.
-HDCP (High-Bandwidth Digital Content Protection) Compliant
-Fully Compatible with new HDMI 1.4 specification and HDMI 1.3b or below

Connector A: HDMI 19P Male Type
Connector B: HDMI 19P Male Type
Connector Plating:24K Gold-plated
Cable Length:1.50 Metre
Cable Color:Black
Cable Type:24AWG,26AWG,28AWG, 30AWG Standard
Ferrite Core Optional:With Or Without

KLS17-HCP-06B



KLS17-HCP-06C



KLS17-HCP-06D



Order Information

Product No.: KLS17-HCP-06A-V1.3B-G-1.50M-B-24AWG-Y

- **Part No.**
- **Series No.**
- **Availble version:V1.3B,V1.3C,V1.4**
- **Connector Plating:G=24K Gold-plated N=Nickel-plated**
- **Cable Length:1.50M and Other Length**
- **Cable Color:L=Blue B=Black E=Beige R=Red G=Green**
- **Cable type:24AWG,26AWG,28AWG,30AWG**
- **Ferrite Core Optional:Y=With N=Without**

HDMI / DVI Cable Processing Series

KLS17-HCP-07 (HDMI To HDMI)



Material:
- 99.99% oxygen-free, solid-copper high-purity conductors reduce signal distortion
- Quad-shielding isolates from outside noise for superior clarity
- Precision formulated, polyethylene dielectric material maintains stronger signals
- Impedance-matched, twisted-pair construction reduces cross talk and interference
- Integrated strain relief protects against wire damage for consistently high quality
- Abrasion resistant, flexible PVC jacket maintains integrity, even when bent
- 24k gold-plated connectors create precise contact for low signal loss

Electrical Characteristics:
-This HDMI Audio/Video Cable V1.3 OR V1.4 provides a high quality interface between any HDMI-enabled audio/video source, such as HDTV's, DVD players including HD DVD/Blu-Ray Players, A/V receivers and projectors. This HDMI cable supports 720p, 1080i, and 1080p HDTV resolutions.
-Eliminates unnecessary signal conversions.
-Supports standard, enhanced, or high-definition video,340MHz max clock frequency.
-Supports up to 8 channel digital audio on a single cable eliminating costly A/D signal conversions.
-Bi-directional control signal transfer.
-10.2 Gbps bandwidth that suppors the future demand of HD displays
-Simple, user-friendly connector.
-HDCP (High-Bandwidth Digital Content Protection) Compliant
-Fully Compatible with new HDMI 1.4 specification and HDMI 1.3b or below

Connector A: HDMI 19P Male Type
Connector B: HDMI 19P Male Type
Connector Plating:24K Gold-plated
Cable Length:1.50 Metre
Cable Color:Black
Cable Type:24AWG,26AWG,28AWG, 30AWG Standard
Ferrite Core Optional:With Or Without

KLS17-HCP-07B:



Order Information

Product No.: KLS17-HCP-07A-V1.3B-G-1.50M-B-24AWG-Y

- **Part No.**
- **Series No.**
- **Availble version:V1.3B,V1.3C,V1.4**
- **Connector Plating:G=24K Gold-plated N=Nickel-plated**
- **Cable Length:1.50M and Other Length**
- **Cable Color:L=Blue B=Black E=Beige R=Red G=Green**
- **Cable type:24AWG,26AWG,28AWG,30AWG**
- **Ferrite Core Optional:Y=With N=Without**

HDMI / DVI Cable Processing Series

KLS17-HCP-08 (HDMI To HDMI)



Material:

- 99.99% oxygen-free, solid-copper high-purity conductors reduce signal distortion
- Quad-shielding isolates from outside noise for superior clarity
- Precision formulated, polyethylene dielectric material maintains stronger signals
- Impedance-matched, twisted-pair construction reduces cross talk and interference
- Integrated strain relief protects against wire damage for consistently high quality
- Abrasion resistant, flexible PVC jacket maintains integrity, even when bent
- 24k gold-plated connectors create precise contact for low signal loss

Electrical Characteristics:

-This HDMI Audio/Video Cable V1.3 OR V1.4 provides a high quality interface between any HDMI-enabled audio/video source, such as HDTV's, DVD players including HD DVD/Blu-Ray Players, A/V receivers and projectors. This HDMI cable supports 720p, 1080i, and 1080p HDTV resolutions.
-Eliminates unnecessary signal conversions.
-Supports standard, enhanced, or high-definition video,340MHz max clock frequency.
-Supports up to 8 channel digital audio on a single cable eliminating costly A/D signal conversions.
-Bi-directional control signal transfer.
-10.2 Gbps bandwidth that suppors the future demand of HD displays
-Simple, user-friendly connector.
-HDCP (High-Bandwidth Digital Content Protection) Compliant
-Fully Compatible with new HDMI 1.4 specification and HDMI 1.3b or below

Connector A: HDMI 19P Male Type
Connector B: HDMI 19P Male Type
Connector Plating:24K Gold-plated
Cable Length:1.50 Metre
Cable Color:Black
Cable Type:24AWG,26AWG,28AWG, 30AWG Standard
Ferrite Core Optional:With Or Without

KLS17-HCP-08B:



Order Information

Product No.: KLS17-HCP-08A-V1.3B-G-1.50M-B-24AWG-Y

- **Part No.**
- **Series No.**
- **Availble version:V1.3B,V1.3C,V1.4**
- **Connector Plating:G=24K Gold-plated**
  N=Nickel-plated
- **Cable Length:1.50M and Other Length**
- **Cable Color:L=Blue B=Black E=Beige R=Red G=Green**
- **Cable type:24AWG,26AWG,28AWG,30AWG**
- **Ferrite Core Optional:Y=With N=Without**

HDMI / DVI Cable Processing Series

KLS17-HCP-09 (HDMI To HDMI)



Material:

- 99.99% oxygen-free, solid-copper high-purity conductors reduce signal distortion
- Quad-shielding isolates from outside noise for superior clarity
- Precision formulated, polyethylene dielectric material maintains stronger signals
- Impedance-matched, twisted-pair construction reduces cross talk and interference
- Integrated strain relief protects against wire damage for consistently high quality
- Abrasion resistant, flexible PVC jacket maintains integrity, even when bent
- 24k gold-plated connectors create precise contact for low signal loss

Electrical Characteristics:

-This HDMI Audio/Video Cable V1.3 OR V1.4 provides a high quality interface between any HDMI-enabled audio/video source, such as HDTV's, DVD players including HD DVD/Blu-Ray Players, A/V receivers and projectors. This HDMI cable supports 720p, 1080i, and 1080p HDTV resolutions.
-Eliminates unnecessary signal conversions.
-Supports standard, enhanced, or high-definition video,340MHz max clock frequency.
-Supports up to 8 channel digital audio on a single cable eliminating costly A/D signal conversions.
-Bi-directional control signal transfer.
-10.2 Gbps bandwidth that suppors the future demand of HD displays
-Simple, user-friendly connector.
-HDCP (High-Bandwidth Digital Content Protection) Compliant
-Fully Compatible with new HDMI 1.4 specification and HDMI 1.3b or below

Connector A: HDMI 19P Male Type
Connector B: HDMI 19P Male Type
Connector Plating:24K Gold-plated
Cable Length:1.50 Metre
Cable Color:Black
Cable Type:24AWG,26AWG,28AWG, 30AWG Standard
Ferrite Core Optional:With Or Without

KLS17-HCP-09B:



Order Information

Product No.: KLS17-HCP-09A-V1.3B-G-1.50M-B-24AWG-Y

- **Part No.**
- **Series No.**
- **Availble version:V1.3B,V1.3C,V1.4**
- **Connector Plating:G=24K Gold-plated**
  N=Nickel-plated
- **Cable Length:1.50M and Other Length**
- **Cable Color:L=Blue B=Black E=Beige R=Red G=Green**
- **Cable type:24AWG,26AWG,28AWG,30AWG**
- **Ferrite Core Optional:Y=With N=Without**

HDMI / DVI Cable Processing Series

KLS17-HCP-10 (HDMI To HDMI)

Material:

- 99.99% oxygen-free, solid-copper high-purity conductors reduce signal distortion
- Quad-shielding isolates from outside noise for superior clarity
- Precision formulated, polyethylene dielectric material maintains stronger signals
- Impedance-matched, twisted-pair construction reduces cross talk and interference
- Integrated strain relief protects against wire damage for consistently high quality
- Abrasion resistant, flexible PVC jacket maintains integrity, even when bent
- 24k gold-plated connectors create precise contact for low signal loss

Electrical Characteristics:

-This HDMI Audio/Video Cable V1.3 OR V1.4 provides a high quality interface between any HDMI-enabled audio/video source, such as HDTV's, DVD players including HD DVD/Blu-Ray Players, A/V receivers and projectors. This HDMI cable supports 720p, 1080i, and 1080p HDTV resolutions.
-Eliminates unnecessary signal conversions.
-Supports standard, enhanced, or high-definition video,340MHz max clock frequency.
-Supports up to 8 channel digital audio on a single cable eliminating costly A/D signal conversions.
-Bi-directional control signal transfer.
-10.2 Gbps bandwidth that suppors the future demand of HD displays
-Simple, user-friendly connector.
-HDCP (High-Bandwidth Digital Content Protection) Compliant
-Fully Compatible with new HDMI 1.4 specification and HDMI 1.3b or below

Connector A: HDMI 19P Male Type
Connector B: HDMI 19P Male Type
Connector Plating:24K Gold-plated
Cable Length:1.50 Metre
Cable Color:Black
Cable Type:24AWG,26AWG,28AWG, 30AWG Standard
Ferrite Core Optional:With Or Without



Order Information

Product No.: KLS17-HCP- 10 -V1.3B-G-1.50M-B-24AWG-Y

- **Part No.**
- **Series No.**
- **Availble version:V1.3B,V1.3C,V1.4**
- **Connector Plating:G=24K Gold-plated N=Nickel-plated**
- **Cable Length:1.50M and Other Length**
- **Cable Color:L=Blue B=Black E=Beige R=Red G=Green**
- **Cable type:24AWG,26AWG,28AWG,30AWG**
- **Ferrite Core Optional:Y=With N=Without**

HDMI / DVI Cable Processing Series

KLS17-HCP-11 (HDMI To HDMI)



Material:

- 99.99% oxygen-free, solid-copper high-purity conductors reduce signal distortion
- Quad-shielding isolates from outside noise for superior clarity
- Precision formulated, polyethylene dielectric material maintains stronger signals
- Impedance-matched, twisted-pair construction reduces cross talk and interference
- Integrated strain relief protects against wire damage for consistently high quality
- Abrasion resistant, flexible PVC jacket maintains integrity, even when bent
- 24k gold-plated connectors create precise contact for low signal loss

Electrical Characteristics:

-This HDMI Audio/Video Cable V1.3 OR V1.4 provides a high quality interface between any HDMI-enabled audio/video source, such as HDTV's, DVD players including HD DVD/Blu-Ray Players, A/V receivers and projectors. This HDMI cable supports 720p, 1080i, and 1080p HDTV resolutions.
-Eliminates unnecessary signal conversions.
-Supports standard, enhanced, or high-definition video,340MHz max clock frequency.
-Supports up to 8 channel digital audio on a single cable eliminating costly A/D signal conversions.
-Bi-directional control signal transfer.
-10.2 Gbps bandwidth that suppors the future demand of HD displays
-Simple, user-friendly connector.
-HDCP (High-Bandwidth Digital Content Protection) Compliant
-Fully Compatible with new HDMI 1.4 specification and HDMI 1.3b or below

Connector A: HDMI 19P Male Type
Connector B: HDMI 19P Male Type
Connector Plating:24K Gold-plated
Cable Length:1.50 Metre
Cable Color:Black
Cable Type:24AWG,26AWG,28AWG, 30AWG Standard
Ferrite Core Optional:With Or Without

KLS17-HCP-11B:





Order Information

Product No.: KLS17-HCP-11A-V1.3B-G-1.50M-B-24AWG-Y

- **Part No.**
- **Series No.**
- **Availble version:V1.3B,V1.3C,V1.4**
- **Connector Plating:G=24K Gold-plated**
  N=Nickel-plated
- **Cable Length:1.50M and Other Length**
- **Cable Color:L=Blue B=Black E=Beige R=Red G=Green**
- **Cable type:24AWG,26AWG,28AWG,30AWG**
- **Ferrite Core Optional:Y=With N=Without**

HDMI / DVI Cable Processing Series

KLS17-HCP-12 (HDMI To HDMI)



Material:

- 99.99% oxygen-free, solid-copper high-purity conductors reduce signal distortion
- Quad-shielding isolates from outside noise for superior clarity
- Precision formulated, polyethylene dielectric material maintains stronger signals
- Impedance-matched, twisted-pair construction reduces cross talk and interference
- Integrated strain relief protects against wire damage for consistently high quality
- Abrasion resistant, flexible PVC jacket maintains integrity, even when bent
- 24k gold-plated connectors create precise contact for low signal loss

Electrical Characteristics:

-This HDMI Audio/Video Cable V1.3 OR V1.4 provides a high quality interface between any HDMI-enabled audio/video source, such as HDTV's, DVD players including HD DVD/Blu-Ray Players, A/V receivers and projectors. This HDMI cable supports 720p, 1080i, and 1080p HDTV resolutions.
-Eliminates unnecessary signal conversions.
-Supports standard, enhanced, or high-definition video,340MHz max clock frequency.
-Supports up to 8 channel digital audio on a single cable eliminating costly A/D signal conversions.
-Bi-directional control signal transfer.
-10.2 Gbps bandwidth that suppors the future demand of HD displays
-Simple, user-friendly connector.
-HDCP (High-Bandwidth Digital Content Protection) Compliant
-Fully Compatible with new HDMI 1.4 specification and HDMI 1.3b or below

Connector A: HDMI 19P Male Type
Connector B: HDMI 19P Male Type
Connector Plating:24K Gold-plated
Cable Length:1.50 Metre
Cable Color:Black
Cable Type:24AWG,26AWG,28AWG, 30AWG Standard
Ferrite Core Optional:With Or Without



KLS17-HCP-12B:

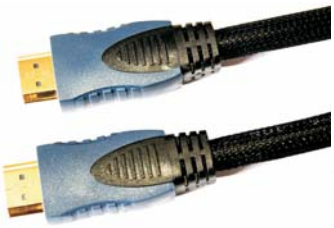

KLS17-HCP-12C:



KLS17-HCP-12D:



KLS17-HCP-12E:



KLS17-HCP-12F:



KLS17-HCP-12G:

Order Information

Product No.: KLS17-HCP-12A-V1.3B-G-1.50M-B-24AWG-Y

Part No.
Series No.
Availble version:V1.3B,V1.3C,V1.4
Connector Plating:G=24K Gold-plated
N=Nickel-plated
Cable Length:1.50M and Other Length
Cable Color:L=Blue B=Black E=Beige R=Red G=Green
Cable type:24AWG,26AWG,28AWG,30AWG
Ferrite Core Optional:Y=With N=Without

HDMI / DVI Cable Processing Series

KLS17-HCP-13 (HDMI To HDMI)

Material:

- 99.99% oxygen-free, solid-copper high-purity conductors reduce signal distortion
- Quad-shielding isolates from outside noise for superior clarity
- Precision formulated, polyethylene dielectric material maintains stronger signals
- Impedance-matched, twisted-pair construction reduces cross talk and interference
- Integrated strain relief protects against wire damage for consistently high quality
- Abrasion resistant, flexible PVC jacket maintains integrity, even when bent
- 24k gold-plated connectors create precise contact for low signal loss

Electrical Characteristics:

-This HDMI Audio/Video Cable V1.3 OR V1.4 provides a high quality interface between any HDMI-enabled audio/video source, such as HDTV's, DVD players including HD DVD/Blu-Ray Players, A/V receivers and projectors. This HDMI cable supports 720p, 1080i, and 1080p HDTV resolutions.
-Eliminates unnecessary signal conversions.
-Supports standard, enhanced, or high-definition video,340MHz max clock frequency.
-Supports up to 8 channel digital audio on a single cable eliminating costly A/D signal conversions.
-Bi-directional control signal transfer.
-10.2 Gbps bandwidth that suppors the future demand of HD displays
-Simple, user-friendly connector.
-HDCP (High-Bandwidth Digital Content Protection) Compliant
-Fully Compatible with new HDMI 1.4 specification and HDMI 1.3b or below

Connector A: HDMI 19P Male Type
Connector B: HDMI 19P Male Type
Connector Plating:24K Gold-plated
Cable Length:1.50 Metre
Cable Color:Black
Cable Type:24AWG,26AWG,28AWG, 30AWG Standard
Ferrite Core Optional:With Or Without



Order Information

Product No.: KLS17-HCP-13A-V1.3B-G-1.50M-B-24AWG-Y

- **Part No.**
- **Series No.**
- **Availble version:V1.3B,V1.3C,V1.4**
- **Connector Plating:G=24K Gold-plated N=Nickel-plated**
- **Cable Length:1.50M and Other Length**
- **Cable Color:L=Blue B=Black E=Beige R=Red G=Green**
- **Cable type:24AWG,26AWG,28AWG,30AWG**
- **Ferrite Core Optional:Y=With N=Without**

HDMI / DVI Cable Processing Series

KLS17-HCP-14 (HDMI To HDMI)

Connector A: HDMI 19P Male Type
Connector B: HDMI 19P Male Type
Connector Plating:24K Gold-plated
Cable Length:1.50 Metre
Cable Color:Black
Cable Type:24AWG,26AWG,28AWG, 30AWG Standard
Ferrite Core Optional:With Or Without

Material:
- 99.99% oxygen-free, solid-copper high-purity conductors reduce signal distortion
- Quad-shielding isolates from outside noise for superior clarity
- Precision formulated, polyethylene dielectric material maintains stronger signals
- Impedance-matched, twisted-pair construction reduces cross talk and interference
- Integrated strain relief protects against wire damage for consistently high quality
- Abrasion resistant, flexible PVC jacket maintains integrity, even when bent
- 24k gold-plated connectors create precise contact for low signal loss

Electrical Characteristics:
-This HDMI Audio/Video Cable V1.3 OR V1.4 provides a high quality interface between any HDMI-enabled audio/video source, such as HDTV's, DVD players including HD DVD/Blu-Ray Players, A/V receivers and projectors. This HDMI cable supports 720p, 1080i, and 1080p HDTV resolutions.
-Eliminates unnecessary signal conversions.
-Supports standard, enhanced, or high-definition video,340MHz max clock frequency.
-Supports up to 8 channel digital audio on a single cable eliminating costly A/D signal conversions.
-Bi-directional control signal transfer.
-10.2 Gbps bandwidth that suppors the future demand of HD displays
-Simple, user-friendly connector.
-HDCP (High-Bandwidth Digital Content Protection) Compliant
-Fully Compatible with new HDMI 1.4 specification and HDMI 1.3b or below



Order Information

Product No.: KLS17-HCP-14A-V1.3B-G-1.50M-B-24AWG-Y

Part No.
Series No.
Availble version:V1.3B,V1.3C,V1.4
Connector Plating:G=24K Gold-plated
N=Nickel-plated
Cable Length:1.50M and Other Length
Cable Color:L=Blue B=Black E=Beige R=Red G=Green
Cable type:24AWG,26AWG,28AWG,30AWG
Ferrite Core Optional:Y=With N=Without

HDMI / DVI Cable Processing Series

KLS17-HCP-15 (HDMI To HDMI)

Connector A: HDMI 19P Male Type
Connector B: HDMI 19P Male Type
Connector Plating:24K Gold-plated
Cable Length:1.50 Metre
Cable Color:Black
Cable Type:24AWG,26AWG,28AWG, 30AWG Standard
Ferrite Core Optional:With Or Without

Material:
- 99.99% oxygen-free, solid-copper high-purity conductors reduce signal distortion
- Quad-shielding isolates from outside noise for superior clarity
- Precision formulated, polyethylene dielectric material maintains stronger signals
- Impedance-matched, twisted-pair construction reduces cross talk and interference
- Integrated strain relief protects against wire damage for consistently high quality
- Abrasion resistant, flexible PVC jacket maintains integrity, even when bent
- 24k gold-plated connectors create precise contact for low signal loss

Electrical Characteristics:
-This HDMI Audio/Video Cable V1.3 OR V1.4 provides a high quality interface between any HDMI-enabled audio/video source, such as HDTV's, DVD players including HD DVD/Blu-Ray Players, A/V receivers and projectors. This HDMI cable supports 720p, 1080i, and 1080p HDTV resolutions.
-Eliminates unnecessary signal conversions.
-Supports standard, enhanced, or high-definition video,340MHz max clock frequency.
-Supports up to 8 channel digital audio on a single cable eliminating costly A/D signal conversions.
-Bi-directional control signal transfer.
-10.2 Gbps bandwidth that suppors the future demand of HD displays
-Simple, user-friendly connector.
-HDCP (High-Bandwidth Digital Content Protection) Compliant
-Fully Compatible with new HDMI 1.4 specification and HDMI 1.3b or below



Order Information

Product No.: KLS17-HCP-15A-V1.3B-G-1.50M-B-24AWG-Y

Part No.
Series No.
Availble version:V1.3B,V1.3C,V1.4
Connector Plating:G=24K Gold-plated
N=Nickel-plated
Cable Length:1.50M and Other Length
Cable Color:L=Blue B=Black E=Beige R=Red G=Green
Cable type:24AWG,26AWG,28AWG,30AWG
Ferrite Core Optional:Y=With N=Without

HDMI / DVI Cable Processing Series

KLS17-HCP-17 (HDMI To HDMI)

Connector A: HDMI 19P Male Type
Connector B: HDMI 19P Male Type
Connector Plating:24K Gold-plated
Cable Length:1.50 Metre
Cable Color:Black
Cable Type:24AWG,26AWG,28AWG, 30AWG Standard
Ferrite Core Optional:With Or Without

Material:
- 99.99% oxygen-free, solid-copper high-purity conductors reduce signal distortion
- Quad-shielding isolates from outside noise for superior clarity
- Precision formulated, polyethylene dielectric material maintains stronger signals
- Impedance-matched, twisted-pair construction reduces cross talk and interference
- Integrated strain relief protects against wire damage for consistently high quality
- Abrasion resistant, flexible PVC jacket maintains integrity, even when bent
- 24k gold-plated connectors create precise contact for low signal loss

Electrical Characteristics:

-This HDMI Audio/Video Cable V1.3 OR V1.4 provides a high quality interface between any HDMI-enabled audio/video source, such as HDTV's, DVD players including HD DVD/Blu-Ray Players, A/V receivers and projectors. This HDMI cable supports 720p, 1080i, and 1080p HDTV resolutions.
-Eliminates unnecessary signal conversions.
-Supports standard, enhanced, or high-definition video,340MHz max clock frequency.
-Supports up to 8 channel digital audio on a single cable eliminating costly A/D signal conversions.
-Bi-directional control signal transfer.
-10.2 Gbps bandwidth that suppors the future demand of HD displays
-Simple, user-friendly connector.
-HDCP (High-Bandwidth Digital Content Protection) Compliant
-Fully Compatible with new HDMI 1.4 specification and HDMI 1.3b or below



Order Information

Product No.: KLS17-HCP-17A-V1.3B-G-1.50M-B-24AWG-Y

- **Part No.**
- **Series No.**
- **Availble version:V1.3B,V1.3C,V1.4**
- **Connector Plating:G=24K Gold-plated**
  N=Nickel-plated
- **Cable Length:1.50M and Other Length**
- **Cable Color:L=Blue B=Black E=Beige R=Red G=Green**
- **Cable type:24AWG,26AWG,28AWG,30AWG**
- **Ferrite Core Optional:Y=With N=Without**

HDMI / DVI Cable Processing Series

KLS17-HCP-16 (HDMI To HDMI)

Connector A: HDMI 19P Male Type
Connector B: HDMI 19P Male Type
Connector Plating:24K Gold-plated
Cable Length:1.50 Metre
Cable Color:Black
Cable Type:24AWG,26AWG,28AWG, 30AWG Standard
Ferrite Core Optional:With Or Without

Material:
- 99.99% oxygen-free, solid-copper high-purity conductors reduce signal distortion
- Quad-shielding isolates from outside noise for superior clarity
- Precision formulated, polyethylene dielectric material maintains stronger signals
- Impedance-matched, twisted-pair construction reduces cross talk and interference
- Integrated strain relief protects against wire damage for consistently high quality
- Abrasion resistant, flexible PVC jacket maintains integrity, even when bent
- 24k gold-plated connectors create precise contact for low signal loss

Electrical Characteristics:

-This HDMI Audio/Video Cable V1.3 OR V1.4 provides a high quality interface between any HDMI-enabled audio/video source, such as HDTV's, DVD players including HD DVD/Blu-Ray Players, A/V receivers and projectors. This HDMI cable supports 720p, 1080i, and 1080p HDTV resolutions.
-Eliminates unnecessary signal conversions.
-Supports standard, enhanced, or high-definition video,340MHz max clock frequency.
-Supports up to 8 channel digital audio on a single cable eliminating costly A/D signal conversions.
-Bi-directional control signal transfer.
-10.2 Gbps bandwidth that suppors the future demand of HD displays
-Simple, user-friendly connector.
-HDCP (High-Bandwidth Digital Content Protection) Compliant
-Fully Compatible with new HDMI 1.4 specification and HDMI 1.3b or below



Order Information

Product No.: KLS17-HCP-16A-V1.3B-G-1.50M-B-24AWG-Y

- **Part No.**
- **Series No.**
- **Availble version:V1.3B,V1.3C,V1.4**
- **Connector Plating:G=24K Gold-plated**
  N=Nickel-plated
- **Cable Length:1.50M and Other Length**
- **Cable Color:L=Blue B=Black E=Beige R=Red G=Green**
- **Cable type:24AWG,26AWG,28AWG,30AWG**
- **Ferrite Core Optional:Y=With N=Without**

HDMI / DVI Cable Processing Series

KLS17-HCP-18 (HDMI To HDMI)

Connector A: HDMI 19P Male Type
Connector B: HDMI 19P Male Type
Connector Plating:24K Gold-plated
Cable Length:1.50 Metre
Cable Color:Black
Cable Type:24AWG,26AWG,28AWG, 30AWG Standard
Ferrite Core Optional:With Or Without

Material:
- 99.99% oxygen-free, solid-copper high-purity conductors reduce signal distortion
- Quad-shielding isolates from outside noise for superior clarity
- Precision formulated, polyethylene dielectric material maintains stronger signals
- Impedance-matched, twisted-pair construction reduces cross talk and interference
- Integrated strain relief protects against wire damage for consistently high quality
- Abrasion resistant, flexible PVC jacket maintains integrity, even when bent
- 24k gold-plated connectors create precise contact for low signal loss

Electrical Characteristics:

-This HDMI Audio/Video Cable V1.3 OR V1.4 provides a high quality interface between any HDMI-enabled audio/video source, such as HDTV's, DVD players including HD DVD/Blu-Ray Players, A/V receivers and projectors. This HDMI cable supports 720p, 1080i, and 1080p HDTV resolutions.
-Eliminates unnecessary signal conversions.
-Supports standard, enhanced, or high-definition video,340MHz max clock frequency.
-Supports up to 8 channel digital audio on a single cable eliminating costly A/D signal conversions.
-Bi-directional control signal transfer.
-10.2 Gbps bandwidth that suppors the future demand of HD displays
-Simple, user-friendly connector.
-HDCP (High-Bandwidth Digital Content Protection) Compliant
-Fully Compatible with new HDMI 1.4 specification and HDMI 1.3b or below



Order Information

Product No.: KLS17-HCP-18A-V1.3B-G-1.50M-B-24AWG-Y

- **Part No.**
- **Series No.**
- **Availble version:V1.3B,V1.3C,V1.4**
- **Connector Plating:G=24K Gold-plated**
  N=Nickel-plated
- **Cable Length:1.50M and Other Length**
- **Cable Color:L=Blue B=Black E=Beige R=Red G=Green**
- **Cable type:24AWG,26AWG,28AWG,30AWG**
- **Ferrite Core Optional:Y=With N=Without**

HDMI / DVI Cable Processing Series

KLS17-HCP-19 (HDMI To HDMI)

Connector A: HDMI 19P Male Type
Connector B: HDMI 19P Male Type
Connector Plating:24K Gold-plated
Cable Length:1.50 Metre
Cable Color:Black
Cable Type:24AWG,26AWG,28AWG, 30AWG Standard
Ferrite Core Optional:With Or Without

Material:
- 99.99% oxygen-free, solid-copper high-purity conductors reduce signal distortion
- Quad-shielding isolates from outside noise for superior clarity
- Precision formulated, polyethylene dielectric material maintains stronger signals
- Impedance-matched, twisted-pair construction reduces cross talk and interference
- Integrated strain relief protects against wire damage for consistently high quality
- Abrasion resistant, flexible PVC jacket maintains integrity, even when bent
- 24k gold-plated connectors create precise contact for low signal loss

Electrical Characteristics:

-This HDMI Audio/Video Cable V1.3 OR V1.4 provides a high quality interface between any HDMI-enabled audio/video source, such as HDTV's, DVD players including HD DVD/Blu-Ray Players, A/V receivers and projectors. This HDMI cable supports 720p, 1080i, and 1080p HDTV resolutions.
-Eliminates unnecessary signal conversions.
-Supports standard, enhanced, or high-definition video,340MHz max clock frequency.
-Supports up to 8 channel digital audio on a single cable eliminating costly A/D signal conversions.
-Bi-directional control signal transfer.
-10.2 Gbps bandwidth that suppors the future demand of HD displays
-Simple, user-friendly connector.
-HDCP (High-Bandwidth Digital Content Protection) Compliant
-Fully Compatible with new HDMI 1.4 specification and HDMI 1.3b or below



KLS17-HCP-19B:



KLS17-HCP-19C:



Order Information

Product No.: KLS17-HCP-19A-V1.3B-G-1.50M-B-24AWG-Y

- **Part No.**
- **Series No.**
- **Availble version:V1.3B,V1.3C,V1.4**
- **Connector Plating:G=24K Gold-plated N=Nickel-plated**
- **Cable Length:1.50M and Other Length**
- **Cable Color:L=Blue B=Black E=Beige R=Red G=Green**
- **Cable type:24AWG,26AWG,28AWG,30AWG**
- **Ferrite Core Optional:Y=With N=Without**

HDMI / DVI Cable Processing Series

KLS17-HCP-20 (HDMI To HDMI)

Connector A: HDMI 19P Male Type
Connector B: HDMI 19P Male Type
Connector Plating:24K Gold-plated
Cable Length:1.50 Metre
Cable Color:Black
Cable Type:24AWG,26AWG,28AWG, 30AWG Standard
Ferrite Core Optional:With Or Without

Material:
- 99.99% oxygen-free, solid-copper high-purity conductors reduce signal distortion
- Quad-shielding isolates from outside noise for superior clarity
- Precision formulated, polyethylene dielectric material maintains stronger signals
- Impedance-matched, twisted-pair construction reduces cross talk and interference
- Integrated strain relief protects against wire damage for consistently high quality
- Abrasion resistant, flexible PVC jacket maintains integrity, even when bent
- 24k gold-plated connectors create precise contact for low signal loss

Electrical Characteristics:

-This HDMI Audio/Video Cable V1.3 OR V1.4 provides a high quality interface between any HDMI-enabled audio/video source, such as HDTV's, DVD players including HD DVD/Blu-Ray Players, A/V receivers and projectors. This HDMI cable supports 720p, 1080i, and 1080p HDTV resolutions.
-Eliminates unnecessary signal conversions.
-Supports standard, enhanced, or high-definition video,340MHz max clock frequency.
-Supports up to 8 channel digital audio on a single cable eliminating costly A/D signal conversions.
-Bi-directional control signal transfer.
-10.2 Gbps bandwidth that suppors the future demand of HD displays
-Simple, user-friendly connector.
-HDCP (High-Bandwidth Digital Content Protection) Compliant
-Fully Compatible with new HDMI 1.4 specification and HDMI 1.3b or below



Order Information

Product No.: KLS17-HCP-20A-V1.3B-G-1.50M-B-24AWG-Y

- **Part No.**
- **Series No.**
- **Availble version:V1.3B,V1.3C,V1.4**
- **Connector Plating:G=24K Gold-plated**
  N=Nickel-plated
- **Cable Length:1.50M and Other Length**
- **Cable Color:L=Blue B=Black E=Beige R=Red G=Green**
- **Cable type:24AWG,26AWG,28AWG,30AWG**
- **Ferrite Core Optional:Y=With N=Without**

HDMI / DVI Cable Processing Series

KLS17-HCP-21 (HDMI To HDMI)

Connector A: HDMI 19P Male Type
Connector B: HDMI 19P Male Type
Connector Plating:24K Gold-plated
Cable Length:1.50 Metre
Cable Color:Black
Cable Type:24AWG,26AWG,28AWG, 30AWG Standard
Ferrite Core Optional:With Or Without

Material:
- 99.99% oxygen-free, solid-copper high-purity conductors reduce signal distortion
- Quad-shielding isolates from outside noise for superior clarity
- Precision formulated, polyethylene dielectric material maintains stronger signals
- Impedance-matched, twisted-pair construction reduces cross talk and interference
- Integrated strain relief protects against wire damage for consistently high quality
- Abrasion resistant, flexible PVC jacket maintains integrity, even when bent
- 24k gold-plated connectors create precise contact for low signal loss

Electrical Characteristics:

-This HDMI Audio/Video Cable V1.3 OR V1.4 provides a high quality interface between any HDMI-enabled audio/video source, such as HDTV's, DVD players including HD DVD/Blu-Ray Players, A/V receivers and projectors. This HDMI cable supports 720p, 1080i, and 1080p HDTV resolutions.
-Eliminates unnecessary signal conversions.
-Supports standard, enhanced, or high-definition video,340MHz max clock frequency.
-Supports up to 8 channel digital audio on a single cable eliminating costly A/D signal conversions.
-Bi-directional control signal transfer.
-10.2 Gbps bandwidth that suppors the future demand of HD displays
-Simple, user-friendly connector.
-HDCP (High-Bandwidth Digital Content Protection) Compliant
-Fully Compatible with new HDMI 1.4 specification and HDMI 1.3b or below



Order Information

Product No.: KLS17-HCP-21A-V1.3B-G-1.50M-B-24AWG-Y

- **Part No.**
- **Series No.**
- **Availble version:V1.3B,V1.3C,V1.4**
- **Connector Plating:G=24K Gold-plated**
  N=Nickel-plated
- **Cable Length:1.50M and Other Length**
- **Cable Color:L=Blue B=Black E=Beige R=Red G=Green**
- **Cable type:24AWG,26AWG,28AWG,30AWG**
- **Ferrite Core Optional:Y=With N=Without**

HDMI / DVI Cable Processing Series

KLS17-HCP-22 (HDMI To Mini HDMI)

Connector A: HDMI 19P Male Type
Connector B: Mini HDMI Male Type
Connector Plating:24K Gold-plated
Cable Length:1.50 Metre
Cable Color:Black
Cable Type:24AWG,26AWG,28AWG,30AWG Standard
Ferrite Core Optional:With Or Without



Order Information

Product No.: KLS17-HCP-22A-V1.3B-G-1.50M-B-24AWG-Y

- Part No.
- Series No.
- Availble version:V1.3B,V1.3C,V1.4
- Connector Plating:G=24K Gold-plated N=Nickel-plated
- Cable Length:1.50M and Other Length
- Cable Color:L=Blue B=Black E=Beige R=Red G=Green
- Cable type:24AWG,26AWG,28AWG,30AWG
- Ferrite Core Optional:Y=With N=Without

HDMI / DVI Cable Processing Series

KLS17-HCP-23 (HDMI To Mini HDMI)

Connector A: HDMI 19P Male Type
Connector B: Mini HDMI Male Type
Connector Plating:24K Gold-plated
Cable Length:1.50 Metre
Cable Color:Black
Cable Type:24AWG,26AWG,28AWG,30AWG Standard
Ferrite Core Optional:With Or Without



Order Information

Product No.: KLS17-HCP-23A-V1.3B-G-1.50M-B-24AWG-Y

- **Part No.**
- **Series No.**
- **Availble version:V1.3B,V1.3C,V1.4**
- **Connector Plating:G=24K Gold-plated**
  N=Nickel-plated
- **Cable Length:1.50M and Other Length**
- **Cable Color:L=Blue B=Black E=Beige R=Red G=Green**
- **Cable type:24AWG,26AWG,28AWG,30AWG**
- **Ferrite Core Optional:Y=With N=Without**

HDMI / DVI Cable Processing Series

KLS17-HCP-40-3 (HDMI To RCA)

Connector A: 1 x HDMI 19P Male Type
Connector B: 3 x RCA Plug Type
Connector Plating:24K Gold-plated
Cable Length:1.50 Metre
Cable Color:Black
Cable Type:24AWG,26AWG,28AWG,30AWG Standard
Ferrite Core Optional:With Or Without





Order Information

Product No.: KLS17-HCP-40-3-V1.3B-G-1.50M-B-24AWG-Y

- **Part No.**
- **Series No.**
- **Availble version:V1.3B,V1.3C,V1.4**
- **Connector Plating:G=24K Gold-plated**
  N=Nickel-plated
- **Cable Length:1.50M and Other Length**
- **Cable Color:L=Blue B=Black E=Beige R=Red G=Green**
- **Cable type:24AWG,26AWG,28AWG,30AWG**
- **Ferrite Core Optional:Y=With N=Without**

HDMI / DVI Cable Processing Series

KLS17-HCP-40-5 (HDMI To RCA)

Connector A: 1 x HDMI 19P Male Type
Connector B: 5 x RCA Plug Type
Connector Plating:24K Gold-plated
Cable Length:1.50 Metre
Cable Color:Black
Cable Type:24AWG,26AWG,28AWG,30AWG Standard
Ferrite Core Optional:With Or Without



Order Information

Product No.: KLS17-HCP-40-5-V1.3B-G-1.50M-B-24AWG-Y

- **Part No.**
- **Series No.**
- **Availble version:V1.3B,V1.3C,V1.4**
- **Connector Plating:G=24K Gold-plated**
  N=Nickel-plated
- **Cable Length:1.50M and Other Length**
- **Cable Color:L=Blue B=Black E=Beige R=Red G=Green**
- **Cable type:24AWG,26AWG,28AWG,30AWG**
- **Ferrite Core Optional:Y=With N=Without**

KLS electronic
www.cnkls.com

HDMI / DVI Cable Processing Series

KLS17-HCP-41-5 (HDMI To RCA)

Connector A: 1 x HDMI 19P Male Type
Connector B: 5 x RCA Plug Type
Connector Plating:24K Gold-plated
Cable Length:1.50 Metre
Cable Color:Black
Cable Type:24AWG,26AWG,28AWG,30AWG Standard
Ferrite Core Optional:With Or Without



Order Information

Product No.: KLS17-HCP-41-5-V1.3B-G-1.50M-B-24AWG-Y

- Part No.
- Series No.
- Availble version:V1.3B,V1.3C,V1.4
- Connector Plating:G=24K Gold-plated N=Nickel-plated
- Cable Length:1.50M and Other Length
- Cable Color:L=Blue B=Black E=Beige R=Red G=Green
- Cable type:24AWG,26AWG,28AWG,30AWG
- Ferrite Core Optional:Y=With N=Without

HDMI / DVI Cable Processing Series

KLS17-HCP-50 (DVI To DVI Series)

Connector A: DVI24+1 Male Type
Connector B: DVI24+1 Male Type
Cable Length:1.50 Metre
Hood And Cable Color:Black
Cable type: XX



Order Information

Product No.: KLS17-HCP-50A-1.50M-B-Y-XX

- **Part No.**
- **Series No.**
- **50A=DVI24+1Male Type**
  50B=DVI24+5Male Type
- **Cable Length: 1.50M and Other Length**
- **Hood And Cable Color: B=Black E=Beige**
- **Ferrite Core Optional:Y=With N=Without**
- **XX:Cable type**

KLS electronic
www.cnkls.com

HDMI / DVI Cable Processing Series

KLS17-HCP-51 (DVI To HDMI)



Connector A: DVI (24+1) Male Type
Connector B: HDMI 19P Male Type
Connector Plating:24K Gold-plated
Cable Length:1.50 Metre
Cable Color:Black
Cable Type:24AWG,26AWG,28AWG,30AWG Standard
Ferrite Core Optional:With Or Without



Order Information

Product No.: KLS17-HCP-51A-V1.3B-G-1.50M-B-24AWG-Y

- **Part No.**
- **Series No.**
- **51A=DVI(24+1) MALE**
- **51B=DVI(24+5) MALE**
- **Availble version:V1.3B,V1.3C,V1.4**
- **Connector Plating:G=24K Gold-plated**
- **N=Nickel-plated**
- **Cable Length:1.50M and Other Length**
- **Cable Color:L=Blue B=Black E=Beige R=Red G=Green**
- **Cable type:24AWG,26AWG,28AWG,30AWG**
- **Ferrite Core Optional:Y=With N=Without**

HDMI / DVI Cable Processing Series

KLS17-HCP-52 (DVI To HDMI)

Connector A: DVI (24+1) Male Type
Connector B: HDMI 19P Male Type
Connector Plating:24K Gold-plated
Cable Length:1.50 Metre
Cable Color:Black
Cable Type:24AWG,26AWG,28AWG,30AWG Standard
Ferrite Core Optional:With Or Without



Order Information

Product No.: KLS17-HCP-52A-V1.3B-G-1.50M-B-24AWG-Y

- **Part No.**
- **Series No.**
- **52A=DVI(24+1) MALE**
- **52B=DVI(24+5) MALE**
- **Availble version:V1.3B,V1.3C,V1.4**
- **Connector Plating:G=24K Gold-plated**
- **N=Nickel-plated**
- **Cable Length:1.50M and Other Length**
- **Cable Color:L=Blue B=Black E=Beige R=Red G=Green**
- **Cable type:24AWG,26AWG,28AWG,30AWG**
- **Ferrite Core Optional:Y=With N=Without**

HDMI / DVI Cable Processing Series

KLS17-HCP-53 (DVI To HDMI)

Connector A: DVI (24+1) Male Type
Connector B: HDMI 19P Male Type
Connector Plating:24K Gold-plated
Cable Length:1.50 Metre
Cable Color:Black
Cable Type:24AWG,26AWG,28AWG,30AWG Standard
Ferrite Core Optional:With Or Without





Order Information

Product No.: KLS17-HCP-53A-V1.3B-G-1.50M-B-24AWG-Y

- **Part No.**
- **Series No.**
  53A=DVI(24+1) MALE
  53B=DVI(24+5) MALE
- **Availble version:V1.3B,V1.3C,V1.4**
- **Connector Plating:G=24K Gold-plated**
  N=Nickel-plated
- **Cable Length:1.50M and Other Length**
- **Cable Color:L=Blue B=Black E=Beige R=Red G=Green**
- **Cable type:24AWG,26AWG,28AWG,30AWG**
- **Ferrite Core Optional:Y=With N=Without**

HDMI / DVI Cable Processing Series

KLS17-HCP-54 (DVI To HDMI)

Connector A: DVI (24+1) Male Type
Connector B: HDMI 19P Male Type
Connector Plating:24K Gold-plated
Cable Length:1.50 Metre
Cable Color:Black
Cable Type:24AWG,26AWG,28AWG,30AWG Standard
Ferrite Core Optional:With Or Without



Order Information

Product No.: KLS17-HCP-54A-V1.3B-G-1.50M-B-24AWG-Y

Part No.
Series No.
54A=DVI(24+1) MALE
54B=DVI(24+5) MALE
Availble version:V1.3B,V1.3C,V1.4
Connector Plating:G=24K Gold-plated
N=Nickel-plated
Cable Length:1.50M and Other Length
Cable Color:L=Blue B=Black E=Beige R=Red G=Green
Cable type:24AWG,26AWG,28AWG,30AWG
Ferrite Core Optional:Y=With N=Without

HDMI / DVI Cable Processing Series

KLS17-HCP-55 (DVI To RCA)

Connector A: 1 x DVI (24+1) Male Type
Connector B: 3 x RCA Plug Type
Connector Plating:24K Gold-plated
Cable Length:1.50 Metre
Cable Color:Black
Cable Type:24AWG,26AWG,28AWG,30AWG Standard
Ferrite Core Optional:With Or Without

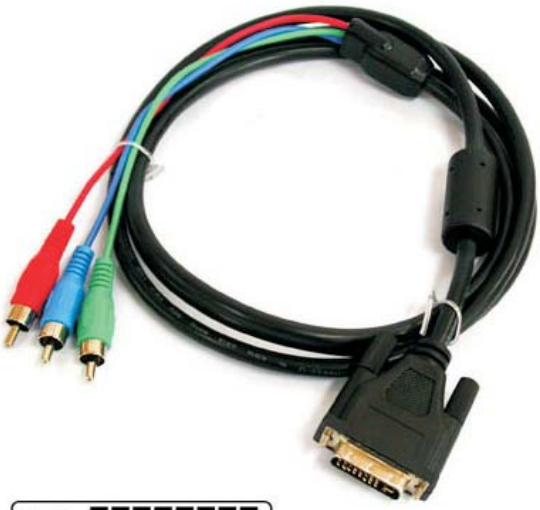

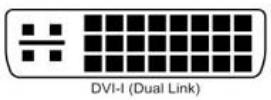

DVI-I (Dual Link)





Order Information

Product No.: KLS17-HCP-55A-1.50M-B-24AWG-Y

Part No.

Series No.

55A=DVI(24+1) MALE
54B=DVI(24+5) MALE

Cable Length:1.50M and Other Length

Cable Color:L=Blue B=Black E=Beige
R=Red G=Green

Availble version:V1.3B,V1.3C,V1.4

Ferrite Core Optional:Y=With N=Without

SCSI / Centronic Cable Processing Series

KLS17-CCP-01 (SCSI To SCSI)

Connector A: SCSI 26P Female Type (KLS1-SCSI-03)
Connector B: SCSI 26P Female Type (KLS1-SCSI-03)
Cable Length:1.50 Metre
Hood And Cable Color:Beige
Cable type: XX



Order Information

Product No.: KLS17-CCP-01-26F/26F-1.50M-E-XX

Part No.
Series No.
Pin/Pin: 14/14,20/20,26/26,36/36,50/50,68/68,100/100
F/F: Female/Female
Cable Length:1.50M and Other Length
Hood And Cable Color: B=Black E=Beige
XX:Cable type

SCSI / Centronic Cable Processing Series

KLS17-CCP-02 (SCSI To SCSI)

Connector A: SCSI 36P Female Type (KLS1-SCSI-03)
Connector B: SCSI 36P Female Type (KLS1-SCSI-03)
Cable Length:1.50 Metre
Hood And Cable Color:Beige
Cable type: XX



Order Information

Product No.: KLS17-CCP-02-36F/36F-1.50M-E-XX

Part No.
Series No.
Pin/Pin: 14/14,20/20,26/26,36/36,50/50,68/68,100/100
F/F: Female/Female
Cable Length:1.50M and Other Length
Hood And Cable Color: B=Black E=Beige
XX:Cable type

SCSI / Centronic Cable Processing Series

KLS17-CCP-03 (SCSI To SCSI)

METAL HOOD
Connector A: SCSI 26P Female Type (KLS1-SCSI-03)
Connector B: SCSI 26P Female Type (KLS1-SCSI-03)
Cable Length:1.50 Metre
Metal Hood And Cable Color:Black
Cable type: XX



Order Information

Product No.: KLS17-CCP-03-26F/26F-1.50M-B-XX

Part No.
Series No.
Pin/Pin: 14/14,20/20,26/26,36/36,50/50,68/68,100/100
F/F: Female/Female
Cable Length:1.50M and Other Length
Hood And Cable Color: B=Black E=Beige
XX:Cable type

SCSI / Centronic Cable Processing Series

KLS17-CCP-04 (57 To 57 Series)

Connector A: Centronic Connector 36P Male Type (KLS1-180-57B)
Connector B: Centronic Connector 36P Male Type (KLS1-180-57B)
Cable Length:1.50 Metre
Hood And Cable Color:Beige
Cable type: XX



Order Information

Product No.: KLS17-CCP-01-14M/14M-1.50M-E-XX

Part No.
Series No.
Pin/Pin: 14/14,20/20,26/26,36/36,50/50,68/68,100/100
F/F: Female/Female
Cable Length:1.50M and Other Length
Hood And Cable Color: B=Black E=Beige
XX:Cable type

SCSI / Centronic Cable Processing Series

KLS17-CCP-05 (57 To 57 Series)

Connector A: Centronic Connector 36P Male Type (KLS1-180-57B)
Connector B: Centronic Connector 36P Feale Type (KLS1-180-57B)
Cable Length:1.50 Metre
Hood And Cable Color:Beige
Cable type: XX



Order Information

Product No.: KLS17-CCP-05-14M/14F-1.50M-E-XX

Part No.
Series No.
Pin/Pin: 14/14,20/20,26/26,36/36,50/50,68/68,100/100
M/F:Male/Female
Cable Length:1.50M and Other Length
Hood And Cable Color: B=Black E=Beige
XX:Cable type

SCSI / Centronic Cable Processing Series

KLS17-CCP-06 (57 To DB Series)

Connector A: Centronic Connector 36P Male Type(KLS1-180-57B)
Connector B: DB25P Male Type (KLS1-213)
Cable Length:1.50 Metre
Hood And Cable Color:Beige
Cable type: XX



Order Information

Product No.: KLS17-CCP-06-36M/25M-1.50M-E-XX

Part No.
Series No.
36/25=SCSI Pin/DB Pin
M/M=Male/Male M/F=Male/Female
Cable Length:1.50M and Other Length
Hood And Cable Color: B=Black E=Beige
XX:Cable type

SCSI / Centronic Cable Processing Series

KLS17-CCP-07 (57 To DB Series)



Connector A: Centronic Connector 36P Male Type(KLS1-180-57B)
Connector B: DB25P Male Type (KLS1-213)
Cable Length:1.50 Metre
Hood And Cable Color:Beige
Cable type: XX

KLS17-CCP-07-36M/25F:



Order Information

Product No.: KLS17-CCP-07-36M/25M-1.50M-E-XX

Part No.
Series No.
36/25=SCSI Pin/DB Pin
M/M=Male/Male M/F=Male/Female
Cable Length:1.50M and Other Length
Hood And Cable Color: B=Black E=Beige
XX:Cable type

SCSI / Centronic Cable Processing Series

KLS17-CCP-08 (57 To DB Series)

Connector A: Centronic Connector 36P Male Type(KLS1-180-57B)
Connector B: DB25P Male Type (KLS1-213)
Cable Length:1.50 Metre
Hood And Cable Color:Beige
Cable type: XX



Order Information

Product No.: KLS17-CCP-08-36M/25M-1.50M-E-XX

Part No.
Series No.
36/25=SCSI Pin/DB Pin
M/M=Male/Male M/F=Male/Female
Cable Length:1.50M and Other Length
Hood And Cable Color: B=Black E=Beige
XX:Cable type

SCSI / Centronic Cable Processing Series

KLS17-CCP-09 (SCSI To DB Series)

Connector A: SCSI 26P Female Type (KLS1-SCSI-03)
Connector B: DB25P Male Type (KLS1-213)
Cable Length:1.50 Metre
Hood And Cable Color:Beige
Cable type: XX



Order Information

Product No.: KLS17-CCP-09-26F/25M-1.50M-E-XX

Part No.
Series No.
26/25=SCSI Pin/DB Pin
M/M=Male/Male M/F=Male/Female
Cable Length:1.50M and Other Length
Hood And Cable Color: B=Black E=Beige
XX:Cable type

SATA Cable Processing Series

KLS17-SCP-01

Connector A: SATA 7P Right Type
Connector B: SATA 7P Right Type
Cable Length:0.50 Metre
Cable type: XX
Cable Color:Red

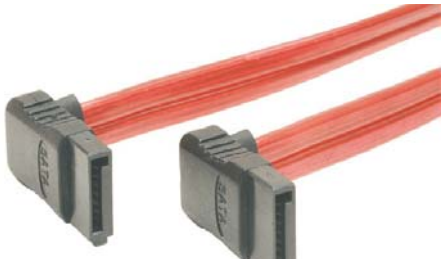

SATA

SATA 系列規格概述:

為使電腦系統傳輸速度更快，新一代傳輸技術 Serial ATA 介面，將與 USB2.0 同樣成為電腦系統產品設計主軸。

SATA Series Construction :

Serial ATA defines a maximum transfer rate of 1.5 gigabits per second (Gb/sec) or 150 MB/sec.
We can support standard type and latch type plug.

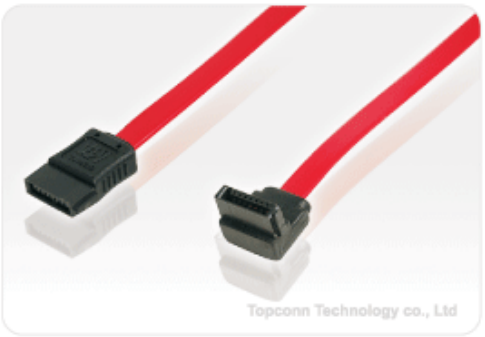



eSATA & SATA Series

- eSATA 7P Straight To 7P Straight Signal Round Cable
- eSATA 7P Straight To 7P Straight Signal Flat Cable
- SATA 7P Straight To 7P Straight Signal Flat Cable
- SATA 7P Straight To 7P Right Angle Signal Flat Cable
- SATA 7P Right Angle To 7P Right Angle Signal Flat Cable
- SATA 7+15P To SATA 7P With 4P Power
- SATA 15P To 4P Power Cable

Order Information

Product No.: KLS17-SCP-01-0.50M-R-XX

Part No.
Series No.
Cable Length:0.5M and other Length
Cable Color: R=Red L=Blue
XX: Cable type

SATA Cable Processing Series

KLS17-SCP-02

Connector A: SATA 7P Right Type
Connector B: SATA 7P Right Type
Cable Length:0.50 Metre
Cable type: XX
Cable Color:Red



SATA

SATA 系列規格概述:

為使電腦系統傳輸速度更快，新一代傳輸技術 Serial ATA 介面，將與 USB2.0 同樣成為電腦系統產品設計主軸。

SATA Series Construction :

Serial ATA defines a maximum transfer rate of 1.5 gigabits per second (Gb/sec) or 150 MB/sec.
We can support standard type and latch type plug.

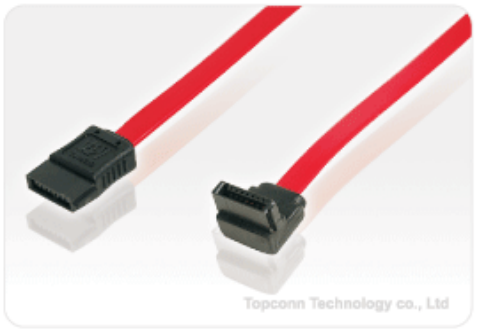



eSATA & SATA Series

- eSATA 7P Straight To 7P Straight Signal Round Cable
- eSATA 7P Straight To 7P Straight Signal Flat Cable
- SATA 7P Straight To 7P Straight Signal Flat Cable
- SATA 7P Straight To 7P Right Angle Signal Flat Cable
- SATA 7P Right Angle To 7P Right Angle Signal Flat Cable
- SATA 7+15P To SATA 7P With 4P Power
- SATA 15P To 4P Power Cable

Order Information

Product No.: KLS17-SCP-02-0.50M-R-XX

Part No.
Series No.
Cable Length:0.50M and other Length
Cable Color: R=Red L=Blue
XX: Cable type

SATA Cable Processing Series

KLS17-SCP-03

Connector A: SATA 7P Straight Type
Connector B: SATA 7P Right Type
Cable Length:0.50 Metre
Cable type: XX
Cable Color:Red



SATA

SATA 系列規格概述:

為使電腦系統傳輸速度更快，新一代傳輸技術 Serial ATA 介面，將與 USB2.0 同樣成為電腦系統產品設計主軸。

SATA Series Construction :

Serial ATA defines a maximum transfer rate of 1.5 gigabits per second (Gb/sec) or 150 MB/sec.
We can support standard type and latch type plug.

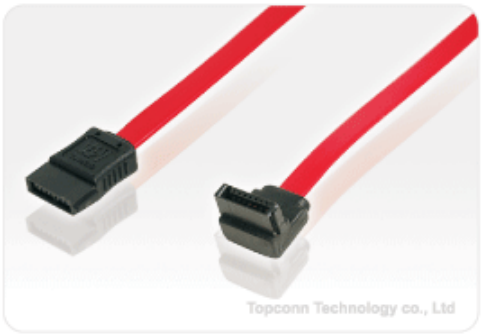



eSATA & SATA Series

- eSATA 7P Straight To 7P Straight Signal Round Cable
- eSATA 7P Straight To 7P Straight Signal Flat Cable
- SATA 7P Straight To 7P Straight Signal Flat Cable
- SATA 7P Straight To 7P Right Angle Signal Flat Cable
- SATA 7P Right Angle To 7P Right Angle Signal Flat Cable
- SATA 7+15P To SATA 7P With 4P Power
- SATA 15P To 4P Power Cable

Order Information

Product No.: KLS17-SCP-03-0.50M-R-XX

Part No.
Series No.
Cable Length:0.50M and other Length
Cable Color: R=Red L=Blue
XX: Cable type

KLS electronic
www.cnkls.com

SATA Cable Processing Series

KLS17-SCP-04

Connector A: SATA 7P Straight Type
Connector B: SATA 7P Straight Type
Cable Length:0.50 Metre
Cable type: XX
Cable Color:Blue



Order Information

Product No.: KLS17-SCP-04-0.50M-L-XX

- **Part No.**
- **Series No.**
- **Cable Length:0.50M and other Length**
- **Cable Color: R=Red L=Blue**
- **XX: Cable type**

SATA Cable Processing Series

KLS17-SCP-05

Connector A: SATA 7P Straight Type
Connector B: SATA 7P Straight Type
Cable Length:0.50 Metre
Cable type: XX
Cable Color:Red



Order Information

Product No.: KLS17-SCP-05-0.50M-R-XX

- **Part No.**
- **Series No.**
- **Cable Length:0.50M and other Length**
- **Cable Color: R=Red L=Blue**
- **XX: Cable type**

KLS electronic
www.cnkls.com

SATA Cable Processing Series

KLS17-SCP-05

Connector A: SATA 7P Straight Type
Connector B: SATA 7P Right Type
Cable Length:0.50 Metre
Cable type: XX
Cable Color:Red



Order Information

Product No.: KLS17-SCP-06-0.50M-R-XX

- **Part No.**
- **Series No.**
- **Cable Length:0.50M and other Length**
- **Cable Color: R=Red L=Blue**
- **XX: Cable type**

KLS electronic
www.cnkls.com

SATA Cable Processing Series

KLS17-SCP-07



Order Information

Product No.: KLS17-SCP-07-0.50M-XX

- Part No.
- Series No.
- Cable Length:0.50M and other Length
- XX: Cable type

KLS electronic
www.cnkls.com

SATA Cable Processing Series

KLS17-SCP-08



Order Information

Product No.: KLS17-SCP-08-0.50M-XX

- Part No.
- Series No.
- Cable Length:0.50M and other Length
- XX: Cable type

SATA Cable Processing Series

KLS17-SCP-09

Connector A: SATA 7P+15P Straight Type
Connector B: SATA 7P Straight With 4P Power connector Type
Cable Length:0.50 Metre
Cable type: XX
Cable Color:Red



SATA

SATA 系列規格概述:

為使電腦系統傳輸速度更快，新一代傳輸技術 Serial ATA 介面，將與 USB2.0 同樣成為電腦系統產品設計主軸。

SATA Series Construction :

Serial ATA defines a maximum transfer rate of 1.5 gigabits per second (Gb/sec) or 150 MB/sec.
We can support standard type and latch type plug.

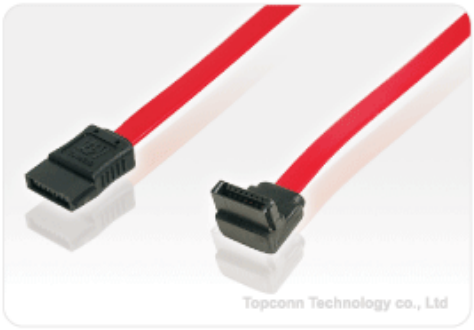



eSATA & SATA Series

- eSATA 7P Straight To 7P Straight Signal Round Cable
- eSATA 7P Straight To 7P Straight Signal Flat Cable
- SATA 7P Straight To 7P Straight Signal Flat Cable
- SATA 7P Straight To 7P Right Angle Signal Flat Cable
- SATA 7P Right Angle To 7P Right Angle Signal Flat Cable
- SATA 7+15P To SATA 7P With 4P Power
- SATA 15P To 4P Power Cable

Order Information

Product No.: KLS17-SCP-09-0.5M-R-XX

Part No.
Series No.
Cable Length:0.50M and other Length
Cable Color: R=Red L=Blue
XX: Cable type

SATA Cable Processing Series

KLS17-SCP-10



Order Information

Product No.: KLS17-SCP-10-0.50M-R-XX

- Part No.
- Series No.
- Cable Length:0.50M and other Length
- Cable Color: R=Red L=Blue
- XX: Cable type

KLS electronic
www.cnkls.com

SATA Cable Processing Series

KLS17-SCP-11



Order Information

Product No.: KLS17-SCP-11-0.50M-R-XX

- Part No.
- Series No.
- Cable Length:0.50M and other Length
- Cable Color: R=Red L=Blue
- XX: Cable type

SATA Cable Processing Series

KLS17-SCP-12





Order Information

Product No.: KLS17-SCP-12-0.50M-R-XX

- Part No.
- Series No.
- Cable Length:0.50M and other Length
- Cable Color: R=Red L=Blue
- XX: Cable type

Power Line Processing Series

KLS17-HL (Brazil Power cords)



Approval: UC
Rating: 2.5A 250V
P.S.: All our power leads are available in custom lengths, made-to-order cable terminations, custom stripping and in custom colors.

Style	Type No	Standard	Available with cords	AMP/V	Approvals
	HL-046	ABNT NBR NM 60884-1/2004;NBR 14136/2002	H03VVH2-F 2×0.75mm^2	10A 250V ~	
			H05VVH2-F 2×0.75mm^2	10A 250V ~	
			H05VVH2-F 2×1.0mm^2	10A 250V ~	
			H03VV-F 2×0.75mm^2	10A 250V ~	
			H05VV-F 2×0.75mm^2	10A 250V ~	
	HL-047	ABNT NBR NM 60884-1/2004;NBR 14136/2002	H03VV-F 3G 0.75mm^2	10A 250V ~	
			H05VV-F 3G 0.75mm^2	10A 250V ~	
			H05VV-F 3G 1.0mm^2	10A 250V ~	
			H05VV-F 3G 1.5 mm^2	10A 250V ~	
	HL-047 + HL-052	NBR14136 IEC60884-1 NE50075	H03VV-F 3G 0.75mm^2	2.5A 250V ~	
			H05VV-F 3G 0.75mm^2	2.5A 250V ~	
			H05VV-F 3G 1.0mm^2	2.5A 250V ~	
					
	HL-047 + HL-026	NBR14136 IEC60320 IEC60320-1/2001	H05VV-F 3G 0.75mm^2	10A 250V ~	
			H05VV-F 3G 1.0mm^2	10A 250V ~	
					

Power Line Processing Series

KLS17-HL (Brazil Power cords)

Style	Type No	Standard	Available with cords	AMP/V	Approvals
	HL-047 + HL-029	NBR14136 IEC60320 IEC60320-1/2001	H05VV-F 3G 0.75mm^2 H05VV-F 3G 1.0mm^2	10A 250V ~ 10A 250V ~	
	HL-046 + HL-028	NBR14136 IEC60320 IEC60320-1/2001	H03VVH2-F 2×0.75mm^2 H05VVH2-F 2×0.75mm^2	2.5A 250V ~ 2.5A 250V ~	
	HL-046L+HL-028S	NBR14136 IEC60320 IEC60320-1/2001	H03VVH2-F 2×0.75mm^2	2.5A 250V ~	

Order Information

Product No.: KLS17-HL046-1.50M-B-XX

- **Part No.**
- **Series No.**
- **Cable Length:1.50M and Other Length**
- **Cable Color: B=Black GR=Gray**
- **XX:Cable type**

Power Line Processing Series

KLS17-HL (Russia Power cords)



Approval: GOST
Rating: 2.5A 250V
P.S.: All our power leads are available in custom lengths, made-to-order cable terminations, custom stripping and in custom colors.

Style	Type No	Standard	Available with cords	AMP/V	Approvals
	HL-014 + HL-026/ HL-029	IEC60884-1 CEE7-VII IEC60320-1 C13	H05VV-F 3G 0.75mm² H05VV-F 3G 1.00mm²	10A 250V ~ 10A 250V ~	
	HL-013 + HL-026/ HL-029	IEC60884-1 CEE7-VII IEC60320-1 C13	H05VV-F 3G 0.75mm² H05VV-F 3G 1.00mm²	10A 250V ~ 10A 250V ~	
	HL-024 + HL-028	DIN EN 60766(VDE 0626):1996-06;EN60799:1998	H03VVH2-F 2×0.5mm² H03VVH2-F 2×0.75mm² H05VVH2-F 2×0.75mm²	2.5A 250V ~ 2.5A 250V ~ 2.5A 250V ~	
	HL-014/ HL-013+ HL-052	IEC60884-1 CEE7-VII	H05VV-F 3G 0.75mm² H05VV-F 3G 1.00mm² H03VV-F 3G 0.75mm²	2.5A 250V ~ 2.5A 250V ~ 2.5A 250V ~	

Order Information

Product No.: KLS17-HL014-HL026/HL029-1.50M-B-XX

- **Part No.**
- **Series No.**
- **Cable Length:1.50M and Other Length**
- **Cable Color: B=Black GR=Gray**
- **XX:Cable type**

Power Line Processing Series

KLS17-HL (South Africa Power cords)


YP51+SM112

Approval: SABS
Rating: 2.5A 250V
P.S.: All our power leads are available in custom lengths, made-to-order cable terminations, custom stripping and in custom colors.

Style	Type No	Standard	Available with cords	AMP/V	Approvals
	HL-024L + HL-028S	SANS164-4 IEC60320-1 C7	H03VVH2-F 2X0.75mm²	2.5A 250V ~	
					
	HL-030 + HL-028/HL-028L/HL-028S	SANS164-3 IEC60320-1 C7	H03VVH2-F 2X0.75mm² H05VVH2-F 2X0.75mm²	2.5A 250V ~ 2.5A 250V ~ 2.5A 250V ~	
					
	HL-035 + HL-028/HL-028L/HL-028S	SANS164-1 IEC60320-1 C7	H03VVH2-F 2X0.75mm² H05VVH2-F 2X0.75mm²	2.5A 250V ~ 2.5A 250V ~	
					
	HL-035 + HL-052/ HL-052L	SANS164-1 IEC60320-1 C5	H05VV-F 3G 0.75mm² H05VV-F 3G 1.00mm² H03VV-F 3G0.75mm²	2.5A 250V ~ 2.5A 250V ~ 2.5A 250V ~	
					

Power Line Processing Series

KLS17-HL (South Africa Power cords)

Style	Type No	Standard	Available with cords	AMP/V	Approvals
	HL-030 + HL-052L	SANS164-3 IEC60320-1 C5	H05VV-F 3G 0.75mm^2	2.5A 250V~	
			H05VV-F 3G 1.00mm^2	2.5A 250V~	
			H03VV-F 3G0.75mm^2	2.5A 250V~	
					SABS
 					

Order Information

Product No.: KLS17-HL024L/HL028S-1.50M-B-XX

- **Part No.**
- **Series No.**
- **Cable Length:1.50M and Other Length**
- **Cable Color: B=Black GR=Gray**
- **XX:Cable type**

Power Line Processing Series

KLS17-SH (Australia Power cords)


SH051+SH006

P.S.: All our power leads are available in custom lengths, made-to-order cable terminations, custom stripping and in custom colors.

Style	Standard	Available with Cords		Approvals
 SH051	AS 3112	H05VV-F 0.75mm/3C H05VV-F 1.0mm/3C	10A AC250V 10A AC250V	

Style	Standard	Available with Cords		Approvals
 SH006	AS 3109.1 IEC 320-1 SHEET C13	H05VV-F 0.75mm/3C H05VV-F 1.0mm/3C	10A AC250V 10A AC250V	

Style	Standard	Available with Cords		Approvals
 SM112	AS 3109.1 IEC 320-1 SHEET C5	H05VV-F 0.75mm/3C	2.5A AC250V	

Style	Standard	Available with Cords		Approvals
 SH052	AS 3112	H03VVH2-F 0.75mm/2C H05VVH2-F 0.75mm/2C	7.5A AC250V 7.5A AC250V	

Power Line Processing Series

KLS17-SH (Australia Power cords)

Style	Standard	Available with Cords		Approvals
 SH103	AS 3109.1 IEC 320-1 SHEET C7	H03VVH2-F 0.75mm/2C	2.5A AC250V	

Style	Available with Cords	Approvals
 SH051+SH006	H05VV-F 0.75mm/3C H05VV-F 1.0mm/3C	

Style	Available with Cords	Approvals
 SH051+SM112	H05VV-F 0.75mm/3C	

Style	Available with Cords	Approvals
 SH052+SH103	H03VVH2-F 0.75mm/2C	

Order Information

Product No.: KLS17-SH051-1.50M-B-XX

- **Part No.**
- **Series No.**
- **Cable Length:1.50M and Other Length**
- **Cable Color: B=Black GR=Gray**
- **XX:Cable type**

Power Line Processing Series

KLS17-SH (European Power cords)



Style	Standard	Available with Cords		Approvals
 SH005	CEE7-VII	H03VV-F 0.75mm²/3C H05VV-F 0.75mm²/3C H05VV-F 1.0mm²/3C	16A 250V 16A 250V 16A 250V	

Style	Standard	Available with Cords		Approvals
 SH025	CEE7-VII	H05VV-F 0.75mm²/3C H05VV-F 1.0mm²/3C	16A 250V 16A 250V	

Style	Standard	Available with Cords		Approvals
 SH018	EN60320 IEC 320-2-2 SHEET E	H05VV-F 0.75mm²/3C H05VV-F 1.0mm²/3C	10A 250V 10A 250V	

Style	Standard	Available with Cords		Approvals
 SH006	EN60320 IEC 320-1 SHEET C13	H05VV-F 0.75mm²/3C H05VV-F 1.0mm²/3C	10A 250V 10A 250V	

Power Line Processing Series

KLS17-SH (European Power cords)

Style	Standard	Available with Cords		Approvals
 SM112	EN60320 IEC 320-1 SHEET C5	H05VV-F 0.75mm²/3C	2.5A 250V	VDE

Style	Standard	Available with Cords		Approvals
 SM112L	EN60320 IEC 320-1 SHEET C5	H05VV-F 0.75mm²/3C	2.5A 250V	VDE

Style	Standard	Available with Cords		Approvals
 YC12L	EN60320 IEC 320-1 SHEET C13	H05VV-F 0.75mm²/3C H05VV-F 1.0mm²/3C	10A 250V 10A 250V	

Style	Standard	Available with Cords		Approvals
 SH037	EN50075	H03VVH2-F 0.75mm²/2C	2.5A 250V	

Style	Standard	Available with Cords		Approvals
 YP24	CEE7-XVII	H03VV-F 0.75mm²/2C H03VVH2-F 0.75mm²/2C H05VV-F 0.75mm²/2C H05VV-F 1.0mm²/2C	16A 250V 16A 250V 16A 250V 16A 250V	

Power Line Processing Series

KLS17-SH (European Power cords)

Style	Standard	Available with Cords		Approvals
 SH103	EN60320 IEC 320-1 SHEET C7	H03VVH2-F 0.75mm²/2C	2.5A 250V	VDE

Style	Available with Cords	Approvals
 SH005+SH006	H05VV-F 0.75mm²/3C H05VV-F 1.0mm²/3C	

Style	Available with Cords	Approvals
 SH005+SM112	H05VV-F 0.75mm²/3C	

Style	Available with Cords	Approvals
 SH025+YC12L	H05VV-F 0.75mm²/3C H05VV-F 1.0mm²/3C	

Style	Available with Cords	Approvals
 SH025+SH006	H05VV-F 0.75mm²/3C H05VV-F 1.0mm²/3C	

Power Line Processing Series

KLS17-SH (European Power cords)

Style	Available with Cords	Approvals
 SH025+SM112	H05VV-F 0.75mm²/3C	

Style	Available with Cords	Approvals
 SH018+SH006	H05VV-F 0.75mm²/3C H05VV-F 1.0mm²/3C	

Style	Available with Cords	Approvals
 SH018+SM112	H05VV-F 0.75mm²/3C	

Style	Available with Cords	Approvals
 SH018+YC12L	H05VV-F 0.75mm²/3C H05VV-F 1.0mm²/3C	

Style	Available with Cords	Approvals
 SH037+SH103	H03VVH2-F 0.75mm²/2G	

Power Line Processing Series

KLS17-SH (European Power cords)

Style	Available with Cords	Approvals
 YP24+YC13	H03VVH2-F 0.75mm²/2G	

Style	Available with Cords	Approvals
 SH005+SM112L	H05VVH2-F 0.75mm²/2C	

Style	Available with Cords	Approvals
 SH025+SM112L	H05VV-F 0.75mm/3C	

Style	Available with Cords	Approvals
 SH018+SM112L	H05VV-F 0.75mm/3C	

P.S.: All our power leads are available in custom lengths, made-to-order cable terminations, custom stripping and in custom colors.

Order Information

Product No.: KLS17-SH005-1.50M-B-XX

- **Part No.**
- **Series No.**
- **Cable Length:1.50M and Other Length**
- **Cable Color: B=Black GR=Gray**
- **XX:Cable type**

Power Line Processing Series

KLS17-SH (India Power cords)

P.S.: All our power leads are available in custom lengths, made-to-order cable terminations, custom stripping and in custom colors.



Style	Type No	Standard	Available with cords	AMP/V	Approvals
	HL-067 + HL-028S	IS1293-2005 IEC60320-1 C7	H03VVH2-F 2X 0.75mm^2	2.5A 250V ~	
					
	HL-030	IS1293-2005	H05VV-F 3G 0.75mm^2	6A 250V ~	
			H05VV-F 3G 1.00mm^2	6A 250V ~	
			H03VV-F 3G 0.75mm^2	6A 250V ~	
			H05VV-F 2X 0.75mm^2	6A 250V ~	
			H05VV-F 2X 1.0mm^2	6A 250V ~	
			H03VVH2-F 2X0.75mm^2	6A 250V ~	
			H05VVH2-F 2X0.75mm^2	6A 250V ~	
			H05VVH2-F 2X1.0mm^2	6A 250V ~	
	HL-035	IS1293-2005	H05VV-F 3G 0.75mm^2	16A 250V ~	
			H05VV-F 3G 1.00mm^2	16A 250V ~	
			H05VV-F 3G 1.5mm^2	16A 250V ~	
			H03VV-F 3G 0.75mm^2	16A 250V ~	
			H05VV-F 2x 0.75mm^2 /1.00mm^2	16A 250V ~	
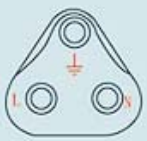			H03VVH2-F 2X 0.75mm^2	16A 250V ~	
			H05VVH2-F 2X 0.75mm^2	16A 250V ~	
			H05VVH2-F 2X 1.00mm^2	16A 250V ~	

Power Line Processing Series

KLS17-SH (India Power cords)

Style	Type No	Standard	Available with cords	AMP/V	Approvals
	HL-035 + HL-026/ HL-029	IS1293-2005 IEC60320-1 C13	H05VV-F 3G 0.75mm^2	10A 250V~	
			H05VV-F 3G 1.00mm^2	10A 250V~	
	 				

Order Information

Product No.: KLS17-HL067 / HL028S - 1.50M-B-XX

- **Part No.**
- **Series No.**
- **Cable Length:1.50M and Other Length**
- **Cable Color: B=Black GR=Gray**
- **XX:Cable type**

Power Line Processing Series

KLS17-SH (Japan Power cords)

P.S.: All our power leads are available in custom lengths, made-to-order cable terminations, custom stripping and in custom colors.


SH015+SH006

Style	Available with Cords	Approvals
 SH001+SH112	(H)VCTF 0.75mm²/3G	PS E JET

Style	Available with Cords	Approvals
 SH001+SH006L	(H)VCTF 0.75mm²/3G (H)VCTF 1.25mm²/3G	PS E JET

Style	Available with Cords	Approvals
 SH001Q+SH006L	(H)VCTF 0.75mm²/3G (H)VCTF 1.25mm²/3G	PS E JET

Style	Available with Cords	Approvals
 SH001Q+SH006	(H)VCTF 0.75mm²/3G (H)VCTF 1.25mm²/3G (H)VCTF 2.0mm²/3G	PS E JET

Power Line Processing Series

KLS17-SH (Japan Power cords)

Style	Available with Cords	Approvals
 SH015A+SH006	(H)VCTF 0.75mm²/3G (H)VCTF 1.25mm²/3G	PS E JET

Style	Available with Cords	Approvals
 SH015A+SH112	(H)VCTF 0.75mm²/3G	PS E JET

Style	Available with Cords	Approvals
 SH015A+SH006L	(H)VCTF 0.75mm²/3G (H)VCTF 1.25mm²/3G	PS E JET
 SH001+SH006	(H)VCTF 0.75mm²/3G (H)VCTF 1.25mm²/3G (H)VCTF 2.0mm²/3G	PS E JET

Power Line Processing Series

KLS17-SH (Japan Power cords)

Style	Available with Cords	Approvals
 SH015+SH103	(H)VFF 0.75mm²/2G (H)VCTFK 0.75mm²/2G	PS E JET

Style	Available with Cords	Approvals
 SH015+SH006	(H)VFF 0.75mm²/2G (H)VFF 1.25mm²/2G (H)VCTF 0.75mm²/2G (H)VCTF 1.25mm²/2G (H)VCTFK 0.75mm²/2G (H)VCTFK 1.25mm²/2G	PS E JET

Style	Available with Cords	Approvals
 SH015+SH006L	(H)VCTF 0.75mm²/3G (H)VCTF 1.25mm²/3G (H)VCTF 0.75mm²/2G (H)VCTF 1.25mm²/2G	PS E JET

Order Information

Product No.: KLS17-SH001/SH112-1.50M-B-XX

- **Part No.**
- **Series No.**
- **Cable Length:1.50M and Other Length**
- **Cable Color: B=Black GR=Gray**
- **XX:Cable type**

Power Line Processing Series

KLS17-SH (Korea Power cords)

P.S.: All our power leads are available in custom lengths, made-to-order cable terminations, custom stripping and in custom colors.


YP22K+YC12

Style	Standard	Available with Cords		Approvals
 YP22K	K60844-1 KSC8305	H05VV-F 0.75mm²/3G H05VV-F 1.0mm²/3G	16A 250V 16A 250V	

Style	Standard	Available with Cords		Approvals
 YC12	K60844-1 KSC8305	H05VV-F 0.75mm²/3G H05VV-F 1.0mm²/3G	10A 250V 10A 250V	

Style	Standard	Available with Cords		Approvals
 YP22K+YC12	K60844-1 KSC8305	H05VV-F 0.75mm²/3G H05VV-F 1.0mm²/3G	10A 250V	

Order Information

Product No.: KLS17-YP22K-1.50M-B-XX

- **Part No.**
- **Series No.**
- **Cable Length:1.50M and Other Length**
- **Cable Color: B=Black GR=Gray**
- **XX:Cable type**

Power Line Processing Series

KLS17-SM (USA Power cords)



Style	Standard	Available with Cords		Approvals
 SM001	UL-817 CSA:C22.2 NO.42	SVT 18AWG/3C SJT 18AWG/3C (Shielded & Unshielded) SJT 16AWG/3C SJT 14AWG/3C SPT-1 18AWG/3C SPT-2 18AWG/3C	10A 125V 10A 125V 13A 125V 15A 125V 10A 125V 10A 125V	UL CSA

Style	Standard	Available with Cords		Approvals
 SM018	UL-817 CSA:C22.2 NO.21 C22.2 NO.182.3 IEC320 C14	SVT 18AWG/3C SJT 18AWG/3C (Shielded & Unshielded)	10A 125V 10A 125V	UL CSA

Style	Standard	Available with Cords		Approvals
 SM006	UL-817 CSA:C22.2 NO.42 C22.2 NO182.3 IEC320 C13	SVT 18AWG/3C SJT 18AWG/3C (Shielded & Unshielded)	10A 125V 10A 125V	UL CSA

Style	Standard	Available with Cords		Approvals
 SM103	UL-817 CSA:C22.2 NO.42 C22.2 NO	SPT-1 18AWG/2C SPT-2 18AWG/2C NISPT-1 18AWG/2C NISPT-2 18AWG/2C	7A 125V 7A 125V 7A 125V 7A 125V	UL CSA

Power Line Processing Series

KLS17-SM (USA Power cords)

Style	Standard	Available with Cords		Approvals
 SM104	UL-817 CSA:C 22.2 NO.42 C22.2 NO.42	SPT-1 18AWG/2C SPT-2 18AWG/2C NISPT-1 18AWG/2C NISPT-2 18AWG/2C	7A 125V 7A 125V 7A 125V 7A 125V	UL CSA

Style	Standard	Available with Cords		Approvals
 YP18(Hospital Grade)	UL-817	SJT 18AWG/3C SJTW 18AWG/3C SJT 16AWG/3C SJTW 16AWG/3C SJT 14AWG/3C SJTW 14AWG/3C	10A/125V 10A/125V 13A/125V 13A/125V 15A/125V 15A/125V	UL CSA

Style	Standard	Available with Cords		Approvals
 SM035	UL-817	SVT 18AWG/3C SJT 18AWG/3C	10A/125V 10A/125V	UL CSA

Style	Standard	Available with Cords		Approvals
 SM006L	UL-817 CSA:C22.2 NO.21 C22.2 NO.182.3 IEC320 C13	SVT 18AWG/3C-(un)shielded SJT 18 AWG/3C-(un) shielded SJT 16 AWG/3C-(un) shielded SJT 14 AWG/3C	10A/125V 10A/125V 13A/125V 15A/125V	UL CSA

Style	Standard	Available with Cords		Approvals
 SM006L1	UL-817 CSA:C22.2 NO.21 C22.2 NO.182.3 IEC320 C13	SVT 18AWG/3C-(un)shielded SJT 18 AWG/3C-(un) shielded SJT 16 AWG/3C-(un) shielded SJT 14 AWG/3C	10A/125V 10A/125V 13A/125V 15A/125V	UL CSA

Power Line Processing Series

KLS17-SM (USA Power cords)

Style	Standard	Available with Cords		Approvals
 SM006L2	UL-817 CSA:C22.2 NO.21 C22.2 NO.182.3 IEC320 C13	SVT 18AWG/3C-(un) shielded SJT 18 AWG/3C-(un) shielded SJT 16 AWG/3C-(un) shielded SJT 14 AWG/3C	10A/125V 10A/125V 13A/125V 15A/125V	UL CSA

Style	Standard	Available with Cords		Approvals
 SM006L3	UL-817 CSA:C22.2 NO.21 C22.2 NO.182.3 IEC320 C13	SVT 18AWG/3C-(un) shielded SJT 18 AWG/3C-(un) shielded SJT 16 AWG/3C-(un) shielded SJT 14 AWG/3C	10A/125V 10A/125V 13A/125V 15A/125V	UL CSA

Style	Available with Cords	Approvals
 SM001+SM006	SVT 18AWG/3C SJT 18AWG/3C(Shielded & Unshielded)	UL

Style	Available with Cords	Approvals
 SM001+SM112	SVT 18AWG/3C	UL

Style	Available with Cords	Approvals
 SM001+SM006L	SVT 18AWG/3C SJT 18AWG/3C(Shielded & Unshielded)	UL

Power Line Processing Series

KLS17-SM (USA Power cords)

Style	Available with Cords	Approvals
 SM018+SM006	SVT 18AWG/3C SJT 18AWG/3C(Shielded & Unshielded)	UL

Style	Available with Cords	Approvals
 SM018+SM112	SVT 18AWG/3C	UL

Style	Available with Cords	Approvals
 SM045+SM103	SPT-1 18AWG/2C SPT-2 18AWG/2C NISPT-1 18AWG/2C(UL) NISPT-2 18AWG/2C(UL)	UL

Style	Available with Cords	Approvals
 SM045+SM104	SPT-1 18AWG/2C SPT-2 18AWG/2C NISPT-1 18AWG/2C(UL) NISPT-2 18AWG/2C(UL)	UL

Style	Available with Cords	Approvals
 Y-Cable	SVT 18AWG 3C SJT 18AWG/3C	UL

Power Line Processing Series

KLS17-SM (USA Power cords)

Style	Standard	Available with Cords		Approvals
 SM112	UL-817 CSA:C22.2 NO.42 C22.2 NO.182.3 IEC320 C5	SVT 18AWG/3C	7A 125V	UL CSA

Style	Standard	Available with Cords		Approvals
 SM318		SPT-2 18AWG/3C	2.4A 125V	UL CSA

Style	Standard	Available with Cords		Approvals
 SM045	UL-817 CSA:C22.2 NO.42 C22.2 NO. 42	SPT-1 18AWG/2C SPT-2 18AWG/2C SPT-2 16AWG/2C NISPT-1 18AWG/2C NISPT-2 18AWG/2C SVT 18AWG/2C SVT 17AWG/2C SVT 16AWG/2C SJT 18AWG/2C SJT 16AWG/2C SJT 14AWG/2C SJTW 18AWG/2C SJTW 16AWG/2C SJTW 14AWG/2C SJTOW 18AWG/2C SJTOW 16AWG/2C SJTOW 14AWG/2C	10A AC125V 10A AC125V 13A AC125V 10A AC125V 10A AC125V 10A AC125V 12A AC125V 13A AC125V 10A AC125V 13A AC125V 15A AC125V 10A AC125V 13A AC125V 15A AC125V 10A AC125V 13A AC125V 15A AC125V	UL CSA

P.S.: All our power leads are available in custom lengths, made-to-order cable terminations, custom stripping and in custom colors.

Order Information

Product No.: KLS17-SM001-1.50M-B-XX

Part No.
Series No.
Cable Length:1.50M and Other Length
Cable Color: B=Black GR=Gray
XX:Cable type

Power Line Processing Series

KLS17-YC (Italy Power cords)

P.S.: All our power leads are available in custom lengths, made-to-order cable terminations, custom stripping and in custom colors.


YP45+YC12L

Style	Standard	Available with Cords		Approvals
 YP45	CEI 23-16/VII	H05VV-F 0.75mm²/3G H05VV-F 1.0mm²/3G	10A 250V 10A 250V	

Style	Standard	Available with Cords		Approvals
 YC12	EN60320 IEC 320-1 SHEET C13	H05VV-F 0.75mm²/3G H05VV-F 1.0mm²/3G	10A 250V 10A 250V	

Style	Standard	Available with Cords		Approvals
 YC12L	EN60320 IEC 320-1 SHEET C13	H05VV-F 0.75mm²/3G H05VV-F 1.0mm²/3G	10A 250V 10A 250V	

Style	Standard	Available with Cords		Approvals
 YC14	EN60320 IEC 320-1 SHEET C5	H05VV-F 0.75mm²/3G H05VV-F 1.0mm²/3G	2.5A 250V 2.5A 250V	

Power Line Processing Series

KLS17-YC (Italy Power cords)

Style	Available with Cords	Approvals
 YP45+YC12	H05VV-F 0.75mm²/3G H05VV-F 1.0mm²/3G	

Style	Available with Cords	Approvals
 YP45+YC12L	H05VV-F 0.75mm²/3G H05VV-F 1.0mm²/3G	

Style	Available with Cords	Approvals
 YP45+YC14	H05VV-F 0.75mm²/3G H05VV-F 1.0mm²/3G	

Order Information

Product No.: KLS17-YP45 - 1.50M-B-XX

- **Part No.**
- **Series No.**
- **Cable Length:1.50M and Other Length**
- **Cable Color: B=Black GR=Gray**
- **XX:Cable type**

Power Line Processing Series

KLS17-YP (Britain Power cords)



Style	Standard	Available with Cords		Approvals
 YP61	BS-1363 SS 145A	H03VVH2-F 075mm²/2G H05VVH2-F 075mm²/2G H05VV-F 075mm²/2G H05VV-F 1.0mm²/2G H05VV-F 075mm²/3G H05VV-F 1.0mm²/3G H05VV-F 1.5mm²/3G	3A,5A.10A 3A,5A.10A 3A 5A.10A 3A,5A.10A 3A,5A.10A 3A,5A.10A 13A	

Style	Standard	Available with Cords		Approvals
 BS Assembly	BS-1363 SS 145A	H05VV-F 0.75mm²/3C H05VV-F 1.0mm²/3C H03VVH2-F 0.75mm²/2C	3A 5A 15A	

Style	Standard	Available with Cords		Approvals
 YC12	BS 4491 EN60 320 IEC 320-1 SHEET C13	H05VV-F 0.75mm²/3C H05VV-F 1.0mm²/3C	10A AC250V	

Style	Standard	Available with Cords		Approvals
 YC12L	BS 4491 EN60 320 IEC 320-1 SHEET C13	H05VV-F 0.75mm²/3C H05VV-F 1.0mm²/3C	10A 250V 10A 250V	

Power Line Processing Series

KLS17-YP (Britain Power cords)

Style	Standard	Available with Cords		Approvals
 YC14	BS 4491 EN60 320 IEC 320-1 SHEET C5	H05VV-F 0.75mm²/3C H05VV-F 1.0mm²/3C	2.5A 250V 2.5A 250V	

Style	Standard	Available with Cords		Approvals
 YC13	EN60320 IEC 320-1 SHEET C7	H03VVH2-F 0.75mm²/2C	2.5A AC250V	

Style	Available with Cords	Approvals
 YP61+YC12	H05VV-F 0.75mm²/3C H05VV-F 1.0mm²/3C	

Style	Available with Cords	Approvals
 YP61+YC12L	H05VV-F 0.75mm²/3C H05VV-F 1.0mm²/3C	

Style	Available with Cords	Approvals
 YP61+YC14	H05VV-F 0.75mm²/3C H05VV-F 1.0mm²/3C	

Power Line Processing Series

KLS17-YP (Britain Power cords)

Style	Available with Cords	Approvals
 YP61+YC13	H03VVH2-F 0.75mm²/2C	

Style	Available with Cords	Approvals
 BS Assembly+SH006	H05VV-F 0.75mm²/3C H05VV-F 1.0mm²/3C	

Style	Available with Cords	Approvals
 BS Assembly+SM112	H05VV-F 0.75mm²/3C H05VV-F 1.0mm²/3C	

Style	Available with Cords	Approvals
 BS Assembly+SH103	H03VVH2-F 0.75mm²/2C	

Order Information

Product No.: KLS17-YP61 - 1.50M-B-XX

- **Part No.**
- **Series No.**
- **Cable Length:1.50M and Other Length**
- **Cable Color: B=Black GR=Gray**
- **XX:Cable type**

Power Line Processing Series

KLS17-YP (Swiss Power cords)

P.S.: All our power leads are available in custom lengths, made-to-order cable terminations, custom stripping and in custom colors.



YP46+YC14

Style	Standard	Available with Cords		Approvals
 YP46	SEV 1011	H05VV-F 0.75mm²/3G H05VV-F 1.0mm²/3G	10A 250V 10A 250V	

Style	Standard	Available with Cords		Approvals
 YC12	EN60320 IEC 320-1 SHEET C13	H05VV-F 0.75mm²/3G H05VV-F 1.0mm²/3G	10A 250V 10A 250V	

Style	Standard	Available with Cords		Approvals
 YC12L	EN60320 IEC 320-1 SHEET C13	H05VV-F 0.75mm²/3G H05VV-F 1.0mm²/3G	10A 250V 10A 250V	

Style	Standard	Available with Cords		Approvals
 YC14	EN60320 IEC 320-1 SHEET C5	H05VV-F 0.75mm²/3G H05VV-F 1.0mm²/3G	2.5A 250V 2.5A 250V	

Power Line Processing Series

KLS17-YP (Swiss Power cords)

Style	Available with Cords	Approvals
 YP46+YC12	H05VV-F 0.75mm²/3G H05VV-F 1.0mm²/3G	

Style	Available with Cords	Approvals
 YP46+YC12L	H05VV-F 0.75mm²/3G H05VV-F 1.0mm²/3G	

Style	Available with Cords	Approvals
 YP46+YC14	H05VV-F 0.75mm²/3G H05VV-F 1.0mm²/3G	

Order Information

Product No.: KLS17-YP46 - 1.50M-B-XX

- **Part No.**
- **Series No.**
- **Cable Length:1.50M and Other Length**
- **Cable Color: B=Black GR=Gray**
- **XX:Cable type**

KLS

9-Fans, Motors ,Thermal Management-Вентиляторы, Электродвигатели и приводы,Радиаторы

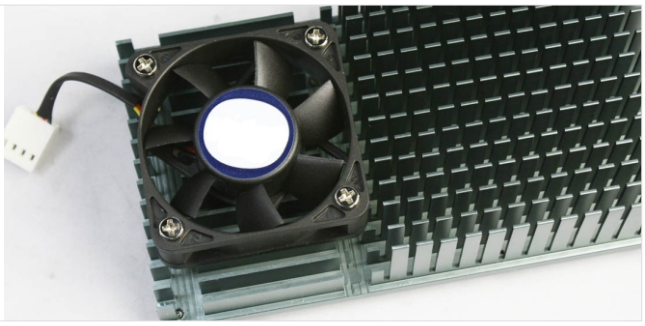

9-1 Fans
9-2 Motors
9-3 Radiator, Heat sink

More . . .

AC Fans

AC fans size 80*80*25mm Aluminum alloy housing PBT Blade,7 blades

Insulating aterial centigrade： 10MΩ at 500VDC between lead and frame
Inner press： 1 min at 1500VAC/50-60HZ ,current〈5mA
Working temperature： -20ºC ~ 80ºC
Working pressure： 85V ~ 125V for 110V and 190V ~ 250V for 220V
Normal temperature working time: Ball bearing hour's five,oil bearing hour's three.



KLS P/N	Freq	Voltage	Bearing Style	Current	Power Watts	Speed	Airflow	Pressure	Noise dBA
	Hz	VAC		AMP		RPM	CFM	mmH_2O	
8025-1-1HSL	50/60	110	S	0.14/0.12	15.4/13.2	2300/2700	17/21	3.0/4.3	29/33
8025-1-1HBL	50/60	110	B	0.14/0.12	15.4/13.2	2400/2800	18/22	3.2/4.5	30/34
8025-1-2HSL	50/60	220	S	0.08/0.07	17.6/15.4	2300/2700	17/21	3.0/4.3	29/33
8025-1-2HBL	50/60	220	B	0.08/0.07	17.6/15.4	2400/2800	18/22	3.2/4.5	30/34
8025-1-3HSL	50/60	380	S	0.05/0.04	19.0/15.2	2300/2700	17/21	3.0/4.3	29/33
8025-1-3HBL	50/60	380	B	0.05/0.04	19.0/15.2	2400/2800	18/22	3.2/4.5	30/34
8025-1-1HST	50/60	110	S	0.14/0.12	15.4/13.2	2300/2700	17/21	3.0/4.3	29/33
8025-1-1HBT	50/60	110	B	0.14/0.12	15.4/13.2	2400/2800	18/22	3.2/4.5	30/34
8025-1-2HST	50/60	220	S	0.08/0.07	17.6/15.4	2300/2700	17/21	3.0/4.3	29/33
8025-1-2HBT	50/60	220	B	0.08/0.07	17.6/15.4	2400/2800	18/22	3.2/4.5	30/34
8025-1-3HST	50/60	380	S	0.05/0.04	19.0/15.2	2300/2700	17/21	3.0/4.3	29/33
8025-1-3HBT	50/60	380	B	0.05/0.04	19.0/15.2	2400/2800	18/22	3.2/4.5	30/34

*S: Sleeve bearing B: Ball bearing

*L: 30CM wire cable T: Quick solder terminal

AC fans size 80*80*25mm Aluminum alloy housing PBT Blade,5 blades

Insulating aterial centigrade： 10MΩ at 500VDC between lead and frame
Inner press： 1 min at 1500VAC/50-60HZ ,current〈5mA
Working temperature： -20ºC ~ 80ºC
Working pressure： 85V ~ 125V for 110V and 190V ~ 250V for 220V
Normal temperature working time: Ball bearing hour's five,oil bearing hour's three.



KLS P/N	Freq	Voltage	Bearing Style	Current	Power Watts	Speed	Airflow	Pressure	Noise dBA
	Hz	VAC		AMP		RPM	CFM	mmH_2O	
8025-2-1HSL	50/60	110	S	0.14/0.12	15.4/13.2	2300/2700	17/21	3.0/4.3	29/33
8025-2-1HBL	50/60	110	B	0.14/0.12	15.4/13.2	2400/2800	18/22	3.2/4.5	30/34
8025-2-2HSL	50/60	220	S	0.08/0.07	17.6/15.4	2300/2700	17/21	3.0/4.3	29/33
8025-2-2HBL	50/60	220	B	0.08/0.07	17.6/15.4	2400/2800	18/22	3.2/4.5	30/34
8025-2-3HSL	50/60	380	S	0.05/0.04	19.0/15.2	2300/2700	17/21	3.0/4.3	29/33
8025-2-3HBL	50/60	380	B	0.05/0.04	19.0/15.2	2400/2800	18/22	3.2/4.5	30/34
8025-2-1HST	50/60	110	S	0.14/0.12	15.4/13.2	2300/2700	17/21	3.0/4.3	29/33
8025-2-1HBT	50/60	110	B	0.14/0.12	15.4/13.2	2400/2800	18/22	3.2/4.5	30/34
8025-2-2HST	50/60	220	S	0.08/0.07	17.6/15.4	2300/2700	17/21	3.0/4.3	29/33
8025-2-2HBT	50/60	220	B	0.08/0.07	17.6/15.4	2400/2800	18/22	3.2/4.5	30/34
8025-2-3HST	50/60	380	S	0.05/0.04	19.0/15.2	2300/2700	17/21	3.0/4.3	29/33
8025-2-3HBT	50/60	380	B	0.05/0.04	19.0/15.2	2400/2800	18/22	3.2/4.5	30/34

*S: Sleeve bearing B: Ball bearing

*L: 30CM wire cable T: Quick solder terminal

AC Fans

AC fans size 80X80X38mm Aluminum alloy housing PBT Blade 5 blades

Insulating aterial centigrade： 10MΩ at 500VDC between lead and frame

Inner press： 1 min at 1500VAC/50-60HZ ,current〈5mA

Working temperature： -20ºC ~ 80ºC

Working pressure： 85V ~ 125V for 110V and 190V ~ 250V for 220V

Normal temperature working time: Ball bearing hour's five,oil bearing hour's three.



KLS P/N	Freq	Voltage	Bearing Style	Current	Power Watts	Speed	Airflow	Pressure	Noise dBA
	Hz	VAC		AMP		RPM	CFM	mmH_2O	
8025-3-1HSL	50/60	110	S	0.15/0.13	16.5/14.3	2300/2700	32/35	3.2/4.5	31/35
8025-3-1HBL	50/60	110	B	0.15/0.13	16.5/14.3	2400/2800	33/36	3.4/4.9	32/36
8025-3-2HSL	50/60	220	S	0.07/0.06	15.4/13.2	2300/2700	32/35	3.2/4.5	31/35
8025-3-2HBL	50/60	220	B	0.07/0.06	15.4/13.2	2400/2800	33/36	3.4/4.9	32/36
8025-3-3HSL	50/60	380	S	0.04/0.03	15.2/11.4	2300/2700	32/35	3.2/4.5	31/35
8025-3-3HBL	50/60	380	B	0.04/0.03	15.2/11.4	2400/2800	33/36	3.4/4.9	32/36
8025-3-1HST	50/60	110	S	0.14/0.12	15.4/13.2	2300/2700	17/21	3.0/4.3	29/33
8025-3-1HBT	50/60	110	B	0.14/0.12	15.4/13.2	2400/2800	18/22	3.2/4.5	30/34
8025-3-2HST	50/60	220	S	0.08/0.07	17.6/15.4	2300/2700	17/21	3.0/4.3	29/33
8025-3-2HBT	50/60	220	B	0.08/0.07	17.6/15.4	2400/2800	18/22	3.2/4.5	30/34
8025-3-3HST	50/60	380	S	0.05/0.04	19.0/15.2	2300/2700	17/21	3.0/4.3	29/33
8025-3-3HBT	50/60	380	B	0.05/0.04	19.0/15.2	2400/2800	18/22	3.2/4.5	30/34

*S: Sleeve bearing B: Ball bearing

*L: 30CM wire cable T: Quick solder terminal

AC fans size 92X92X25mm Aluminum alloy housing PBT Blade 5 blades

Insulating aterial centigrade： 10MΩ at 500VDC between lead and frame

Inner press： 1 min at 1500VAC/50-60HZ ,current〈5mA

Working temperature： -20ºC ~ 80ºC

Working pressure： 85V ~ 125V for 110V and 190V ~ 250V for 220V

Normal temperature working time: Ball bearing hour's five,oil bearing hour's three.



KLS P/N	Freq	Voltage	Bearing Style	Current	Power Watts	Speed	Airflow	Pressure	Noise dBA
	Hz	VAC		AMP		RPM	CFM	mmH_2O	
9225-1-1HSL	50/60	110	S	0.14/0.12	15.4/13.2	2200/2600	25/31	2.3/3.3	36/40
9225-1-1HBL	50/60	110	B	0.14/0.12	15.4/13.2	2250/2650	27/32	2.4/3.4	37/41
9225-1-2HSL	50/60	220	S	0.08/0.07	17.6/15.4	2200/2600	25/31	2.3/3.3	36/40
9225-1-2HBL	50/60	220	B	0.08/0.07	17.6/15.4	2250/2650	27/32	2.4/3.4	37/41
9225-1-3HSL	50/60	380	S	0.05/0.04	19.0/15.2	2200/2600	25/31	2.3/3.3	36/40
9225-1-3HBL	50/60	380	B	0.05/0.04	19.0/15.2	2250/2650	27/32	2.4/3.4	37/41
9225-1-1HST	50/60	110	S	0.14/0.12	15.4/13.2	2200/2600	25/31	2.3/3.3	36/40
9225-1-1HBT	50/60	110	B	0.14/0.12	15.4/13.2	2250/2650	27/32	2.4/3.4	37/41
9225-1-2HST	50/60	220	S	0.08/0.07	17.6/15.4	2200/2600	25/31	2.3/3.3	36/40
9225-1-2HBT	50/60	220	B	0.08/0.07	17.6/15.4	2250/2650	27/32	2.4/3.4	37/41
9225-1-3HST	50/60	380	S	0.05/0.04	19.0/15.2	2200/2600	25/31	2.3/3.3	36/40
9225-1-3HBT	50/60	380	B	0.05/0.04	19.0/15.2	2250/2650	27/32	2.4/3.4	37/41

*S: Sleeve bearing B: Ball bearing

*L: 30CM wire cable T: Quick solder terminal

AC Fans

AC fans size 92X92X38mm Aluminum alloy housing PBT Blade 5 blades



Insulating aterial centigrade： 10MΩ at 500VDC between lead and frame
Inner press： 1 min at 1500VAC/50-60HZ ,current〈5mA
Working temperature： -20ºC ~ 80ºC
Working pressure： 85V ~ 125V for 110V and 190V ~ 250V for 220V
Normal temperature working time: Ball bearing hour's five,oil bearing hour's three.

KLS P/N	Freq	Voltage	Bearing Style	Current	Power Watts	Speed	Airflow	Pressure	Noise dBA
	Hz	VAC		AMP		RPM	CFM	mmH_2O	
9225-2-1HSL	50/60	110	S	0.15/0.13	16.5/14.3	2400/2800	44/54	3.6/5.3	36/40
9225-2-1HBL	50/60	110	B	0.15/0.13	16.5/14.3	2500/2900	45/55	3.7/5.5	37/41
9225-2-2HSL	50/60	220	S	0.07/0.06	15.4/13.2	2400/2800	44/54	3.6/5.3	36/40
9225-2-2HBL	50/60	220	B	0.07/0.06	15.4/13.2	2500/2900	45/55	3.7/5.5	37/41
9225-2-3HSL	50/60	380	S	0.04/0.03	15.2/11.4	2400/2800	44/54	3.6/5.3	36/40
9225-2-3HBL	50/60	380	B	0.04/0.03	15.2/11.4	2500/2900	45/55	3.7/5.5	37/41
9225-2-1HST	50/60	110	S	0.15/0.13	16.5/14.3	2400/2800	44/54	3.6/5.3	36/40
9225-2-1HBT	50/60	110	B	0.15/0.13	16.5/14.3	2500/2900	45/55	3.7/5.5	37/41
9225-2-2HST	50/60	220	S	0.07/0.06	15.4/13.2	2400/2800	44/54	3.6/5.3	36/40
9225-2-2HBT	50/60	220	B	0.07/0.06	15.4/13.2	2500/2900	45/55	3.7/5.5	37/41
9225-2-3HST	50/60	380	S	0.04/0.03	15.2/11.4	2400/2800	44/54	3.6/5.3	36/40
9225-2-3HBT	50/60	380	B	0.04/0.03	15.2/11.4	2500/2900	45/55	3.7/5.5	37/41

*S: Sleeve bearing B: Ball bearing
*L: 30CM wire cable T: Quick solder terminal

AC fans size 110X110X25mm Aluminum alloy housing PBT Blade 5 blades



Insulating aterial centigrade： 10MΩ at 500VDC between lead and frame
Inner press： 1 min at 1500VAC/50-60HZ ,current〈5mA
Working temperature： -20ºC ~ 80ºC
Working pressure： 85V ~ 125V for 110V and 190V ~ 250V for 220V
Normal temperature working time: Ball bearing hour's five,oil bearing hour's three.

KLS P/N	Freq	Voltage	Bearing Style	Current	Power Watts	Speed	Airflow	Pressure	Noise dBA
	Hz	VAC		AMP		RPM	CFM	mmH_2O	
11025-1HSL	50/60	110	S	0.14/0.12	15.4/13.2	2150/2550	47/57	2.6/2.9	32/36
11025-1HBL	50/60	110	B	0.14/0.12	15.4/13.2	2100/2600	48/58	2.7/3.0	34/38
11025-2HSL	50/60	220	S	0.08/0.07	17.6/15.4	2150/2550	47/57	2.6/2.9	32/36
11025-2HBL	50/60	220	B	0.08/0.07	17.6/15.4	2100/2600	48/58	2.7/3.0	34/38
11025-3HSL	50/60	380	S	0.05/0.04	19.0/15.2	2150/2550	47/57	2.6/2.9	32/36
11025-3HBL	50/60	380	B	0.05/0.04	19.0/15.2	2100/2600	48/58	2.7/3.0	34/38
11025-1HST	50/60	110	S	0.14/0.12	15.4/13.2	2150/2550	47/57	2.6/2.9	32/36
11025-1HBT	50/60	110	B	0.14/0.12	15.4/13.2	2100/2600	48/58	2.7/3.0	34/38
11025-2HST	50/60	220	S	0.08/0.07	17.6/15.4	2150/2550	47/57	2.6/2.9	32/36
11025-2HBT	50/60	220	B	0.08/0.07	17.6/15.4	2100/2600	48/58	2.7/3.0	34/38
11025-3HST	50/60	380	S	0.05/0.04	19.0/15.2	2150/2550	47/57	2.6/2.9	32/36
11025-3HBT	50/60	380	B	0.05/0.04	19.0/15.2	2100/2600	48/58	2.7/3.0	34/38

*S: Sleeve bearing B: Ball bearing
*L: 30CM wire cable T: Quick solder terminal

AC Fans

AC fans size 120X120X25mm Aluminum alloy housing PBT Blade 5 blades



Insulating aterial centigrade： 10MΩ at 500VDC between lead and frame

Inner press： 1 min at 1500VAC/50-60HZ ,current〈5mA

Working temperature： -20ºC ~ 80ºC

Working pressure： 85V ~ 125V for 110V and 190V ~ 250V for 220V

Normal temperature working time: Ball bearing hour's five,oil bearing hour's three.

KLS P/N	Freq	Voltage	Bearing Style	Current	Power Watts	Speed	Airflow	Pressure	Noise dBA
	Hz	VAC		AMP		RPM	CFM	mmH_2O	
12025-1-1HSL	50/60	110	S	0.14/0.12	15.4/13.2	2000/2400	50/60	3.0/3.3	33/37
12025-1-1HBL	50/60	110	B	0.14/0.12	15.4/13.2	2050/2450	51/61	3.1/3.4	34/38
12025-1-2HSL	50/60	220	S	0.08/0.07	17.6/15.4	2000/2400	50/60	3.0/3.3	33/37
12025-1-2HBL	50/60	220	B	0.08/0.07	17.6/15.4	2050/2450	51/61	3.1/3.4	34/38
12025-1-3HSL	50/60	380	S	0.05/0.04	19.0/15.2	2000/2400	50/60	3.0/3.3	33/37
12025-1-3HBL	50/60	380	B	0.05/0.04	19.0/15.2	2050/2450	51/61	3.1/3.4	34/38
12025-1-1HST	50/60	110	S	0.14/0.12	15.4/13.2	2000/2400	50/60	3.0/3.3	33/37
12025-1-1HBT	50/60	110	B	0.14/0.12	15.4/13.2	2050/2450	51/61	3.1/3.4	34/38
12025-1-2HST	50/60	220	S	0.08/0.07	17.6/15.4	2000/2400	50/60	3.0/3.3	33/37
12025-1-2HBT	50/60	220	B	0.08/0.07	17.6/15.4	2050/2450	51/61	3.1/3.4	34/38
12025-1-3HST	50/60	380	S	0.05/0.04	19.0/15.2	2000/2400	50/60	3.0/3.3	33/37
12025-1-3HBT	50/60	380	B	0.05/0.04	19.0/15.2	2050/2450	51/61	3.1/3.4	34/38

*S: Sleeve bearing B: Ball bearing

*L: 30CM wire cable T: Quick solder terminal

AC fans size 120X120X25mm Aluminum alloy housing PBT Blade 7 blades



Insulating aterial centigrade： 10MΩ at 500VDC between lead and frame

Inner press： 1 min at 1500VAC/50-60HZ ,current〈5mA

Working temperature： -20ºC ~ 80ºC

Working pressure： 85V ~ 125V for 110V and 190V ~ 250V for 220V

Normal temperature working time: Ball bearing hour's five,oil bearing hour's three.

KLS P/N	Freq	Voltage	Bearing Style	Current	Power Watts	Speed	Airflow	Pressure	Noise dBA
	Hz	VAC		AMP		RPM	CFM	mmH_2O	
12025-2-1HSL	50/60	110	S	0.14/0.12	15.4/13.2	2000/2400	50/60	3.0/3.3	33/37
12025-2-1HBL	50/60	110	B	0.14/0.12	15.4/13.2	2050/2450	51/61	3.1/3.4	34/38
12025-2-2HSL	50/60	220	S	0.08/0.07	17.6/15.4	2000/2400	50/60	3.0/3.3	33/37
12025-2-2HBL	50/60	220	B	0.08/0.07	17.6/15.4	2050/2450	51/61	3.1/3.4	34/38
12025-2-3HSL	50/60	380	S	0.05/0.04	19.0/15.2	2000/2400	50/60	3.0/3.3	33/37
12025-2-3HBL	50/60	380	B	0.05/0.04	19.0/15.2	2050/2450	51/61	3.1/3.4	34/38
12025-2-1HST	50/60	110	S	0.14/0.12	15.4/13.2	2000/2400	50/60	3.0/3.3	33/37
12025-2-1HBT	50/60	110	B	0.14/0.12	15.4/13.2	2050/2450	51/61	3.1/3.4	34/38
12025-2-2HST	50/60	220	S	0.08/0.07	17.6/15.4	2000/2400	50/60	3.0/3.3	33/37
12025-2-2HBT	50/60	220	B	0.08/0.07	17.6/15.4	2050/2450	51/61	3.1/3.4	34/38
12025-2-3HST	50/60	380	S	0.05/0.04	19.0/15.2	2000/2400	50/60	3.0/3.3	33/37
12025-2-3HBT	50/60	380	B	0.05/0.04	19.0/15.2	2050/2450	51/61	3.1/3.4	34/38

*S: Sleeve bearing B: Ball bearing

*L: 30CM wire cable T: Quick solder terminal

AC Fans

AC fans size 120X120X25mm Aluminum alloy housing PBT Blade 7 blades



Insulating aterial centigrade：	10MΩ at 500VDC between lead and frame
Inner press：	1 min at 1500VAC/50-60HZ ,current〈5mA
Working temperature：	-20ºC ~ 80ºC
Working pressure：	85V ~ 125V for 110V and 190V ~ 250V for 220V
Normal temperature working time:	Ball bearing hour's five,oil bearing hour's three.

KLS P/N	Freq	Voltage	Bearing Style	Current	Power Watts	Speed	Airflow	Pressure	Noise dBA
	Hz	VAC		AMP		RPM	CFM	mmH_2O	
12025-2-1HSL	50/60	110	S	0.24/0.21	26.4/23.1	2600/3000	75/90	6.3/7.3	44/46
12025-2-1HBL	50/60	110	B	0.24/0.21	26.4/23.1	2600/3000	77/92	6.6/7.5	45/47
12025-2-2HSL	50/60	220	S	0.14/0.10	30.8/22.0	2600/3000	75/90	6.3/7.3	44/46
12025-2-2HBL	50/60	220	B	0.14/0.10	30.8/22.0	2600/3000	77/92	6.6/7.5	45/47
12025-2-3HSL	50/60	380	S	0.08/0.07	30.4/26.6	2600/3000	75/90	6.3/7.3	44/46
12025-2-3HBL	50/60	380	B	0.08/0.07	30.4/26.6	2600/3000	77/92	6.6/7.5	45/47
12025-2-1LSL	50/60	110	S	0.15/0.14	16.5/15.4	1800/1900	46/53	3.6/4.5	35/38
12025-2-1LBL	50/60	110	B	0.15/0.14	16.5/15.4	1850/2000	47/54	3.6/4.5	37/40
12025-2-2LSL	50/60	220	S	0.08/0.07	17.6/15.4	1800/1900	46/53	3.6/4.5	35/38
12025-2-2LBL	50/60	220	B	0.08/0.07	17.6/15.4	1850/2000	47/54	3.6/4.5	37/40
12025-2-3LSL	50/60	380	S	0.05/0.04	19.0/15.2	1800/1900	46/53	3.6/4.5	35/38
12025-2-3LBL	50/60	380	B	0.05/0.04	19.0/15.2	1850/2000	47/54	3.6/4.5	37/40
12025-2-1HST	50/60	110	S	0.24/0.21	26.4/23.1	2600/3000	75/90	6.3/7.3	44/46
12025-2-1HBT	50/60	110	B	0.24/0.21	26.4/23.1	2600/3000	77/92	6.6/7.5	45/47
12025-2-2HST	50/60	220	S	0.14/0.10	30.8/22.0	2600/3000	75/90	6.3/7.3	44/46
12025-2-2HBT	50/60	220	B	0.14/0.10	30.8/22.0	2600/3000	77/92	6.6/7.5	45/47
12025-2-3HST	50/60	380	S	0.08/0.07	30.4/26.6	2600/3000	75/90	6.3/7.3	44/46
12025-2-3HBT	50/60	380	B	0.08/0.07	30.4/26.6	2600/3000	77/92	6.6/7.5	45/47
12025-2-1LST	50/60	110	S	0.15/0.14	16.5/15.4	1800/1900	46/53	3.6/4.5	35/38
12025-2-1LBT	50/60	110	B	0.15/0.14	16.5/15.4	1850/2000	47/54	3.6/4.5	37/40
12025-2-2LST	50/60	220	S	0.08/0.07	17.6/15.4	1800/1900	46/53	3.6/4.5	35/38
12025-2-2LBT	50/60	220	B	0.08/0.07	17.6/15.4	1850/2000	47/54	3.6/4.5	37/40
12025-2-3LST	50/60	380	S	0.05/0.04	19.0/15.2	1800/1900	46/53	3.6/4.5	35/38
12025-2-3LBT	50/60	380	B	0.05/0.04	19.0/15.2	1850/2000	47/54	3.6/4.5	37/40

*S: Sleeve bearing B: Ball bearing

*L: 30CM wire cable T: Quick solder terminal

AC Fans

AC fans size 120X120X38mm Aluminum alloy housing PBT Blade 5 blades

Insulating aterial centigrade： 10MΩ at 500VDC between lead and frame

Inner press： 1 min at 1500VAC/50-60HZ ,current〈5mA

Working temperature： -20ºC ~ 80ºC

Working pressure： 85V ~ 125V for 110V and 190V ~ 250V for 220V

Normal temperature working time: Ball bearing hour's five,oil bearing hour's three.



KLS P/N	Freq	Voltage	Bearing Style	Current	Power Watts	Speed	Airflow	Pressure	Noise dBA
	Hz	VAC		AMP		RPM	CFM	mmH_2O	
12025-3-1HSL	50/60	110	S	0.24/0.21	26.4/23.1	2600/3000	75/90	6.3/7.3	44/46
12025-3-1HBL	50/60	110	B	0.24/0.21	26.4/23.1	2600/3000	77/92	6.6/7.5	45/47
12025-3-2HSL	50/60	220	S	0.14/0.10	30.8/22.0	2600/3000	75/90	6.3/7.3	44/46
12025-3-2HBL	50/60	220	B	0.14/0.10	30.8/22.0	2600/3000	77/92	6.6/7.5	45/47
12025-3-3HSL	50/60	380	S	0.08/0.07	30.4/26.6	2600/3000	75/90	6.3/7.3	44/46
12025-3-3HBL	50/60	380	B	0.08/0.07	30.4/26.6	2600/3000	77/92	6.6/7.5	45/47
12025-3-1LSL	50/60	110	S	0.15/0.14	16.5/15.4	1800/1900	46/53	3.6/4.5	35/38
12025-3-1LBL	50/60	110	B	0.15/0.14	16.5/15.4	1850/2000	47/54	3.6/4.5	37/40
12025-3-2LSL	50/60	220	S	0.08/0.07	17.6/15.4	1800/1900	46/53	3.6/4.5	35/38
12025-3-2LBL	50/60	220	B	0.08/0.07	17.6/15.4	1850/2000	47/54	3.6/4.5	37/40
12025-3-3LSL	50/60	380	S	0.05/0.04	19.0/15.2	1800/1900	46/53	3.6/4.5	35/38
12025-3-3LBL	50/60	380	B	0.05/0.04	19.0/15.2	1850/2000	47/54	3.6/4.5	37/40
12025-3-1HST	50/60	110	S	0.24/0.21	26.4/23.1	2600/3000	75/90	6.3/7.3	44/46
12025-3-1HBT	50/60	110	B	0.24/0.21	26.4/23.1	2600/3000	77/92	6.6/7.5	45/47
12025-3-2HST	50/60	220	S	0.14/0.10	30.8/22.0	2600/3000	75/90	6.3/7.3	44/46
12025-3-2HBT	50/60	220	B	0.14/0.10	30.8/22.0	2600/3000	77/92	6.6/7.5	45/47
12025-3-3HST	50/60	380	S	0.08/0.07	30.4/26.6	2600/3000	75/90	6.3/7.3	44/46
12025-3-3HBT	50/60	380	B	0.08/0.07	30.4/26.6	2600/3000	77/92	6.6/7.5	45/47
12025-3-1LST	50/60	110	S	0.15/0.14	16.5/15.4	1800/1900	46/53	3.6/4.5	35/38
12025-3-1LBT	50/60	110	B	0.15/0.14	16.5/15.4	1850/2000	47/54	3.6/4.5	37/40
12025-3-2LST	50/60	220	S	0.08/0.07	17.6/15.4	1800/1900	46/53	3.6/4.5	35/38
12025-3-2LBT	50/60	220	B	0.08/0.07	17.6/15.4	1850/2000	47/54	3.6/4.5	37/40
12025-3-3LST	50/60	380	S	0.05/0.04	19.0/15.2	1800/1900	46/53	3.6/4.5	35/38
12025-3-3LBT	50/60	380	B	0.05/0.04	19.0/15.2	1850/2000	47/54	3.6/4.5	37/40

*S: Sleeve bearing B: Ball bearing

*L: 30CM wire cable T: Quick solder terminal

AC Fans

AC fans size 120X120X38mm Aluminum alloy housing PBT Blade 7 blades



Insulating aterial centigrade：	10MΩ at 500VDC between lead and frame
Inner press：	1 min at 1500VAC/50-60HZ ,current〈5mA
Working temperature：	-20ºC ~ 80ºC
Working pressure：	85V ~ 125V for 110V and 190V ~ 250V for 220V
Normal temperature working time:	Ball bearing hour's five,oil bearing hour's three.

KLS P/N	Freq	Voltage	Bearing Style	Current	Power Watts	Speed	Airflow	Pressure	Noise dBA
	Hz	VAC		AMP		RPM	CFM	mmH_2O	
12025-4-1HSL	50/60	110	S	0.24/0.21	26.4/23.1	2600/3000	75/90	6.3/7.3	44/46
12025-4-1HBL	50/60	110	B	0.24/0.21	26.4/23.1	2600/3000	77/92	6.6/7.5	45/47
12025-4-2HSL	50/60	220	S	0.14/0.10	30.8/22.0	2600/3000	75/90	6.3/7.3	44/46
12025-4-2HBL	50/60	220	B	0.14/0.10	30.8/22.0	2600/3000	77/92	6.6/7.5	45/47
12025-4-3HSL	50/60	380	S	0.08/0.07	30.4/26.6	2600/3000	75/90	6.3/7.3	44/46
12025-4-3HBL	50/60	380	B	0.08/0.07	30.4/26.6	2600/3000	77/92	6.6/7.5	45/47
12025-4-1LSL	50/60	110	S	0.15/0.14	16.5/15.4	1800/1900	46/53	3.6/4.5	35/38
12025-4-1LBL	50/60	110	B	0.15/0.14	16.5/15.4	1850/2000	47/54	3.6/4.5	37/40
12025-4-2LSL	50/60	220	S	0.08/0.07	17.6/15.4	1800/1900	46/53	3.6/4.5	35/38
12025-4-2LBL	50/60	220	B	0.08/0.07	17.6/15.4	1850/2000	47/54	3.6/4.5	37/40
12025-4-3LSL	50/60	380	S	0.05/0.04	19.0/15.2	1800/1900	46/53	3.6/4.5	35/38
12025-4-3LBL	50/60	380	B	0.05/0.04	19.0/15.2	1850/2000	47/54	3.6/4.5	37/40
12025-4-1HST	50/60	110	S	0.24/0.21	26.4/23.1	2600/3000	75/90	6.3/7.3	44/46
12025-4-1HBT	50/60	110	B	0.24/0.21	26.4/23.1	2600/3000	77/92	6.6/7.5	45/47
12025-4-2HST	50/60	220	S	0.14/0.10	30.8/22.0	2600/3000	75/90	6.3/7.3	44/46
12025-4-2HBT	50/60	220	B	0.14/0.10	30.8/22.0	2600/3000	77/92	6.6/7.5	45/47
12025-4-3HST	50/60	380	S	0.08/0.07	30.4/26.6	2600/3000	75/90	6.3/7.3	44/46
12025-4-3HBT	50/60	380	B	0.08/0.07	30.4/26.6	2600/3000	77/92	6.6/7.5	45/47
12025-4-1LST	50/60	110	S	0.15/0.14	16.5/15.4	1800/1900	46/53	3.6/4.5	35/38
12025-4-1LBT	50/60	110	B	0.15/0.14	16.5/15.4	1850/2000	47/54	3.6/4.5	37/40
12025-4-2LST	50/60	220	S	0.08/0.07	17.6/15.4	1800/1900	46/53	3.6/4.5	35/38
12025-4-2LBT	50/60	220	B	0.08/0.07	17.6/15.4	1850/2000	47/54	3.6/4.5	37/40
12025-4-3LST	50/60	380	S	0.05/0.04	19.0/15.2	1800/1900	46/53	3.6/4.5	35/38
12025-4-3LBT	50/60	380	B	0.05/0.04	19.0/15.2	1850/2000	47/54	3.6/4.5	37/40

*S: Sleeve bearing B: Ball bearing

*L: 30CM wire cable T: Quick solder terminal

KLS electronic
www.cnkls.com

AC Fans

AC fans size 120X120X38mm Aluminium Backing+Plastic Front housing PBT Blade 5 blades

Insulating aterial centigrade：	10MΩ at 500VDC between lead and frame
Inner press：	1 min at 1500VAC/50-60HZ ,current〈5mA
Working temperature：	-20ºC ~ 80ºC
Working pressure：	85V ~ 125V for 110V and 190V ~ 250V for 220V
Normal temperature working time:	Ball bearing hour's five,oil bearing hour's three.



KLS P/N	Freq	Voltage	Bearing Style	Current	Power Watts	Speed	Airflow	Pressure	Noise dBA
	Hz	VAC		AMP		RPM	CFM	mmH_2O	
12025-5-1HSL	50/60	110	S	0.24/0.21	26.4/23.1	2600/3000	75/90	6.3/7.3	44/46
12025-5-1HBL	50/60	110	B	0.24/0.21	26.4/23.1	2600/3000	77/92	6.6/7.5	45/47
12025-5-2HSL	50/60	220	S	0.14/0.10	30.8/22.0	2600/3000	75/90	6.3/7.3	44/46
12025-5-2HBL	50/60	220	B	0.14/0.10	30.8/22.0	2600/3000	77/92	6.6/7.5	45/47
12025-5-3HSL	50/60	380	S	0.08/0.07	30.4/26.6	2600/3000	75/90	6.3/7.3	44/46
12025-5-3HBL	50/60	380	B	0.08/0.07	30.4/26.6	2600/3000	77/92	6.6/7.5	45/47
12025-5-1LSL	50/60	110	S	0.15/0.14	16.5/15.4	1800/1900	46/53	3.6/4.5	35/38
12025-5-1LBL	50/60	110	B	0.15/0.14	16.5/15.4	1850/2000	47/54	3.6/4.5	37/40
12025-5-2LSL	50/60	220	S	0.08/0.07	17.6/15.4	1800/1900	46/53	3.6/4.5	35/38
12025-5-2LBL	50/60	220	B	0.08/0.07	17.6/15.4	1850/2000	47/54	3.6/4.5	37/40
12025-5-3LSL	50/60	380	S	0.05/0.04	19.0/15.2	1800/1900	46/53	3.6/4.5	35/38
12025-5-3LBL	50/60	380	B	0.05/0.04	19.0/15.2	1850/2000	47/54	3.6/4.5	37/40
12025-5-1HST	50/60	110	S	0.24/0.21	26.4/23.1	2600/3000	75/90	6.3/7.3	44/46
12025-5-1HBT	50/60	110	B	0.24/0.21	26.4/23.1	2600/3000	77/92	6.6/7.5	45/47
12025-5-2HST	50/60	220	S	0.14/0.10	30.8/22.0	2600/3000	75/90	6.3/7.3	44/46
12025-5-2HBT	50/60	220	B	0.14/0.10	30.8/22.0	2600/3000	77/92	6.6/7.5	45/47
12025-5-3HST	50/60	380	S	0.08/0.07	30.4/26.6	2600/3000	75/90	6.3/7.3	44/46
12025-5-3HBT	50/60	380	B	0.08/0.07	30.4/26.6	2600/3000	77/92	6.6/7.5	45/47
12025-5-1LST	50/60	110	S	0.15/0.14	16.5/15.4	1800/1900	46/53	3.6/4.5	35/38
12025-5-1LBT	50/60	110	B	0.15/0.14	16.5/15.4	1850/2000	47/54	3.6/4.5	37/40
12025-5-2LST	50/60	220	S	0.08/0.07	17.6/15.4	1800/1900	46/53	3.6/4.5	35/38
12025-5-2LBT	50/60	220	B	0.08/0.07	17.6/15.4	1850/2000	47/54	3.6/4.5	37/40
12025-5-3LST	50/60	380	S	0.05/0.04	19.0/15.2	1800/1900	46/53	3.6/4.5	35/38
12025-5-3LBT	50/60	380	B	0.05/0.04	19.0/15.2	1850/2000	47/54	3.6/4.5	37/40

*S: Sleeve bearing B: Ball bearing

*L: 30CM wire cable T: Quick solder terminal

AC Fans

AC fans size 120X120X38mm Aluminum alloy housing PBT Blade 5 blades



Insulating aterial centigrade： 10MΩ at 500VDC between lead and frame

Inner press： 1 min at 1500VAC/50-60HZ ,current〈5mA

Working temperature： -20ºC ~ 80ºC

Working pressure： 85V ~ 125V for 110V and 190V ~ 250V for 220V

Normal temperature working time: Ball bearing hour's five,oil bearing hour's three.

KLS P/N	Freq	Voltage	Bearing Style	Current	Power Watts	Speed	Airflow	Pressure	Noise dBA
	Hz	VAC		AMP		RPM	CFM	mmH_2O	
12025-6-1HSL	50/60	110	S	0.24/0.21	26.4/23.1	2600/3000	75/90	6.3/7.3	44/46
12025-6-1HBL	50/60	110	B	0.24/0.21	26.4/23.1	2600/3000	77/92	6.6/7.5	45/47
12025-6-2HSL	50/60	220	S	0.14/0.10	30.8/22.0	2600/3000	75/90	6.3/7.3	44/46
12025-6-2HBL	50/60	220	B	0.14/0.10	30.8/22.0	2600/3000	77/92	6.6/7.5	45/47
12025-6-3HSL	50/60	380	S	0.08/0.07	30.4/26.6	2600/3000	75/90	6.3/7.3	44/46
12025-6-3HBL	50/60	380	B	0.08/0.07	30.4/26.6	2600/3000	77/92	6.6/7.5	45/47
12025-6-1LSL	50/60	110	S	0.15/0.14	16.5/15.4	1800/1900	46/53	3.6/4.5	35/38
12025-6-1LBL	50/60	110	B	0.15/0.14	16.5/15.4	1850/2000	47/54	3.6/4.5	37/40
12025-6-2LSL	50/60	220	S	0.08/0.07	17.6/15.4	1800/1900	46/53	3.6/4.5	35/38
12025-6-2LBL	50/60	220	B	0.08/0.07	17.6/15.4	1850/2000	47/54	3.6/4.5	37/40
12025-6-3LSL	50/60	380	S	0.05/0.04	19.0/15.2	1800/1900	46/53	3.6/4.5	35/38
12025-6-3LBL	50/60	380	B	0.05/0.04	19.0/15.2	1850/2000	47/54	3.6/4.5	37/40
12025-6-1HST	50/60	110	S	0.24/0.21	26.4/23.1	2600/3000	75/90	6.3/7.3	44/46
12025-6-1HBT	50/60	110	B	0.24/0.21	26.4/23.1	2600/3000	77/92	6.6/7.5	45/47
12025-6-2HST	50/60	220	S	0.14/0.10	30.8/22.0	2600/3000	75/90	6.3/7.3	44/46
12025-6-2HBT	50/60	220	B	0.14/0.10	30.8/22.0	2600/3000	77/92	6.6/7.5	45/47
12025-6-3HST	50/60	380	S	0.08/0.07	30.4/26.6	2600/3000	75/90	6.3/7.3	44/46
12025-6-3HBT	50/60	380	B	0.08/0.07	30.4/26.6	2600/3000	77/92	6.6/7.5	45/47
12025-6-1LST	50/60	110	S	0.15/0.14	16.5/15.4	1800/1900	46/53	3.6/4.5	35/38
12025-6-1LBT	50/60	110	B	0.15/0.14	16.5/15.4	1850/2000	47/54	3.6/4.5	37/40
12025-6-2LST	50/60	220	S	0.08/0.07	17.6/15.4	1800/1900	46/53	3.6/4.5	35/38
12025-6-2LBT	50/60	220	B	0.08/0.07	17.6/15.4	1850/2000	47/54	3.6/4.5	37/40
12025-6-3LST	50/60	380	S	0.05/0.04	19.0/15.2	1800/1900	46/53	3.6/4.5	35/38
12025-6-3LBT	50/60	380	B	0.05/0.04	19.0/15.2	1850/2000	47/54	3.6/4.5	37/40

*S: Sleeve bearing B: Ball bearing

*L: 30CM wire cable T: Quick solder terminal

AC Fans

AC fans size 135X135X32mm Aluminum alloy housing PBT Blade 5 blades



Insulating aterial centigrade： 10MΩ at 500VDC between lead and frame

Inner press： 1 min at 1500VAC/50-60HZ ,current〈5mA

Working temperature： -20ºC ~ 80ºC

Working pressure： 85V ~ 125V for 110V and 190V ~ 250V for 220V

Normal temperature working time: Ball bearing hour's five,oil bearing hour's three.

KLS P/N	Freq	Voltage	Bearing Style	Current	Power Watts	Speed	Airflow	Pressure	Noise dBA
	Hz	VAC		AMP		RPM	CFM	mmH_2O	
13532-1-1HSL	50/60	110	S	0.34/0.30	25/20	2250/2400	95/110	7.2/8.1	44/50
13532-1-1HBL	50/60	110	B	0.34/0.30	25/20	2250/2400	95/110	7.2/8.1	45/51
13532-1-2HSL	50/60	220	S	0.18/0.14	25/20	2250/2400	95/110	7.2/8.1	44/50
13532-1-2HBL	50/60	220	B	0.18/0.14	25/20	2250/2400	95/110	7.2/8.1	45/51
13532-1-1HST	50/60	110	S	0.34/0.30	25/20	2250/2400	95/110	7.2/8.1	44/50
13532-1-1HBT	50/60	110	B	0.34/0.30	25/20	2250/2400	95/110	7.2/8.1	45/51
13532-1-2HST	50/60	220	S	0.18/0.14	25/20	2250/2400	95/110	7.2/8.1	44/50
13532-1-2HBT	50/60	220	B	0.18/0.14	25/20	2250/2400	95/110	7.2/8.1	45/51

*S: Sleeve bearing B: Ball bearing

*L: 30CM wire cable T: Quick solder terminal

AC fans size 135X135X38mm Aluminum alloy housing PBT Blade 5 blades



Insulating aterial centigrade： 10MΩ at 500VDC between lead and frame

Inner press： 1 min at 1500VAC/50-60HZ ,current〈5mA

Working temperature： -20ºC ~ 80ºC

Working pressure： 85V ~ 125V for 110V and 190V ~ 250V for 220V

Normal temperature working time: Ball bearing hour's five,oil bearing hour's three.

KLS P/N	Freq	Voltage	Bearing Style	Current	Power Watts	Speed	Airflow	Pressure	Noise dBA
	Hz	VAC		AMP		RPM	CFM	mmH_2O	
13532-2-1HSL	50/60	110	S	0.34/0.30	25/20	2250/2400	95/110	7.2/8.1	44/50
13532-2-1HBL	50/60	110	B	0.34/0.30	25/20	2250/2400	95/110	7.2/8.1	45/51
13532-2-2HSL	50/60	220	S	0.18/0.14	25/20	2250/2400	95/110	7.2/8.1	44/50
13532-2-2HBL	50/60	220	B	0.18/0.14	25/20	2250/2400	95/110	7.2/8.1	45/51
13532-2-1HST	50/60	110	S	0.34/0.30	25/20	2250/2400	95/110	7.2/8.1	44/50
13532-2-1HBT	50/60	110	B	0.34/0.30	25/20	2250/2400	95/110	7.2/8.1	45/51
13532-2-2HST	50/60	220	S	0.18/0.14	25/20	2250/2400	95/110	7.2/8.1	44/50
13532-2-2HBT	50/60	220	B	0.18/0.14	25/20	2250/2400	95/110	7.2/8.1	45/51

*S: Sleeve bearing B: Ball bearing

*L: 30CM wire cable T: Quick solder terminal

AC Fans

AC fans size 172X150X38mm Aluminum alloy housing PBT Blade 5 blades



Insulating aterial centigrade： 10MΩ at 500VDC between lead and frame

Inner press： 1 min at 1500VAC/50-60HZ ,current〈5mA

Working temperature： -20ºC ~ 80ºC

Working pressure： 85V ~ 125V for 110V and 190V ~ 250V for 220V

Normal temperature working time: Ball bearing hour's five,oil bearing hour's three.

KLS P/N	Freq	Voltage	Bearing Style	Current	Power Watts	Speed	Airflow	Pressure	Noise dBA
	Hz	VAC		AMP		RPM	CFM	mmH_2O	
15038-1-1HSL	50/60	110	S	0.40/0.35	43/36	2300/2500	150/170	11/15	48/51
15038-1-1HBL	50/60	110	B	0.40/0.35	43/36	2300/2500	150/170	11/15	48/51
15038-1-2HSL	50/60	220	S	0.21/0.17	44/38	2300/2500	150/170	11/15	48/51
15038-1-2HBL	50/60	220	B	0.21/0.17	44/38	2300/2500	150/170	11/15	48/51
15038-1-1HST	50/60	110	S	0.40/0.35	43/36	2300/2500	150/170	11/15	48/51
15038-1-1HBT	50/60	110	B	0.40/0.35	43/36	2300/2500	150/170	11/15	48/51
15038-1-2HST	50/60	220	S	0.21/0.17	44/38	2300/2500	150/170	11/15	48/51
15038-1-2HBT	50/60	220	B	0.21/0.17	44/38	2300/2500	150/170	11/15	48/51

*S: Sleeve bearing B: Ball bearing

*L: 30CM wire cable T: Quick solder terminal

AC fans size 172X150X50mm Aluminum alloy housing PBT Blade 5 blades



Insulating aterial centigrade： 10MΩ at 500VDC between lead and frame

Inner press： 1 min at 1500VAC/50-60HZ ,current〈5mA

Working temperature： -20ºC ~ 80ºC

Working pressure： 85V ~ 125V for 110V and 190V ~ 250V for 220V

Normal temperature working time: Ball bearing hour's five,oil bearing hour's three.

KLS P/N	Freq	Voltage	Bearing Style	Current	Power Watts	Speed	Airflow	Pressure	Noise dBA
	Hz	VAC		AMP		RPM	CFM	mmH_2O	
15038-2-1HSL	50/60	110	S	0.43/0.39	47.3/42.9	2300/2500	150/190	11/13	52/53
15038-2-1HBL	50/60	110	B	0.43/0.39	47.3/42.9	2350/2500	150/190	11/13	53/54
15038-2-2HSL	50/60	220	S	0.24/0.21	52.8/46.2	2300/2500	150/190	11/13	52/53
15038-2-2HBL	50/60	220	B	0.24/0.21	59.4/50.6	2350/2500	150/190	11/13	53/54
15038-2-3HSL	50/60	380	S	0.12/0.10	45.6/38.0	2300/2500	150/190	11/13	52/53
15038-2-3HBL	50/60	380	B	0.12/0.10	45.6/38.0	2350/2500	150/190	11/13	53/54
15038-2-1HST	50/60	110	S	0.43/0.39	47.3/42.9	2300/2500	150/190	11/13	52/53
15038-2-1HBL	50/60	110	B	0.43/0.39	47.3/42.9	2350/2500	150/190	11/13	53/54
15038-2-2HST	50/60	220	S	0.24/0.21	52.8/46.2	2300/2500	150/190	11/13	52/53
15038-2-2HBT	50/60	220	B	0.24/0.21	59.4/50.6	2350/2500	150/190	11/13	53/54
15038-2-3HST	50/60	380	S	0.12/0.10	45.6/38.0	2300/2500	150/190	11/13	52/53
15038-2-3HBT	50/60	380	B	0.12/0.10	45.6/38.0	2350/2500	150/190	11/13	53/54

*S: Sleeve bearing B: Ball bearing

*L: 30CM wire cable T: Quick solder terminal

AC Fans

AC fans size 172X150X50mm Aluminum alloy housing PBT Blade 7 blades



Insulating aterial centigrade： 10MΩ at 500VDC between lead and frame

Inner press： 1 min at 1500VAC/50-60HZ ,current〈5mA

Working temperature： -20ºC ~ 80ºC

Working pressure： 85V ~ 125V for 110V and 190V ~ 250V for 220V

Normal temperature working time: Ball bearing hour's five,oil bearing hour's three.

KLS P/N	Freq	Voltage	Bearing Style	Current	Power Watts	Speed	Airflow	Pressure	Noise dBA
	Hz	VAC		AMP		RPM	CFM	mmH_2O	
15038-3-1HSL	50/60	110	S	0.43/0.39	47.3/42.9	2300/2500	150/190	11/13	52/53
15038-3-1HBL	50/60	110	B	0.43/0.39	47.3/42.9	2350/2500	150/190	11/13	53/54
15038-3-2HSL	50/60	220	S	0.24/0.21	52.8/46.2	2300/2500	150/190	11/13	52/53
15038-3-2HBL	50/60	220	B	0.24/0.21	59.4/50.6	2350/2500	150/190	11/13	53/54
15038-3-3HSL	50/60	380	S	0.12/0.10	45.6/38.0	2300/2500	150/190	11/13	52/53
15038-3-3HBL	50/60	380	B	0.12/0.10	45.6/38.0	2350/2500	150/190	11/13	53/54
15038-3-1HST	50/60	110	S	0.43/0.39	47.3/42.9	2300/2500	150/190	11/13	52/53
15038-3-1HBT	50/60	110	B	0.43/0.39	47.3/42.9	2350/2500	150/190	11/13	53/54
15038-3-2HST	50/60	220	S	0.24/0.21	52.8/46.2	2300/2500	150/190	11/13	52/53
15038-3-2HBT	50/60	220	B	0.24/0.21	59.4/50.6	2350/2500	150/190	11/13	53/54
15038-3-3HST	50/60	380	S	0.12/0.10	45.6/38.0	2300/2500	150/190	11/13	52/53
15038-3-3HBT	50/60	380	B	0.12/0.10	45.6/38.0	2350/2500	150/190	11/13	53/54

*S: Sleeve bearing B: Ball bearing

*L: 30CM wire cable T: Quick solder terminal

AC fans size 150X150X50mm Aluminum alloy housing PBT Blade 5 blades



Insulating aterial centigrade： 10MΩ at 500VDC between lead and frame

Inner press： 1 min at 1500VAC/50-60HZ ,current〈5mA

Working temperature： -20ºC ~ 80ºC

Working pressure： 85V ~ 125V for 110V and 190V ~ 250V for 220V

Normal temperature working time: Ball bearing hour's five,oil bearing hour's three.

KLS P/N	Freq	Voltage	Bearing Style	Current	Power Watts	Speed	Airflow	Pressure	Noise dBA
	Hz	VAC		AMP		RPM	CFM	mmH_2O	
15038-4-1HSL	50/60	110	S	0.43/0.39	47.3/42.9	2300/2500	150/190	11/13	52/53
15038-4-1HBL	50/60	110	B	0.43/0.39	47.3/42.9	2350/2500	150/190	11/13	53/54
15038-4-2HSL	50/60	220	S	0.24/0.21	52.8/46.2	2300/2500	150/190	11/13	52/53
15038-4-2HBL	50/60	220	B	0.24/0.21	59.4/50.6	2350/2500	150/190	11/13	53/54
15038-4-3HSL	50/60	380	S	0.12/0.10	45.6/38.0	2300/2500	150/190	11/13	52/53
15038-4-3HBL	50/60	380	B	0.12/0.10	45.6/38.0	2350/2500	150/190	11/13	19480
15038-4-1HST	50/60	110	S	0.43/0.39	47.3/42.9	2300/2500	150/190	11/13	52/53
15038-4-1HBT	50/60	110	B	0.43/0.39	47.3/42.9	2350/2500	150/190	11/13	53/54
15038-4-2HST	50/60	220	S	0.24/0.21	52.8/46.2	2300/2500	150/190	11/13	52/53
15038-4-2HBT	50/60	220	B	0.24/0.21	59.4/50.6	2350/2500	150/190	11/13	53/54
15038-4-3HST	50/60	380	S	0.12/0.10	45.6/38.0	2300/2500	150/190	11/13	52/53
15038-4-3HBT	50/60	380	B	0.12/0.10	45.6/38.0	2350/2500	150/190	11/13	19480

*S: Sleeve bearing B: Ball bearing

*L: 30CM wire cable T: Quick solder terminal

AC Fans

AC fans size 160X160X60mm Aluminum alloy housing PBT Blade 5 blades



Insulating aterial centigrade： 10MΩ at 500VDC between lead and frame

Inner press： 1 min at 1500VAC/50-60HZ ,current〈5mA

Working temperature： -20ºC ~ 80ºC

Working pressure： 85V ~ 125V for 110V and 190V ~ 250V for 220V

Normal temperature working time: Ball bearing hour's five,oil bearing hour's three.

KLS P/N	Freq	Voltage	Bearing Style	Current	Power Watts		Speed	Airflow	Pressure	Noise dBA
	Hz	VAC		AMP			RPM	CFM	mmH_2O	
16060-1HBL	50	110	B	1	0.36	30	2500	6	3/250	60
16060-2LBL	50	220	B	1	0.1	20	1300	2.5	0.47/400	50
16060-2HBL	50	220	B	1	0.15	30	2500	5.5	1/400	65
16060-3LBL	50	380	B	3	0.06	20	1300	2.5	----	50
16060-3HBL	50	380	B	3	0.09	30	2500	5.5	----	65
16060-3HBL	50	380	B	1	0.18	30	2500	6	0.33/630	60
16060-1HBT	50	110	B	1	0.36	30	2500	6	3/250	60
16060-2LBT	50	220	B	1	0.1	20	1300	2.5	0.47/400	50
16060-2HBT	50	220	B	1	0.15	30	2500	5.5	1/400	65
16060-3LBT	50	380	B	3	0.06	20	1300	2.5	----	50
16060-3HBT	50	380	B	3	0.09	30	2500	5.5	----	65
16060-3HBT	50	380	B	1	0.18	30	2500	6	0.33/630	60

*B: Ball bearing

*L: 30CM wire cable T: Quick solder terminal

AC fans size Φ172X51mm Aluminum alloy housing PBT Blade 5 blades



Insulating aterial centigrade： 10MΩ at 500VDC between lead and frame

Inner press： 1 min at 1500VAC/50-60HZ ,current〈5mA

Working temperature： -20ºC ~ 80ºC

Working pressure： 85V ~ 125V for 110V and 190V ~ 250V for 220V

Normal temperature working time: Ball bearing hour's five,oil bearing hour's three.

KLS P/N	Freq	Voltage	Bearing Style	Current	Power Watts	Speed	Airflow	Pressure	Noise dBA
	Hz	VAC		AMP		RPM	CFM	mmH_2O	
17251-1-1HSL	50/60	110	S	0.43/0.39	47.3/42.9	2300/2500	150/190	11/13	52/53
17251-1-1HBL	50/60	110	B	0.43/0.39	47.3/42.9	2350/2500	150/190	11/13	53/54
17251-1-2HSL	50/60	220	S	0.24/0.21	52.8/46.2	2300/2500	150/190	11/13	52/53
17251-1-2HBL	50/60	220	B	0.24/0.21	59.4/50.6	2350/2500	150/190	11/13	53/54
17251-1-3HSL	50/60	380	S	0.12/0.10	45.6/38.0	2300/2500	150/190	11/13	52/53
17251-1-3HBL	50/60	380	B	0.12/0.10	45.6/38.0	2350/2500	150/190	11/13	53/54
17251-1-1HST	50/60	110	S	0.43/0.39	47.3/42.9	2300/2500	150/190	11/13	52/53
17251-1-1HBT	50/60	110	B	0.43/0.39	47.3/42.9	2350/2500	150/190	11/13	53/54
17251-1-2HST	50/60	220	S	0.24/0.21	52.8/46.2	2300/2500	150/190	11/13	52/53
17251-1-2HBT	50/60	220	B	0.24/0.21	59.4/50.6	2350/2500	150/190	11/13	53/54
17251-1-3HST	50/60	380	S	0.12/0.10	45.6/38.0	2300/2500	150/190	11/13	52/53
17251-1-3HBT	50/60	380	B	0.12/0.10	45.6/38.0	2350/2500	150/190	11/13	53/54

*S: Sleeve bearing B: Ball bearing

*L: 30CM wire cable T: Quick solder terminal

AC Fans

AC fans size Φ172X51mm Aluminum alloy housing PBT Blade 7 blades



Insulating aterial centigrade： 10MΩ at 500VDC between lead and frame

Inner press： 1 min at 1500VAC/50-60HZ ,current〈5mA

Working temperature： -20ºC ~ 80ºC

Working pressure： 85V ~ 125V for 110V and 190V ~ 250V for 220V

Normal temperature working time: Ball bearing hour's five,oil bearing hour's three.

KLS P/N	Freq	Voltage	Bearing Style	Current	Power Watts	Speed	Airflow	Pressure	Noise dBA
	Hz	VAC		AMP		RPM	CFM	mmH_2O	
17251-2-1HSL	50/60	110	S	0.43/0.39	47.3/42.9	2300/2500	150/190	11/13	52/53
17251-2-1HBL	50/60	110	B	0.43/0.39	47.3/42.9	2350/2500	150/190	11/13	53/54
17251-2-2HSL	50/60	220	S	0.24/0.21	52.8/46.2	2300/2500	150/190	11/13	52/53
17251-2-2HBL	50/60	220	B	0.24/0.21	59.4/50.6	2350/2500	150/190	11/13	53/54
17251-2-3HSL	50/60	380	S	0.12/0.10	45.6/38.0	2300/2500	150/190	11/13	52/53
17251-2-3HBL	50/60	380	B	0.12/0.10	45.6/38.0	2350/2500	150/190	11/13	53/54
17251-2-1HST	50/60	110	S	0.43/0.39	47.3/42.9	2300/2500	150/190	11/13	52/53
17251-2-1HBT	50/60	110	B	0.43/0.39	47.3/42.9	2350/2500	150/190	11/13	53/54
17251-2-2HST	50/60	220	S	0.24/0.21	52.8/46.2	2300/2500	150/190	11/13	52/53
17251-2-2HBT	50/60	220	B	0.24/0.21	59.4/50.6	2350/2500	150/190	11/13	53/54
17251-2-3HST	50/60	380	S	0.12/0.10	45.6/38.0	2300/2500	150/190	11/13	52/53
17251-2-3HBT	50/60	380	B	0.12/0.10	45.6/38.0	2350/2500	150/190	11/13	53/54

*S: Sleeve bearing B: Ball bearing

*L: 30CM wire cable T: Quick solder terminal

AC fans size 172*172*51mm Aluminum alloy housing PBT Blade 5 blades



Insulating aterial centigrade： 10MΩ at 500VDC between lead and frame

Inner press： 1 min at 1500VAC/50-60HZ ,current〈5mA

Working temperature： -20ºC ~ 80ºC

Working pressure： 85V ~ 125V for 110V and 190V ~ 250V for 220V

Normal temperature working time: Ball bearing hour's five,oil bearing hour's three.

KLS P/N	Freq	Voltage	Bearing Style	Current	Power Watts	Speed	Airflow	Pressure	Noise dBA
	Hz	VAC		AMP		RPM	CFM	mmH_2O	
17251-3-1HSL	50/60	110	S	0.43/0.39	47.3/42.9	2300/2500	150/190	11/13	52/53
17251-3-1HBL	50/60	110	B	0.43/0.39	47.3/42.9	2350/2500	150/190	11/13	53/54
17251-3-2HSL	50/60	220	S	0.24/0.21	52.8/46.2	2300/2500	150/190	11/13	52/53
17251-3-2HBL	50/60	220	B	0.24/0.21	59.4/50.6	2350/2500	150/190	11/13	53/54
17251-3-3HSL	50/60	380	S	0.12/0.10	45.6/38.0	2300/2500	150/190	11/13	52/53
17251-3-3HBL	50/60	380	B	0.12/0.10	45.6/38.0	2350/2500	150/190	11/13	53/54
17251-3-1HST	50/60	110	S	0.43/0.39	47.3/42.9	2300/2500	150/190	11/13	52/53
17251-3-1HBT	50/60	110	B	0.43/0.39	47.3/42.9	2350/2500	150/190	11/13	53/54
17251-3-2HST	50/60	220	S	0.24/0.21	52.8/46.2	2300/2500	150/190	11/13	52/53
17251-3-2HBT	50/60	220	B	0.24/0.21	59.4/50.6	2350/2500	150/190	11/13	53/54
17251-3-3HST	50/60	380	S	0.12/0.10	45.6/38.0	2300/2500	150/190	11/13	52/53
17251-3-3HBT	50/60	380	B	0.12/0.10	45.6/38.0	2350/2500	150/190	11/13	53/54

*S: Sleeve bearing B: Ball bearing

*L: 30CM wire cable T: Quick solder terminal

AC Fans

AC fans size 172*172*51mm Aluminum alloy housing PBT Blade 7 blades



Insulating aterial centigrade： 10MΩ at 500VDC between lead and frame

Inner press： 1 min at 1500VAC/50-60HZ ,current〈5mA

Working temperature： -20ºC ~ 80ºC

Working pressure： 85V ~ 125V for 110V and 190V ~ 250V for 220V

Normal temperature working time: Ball bearing hour's five,oil bearing hour's three.

KLS P/N	Freq	Voltage	Bearing Style	Current	Power Watts	Speed	Airflow	Pressure	Noise dBA
	Hz	VAC		AMP		RPM	CFM	mmH_2O	
17251-4-1HSL	50/60	110	S	0.43/0.39	47.3/42.9	2300/2500	150/190	11/13	52/53
17251-4-1HBL	50/60	110	B	0.43/0.39	47.3/42.9	2350/2500	150/190	11/13	53/54
17251-4-2HSL	50/60	220	S	0.24/0.21	52.8/46.2	2300/2500	150/190	11/13	52/53
17251-4-2HBL	50/60	220	B	0.24/0.21	59.4/50.6	2350/2500	150/190	11/13	53/54
17251-4-3HSL	50/60	380	S	0.12/0.10	45.6/38.0	2300/2500	150/190	11/13	52/53
17251-4-3HBL	50/60	380	B	0.12/0.10	45.6/38.0	2350/2500	150/190	11/13	53/54
17251-4-1HST	50/60	110	S	0.43/0.39	47.3/42.9	2300/2500	150/190	11/13	52/53
17251-4-1HBT	50/60	110	B	0.43/0.39	47.3/42.9	2350/2500	150/190	11/13	53/54
17251-4-2HST	50/60	220	S	0.24/0.21	52.8/46.2	2300/2500	150/190	11/13	52/53
17251-4-2HBT	50/60	220	B	0.24/0.21	59.4/50.6	2350/2500	150/190	11/13	53/54
17251-4-3HST	50/60	380	S	0.12/0.10	45.6/38.0	2300/2500	150/190	11/13	52/53
17251-4-3HBT	50/60	380	B	0.12/0.10	45.6/38.0	2350/2500	150/190	11/13	53/54

*S: Sleeve bearing B: Ball bearing

*L: 30CM wire cable T: Quick solder terminal

AC fans size 180X180X60mm Aluminum alloy housing PBT Blade 5 blades



Insulating aterial centigrade： 10MΩ at 500VDC between lead and frame

Inner press： 1 min at 1500VAC/50-60HZ ,current〈5mA

Working temperature： -20ºC ~ 80ºC

Working pressure： 85V ~ 125V for 110V and 190V ~ 250V for 220V

Normal temperature working time: Ball bearing hour's five,oil bearing hour's three.

KLS P/N	Freq	Voltage	Bearing Style	Current	Power Watts	Speed	Airflow	Pressure	Noise dBA
	Hz	VAC		AMP		RPM	CFM	mmH_2O	
18060-1HSL	50/60	110	S	0.62/0.44	72/50	2300/2500	290/330	15/17	57/59
18060-1HBL	50/60	110	B	0.62/0.44	72/50	2350/2500	290/330	15/17	57/59
18060-2HSL	50/60	220	S	0.32/0.22	72/50	2300/2500	290/330	15/17	57/59
18060-2HBL	50/60	220	B	0.32/0.22	72/50	2350/2500	290/330	15/17	57/59
18060-1HST	50/60	110	S	0.62/0.44	72/50	2300/2500	290/330	15/17	57/59
18060-1HBT	50/60	110	B	0.62/0.44	72/50	2350/2500	290/330	15/17	57/59
18060-2HST	50/60	220	S	0.32/0.22	72/50	2300/2500	290/330	15/17	57/59
18060-2HBT	50/60	220	B	0.32/0.22	72/50	2350/2500	290/330	15/17	57/59

*S: Sleeve bearing B: Ball bearing

*L: 30CM wire cable T: Quick solder terminal

AC Fans

AC fans size 210X210X70mm Aluminum alloy housing PBT Blade 5 blades

Insulating aterial centigrade： 10MΩ at 500VDC between lead and frame

Inner press： 1 min at 1500VAC/50-60HZ ,current〈5mA

Working temperature： -20ºC ~ 80ºC

Working pressure： 85V ~ 125V for 110V and 190V ~ 250V for 220V

Normal temperature working time: Ball bearing hour's five,oil bearing hour's three.

KLS P/N	Freq	Voltage	Bearing Style	Phase	Current	Power Watts	Speed	Airflow	Capacitor	Noise dBA
	Hz	VAC			AMP		RPM	CFM	μF/V	
21070-2LBL	50	220	B	1	0.15	25	1200	6.5	1/400	60
21070-2HBL	50	220	B	1	0.3	65	2300	13	2/400	70
21070-3LBL	50	380	B	3	0.08	25	1200	6.5	----	60
21070-3HBL	50	380	B	3	0.18	65	2300	13	----	70
21070-3HBL	50	380	B	1	0.18	65	2300	13	1/630	70
21070-2LBL	50	220	B	1	0.15	25	1200	6.5	1/400	60
21070-2HBT	50	220	B	1	0.3	65	2300	13	2/400	70
21070-3LBT	50	380	B	3	0.08	25	1200	6.5	----	60
21070-3HBT	50	380	B	3	0.18	65	2300	13	----	70
21070-3HBT	50	380	B	1	0.18	65	2300	13	1/630	70

*B: Ball bearing

*L: 30CM wire cable T: Quick solder terminal

AC fans size Φ220X60mm Aluminum alloy housing PBT Blade 5 blades

Insulating aterial centigrade： 10MΩ at 500VDC between lead and frame

Inner press： 1 min at 1500VAC/50-60HZ ,current〈5mA

Working temperature： -20ºC ~ 80ºC

Working pressure： 85V ~ 125V for 110V and 190V ~ 250V for 220V

Normal temperature working time: Ball bearing hour's five,oil bearing hour's three.



KLS P/N	Freq	Voltage	Bearing Style	Current	Power Watts	Speed	Airflow	Pressure	Noise dBA
	Hz	VAC		AMP		RPM	CFM	mmH_2O	
22060-1-1HSL	50/60	110	S	0.76/0.65	77/55	2300/2500	335/350	17/19	64/66
22060-1-1HBL	50/60	110	B	0.76/0.65	77/55	2300/2500	335/350	17/19	64/66
22060-1-2HSL	50/60	220	S	0.38/0.32	72/50	2300/2500	335/350	17/19	64/66
22060-1-2HBL	50/60	220	B	0.38/0.32	72/50	2350/2500	335/350	17/19	64/66
22060-1-1HST	50/60	110	S	0.76/0.65	77/55	2300/2500	335/350	17/19	64/66
22060-1-1HBT	50/60	110	B	0.76/0.65	77/55	2300/2500	335/350	17/19	64/66
22060-1-2HST	50/60	220	S	0.38/0.32	72/50	2300/2500	335/350	17/19	64/66
22060-1-2HBT	50/60	220	B	0.38/0.32	72/50	2350/2500	335/350	17/19	64/66

*S: Sleeve bearing B: Ball bearing

*L: 30CM wire cable T: Quick solder terminal

AC Fans

AC fans size 220X220X60mm Aluminum alloy housing PBT Blade 5 blades



Insulating aterial centigrade： 10MΩ at 500VDC between lead and frame

Inner press： 1 min at 1500VAC/50-60HZ ,current〈5mA

Working temperature： -20ºC ~ 80ºC

Working pressure： 85V ~ 125V for 110V and 190V ~ 250V for 220V

Normal temperature working time: Ball bearing hour's five,oil bearing hour's three.

KLS P/N	Freq	Voltage	Bearing Style	Current	Power Watts	Speed	Airflow	Pressure	Noise dBA
	Hz	VAC		AMP		RPM	CFM	mmH_2O	
22060-2-1HSL	50/60	110	S	0.76/0.65	77/55	2300/2500	335/350	17/19	64/66
22060-2-1HBL	50/60	110	B	0.76/0.65	77/55	2300/2500	335/350	17/19	64/66
22060-2-2HSL	50/60	220	S	0.38/0.32	72/50	2300/2500	335/350	17/19	64/66
22060-2-2HBL	50/60	220	B	0.38/0.32	72/50	2350/2500	335/350	17/19	64/66
22060-2-1HST	50/60	110	S	0.76/0.65	77/55	2300/2500	335/350	17/19	64/66
22060-2-1HBT	50/60	110	B	0.76/0.65	77/55	2300/2500	335/350	17/19	64/66
22060-2-2HST	50/60	220	S	0.38/0.32	72/50	2300/2500	335/350	17/19	64/66
22060-2-2HBT	50/60	220	B	0.38/0.32	72/50	2350/2500	335/350	17/19	64/66

*S: Sleeve bearing B: Ball bearing

*L: 30CM wire cable T: Quick solder terminal

Axial fans size Φ250X90mm Alloy iron housing Alloy iron Blade 5 blades

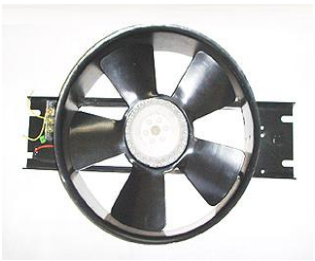

Insulating aterial centigrade： 10MΩ at 500VDC between lead and frame

Inner press： 1 min at 1500VAC/50-60HZ ,current〈5mA

Working temperature： -20ºC ~ 80ºC

Working pressure： 85V ~ 125V for 110V and 190V ~ 250V for 220V

Normal temperature working time: Ball bearing hour's five,oil bearing hour's three.

KLS P/N	Freq	Voltage	Bearing Style	Phase	Current	Power Watts	Speed	Airflow	Capacitor	Noise dBA
	Hz	VAC			AMP		RPM	M^3/min	μF/V	
250-2LBL	50	220	B	1	0.2	40	1300	12	1/400	60
250-3LBL	50	380	B	3	0.1	40	1300	12	----	60
250-3LBL	50	380	B	1	0.12	40	1300	12	0.22/630	60
250-2HBL	50	220	B	1	0.5	100	2600	20	4/400	72
250-3HBL	50	380	B	3	0.2	100	2600	20	----	72
250-3HBL	50	380	B	1	0.35	100	2600	20	2/400	72
250-2LBT	50	220	B	1	0.2	40	1300	12	1/400	60
250-3LBT	50	380	B	3	0.1	40	1300	12	----	60
250-3LBT	50	380	B	1	0.12	40	1300	12	0.22/630	60
250-2HBT	50	220	B	1	0.5	100	2600	20	4/400	72
250-3HBT	50	380	B	3	0.2	100	2600	20	----	72
250-3HBT	50	380	B	1	0.35	100	2600	20	2/400	72

*B: Ball bearing

*L: 30CM wire cable T: Quick solder terminal

DC Fans

Axial fans size Φ300X100mm Alloy iron housing Alloy iron Blade 5 blades



Insulating aterial centigrade： 10MΩ at 500VDC between lead and frame

Inner press： 1 min at 1500VAC/50-60HZ ,current〈5mA

Working temperature： -20ºC ~ 80ºC

Working pressure： 85V ~ 125V for 110V and 190V ~ 250V for 220V

Normal temperature working time: Ball bearing hour's five,oil bearing hour's three.

KLS P/N	Freq	Voltage	Bearing Style	Phase	Current	Power Watts	Speed	Airflow	Capacitor	Noise dBA
	Hz	VAC			AMP		RPM	M^3/min	μF/V	
300-2LBL	50	220	B	1	0.4	80	1300	22	4/400	65
300-3LBL	50	380	B	3	0.2	80	1300	22	----	65
300-3LBL	50	380	B	1	0.22	80	1300	22	1/630	65
300-2HBL	50	220	B	1	0.9	200	2100	34	3/400	76
300-3HBL	50	380	B	3	0.6	180	2200	34	----	76
300-3HBL	50	380	B	1	0.65	200	2100	34	1/630	76
300-2LBT	50	220	B	1	0.4	80	1300	22	4/400	65
300-3LBT	50	380	B	3	0.2	80	1300	22	----	65
300-3LBT	50	380	B	1	0.22	80	1300	22	1/630	65
300-2HBT	50	220	B	1	0.9	200	2100	34	3/400	76
300-3HBT	50	380	B	3	0.6	180	2200	34	----	76
300-3HBT	50	380	B	1	0.65	200	2100	34	1/630	76

*B: Ball bearing

*L: 30CM wire cable T: Quick solder terminal

DC fans size 25X25X10mm PBT housing PBT Blade 7 blades



Insulating aterial centigrade： 10MΩ at 500VDC between lead and frame

Inner press： 1 min at 1500VAC/50-60HZ ,current〈5mA

Working temperature： -20ºC ~ 80ºC

Working pressure： 85V ~ 125V for 110V and 190V ~ 250V for 220V

Normal temperature working time: Ball bearing hour's five,oil bearing hour's three.

KLS P/N	Bearing Style	Voltage VDC	Current	Power Watts	Speed	Airflow	AirPressure	Noise dBA
			AMP		RPM	CFM	mmH_2O	
D2510-05HS	S	5	0.11	0.55	9500	2.1	3.8	21.5
D2510-05MS	S	5	0.9	0.45	8000	1.8	2.8	19.8
D2510-05LS	S	5	0.7	0.35	6000	1.4	1.8	16.2
D2510-05HB	B	5	0.11	0.55	1000	2.3	4	22.5
D2510-05MB	B	5	0.9	0.45	8500	1.9	3	19.9
D2510-05LB	B	5	0.7	0.35	6800	1.5	2	17
D2510-12HS	S	12	0.09	1.08	9500	2.1	3.8	21.5
D2510-12MS	S	12	0.07	0.84	8000	1.8	2.8	19.8
D2510-12LS	S	12	0.06	0.72	6000	1.4	1.8	16.2
D2510-12HB	B	12	0.09	1.08	1000	2.3	4	22.5
D2510-12MB	B	12	0.07	0.84	8500	1.9	3	19.9
D2510-12LS	S	12	0.06	0.72	6800	1.5	2	17

*H:0.55W M:0.45W L:0.35W

*S: Sleeve bearing B: Ball bearing

DC Fans

DC fans size 30X30X10mm PBT housing PBT Blade 7 blades



Insulating aterial centigrade：	10MΩ at 500VDC between lead and frame
Inner press：	1 min at 1500VAC/50-60HZ ,current〈5mA
Working temperature：	-20ºC ~ 80ºC
Working pressure：	85V ~ 125V for 110V and 190V ~ 250V for 220V
Normal temperature working time:	Ball bearing hour's five,oil bearing hour's three.

KLS P/N	Bearing Style	Voltage VDC	Current AMP	Power Watts	Speed RPM	Airflow CFM	AirPressure mmH_2O	Noise dBA
D3010-05HS	S	5	0.1	0.5	7200	3.1	3.1	21.5
D3010-05MS	S	5	0.08	0.4	6200	2.8	2.4	20
D3010-05LS	S	5	0.06	0.3	5300	2.4	1.7	18.5
D3010-05HB	B	5	0.1	0.5	7800	3.3	3.3	22.5
D3010-05MB	B	5	0.08	0.4	6800	3	2.6	20.5
D3010-05LB	B	5	0.06	0.3	5900	2.6	1.8	18.9
D3010-12HS	S	12	0.09	1.08	7200	3.1	3.1	21.5
D3010-12MS	S	12	0.08	0.96	6200	2.8	2.4	20
D3010-12LS	S	12	0.07	0.84	5300	2.4	1.7	18.5
D3010-12HB	B	12	0.09	1.08	7800	3.3	3.3	22.5
D3010-12MB	B	12	0.08	0.96	6800	3	2.6	20.5
D3010-12LB	B	12	0.07	0.84	5900	2.6	1.8	18.9

*H:High M:Middle L:Low

*S: Sleeve bearing B: Ball bearing

DC Fans

DC fans size 30X30X10mm PBT housing PBT Blade 7 blades



Insulating aterial centigrade： 10MΩ at 500VDC between lead and frame

Inner press： 1 min at 1500VAC/50-60HZ ,current〈5mA

Working temperature： -20ºC ~ 80ºC

Working pressure： 85V ~ 125V for 110V and 190V ~ 250V for 220V

Normal temperature working time: Ball bearing hour's five,oil bearing hour's three.

KLS P/N	Bearing Style	Voltage VDC	Current AMP	Power Watts	Speed RPM	Airflow CFM	AirPressure mmH_2O	Noise dBA
D4010-1-05HS	S	5	0.18	0.9	6400	6.5	4.2	30.5
D4010-1-05MS	S	5	0.13	0.65	5500	5.4	3	25.5
D4010-1-05LS	S	5	0.09	0.45	4500	4.3	1.9	22
D4010-1-05HB	B	5	0.18	0.9	6500	6.6	4.3	31
D4010-1-05MB	B	5	0.13	0.65	5600	5.5	3.1	26.5
D4010-1-05LB	B	5	0.09	0.45	4700	4.6	2	22.5
D4010-1-12HS	S	12	0.12	1.44	7500	7.5	6	36.5
D4010-1-12MS	S	12	0.09	1.08	6400	6.4	4.1	30.5
D4010-1-12LS	S	12	0.06	0.72	4400	4.5	1.9	20
D4010-1-12HB	B	12	0.12	1.44	7700	7.6	6.1	37
D4010-1-12MB	B	12	0.09	1.08	6500	6.6	4.3	30.5
D4010-1-12LB	B	12	0.06	0.72	4500	4.6	2	20.5
D4010-1-24MS	S	24	0.04	0.96	6000	6.3	4.1	29.5
D4010-1-24MB	B	24	0.04	0.96	6500	6.5	4.3	30.5

*H:High M:Middle L:Low

*S: Sleeve bearing B: Ball bearing

DC fans size 40X40X20mm PBT housing PBT Blade 5 blades



Insulating aterial centigrade： 10MΩ at 500VDC between lead and frame

Inner press： 1 min at 1500VAC/50-60HZ ,current〈5mA

Working temperature： -20ºC ~ 80ºC

Working pressure： 85V ~ 125V for 110V and 190V ~ 250V for 220V

Normal temperature working time: Ball bearing hour's five,oil bearing hour's three.

KLS P/N	Bearing Style	Voltage VDC	Current AMP	Power Watts	Speed RPM	Airflow CFM	AirPressure mmH_2O	Noise dBA
D4010-2-05MS	S	5	0.18	0.9	5500	6.1	3.5	27.5
D4010-2-05LS	S	5	0.11	0.55	4200	4.3	1.6	15.9
D4010-2-05MB	B	5	0.18	0.9	5500	6.1	3.5	27.5
D4010-2-05LB	B	5	0.11	0.55	4200	4.3	1.6	15.9
D4010-2-12MS	S	12	0.09	0.45	5500	6.1	3.5	27.5
D4010-2-12LS	S	12	0.06	0.3	4200	4.3	1.6	15.9
D4010-2-12MB	B	12	0.09	0.45	5500	6.1	3.5	27.5
D4010-2-12LB	B	12	0.06	0.3	4200	4.3	1.6	15.9
D4010-2-24MS	S	24	0.06	0.45	5400	5.9	3.4	26.5
D4010-2-24LS	S	24	0.06	0.3	5500	6.1	3.5	27.5

*H:High M:Middle L:Low

*S: Sleeve bearing B: Ball bearing

DC Fans

DC fans size 50X50X10mm PBT housing PBT Blade 7 blades



Insulating aterial centigrade : 10MΩ at 500VDC between lead and frame
Inner press : 1 min at 1500VAC/50-60HZ ,current〈5mA
Working temperature : -20ºC ~ 80ºC
Working pressure : 85V ~ 125V for 110V and 190V ~ 250V for 220V
Normal temperature working time: Ball bearing hour's five,oil bearing hour's three.

KLS P/N	Bearing Style	Voltage VDC	Current AMP	Power Watts	Speed RPM	Airflow CFM	AirPressure mmH_2O	Noise dBA
D5010-1-05HS	S	5	0.22	1.1	5200	12.5	3.3	32.9
D5010-1-05MS	S	5	0.18	0.9	4300	10	2.4	30.3
D5010-1-05HB	B	5	0.22	1.65	5500	13.5	3.5	33.5
D5010-1-05MB	B	5	0.18	130	4600	10.7	2.6	30.9
D5010-1-12HS	S	12	0.12	1.44	5600	13.9	3.7	33.5
D5010-1-12MS	S	12	0.09	1.08	4600	10.7	2.6	30.9
D5010-1-12LS	S	12	0.06	0.72	3600	9	2	27.3
D5010-1-12HB	B	12	0.12	1.44	6000	14.5	3.9	34.9
D5010-1-12MB	B	12	0.09	1.08	5100	11.7	3.2	33.3
D5010-1-12LB	B	12	0.06	0.72	4300	9.7	2.4	30.3
D5010-1-24MS	S	24	0.04	0.96	5100	11.7	3.2	33.3
D5010-1-24MB	B	24	0.04	0.96	5400	12.5	3.4	33

*H:High M:Middle L:Low

*S: Sleeve bearing B: Ball bearing

DC fans size 50X50X15mm PBT housing PBT Blade 7 blades



Insulating aterial centigrade : 10MΩ at 500VDC between lead and frame
Inner press : 1 min at 1500VAC/50-60HZ ,current〈5mA
Working temperature : -20ºC ~ 80ºC
Working pressure : 85V ~ 125V for 110V and 190V ~ 250V for 220V
Normal temperature working time: Ball bearing hour's five,oil bearing hour's three.

KLS P/N	Bearing Style	Voltage VDC	Current AMP	Power Watts	Speed RPM	Airflow CFM	AirPressure mmH_2O	Noise dBA
D5010-2-12HS	S	12	0.17	2.04	5000	14.7	4	30.9
D5010-2-12MS	S	12	0.13	1.56	4500	13.1	3.2	29.3
D5010-2-12LS	S	12	0.1	1.2	3800	11	2.3	26.3
D5010-2-12HB	B	12	0.17	2.04	5200	15	4.1	31.3
D5010-2-12MB	B	12	0.13	1.56	4700	13.5	3.3	30
D5010-2-12LB	B	12	0.1	1.2	3900	11.6	2.4	27.3

*H:High M:Middle L:Low

*S: Sleeve bearing B: Ball bearing

DC Fans

DC fans size 60X60X10mm PBT housing PBT Blade 11 blades



Insulating aterial centigrade : 10MΩ at 500VDC between lead and frame

Inner press : 1 min at 1500VAC/50-60HZ ,current〈5mA

Working temperature : -20ºC ~ 80ºC

Working pressure : 85V ~ 125V for 110V and 190V ~ 250V for 220V

Normal temperature working time: Ball bearing hour's five,oil bearing hour's three.

KLS P/N	Bearing Style	Voltage VDC	Current AMP	Power Watts	Speed RPM	Airflow CFM	AirPressure mmH_2O	Noise dBA
D6010-1-12HS	S	12	0.13	1.56	4500	16	2.2	32.9
D6010-1-12MS	S	12	0.11	1.32	3900	13.5	1.9	28.8
D6010-1-12LS	S	12	0.09	1.08	3600	11.4	1.6	27.5
D6010-1-12HB	B	12	0.13	1.56	4700	16.5	2.4	34.9
D6010-1-12MB	B	12	0.11	1.32	4100	14	2	29.8
D6010-1-12LB	B	12	0.09	1.08	3800	11.9	1.7	27

*H:High M:Middle L:Low

*S: Sleeve bearing B: Ball bearing

DC fans size 60X60X12mm PBT housing PBT Blade 7 blades



Insulating aterial centigrade : 10MΩ at 500VDC between lead and frame

Inner press : 1 min at 1500VAC/50-60HZ ,current〈5mA

Working temperature : -20ºC ~ 80ºC

Working pressure : 85V ~ 125V for 110V and 190V ~ 250V for 220V

Normal temperature working time: Ball bearing hour's five,oil bearing hour's three.

KLS P/N	Bearing Style	Voltage VDC	Current AMP	Power Watts	Speed RPM	Airflow CFM	AirPressure mmH_2O	Noise dBA
D6010-2-12HS	S	12	0.13	1.56	4500	16	2.2	32.9
D6010-2-12MS	S	12	0.11	1.32	3900	13.5	1.9	28.8
D6010-2-12LS	S	12	0.09	1.08	3600	11.4	1.6	27.5
D6010-2-12HB	B	12	0.13	1.56	4700	16.5	2.4	34.9
D6010-2-12MB	B	12	0.11	1.32	4100	14	2	29.8
D6010-2-12LB	B	12	0.09	1.08	3800	11.9	1.7	27

*H:High M:Middle L:Low

*S: Sleeve bearing B: Ball bearing

DC Fans

DC fans size 60X60X15mm PBT housing PBT Blade 7 blades



Insulating aterial centigrade : 10MΩ at 500VDC between lead and frame
Inner press : 1 min at 1500VAC/50-60HZ ,current〈5mA
Working temperature : -20ºC ~ 80ºC
Working pressure : 85V ~ 125V for 110V and 190V ~ 250V for 220V
Normal temperature working time: Ball bearing hour's five,oil bearing hour's three.

KLS P/N	Bearing Style	Voltage VDC	Current AMP	Power Watts	Speed RPM	Airflow CFM	AirPressure mmH_2O	Noise dBA
D6010-3-12HS	S	12	0.23	2.76	4000	19	3	32.9
D6010-3-12MS	S	12	0.15	1.8	3000	15.5	2	26.8
D6010-3-12LS	S	12	0.11	1.32	2700	12.4	1.6	23.5
D6010-3-12HB	B	12	0.23	2.76	4100	20.5	3.1	33.9
D6010-3-12MB	B	12	0.15	1.8	3100	16	2.1	27.8
D6010-3-12LB	B	12	0.11	1.32	2800	12.9	1.7	24

*H:High M:Middle L:Low

*S: Sleeve bearing B: Ball bearing

DC fans size 60X60X20mm PBT housing PBT Blade 7 blades



Insulating aterial centigrade : 10MΩ at 500VDC between lead and frame
Inner press : 1 min at 1500VAC/50-60HZ ,current〈5mA
Working temperature : -20ºC ~ 80ºC
Working pressure : 85V ~ 125V for 110V and 190V ~ 250V for 220V
Normal temperature working time: Ball bearing hour's five,oil bearing hour's three.

KLS P/N	Bearing Style	Voltage VDC	Current AMP	Power Watts	Speed RPM	Airflow CFM	AirPressure mmH_2O	Noise dBA
D6010-4-12HS	S	12	0.18	2.16	4100	22.5	4.7	29.9
D6010-4-12MS	S	12	0.15	1.8	3400	18.5	3.5	25.8
D6010-4-12LS	S	12	0.12	1.44	3000	15.3	2.6	21.5
D6010-4-12HB	B	12	0.18	2.16	4100	22.5	4.7	29.9
D6010-4-12MB	B	12	0.15	1.8	3400	18.5	3.5	25.8
D6010-4-12LB	B	12	0.12	1.44	3000	15.3	2.6	21.5

*H:High M:Middle L:Low

*S: Sleeve bearing B: Ball bearing

DC Fans

DC fans size 60X60X20mm PBT housing PBT Blade 7 blades



Insulating aterial centigrade： 10MΩ at 500VDC between lead and frame

Inner press： 1 min at 1500VAC/50-60HZ ,current〈5mA

Working temperature： -20ºC ~ 80ºC

Working pressure： 85V ~ 125V for 110V and 190V ~ 250V for 220V

Normal temperature working time: Ball bearing hour's five,oil bearing hour's three.

KLS P/N	Bearing Style	Voltage VDC	Current AMP	Power Watts	Speed RPM	Airflow CFM	AirPressure mmH_2O	Noise dBA
D6010-5-12HS	S	12	0.16	1.92	4500	23.5	5.6	29.9
D6010-5-12MS	S	12	0.13	1.56	3900	21.5	4.2	25.8
D6010-5-12LS	S	12	0.08	0.96	3500	19.3	3.4	21.5
D6010-5-12HB	B	12	0.16	1.92	4500	23.5	5.6	29.9
D6010-5-12MB	B	12	0.13	1.56	3900	21.5	4.2	25.8
D6010-5-12LB	B	12	0.08	0.96	3500	19.3	3.4	21.5
D6010-5-24HS	S	24	0.16	3.12	4500	23.5	5.6	29.9
D6010-5-24MS	S	24	0.13	1.68	3900	21.5	4.2	25.8
D6010-5-24LS	S	24	0.08	1.2	3500	19.3	3.4	21.5
D6010-5-24HB	B	24	0.13	3.12	4500	23.5	5.6	29.9
D6010-5-24MB	B	24	0.07	1.68	3900	21.5	4.2	25.8
D6010-5-24LB	B	24	0.05	1.2	3500	19.3	3.4	21.5

*H:High M:Middle L:Low

*S: Sleeve bearing B: Ball bearing

DC fans size 70X70X15cm PBT housing PBT Blade 11 blades



Insulating aterial centigrade： 10MΩ at 500VDC between lead and frame

Inner press： 1 min at 1500VAC/50-60HZ ,current〈5mA

Working temperature： -20ºC ~ 80ºC

Working pressure： 85V ~ 125V for 110V and 190V ~ 250V for 220V

Normal temperature working time: Ball bearing hour's five,oil bearing hour's three.

KLS P/N	Bearing Style	Voltage VDC	Current AMP	Power Watts	Speed RPM	Airflow CFM	AirPressure mmH_2O	Noise dBA
D7015-1-12HS	S	12	0.19	2.28	4200	31.5	3.3	29.9
D7015-1-12MS	S	12	0.16	1.92	3800	26	2.5	22.3
D7015-1-12HB	B	12	0.19	2.28	4200	31.5	3.3	29.9
D7015-1-12MB	B	12	0.16	1.92	3800	26	2.5	22.3
D7015-1-24HS	S	24	0.11	2.64	4200	31.5	3.3	29.9
D7015-1-24MS	S	24	0.1	2.4	3800	26	2.5	22.3
D7015-1-24HB	B	24	0.11	2.64	4200	31.5	3.3	29.9
D7015-1-24MB	B	24	0.1	2.4	3800	26	2.5	22.3

*H:High M:Middle L:Low

*S: Sleeve bearing B: Ball bearing

DC Fans

DC fans size 70X70X25mm PBT housing PBT Blade 7 blades



Insulating aterial centigrade： 10MΩ at 500VDC between lead and frame

Inner press： 1 min at 1500VAC/50-60HZ ,current〈5mA

Working temperature： -20ºC ~ 80ºC

Working pressure： 85V ~ 125V for 110V and 190V ~ 250V for 220V

Normal temperature working time: Ball bearing hour's five,oil bearing hour's three.

KLS P/N	Bearing Style	Voltage VDC	Current AMP	Power Watts	Speed RPM	Airflow CFM	AirPressure mmH_2O	Noise dBA
D7015-2-12HS	S	12	0.24	2.88	3010	27.3	3.5	31.4
D7015-2-12MS	S	12	0.16	1.92	2440	22.1	2	25.4
D7015-2-12HB	B	12	0.24	2.88	3010	27.3	3.5	31.4
D7015-2-12MB	B	12	0.16	1.92	2440	22.1	2	25.4
D7015-2-24HS	S	24	0.15	3.6	3010	27.3	3.5	31.4
D7015-2-24MS	S	24	0.13	3.12	2440	22.1	2	25.4
D7015-2-24HB	B	24	0.15	3.6	3010	27.3	3.5	31.4
D7015-2-24MB	B	24	0.13	3.12	2440	22.1	2	25.4

*H:High M:Middle L:Low

*S: Sleeve bearing B: Ball bearing

DC fans size 80X80X15mm PBT housing PBT Blade 9 blades



Insulating aterial centigrade： 10MΩ at 500VDC between lead and frame

Inner press： 1 min at 1500VAC/50-60HZ ,current〈5mA

Working temperature： -20ºC ~ 80ºC

Working pressure： 85V ~ 125V for 110V and 190V ~ 250V for 220V

Normal temperature working time: Ball bearing hour's five,oil bearing hour's three.

KLS P/N	Bearing Style	Voltage VDC	Current AMP	Power Watts	Speed RPM	Airflow CFM	AirPressure mmH_2O	Noise dBA
D8015-1-12HS	S	12	0.43	2.15	3200	29.9	2.7	31.4
D8015-1-12MS	S	12	0.24	1.2	2440	22.4	2.2	26
D8015-1-12HB	B	12	0.43	2.15	3200	29.9	2.7	31.4
D8015-1-12MB	B	12	0.24	1.2	2440	22.4	2.2	26
D8015-1-24HS	S	24	0.19	2.28	3200	29.9	2.7	31.4
D8015-1-24MS	S	24	0.15	1.8	2440	22.4	2.2	26
D8015-1-24HB	B	24	0.19	2.28	3200	29.9	2.7	31.4
D8015-1-24MB	B	24	0.15	1.8	2440	22.4	2.2	26

*H:High M:Middle L:Low

*S: Sleeve bearing B: Ball bearing

DC Fans

DC fans size 80X80X20mm PBT housing PBT Blade 7 blades



Insulating aterial centigrade：	10MΩ at 500VDC between lead and frame
Inner press：	1 min at 1500VAC/50-60HZ ,current〈5mA
Working temperature：	-20ºC ~ 80ºC
Working pressure：	85V ~ 125V for 110V and 190V ~ 250V for 220V
Normal temperature working time:	Ball bearing hour's five,oil bearing hour's three.

KLS P/N	Bearing Style	Voltage VDC	Current AMP	Power Watts	Speed RPM	Airflow CFM	AirPressure mmH_2O	Noise dBA
D8015-2-12HS	S	12	0.24	2.88	3010	27.3	3.5	31.4
D8015-2-12MS	S	12	0.16	1.92	2440	22.1	2	25.4
D8015-2-12HB	B	12	0.24	2.88	3010	27.3	3.5	31.4
D8015-2-12MB	B	12	0.16	1.92	2440	22.1	2	25.4
D8015-2-24HS	S	24	0.15	3.6	3010	27.3	3.5	31.4
D8015-2-24MS	S	24	0.13	3.12	2440	22.1	2	25.4
D8015-2-24HB	B	24	0.15	3.6	3010	27.3	3.5	31.4
D8015-2-24MB	B	24	0.13	3.12	2440	22.1	2	25.4

*H:High M:Middle L:Low

*S: Sleeve bearing B: Ball bearing

DC Fans

DC fans size 80X80X25mm PBT housing PBT Blade 7 blades



Insulating aterial centigrade：	10MΩ at 500VDC between lead and frame
Inner press：	1 min at 1500VAC/50-60HZ ,current〈5mA
Working temperature：	-20ºC ~ 80ºC
Working pressure：	85V ~ 125V for 110V and 190V ~ 250V for 220V
Normal temperature working time:	Ball bearing hour's five,oil bearing hour's three.

KLS P/N	Bearing Style	Voltage VDC	Current AMP	Power Watts	Speed RPM	Airflow CFM	AirPressure mmH_2O	Noise dBA
D8015-3-12US	S	12	0.26	3.12	3600	44.5	5.7	40
D8015-3-12HS	S	12	0.2	2.4	3200	40.3	5	37
D8015-3-12MS	S	12	0.15	1.8	2500	30.3	3	30
D8015-3-12LS	S	12	0.12	1.44	2200	26.5	2.3	25.9
D8015-3-12DS	S	12	0.08	0.96	1900	21.3	1.4	20
D8015-3-12UB	B	12	0.26	3.12	3700	45	6	40.4
D8015-3-12HB	B	12	0.2	2.4	3400	41.3	5.2	38
D8015-3-12MB	B	12	0.15	1.8	2600	31.3	3.5	31.4
D8015-3-12LB	B	12	0.12	1.44	2300	27.5	2.6	27.4
D8015-3-12DB	B	12	0.08	0.96	2000	23.3	1.5	22
D8015-3-24US	S	24	0.15	3.6	3600	44	5.9	38.1
D8015-3-24HS	S	24	0.11	2.64	3300	39.3	5	36
D8015-3-24MS	S	24	0.09	2.16	2700	32.3	3.6	31.4
D8015-3-24LS	S	24	0.07	1.68	2200	25	2.4	26.4
D8015-3-24UB	B	24	0.15	3.6	3700	46	6.1	40.4
D8015-3-24HB	B	24	0.11	2.64	3400	41.3	5.2	38
D8015-3-24MB	B	24	0.09	2.16	2800	34.3	3.8	33.4
D8015-3-24LB	B	24	0.07	1.68	2300	27.1	2.6	27.4

*U:Ultra H:High M:Middle L:Low D:

*S: Sleeve bearing B: Ball bearing

DC Fans

DC fans size 92X92X25mm PBT housing PBT Blade 9 blades



Insulating aterial centigrade： 10MΩ at 500VDC between lead and frame

Inner press： 1 min at 1500VAC/50-60HZ ,current〈5mA

Working temperature： -20ºC ~ 80ºC

Working pressure： 85V ~ 125V for 110V and 190V ~ 250V for 220V

Normal temperature working time: Ball bearing hour's five,oil bearing hour's three.

KLS P/N	Bearing Style	Voltage VDC	Current AMP	Power Watts	Speed RPM	Airflow CFM	AirPressure mmH_2O	Noise dBA
D9225-12HS	S	12	0.28	3.36	3000	62	3.9	38.4
D9225-12MS	S	12	0.21	2.52	2600	58.5	3.6	36
D9225-12LS	S	12	0.16	1.92	2300	49.3	2.6	30.5
D9225-12HB	B	12	0.28	3.36	3100	63	4	39.4
D9225-12MB	B	12	0.21	2.52	2700	59.5	3.7	37
D9225-12LB	B	12	0.16	1.92	2400	50.3	2.7	31.7
D9225-24HS	S	24	0.16	3.84	3000	62	3.9	38.4
D9225-24MS	S	24	0.13	3.12	2600	58.5	3.6	36
D9225-24LS	S	24	0.08	1.92	2300	49.3	2.6	30.5
D9225-24HB	B	24	0.16	3.84	3100	63	4	39.4
D9225-24MB	B	24	0.13	3.12	2700	59.5	3.7	37
D9225-24LB	B	24	0.08	1.92	2400	50.3	2.7	31.7

*U:Ultra H:High M:Middle L:Low D:

*S: Sleeve bearing B: Ball bearing

DC fans size 120X120X25mm PBT housing PBT Blade 7 blades



Insulating aterial centigrade： 10MΩ at 500VDC between lead and frame

Inner press： 1 min at 1500VAC/50-60HZ ,current〈5mA

Working temperature： -20ºC ~ 80ºC

Working pressure： 85V ~ 125V for 110V and 190V ~ 250V for 220V

Normal temperature working time: Ball bearing hour's five,oil bearing hour's three.

KLS P/N	Bearing Style	Voltage VDC	Current AMP	Power Watts	Speed RPM	Airflow CFM	AirPressure mmH_2O	Noise dBA
D12025-1-12HS	S	12	0.46	5.52	2500	100	6	43.3
D12025-1-12MS	S	12	0.29	3.84	2100	90	4.5	38
D12025-1-12LS	S	12	0.19	2.28	1800	75	3.3	35.5
D12025-1-12HB	B	12	0.46	5.52	2600	105	6.2	44.3
D12025-1-12MB	B	12	0.29	3.84	2200	92	4.7	39
D12025-1-12LB	B	12	0.19	2.28	1900	78	3.5	36.5
D12025-1-24HS	S	24	0.28	6.72	2500	100	6	43.3
D12025-1-24MS	S	24	0.16	3.84	2100	90	4.5	38
D12025-1-24LS	S	24	0.1	2.4	1800	75	3.3	35.5
D12025-1-24HB	B	24	0.28	6.72	2600	105	6.2	44.3
D12025-1-24MB	B	24	0.16	3.84	2200	92	4.7	39
D12025-1-24LB	B	24	0.1	2.4	1900	78	3.5	36.5

*U:Ultra H:High M:Middle L:Low D:

*S: Sleeve bearing B: Ball bearing

DC Fans

DC fans size 120X120X38mm PBT housing PBT Blade 7 blades



Insulating aterial centigrade： 10MΩ at 500VDC between lead and frame

Inner press： 1 min at 1500VAC/50-60HZ ,current〈5mA

Working temperature： -20ºC ~ 80ºC

Working pressure： 85V ~ 125V for 110V and 190V ~ 250V for 220V

Normal temperature working time: Ball bearing hour's five,oil bearing hour's three.

KLS P/N	Bearing Style	Voltage VDC	Current AMP	Power Watts	Speed RPM	Airflow CFM	AirPressure mmH_2O	Noise dBA
D12025-2-12HS	S	12	0.5	6	2300	100.5	5.3	38.8
D12025-2-12MS	S	12	0.35	4.2	1900	85	3.7	34
D12025-2-12LS	S	12	0.24	2.88	1700	68.3	3	30.9
D12025-2-12HB	B	12	0.5	6	2400	104.8	5.6	40.8
D12025-2-12MB	B	12	0.35	4.2	2000	90	4	36
D12025-2-12LB	B	12	0.24	2.88	1800	72.3	3.2	32.9
D12025-2-24HS	S	24	0.3	7.2	2300	100.5	5.3	38.8
D12025-2-24MS	S	24	0.2	4.8	1900	85	3.7	34
D12025-2-24HB	B	24	0.3	7.2	2400	104.8	5.6	40.8
D12025-2-24MB	B	24	0.2	4.8	2000	90	4	36
D12025-2-48HS	S	48	0.15	7.2	2300	100.5	5.3	38.8
D12025-2-48MS	S	48	0.12	6.76	1900	85	3.7	34
D12025-2-48LS	S	48	0.1	4.8	1700	68.3	3	30.9
D12025-2-48HB	B	48	0.15	7.2	2400	104.8	5.6	40.8
D12025-2-48MB	B	48	0.12	6.76	2000	90	4	36
D12025-2-48LB	B	48	0.1	4.8	1800	72.3	3.2	32.9

*U:Ultra H:High M:Middle L:Low D:

*S: Sleeve bearing B: Ball bearing

DC Fans

DC fans size 120X120X38mm Aluminum alloy housing PBT Blade 7 blades



Insulating aterial centigrade：	10MΩ at 500VDC between lead and frame
Inner press：	1 min at 1500VAC/50-60HZ ,current〈5mA
Working temperature：	-20ºC ~ 80ºC
Working pressure：	85V ~ 125V for 110V and 190V ~ 250V for 220V
Normal temperature working time:	Ball bearing hour's five,oil bearing hour's three.

KLS P/N	Bearing Style	Voltage VDC	Current	Power Watts	Speed	Airflow	AirPressure	Noise dBA
			AMP		RPM	CFM	mmH_2O	
D12025-3-12HS	S	12	0.5	6	2300	100.5	5.3	38.8
D12025-3-12MS	S	12	0.35	4.2	1900	85	3.7	34
D12025-3-12LS	S	12	0.24	2.88	1700	68.3	3	30.9
D12025-3-12HB	B	12	0.5	6	2400	104.8	5.6	40.8
D12025-3-12MB	B	12	0.35	4.2	2000	90	4	36
D12025-3-12LB	B	12	0.24	2.88	1800	72.3	3.2	32.9
D12025-3-24HS	S	24	0.3	7.2	2300	100.5	5.3	38.8
D12025-3-24MS	S	24	0.2	4.8	1900	85	3.7	34
D12025-3-24HB	B	24	0.3	7.2	2400	104.8	5.6	40.8
D12025-3-24MB	B	24	0.2	4.8	2000	90	4	36
D12025-3-48HS	S	48	0.15	7.2	2300	100.5	5.3	38.8
D12025-3-48MS	S	48	0.12	6.76	1900	85	3.7	34
D12025-3-48LS	S	48	0.1	4.8	1700	68.3	3	30.9
D12025-3-48HB	B	48	0.15	7.2	2400	104.8	5.6	40.8
D12025-3-48MB	B	48	0.12	6.76	2000	90	4	36
D12025-3-48LB	B	48	0.1	4.8	1800	72.3	3.2	32.9

*U:Ultra H:High M:Middle L:Low D:

*S: Sleeve bearing B: Ball bearing

DC Fans

DC fans size 172X150X50mm Aluminum alloy housing PBT Blade 5 blades



Insulating aterial centigrade：	10MΩ at 500VDC between lead and frame
Inner press：	1 min at 1500VAC/50-60HZ ,current〈5mA
Working temperature：	-20ºC ~ 80ºC
Working pressure：	85V ~ 125V for 110V and 190V ~ 250V for 220V
Normal temperature working time:	Ball bearing hour's five,oil bearing hour's three.

KLS P/N	Bearing Style	Voltage VDC	Current AMP	Power Watts	Speed RPM	Airflow CFM	AirPressure mmH_2O	Noise dBA
D15050-12US	S	12	2	24	3300	226.5	19.4	55.8
D15050-12HS	S	12	1.5	18	2900	201.5	14.4	51.8
D15050-12MS	S	12	0.9	10.8	2500	174	10.4	47
D15050-12LS	S	12	0.6	7.2	2100	145.5	8.6	41.9
D15050-12UB	B	12	2	24	3400	228	20.6	56.8
D15050-12HB	B	12	1.4	18	3000	203	15.5	52.6
D15050-12MB	B	12	0.85	10.8	2600	177.5	11.8	47.9
D15050-24LB	B	12	0.6	7.2	2200	148.5	9.4	42.8
D15050-24US	S	24	0.9	21.6	3300	226.5	19.4	55.8
D15050-24HS	S	24	0.65	16	2900	201.5	14.4	51.8
D15050-24MS	S	24	0.44	10.5	2500	174	10.4	47
D15050-24UB	B	24	0.9	21.6	3400	228	20.6	56.8
D15050-24HB	B	24	0.65	16	3000	203	15.5	52.6
D15050-24MB	B	24	0.44	10.5	2600	177.5	11.8	47.9
D15050-48US	S	48	0.5	24	3300	226.5	19.4	55.8
D15050-48HS	S	48	0.35	16.8	2900	201.5	14.4	51.8
D15050-48MS	S	48	0.25	12	2500	174	10.4	47
D15050-48LS	S	48	0.16	7.68	2100	145.5	8.6	41.9
D15050-48UB	B	48	0.5	24	3400	228	20.6	56.8
D15050-48HB	B	48	0.35	16.8	3000	203	15.5	52.6
D15050-48MB	B	48	0.25	12	2600	177.5	11.8	47.9
D15050-48LB	B	48	0.16	7.68	2200	148.5	9.4	42.8

*U:Ultra H:High M:Middle L:Low D:

*S: Sleeve bearing B: Ball bearing

DC Fans

DC fans size Φ172X51mm Aluminum alloy housing PBT Blade 5 blades



Insulating aterial centigrade：	10MΩ at 500VDC between lead and frame
Inner press：	1 min at 1500VAC/50-60HZ ,current〈5mA
Working temperature：	-20ºC ~ 80ºC
Working pressure：	85V ~ 125V for 110V and 190V ~ 250V for 220V
Normal temperature working time:	Ball bearing hour's five,oil bearing hour's three.

KLS P/N	Bearing Style	Voltage VDC	Current	Power Watts	Speed	Airflow	AirPressure	Noise dBA
			AMP		RPM	CFM	mmH_2O	
D17251-12US	S	12	2	24	3300	226.5	19.4	55.8
D17251-12HS	S	12	1.5	18	2900	201.5	14.4	51.8
D17251-12MS	S	12	0.9	10.8	2500	174	10.4	47
D17251-12LS	S	12	0.6	7.2	2100	145.5	8.6	41.9
D17251-12UB	B	12	2	24	3400	228	20.6	56.8
D17251-12HB	B	12	1.4	18	3000	203	15.5	52.6
D17251-12MB	B	12	0.85	10.8	2600	177.5	11.8	47.9
D17251-24LB	B	12	0.6	7.2	2200	148.5	9.4	42.8
D17251-24US	S	24	0.9	21.6	3300	226.5	19.4	55.8
D17251-24HS	S	24	0.65	16	2900	201.5	14.4	51.8
D17251-24MS	S	24	0.44	10.5	2500	174	10.4	47
D17251-24UB	B	24	0.9	21.6	3400	228	20.6	56.8
D17251-24HB	B	24	0.65	16	3000	203	15.5	52.6
D17251-24MB	B	24	0.44	10.5	2600	177.5	11.8	47.9
D17251-48US	S	48	0.5	24	3300	226.5	19.4	55.8
D17251-48HS	S	48	0.35	16.8	2900	201.5	14.4	51.8
D17251-48MS	S	48	0.25	12	2500	174	10.4	47
D17251-48LS	S	48	0.16	7.68	2100	145.5	8.6	41.9
D17251-48UB	B	48	0.5	24	3400	228	20.6	56.8
D17251-48HB	B	48	0.35	16.8	3000	203	15.5	52.6
D17251-48MB	B	48	0.25	12	2600	177.5	11.8	47.9
D17251-48LB	B	48	0.16	7.68	2200	148.5	9.4	42.8

*U:Ultra H:High M:Middle L:Low D:

*S: Sleeve bearing B: Ball bearing

DC Blower

DC blower size 50X50X15mm PBT housing PBT Blade



Insulating aterial centigrade： 10MΩ at 500VDC between lead and frame

Inner press： 1 min at 1500VAC/50-60HZ ,current〈5mA

Working temperature： -20ºC ~ 80ºC

Working pressure： 85V ~ 125V for 110V and 190V ~ 250V for 220V

Normal temperature working time: Ball bearing hour's five,oil bearing hour's three.

KLS P/N	Bearing Style	Voltage VDC	Current AMP	Power Watts	Speed RPM	Airflow CFM	AirPressure mmH_2O	Noise dBA
5015-12HS	S	12	0.13	1.56	5000	4.4	5.6	29.9
5015-12MS	S	12	0.09	1.08	3900	3.5	4.2	25.8
5015-12LS	S	12	0.06	0.72	3000	2.5	3.4	21.5
5015-12HB	B	12	0.13	1.56	5000	4.4	5.6	29.9
5015-12MB	B	12	0.09	1.08	3900	3.5	4.2	25.8
5015-12LB	B	12	0.06	0.72	3000	2.5	3.4	21.5

*U:Ultra H:High M:Middle L:Low D:

*S: Sleeve bearing B: Ball bearing

DC blower size 75X75X30cm PBT housing PBT Blade



Insulating aterial centigrade： 10MΩ at 500VDC between lead and frame

Inner press： 1 min at 1500VAC/50-60HZ ,current〈5mA

Working temperature： -20ºC ~ 80ºC

Working pressure： 85V ~ 125V for 110V and 190V ~ 250V for 220V

Normal temperature working time: Ball bearing hour's five,oil bearing hour's three.

KLS P/N	Bearing Style	Voltage VDC	Current AMP	Power Watts	Speed RPM	Airflow CFM	AirPressure mmH_2O	Noise dBA
7530-12HS	S	12	0.25	3	3000	10.5	9.6	35.9
7530-12MS	S	12	0.18	2.16	2500	8.5	6.2	30.8
7530-12LS	S	12	0.12	1.44	2000	7.3	4.1	28.5
7530-12HB	B	12	0.25	3	3000	10.5	9.6	35.9
7530-12MB	B	12	0.18	2.16	2500	8.5	6.2	30.8
7530-12LB	B	12	0.12	1.44	2000	7.3	4.1	28.5

*U:Ultra H:High M:Middle L:Low D:

*S: Sleeve bearing B: Ball bearing

DC Blower

DC blower size 97X97X33mm PBT housing PBT Blade



Insulating aterial centigrade： 10MΩ at 500VDC between lead and frame

Inner press： 1 min at 1500VAC/50-60HZ ,current〈5mA

Working temperature： -20ºC ~ 80ºC

Working pressure： 85V ~ 125V for 110V and 190V ~ 250V for 220V

Normal temperature working time: Ball bearing hour's five,oil bearing hour's three.

KLS P/N	Bearing Style	Voltage VDC	Current AMP	Power Watts	Speed RPM	Airflow CFM	AirPressure mmH_2O	Noise dBA
9733-12HS	S	12	0.8	9.6	3300	23.5	21.4	48.9
9733-12MS	S	12	0.5	6	2800	18.5	17.5	45.8
9733-12LS	S	12	0.3	3.6	2200	13.3	10	41.5
9733-12HB	B	12	0.8	9.6	3300	23.5	21.4	48.9
9733-12MB	B	12	0.5	6	2800	18.5	17.5	45.8
9733-12LB	B	12	0.3	3.6	2200	13.3	10	41.5
9733-24HS	S	24	0.55	13.2	3300	23.5	21.4	48.9
9733-24MS	S	24	0.35	8.4	2800	18.5	17.5	45.8
9733-24LS	S	24	0.2	4.8	2200	13.3	10	41.5
9733-24HB	B	24	0.55	13.2	3300	23.5	21.4	48.9
9733-24MB	B	24	0.35	8.4	2800	18.5	17.5	45.8
9733-24LB	B	24	0.2	4.8	2200	13.3	10	41.5

*U:Ultra H:High M:Middle L:Low D:

*S: Sleeve bearing B: Ball bearing

DC blower size 120X120X32mm PBT housing PBT Blade

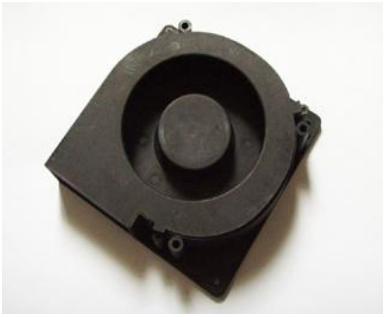

Insulating aterial centigrade： 10MΩ at 500VDC between lead and frame

Inner press： 1 min at 1500VAC/50-60HZ ,current〈5mA

Working temperature： -20ºC ~ 80ºC

Working pressure： 85V ~ 125V for 110V and 190V ~ 250V for 220V

Normal temperature working time: Ball bearing hour's five,oil bearing hour's three.

KLS P/N	Bearing Style	Voltage VDC	Current AMP	Power Watts	Speed RPM	Airflow CFM	AirPressure mmH_2O	Noise dBA
12032-12HS	S	12	0.85	10.2	2100	31.5	25.6	45.9
12032-12MS	S	12	0.6	7.2	1800	28.5	18.2	43.8
12032-12LS	S	12	0.5	6	1500	25.3	13.4	40.5
12032-12HB	B	12	0.85	10.2	2100	31.5	25.6	45.9
12032-12MB	B	12	0.6	7.2	1800	28.5	18.2	43.8
12032-12LB	B	12	0.5	6	1500	25.3	13.4	40.5
12032-24HS	S	24	0.5	12	2100	31.5	25.6	45.9
12032-24MS	S	24	0.35	8.4	1800	28.5	18.2	43.8
12032-24LS	S	24	0.27	6.5	1500	25.3	13.4	40.5
12032-24HB	B	24	0.5	12	2100	31.5	25.6	45.9
12032-24MB	B	24	0.35	8.4	1800	28.5	18.2	43.8
12032-24LB	B	24	0.27	6.5	1500	25.3	13.4	40.5

*U:Ultra H:High M:Middle L:Low D:

*S: Sleeve bearing B: Ball bearing

CPU Cooler

AC fans size 40X40X10mm PBT housing PBT Blade 11 blades

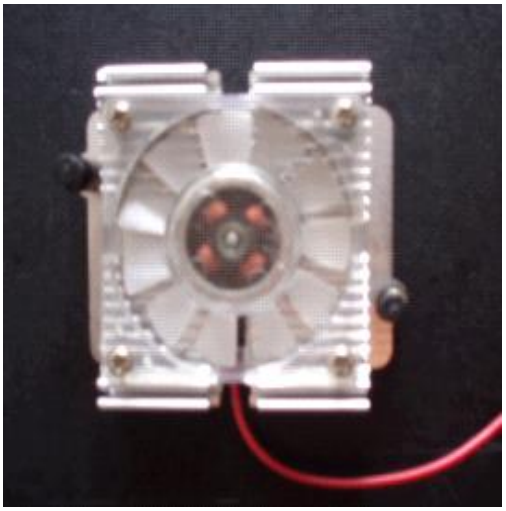

Housing： PC Engineering Plastics
Size： 40*40*10mm
Blade： PC Engineering Plastics
Packing： 200PCS/CTN
MEAS： 28*28*46cm
G.W： 10kgs N.W：9kgs

Radiator material: Aluminum profile
HEATSINK: 83mm×72mm×35mm
FAN SIZE: 40mm×40mm×10mm
ROTATION SPEED: 5000RPM±10%
RATED VOLTAGE:12V RATED CURRENT: 0.08A
NOISE: 30.5dB SERVICE LIFE: 30000hrs
BEARING MODE: Sleeve bearing,Ball bearing.

CPU Cooler size 50X50X10mm PBT housing PBT Blade 7 blades



Housing： PBT Engineering Plastics
Size： 50*50*10mm
Blade： PBT Engineering Plastics
Packing： 200PCS/CTN
MEAS： 34*33*33cm
G.W： 15kgs N.W：14kgs

Radiator material: Aluminum profile
HEATSINK: 51.5mm×50mm×24mm
FAN SIZE: 50mm×50mm×10mm
ROTATION SPEED: 3500RPM±10%
RATED VOLTAGE: 12V RATED CURRENT: 0.09A
NOISE: 26.6dB SERVICE LIFE: 30000hrs
BEARING MODE: Sleeve bearing,Ball bearing.

CPU Cooler

CPU Cooler size 50X50X15mm PBT housing PBT Blade 7 blades

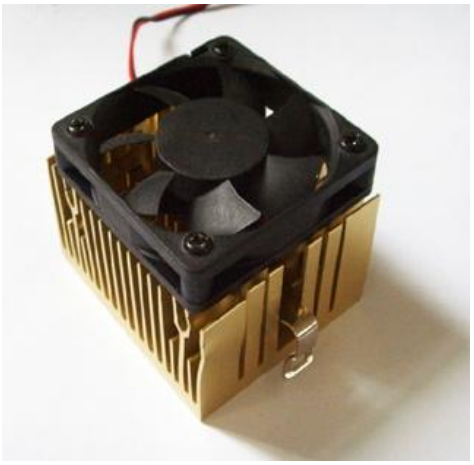

Housing： PBT Engineering Plastics
Size： 50*50*15mm
Blade： PBT Engineering Plastics
Packing： 200PCS/CTN
MEAS： 36*33*36cm
G.W： 16kgs N.W：15kgs

Radiator material: Aluminum profile
HEATSINK: 57mm×50mm×32mm
FAN SIZE: 50mm×50mm×15mm
ROTATION SPEED: 3500RPM±10%
RATED VOLTAGE: 12V RATED CURRENT: 0.09A
NOISE: 26.6dB SERVICE LIFE: 30000hrs
BEARING MODE: Sleeve bearing,Ball bearing.

CPU Cooler size 60X60X10mm PBT housing PBT Blade 7 blades

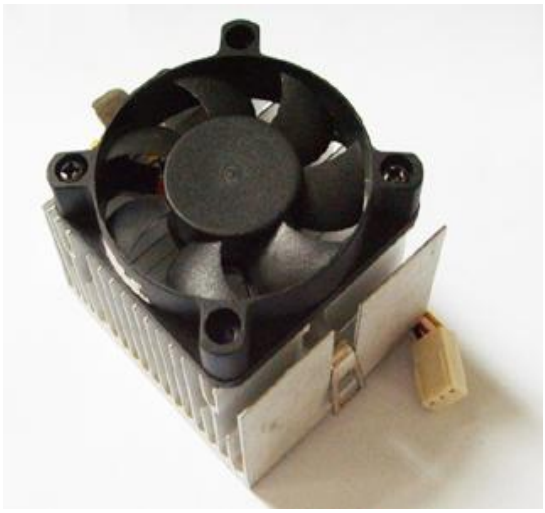

Housing： PBT Engineering Plastics
Size： 60*60*10mm
Blade： PBT Engineering Plastics
Packing： 100PCS/CTN
MEAS： 28*28*46cm
G.W： 10kgs N.W：9kgs

Aplicable CPU: AMD / PENTIUM 3 1.0GHz
Radiator material: Aluminum profile
HEATSINK: 60mm×60mm×25mm
FAN SIZE: 60mm×60mm×10mm
ROTATION SPEED: 3500RPM±10%
RATED VOLTAGE: 12V RATED CURRENT: 0.11A
NOISE: 28.5dB SERVICE LIFE: 30000hrs
BEARING MODE: Sleeve bearing,Ball bearing.

Fans Accessory

Metal Finger Guard Fans Accessory size 40mmX40mm

Material : Metal

Size : 40mm*40mm

Thickness:4.4mm



9-1-6-28

Metal Finger Guard Fans Accessory size 50mmX50mm

Material : Metal

Size : 50mm*50mm

Thickness:4.4mm



9-1-6-1

Metal Finger Guard Fans Accessory size 60mmX60mm

Material : Metal

Size : 60mm*60mm

Thickness:4.4mm



9-1-6-2

Metal Finger Guard Fans Accessory size 70mmX70mm

Material : Metal

Size : 70mm*70mm

Thickness:4.5mm



9-1-6-3

Fans Accessory

Metal Finger Guard Fans Accessory size 80mmX80mm

Material : Metal

Size : 80mm*80mm

Thickness:4.5mm



9-1-6-4

Metal Finger Guard Fans Accessory size 92mmX92mm

Material : Metal

Size : 92mm*92mm

Thickness:4.5mm



9-1-6-5

Metal Finger Guard Fans Accessory size 110mmX110mm

Material : Metal

Size : 110mm*110mm

Thickness:4.5mm



9-1-6-6

Metal Finger Guard Fans Accessory size 120mmX120mm

Material : Metal

Size : 120mm*120mm

Thickness:4.5mm



9-1-6-7

Fans Accessory

Metal Finger Guard Fans Accessory size 135mmX135mm

Material : Metal

Size : 135mm*135mm

Thickness:4.5mm



9-1-6-8

Metal Finger Guard Fans Accessory size 145mmX145mm

Material : Metal

Size : 145mm*145mm

Thickness: 4.5mm



9-1-6-9

Metal Finger Guard Fans Accessory size 162mmX162mm

Material : Metal

Size : 162mm*162mm

Thickness: 4.5mm



9-1-6-10

Metal Finger Guard Fans Accessory size 172mmX172mm

Material : Metal

Size : 172mm*172mm

Thickness: 4.5mm



9-1-6-11

Fans Accessory

Metal Finger Guard Fans Accessory size 180mmX180mm

Material : Metal

Size : 180mm*180mm

Thickness: 4.5mm



9-1-6-12

Metal Finger Guard Fans Accessory size 220mmX220mm

Material : Metal

Size : 220mm*220mm

Thickness: 4.5mm



9-1-6-13

Plastic Finger Guard Fans Accessory size 80mmX80mm

Material : Plastic

Size : 80mm*80mm



9-1-6-14

Plastic Finger Guard Fans Accessory size 92mmX92mm

Material : Plastic

Size : 80mm*80mm



9-1-6-15

Fans Accessory

Plastic Finger Guard Fans Accessory size 110mmX110mm

Material : Plastic

Size : 110mm*110mm



9-1-6-16

Plastic Finger Guard Fans Accessory size 120mmX120mm

Material : Plastic

Size : 120mm*120mm



9-1-6-17

Plastic Finger Guard Fans Accessory size 120mmX120mm

Material : Plastic

Size : 120mm*120mm



9-1-6-18

Plastic Finger Guard Fans Accessory size 120mmX120mm

Material : Plastic

Size : 120mm*120mm



9-1-6-19

Fans Accessory

Plastic Guard with filter Fans Accessory size 60mmX60mm

Material : Plastic

Size : 60mm*60mm



9-1-6-20

Plastic Guard with filter Fans Accessory size 70mmX70mm

Material : Plastic

Size : 70mm*70mm



9-1-6-21

Plastic Guard with filter Fans Accessory size 80mmX80mm

Material : Plastic

Size : 80mm*80mm



9-1-6-22

Plastic Guard with filter Fans Accessory size 92mmX92mm

Material : Plastic

Size : 92mm*92mm



9-1-6-23

Fans Accessory

Plastic Guard with filter Fans Accessory size 110mmX110mm

Material : Plastic

Size : 110mm*110mm



9-1-6-24

Plastic Guard with filter Fans Accessory size 120mmX120mm

Material : Plastic

Size : 120mm*120mm



9-1-6-25

Plastic Guard with filter Fans Accessory size 175mmX150mm

Material : Plastic

Size : 175mm*150mm



9-1-6-26

Plastic Guard with filter Fans Accessory size 172mmX172mm

Material : Plastic

Size : 172mm*172mm



9-1-6-27

Motors

Coreless Motor Dia. 4mmx8mm Series

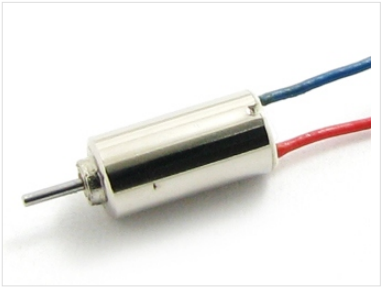

Typical Applications

- Mobile telephone
- Motor Toy

Motor Outline

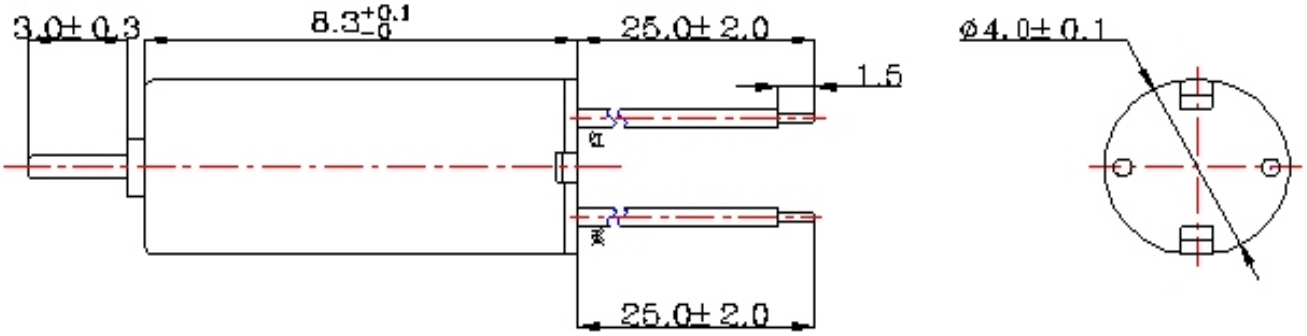

Part No. And Data:

MODEL	VOLTAGE	NO LOAD		LOAD		STALL
	NOMINAL	SPEED	CURRENT	SPEED	CURRENT	CURRENT
	V	r/min	A	r/min	A	A
0408-3884	3	54000	0.09	12400	0.18	0.22
0408-3595	3.7	66200	0.07	17300	0.18	0.23
0408-4091	3.5	70000	0.09	20100	0.22	0.28

Motors

Coreless Motor Dia. 4mmx12mm Series

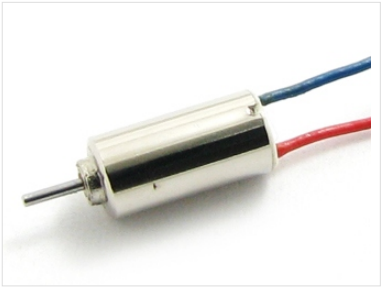

Typical Applications

- Mobile telephone
- Motor Toy
- Aviation Aerial Model

Motor Outline

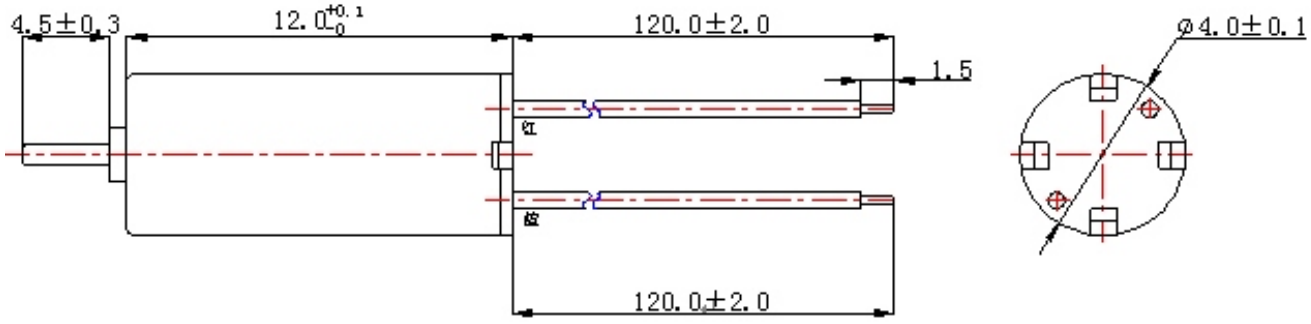

Part No. And Data:

MODEL	VOLTAGE	NO LOAD		Load		STALL
	NOMINAL	SPEED	CURRENT	SPEED	CURRENT	CURRENT
	V	r/min	A	r/min	A	A
0412-5065	3	52600	0.05	22800	0.22	0.35
0412-4.95	3	35600	0.05	11900	0.14	0.18
0412-6543	3	76500	0.07	34500	0.45	0.87

Motors

Coreless Motor Dia. 5mmx14mm Series



Typical Applications

- Motor Toothbrus
- Remedy Apparatus
- Micro Electrical Appliances
- Aviation Aerial Model
- Motor Toy

Motor Outline

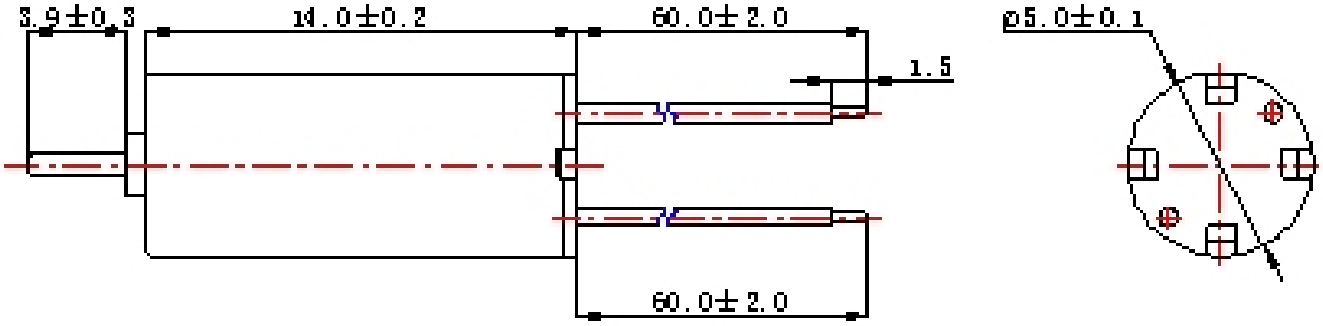

Part No. And Data:

MODEL	VOLTAGE	NO LOAD		Load		STALL
	NOMINAL	SPEED	CURRENT	SPEED	CURRENT	CURRENT
	V	r/min	A	r/min	A	A
0514NB-8543	3	51900	0.05	27200	0.49	0.94

Motors

Coreless Motor Dia. 6mmx10mm Series

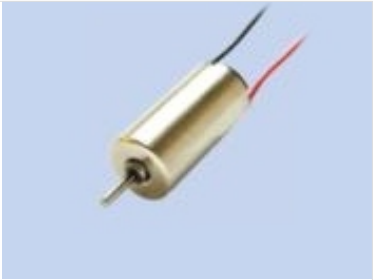

Typical Applications

- Motor Toothbrus
- Remedy Apparatus
- Micro Electrical Appliances
- Aviation Aerial Model

Motor Outline

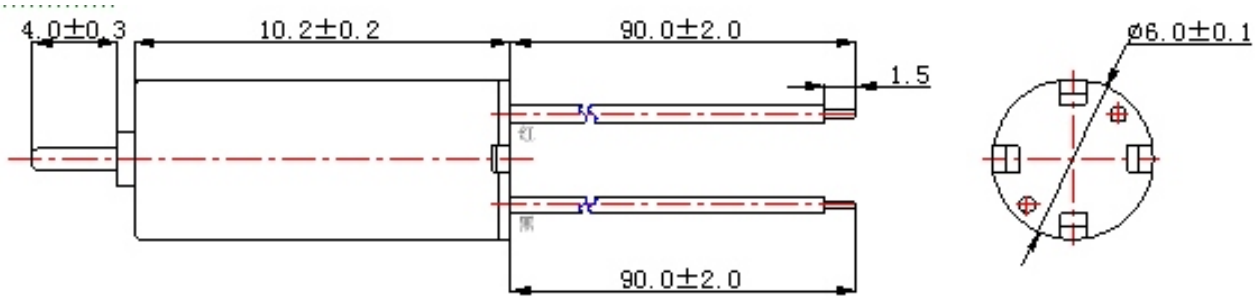

Part No. And Data:

MODEL	VOLTAGE	NO LOAD		Load		STALL
	NOMINAL	SPEED	CURRENT	SPEED	CURRENT	CURRENT
	V	r/min	A	r/min	A	A
0610-5539	3.7	52600	0.07	32500	0.27	0.56
0610-6035	3.7	61500	0.08	22800	0.42	0.68

Motors

Coreless Motor Dia. 6mmx12mm Series

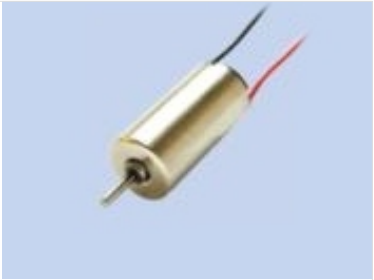

Typical Applications

- Motor Toothbrus
- Remedy Apparatus
- Micro Electrical Appliances
- Aviation Aerial Model

Motor Outline

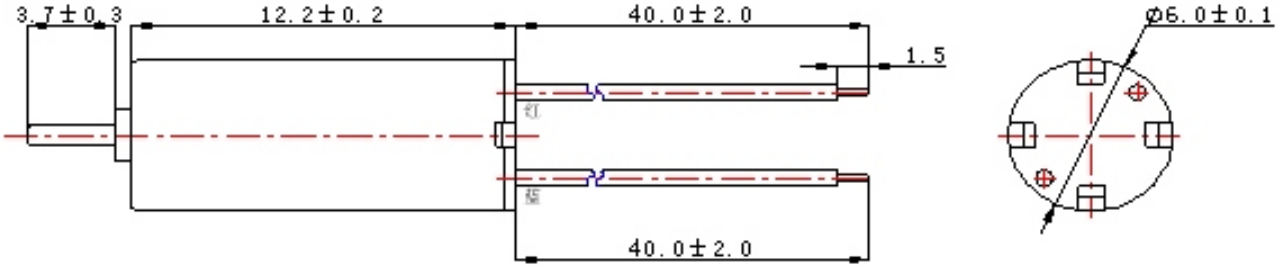

Part No. And Data:

MODEL	VOLTAGE	NO LOAD		Load		STALL
	NOMINAL	SPEED	CURRENT	SPEED	CURRENT	CURRENT
	V	r/min	A	r/min	A	A
0612-6538	3	31700	0.06	25100	0.16	0.52
0612-6031	3.7	53100	0.06	23600	0.33	0.60
0612-7529	3.4	48600	0.05	26800	0.45	0.90

Motors

Coreless Motor Dia. 6mmx14mm Series

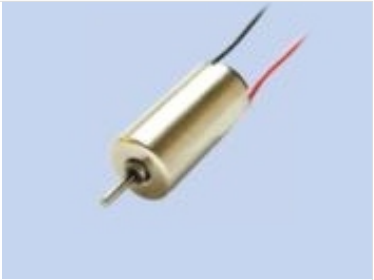

Typical Applications

- Motor Toothbrus
- Remedy Apparatus
- Micro Electrical Appliances
- Aviation Aerial Model

Motor Outline

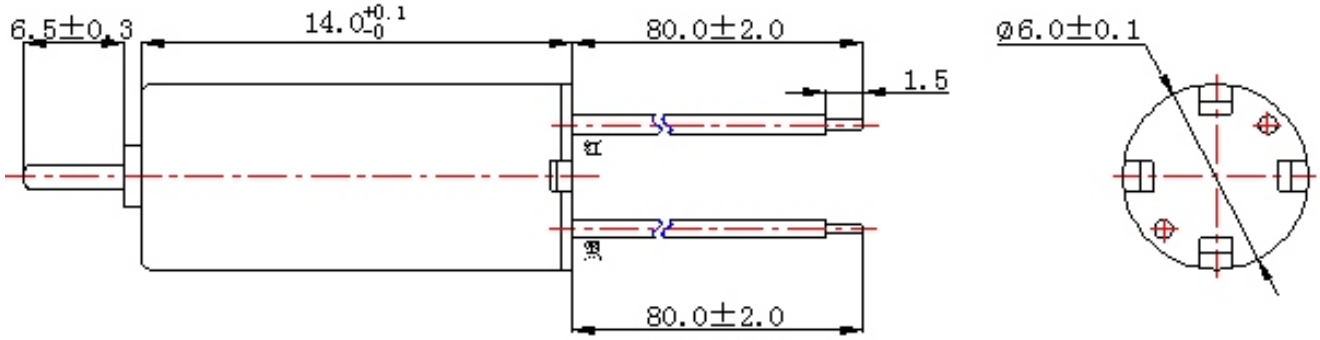

Part No. And Data:

MODEL	VOLTAGE	NO LOAD		Load		STALL
	NOMINAL	SPEED	CURRENT	SPEED	CURRENT	CURRENT
	V	r/min	A	r/min	A	A
0614-9029	3.7	46800	0.07	3100	0.45	1.3
0614-9026	3.7	50400	0.08	20700	0.85	1.5
0614-9035	3.7	38000	0.07	19500	0.52	1.2

Motors

Coreless Motor Dia. 6mmx15mm Series

Typical Applications

- Motor Toothbrus
- Remedy Apparatus
- Micro Electrical Appliances
- Aviation Aerial Model

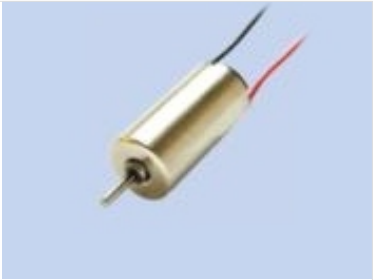

Motor Outline

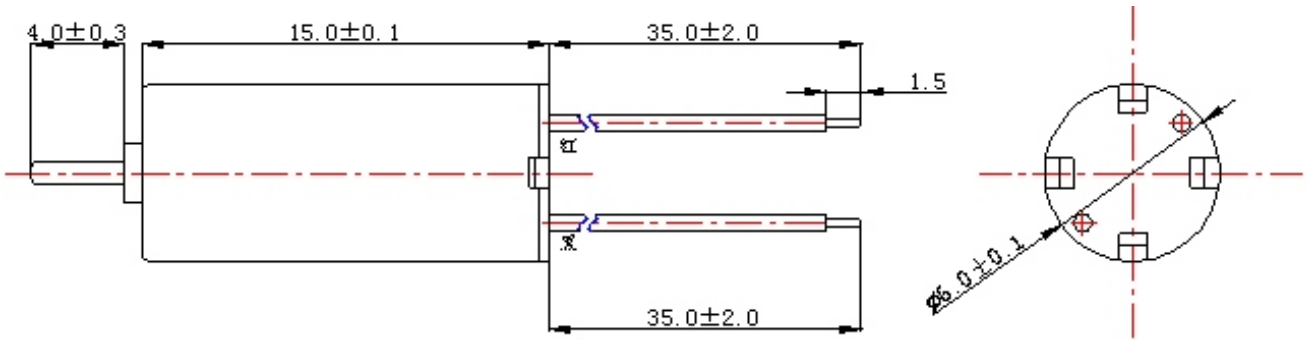

Part No. And Data:

MODEL	VOLTAGE	NO LOAD		Load		STALL
	NOMINAL	SPEED	CURRENT	SPEED	CURRENT	CURRENT
	V	r/min	A	r/min	A	A
0615-9027	3.4	42900	0.08	18700	0.6	1.12
0615-8522	2.4	35500	0.08	16500	0.51	0.87

Motors

Coreless Motor Dia. 7mmx14m Series



Typical Applications

- Motor Toothbrus
- Motor Toy
- Aviation Aerial Model

Motor Outline

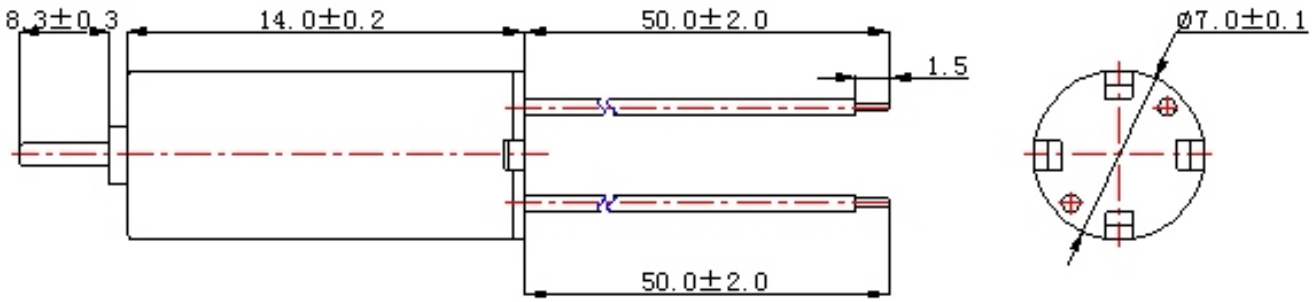

Part No. And Data:

MODEL	VOLTAGE	NO LOAD		Load		STALL
	NOMINAL	SPEED	CURRENT	SPEED	CURRENT	CURRENT
	V	r/min	A	r/min	A	A
0714NB-7023	3.4	48000	0.07	31100	0.53	1.41

Motors

Coreless Motor Dia. 7mmx17mm Series

Typical Applications

- Motor Toothbrus
- Remedy Apparatus
- Micro Electrical Appliances
- Aviation Aerial Model

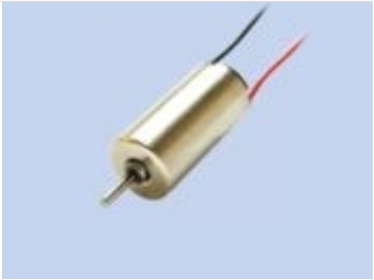

Motor Outline

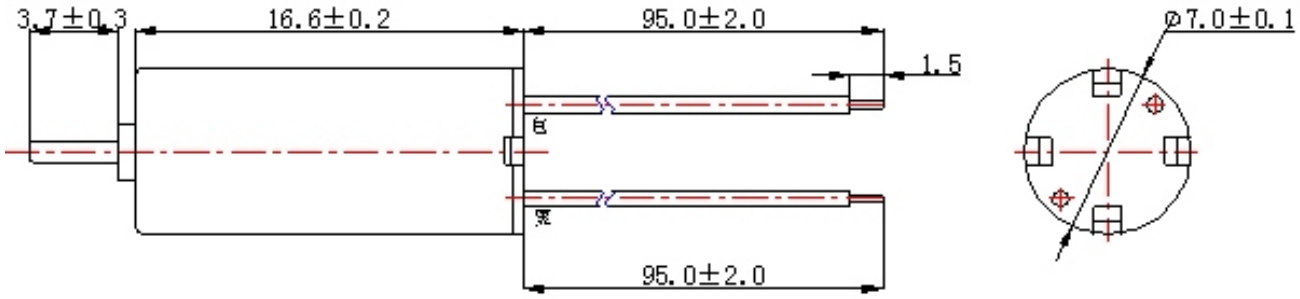

Part No. And Data:

MODEL	VOLTAGE	NO LOAD		Load		STALL
	NOMINAL	SPEED	CURRENT	SPEED	CURRENT	CURRENT
	V	r/min	A	r/min	A	A
0717-11023	3.7	43000	0.08	1620	0.57	1.78
0717-8022	3.7	42000	0.09	2850	0.60	2.30
0717-8519	3.7	45100	0.11	3330	0.78	2.70

Motors

Coreless Motor Dia. 7mmx24mm Series

Typical Applications

- Motor Toothbrus



Motor Outline

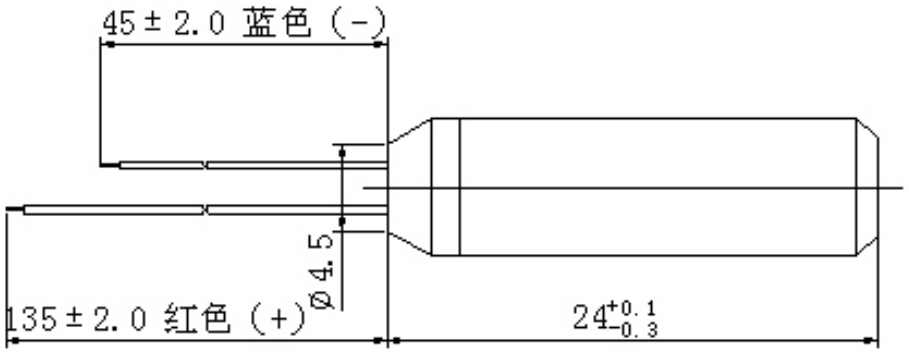

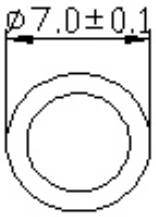

Part No. And Data:

MODEL	VOLTAGE	NO LOAD		Load		STALL
	NOMINAL	SPEED	CURRENT	SPEED	CURRENT	CURRENT
	V	r/min	A	r/min	A	A
0724-F529	1.5	20000	0.05	11300	0.22	0.35

Radiator, Heat sink

Profile Radiator:1.0~45.0 cm

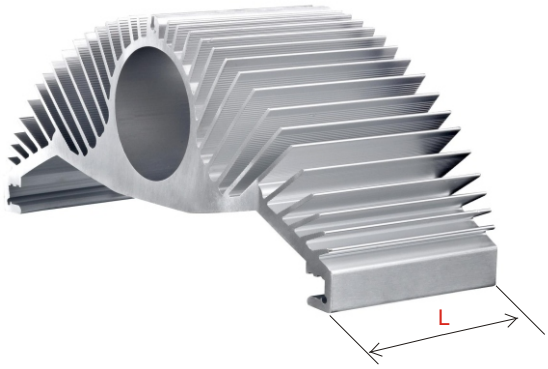

How to order :

Code No.	Length of "L"	Screw style	Surface treatment

Screw styles:

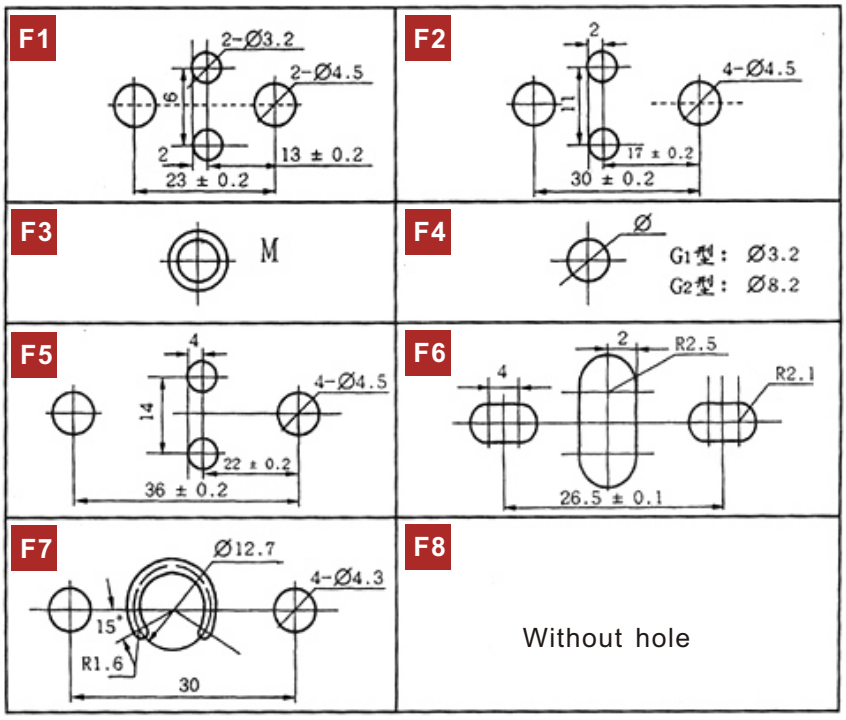

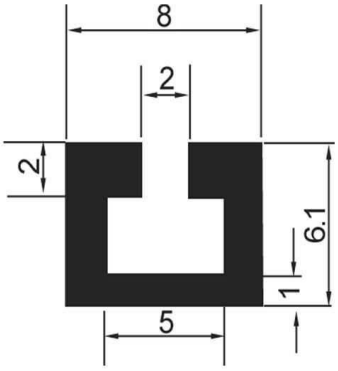

9-3-1-1-001

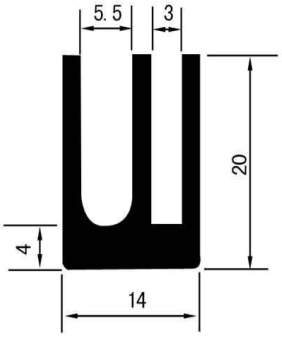

9-3-1-1-009

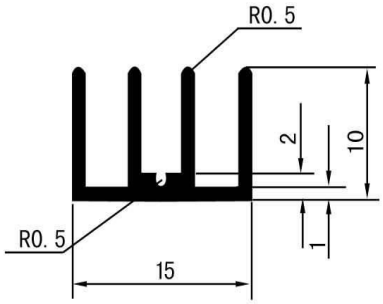

9-3-1-1-017

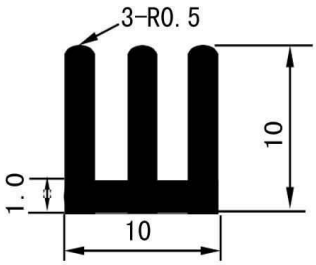

9-3-1-1-002

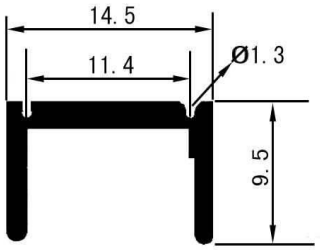

9-3-1-1-010

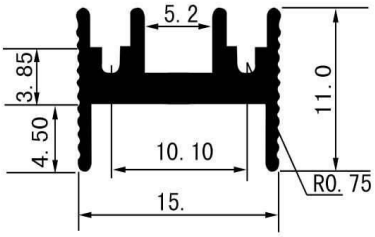

9-3-1-1-018

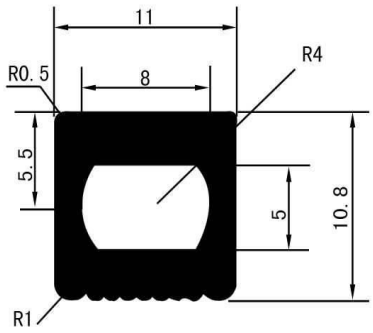

9-3-1-1-003

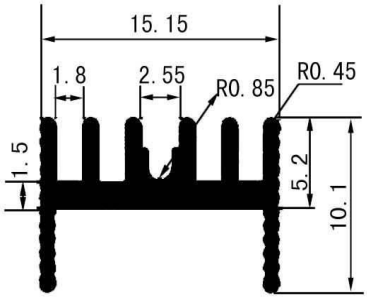

9-3-1-1-011

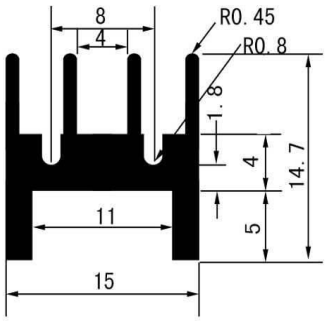

9-3-1-1-019

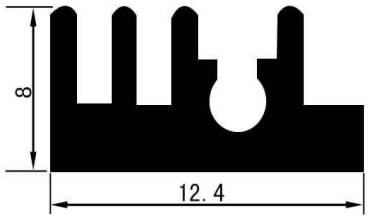

9-3-1-1-004

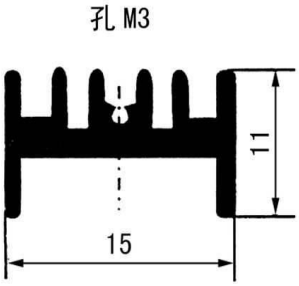

9-3-1-1-012

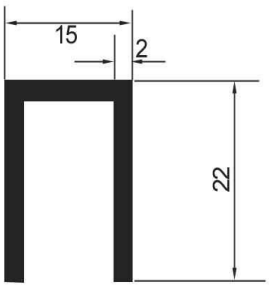

9-3-1-1-020

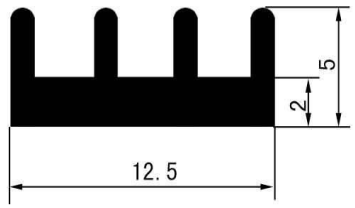

9-3-1-1-005

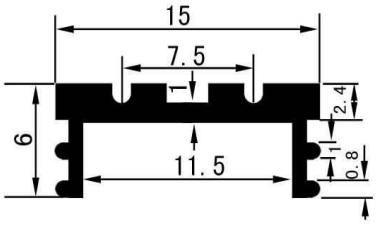

9-3-1-1-013

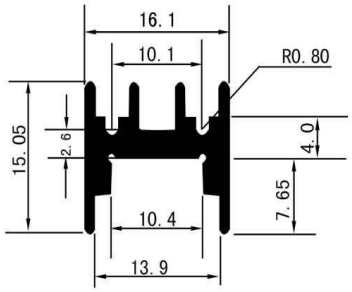

9-3-1-1-021

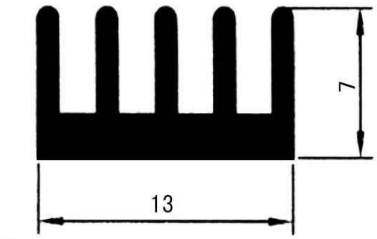

9-3-1-1-006

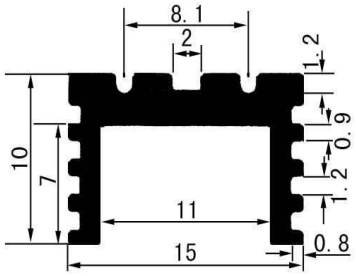

9-3-1-1-014

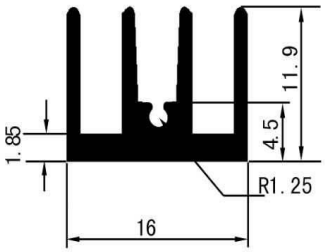

9-3-1-1-022

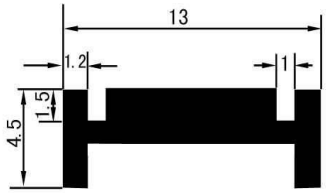

9-3-1-1-007

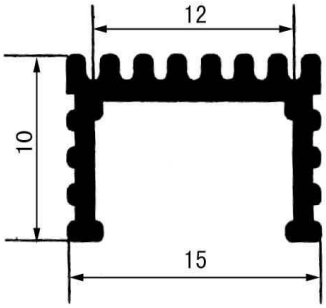

9-3-1-1-015

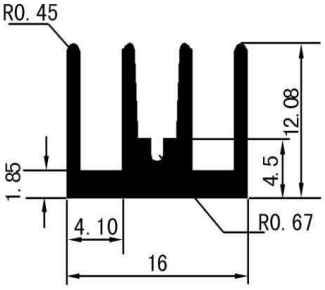

9-3-1-1-023

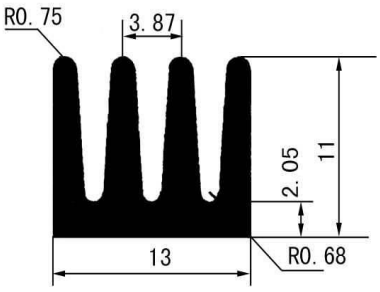

9-3-1-1-008

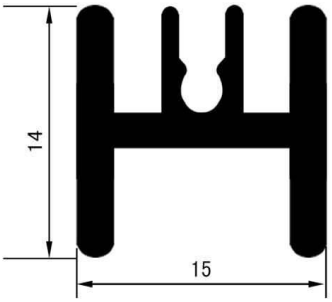

9-3-1-1-016

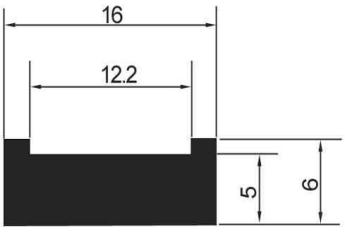

9-3-1-1-024

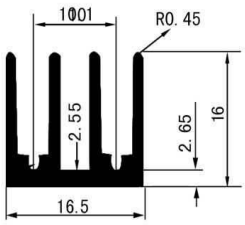

9-3-1-1-025

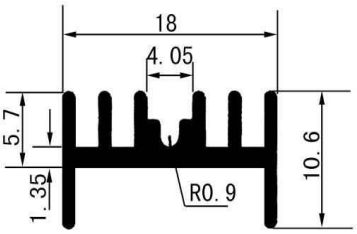

9-3-1-1-033

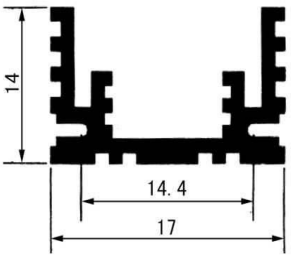

9-3-1-1-029

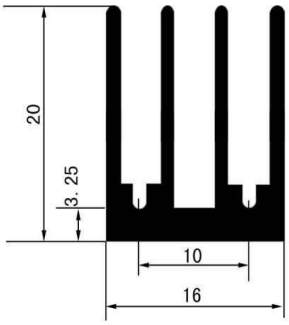

9-3-1-1-026

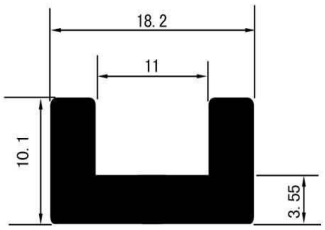

9-3-1-1-034

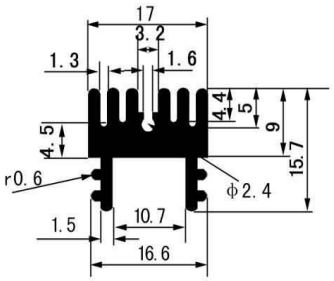

9-3-1-1-030

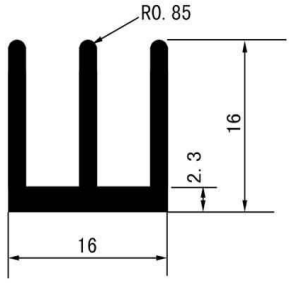

9-3-1-1-027

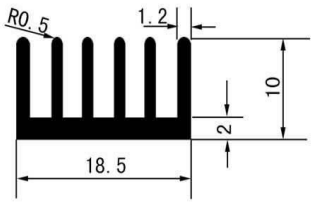

9-3-1-1-035

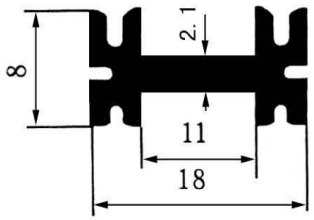

9-3-1-1-031

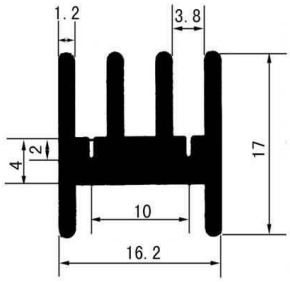

9-3-1-1-028

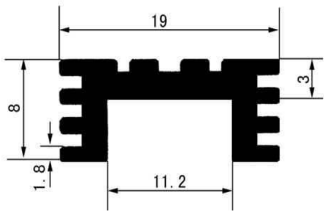

9-3-1-1-036

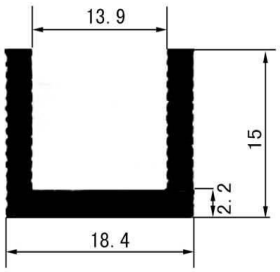

9-3-1-1-032

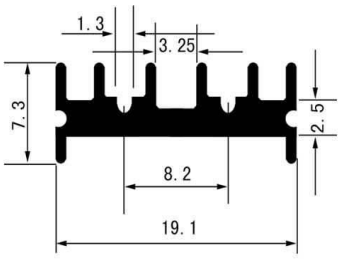

9-3-1-1-037

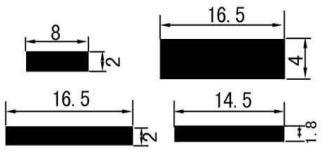

9-3-1-1-038

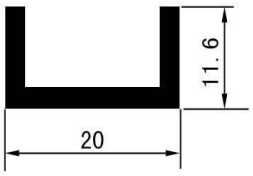

9-3-1-2-001

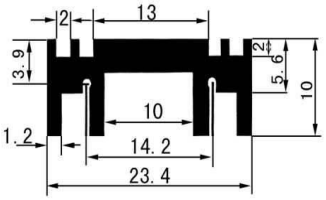

9-3-1-2-009

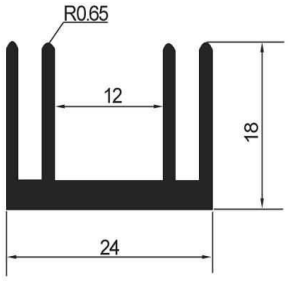

9-3-1-2-017

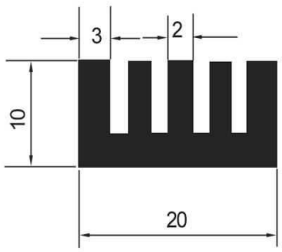

9-3-1-2-002

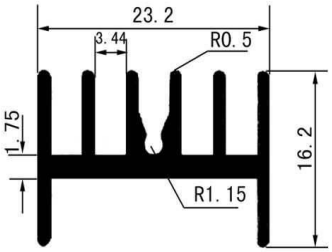

9-3-1-2-010

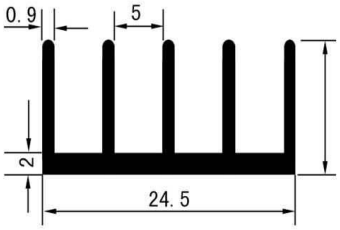

9-3-1-2-018

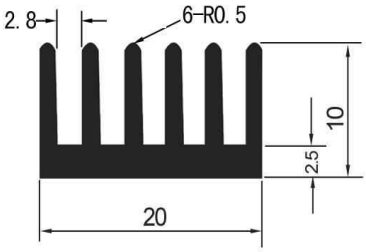

9-3-1-2-003

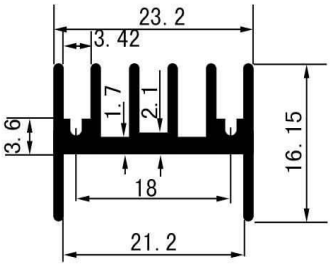

9-3-1-2-011

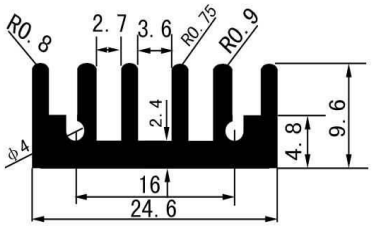

9-3-1-2-019

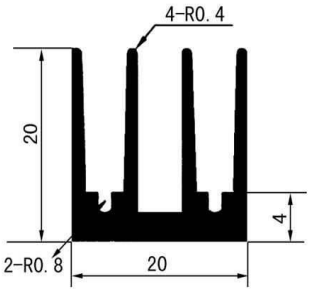

9-3-1-2-004

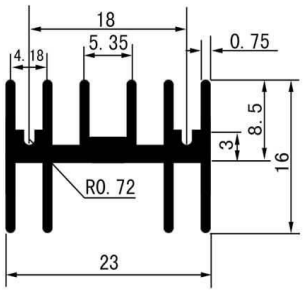

9-3-1-2-012

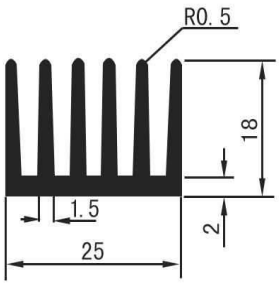

9-3-1-2-020

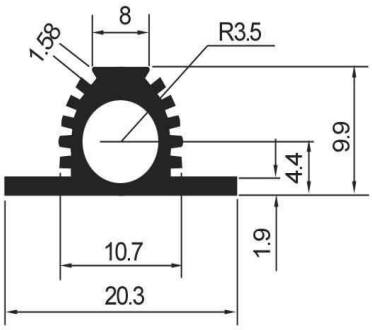

9-3-1-2-005

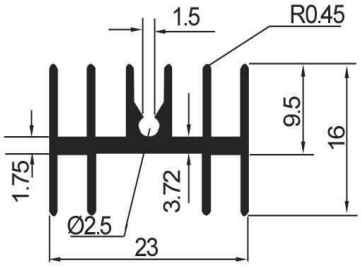

9-3-1-2-013

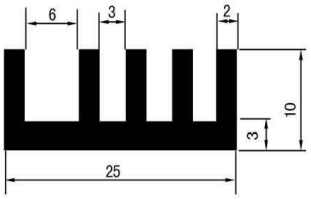

9-3-1-2-021

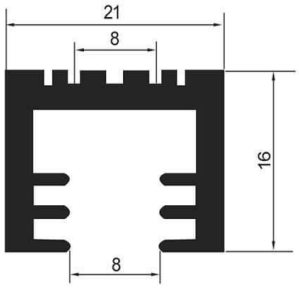

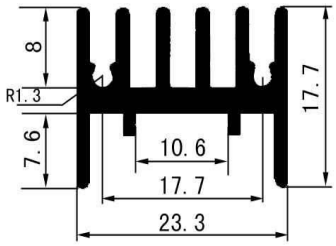

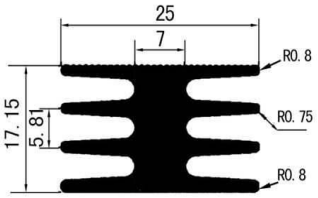

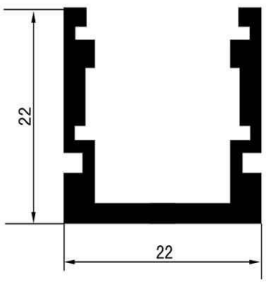

9-3-1-2-007

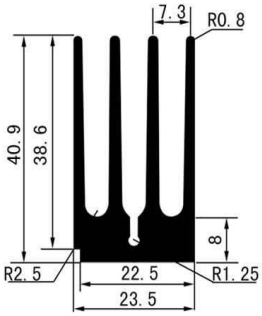

9-3-1-2-015

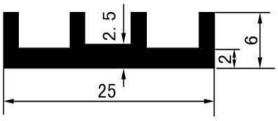

9-3-1-2-023

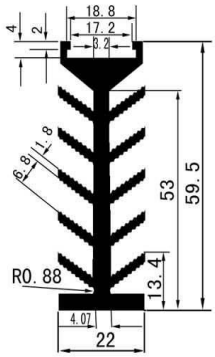

9-3-1-2-008

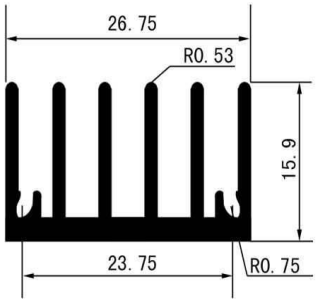

9-3-1-2-016

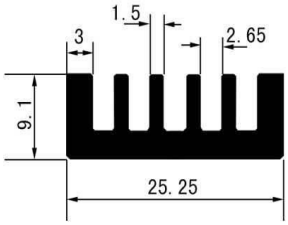

9-3-1-2-024

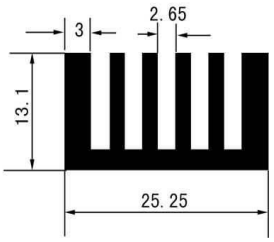

9-3-1-2-025

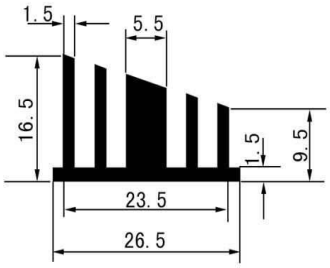

9-3-1-2-033

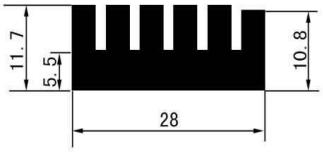

9-3-1-2-041

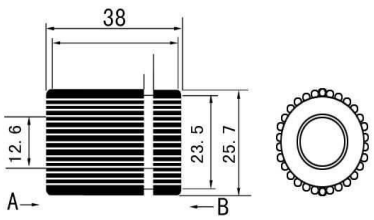

9-3-1-2-026

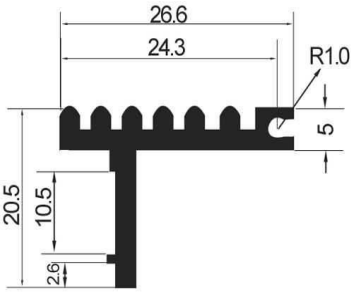

9-3-1-2-034

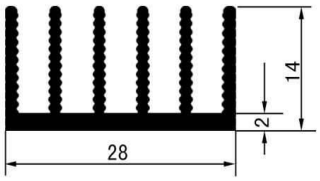

9-3-1-2-042

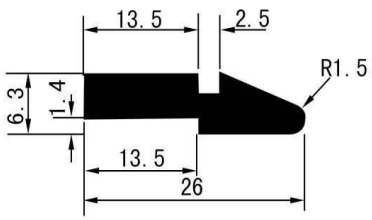

9-3-1-2-027

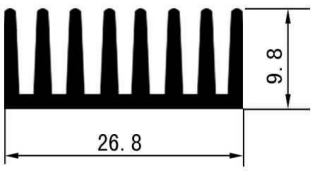

9-3-1-2-035

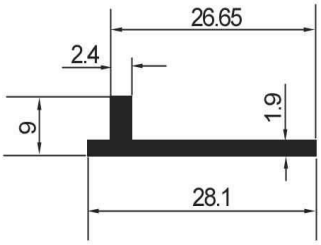

9-3-1-2-043

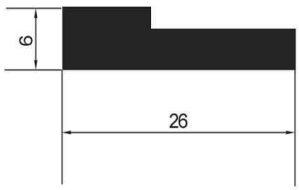

9-3-1-2-028

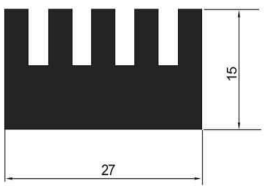

9-3-1-2-036

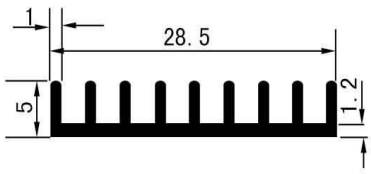

9-3-1-2-044

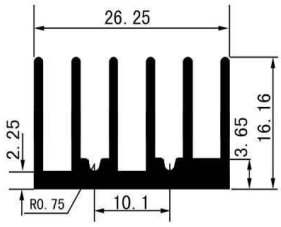

9-3-1-2-029

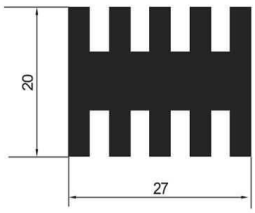

9-3-1-2-037

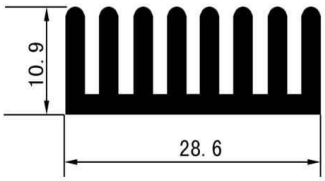

9-3-1-2-045

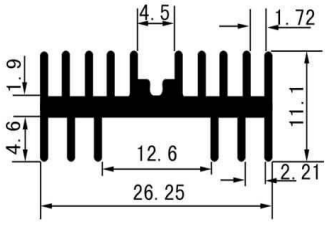

9-3-1-2-030

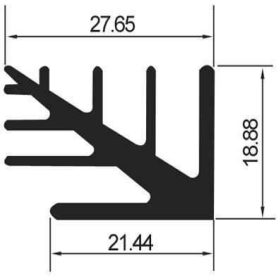

9-3-1-2-038

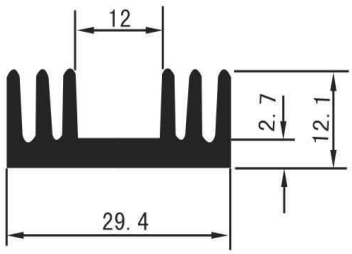

9-3-1-2-046

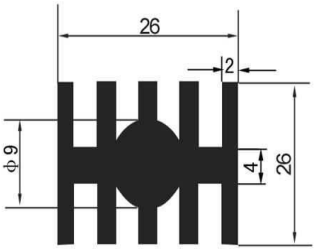

9-3-1-2-031

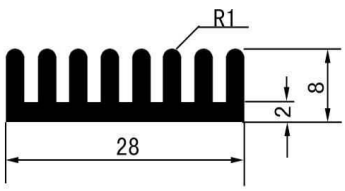

9-3-1-2-039

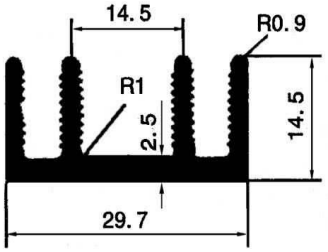

9-3-1-2-047

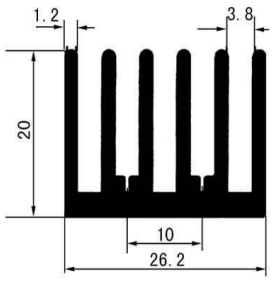

9-3-1-2-032

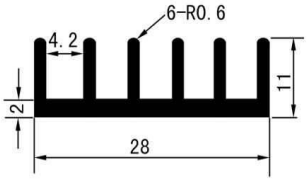

9-3-1-2-040

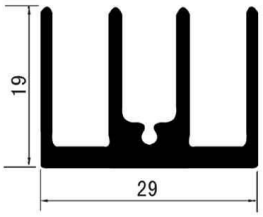

9-3-1-2-048

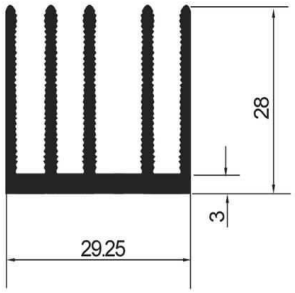

9-3-1-2-049



9-3-1-2-050

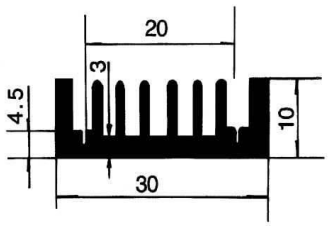

9-3-1-3-001

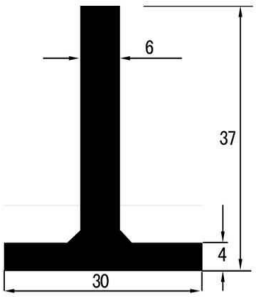

9-3-1-3-009

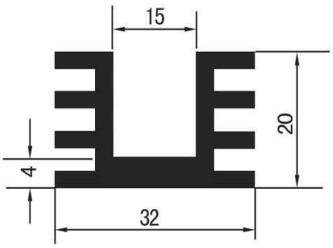

9-3-1-3-017

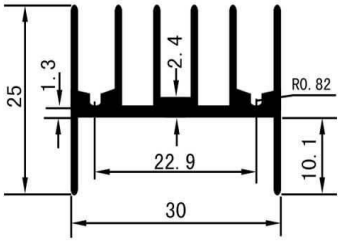

9-3-1-3-002

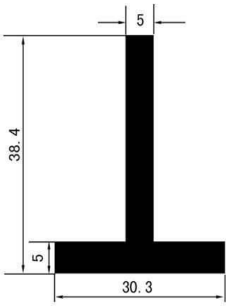

9-3-1-3-010

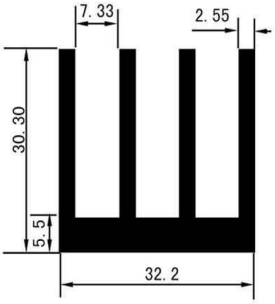

9-3-1-3-018

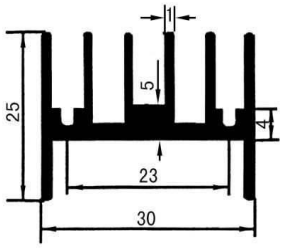

9-3-1-3-003

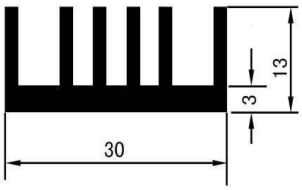

9-3-1-3-011

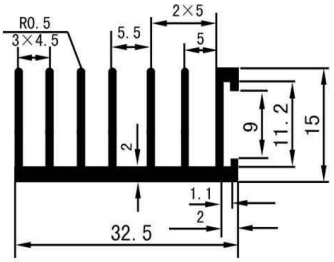

9-3-1-3-019

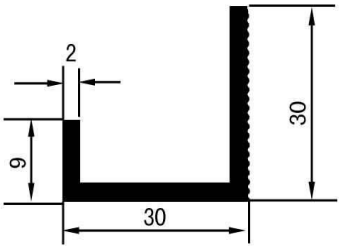

9-3-1-3-004

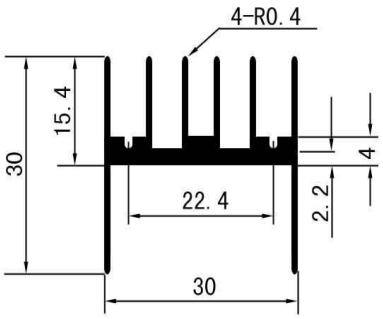

9-3-1-3-012

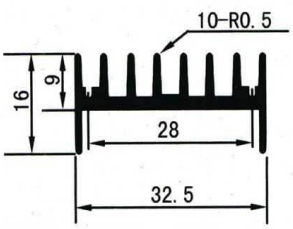

9-3-1-3-020

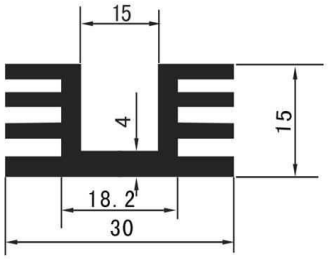

9-3-1-3-005

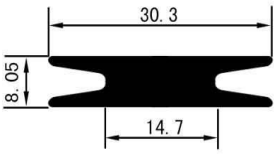

9-3-1-3-013

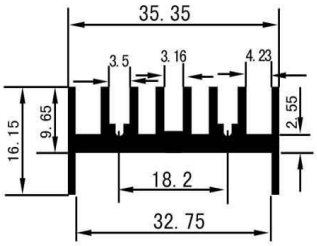

9-3-1-3-021

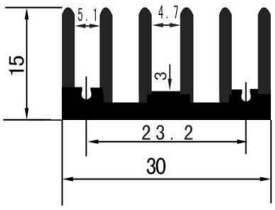

9-3-1-3-006

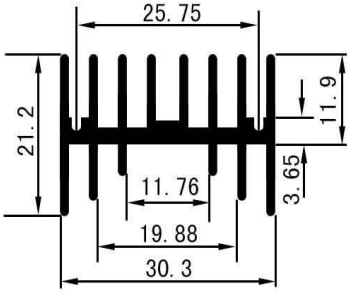

9-3-1-3-014

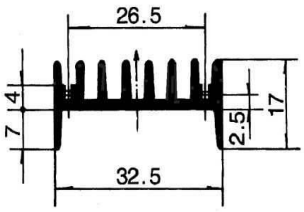

9-3-1-3-022

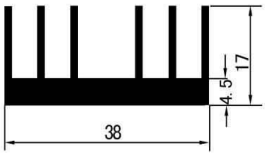

9-3-1-3-007

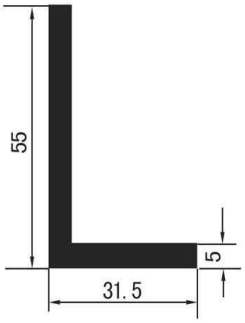

9-3-1-3-015

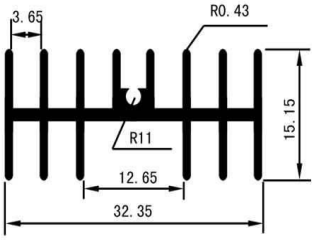

9-3-1-3-023

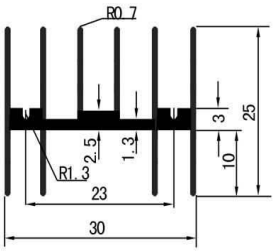

9-3-1-3-008

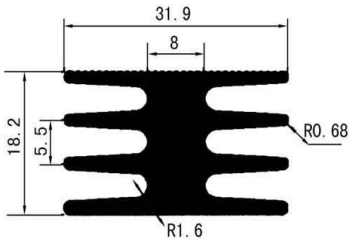

9-3-1-3-016

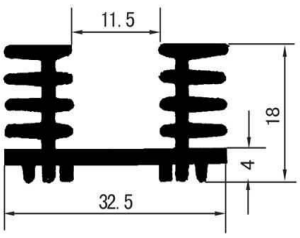

9-3-1-3-024

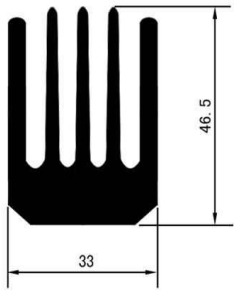

9-3-1-3-025

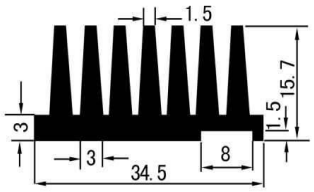

9-3-1-3-033

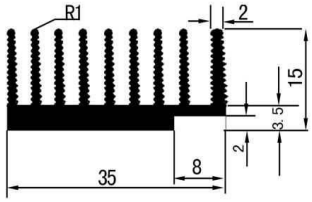

9-3-1-3-041

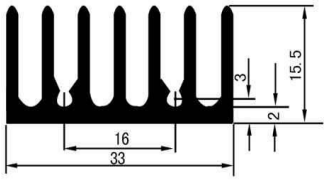

9-3-1-3-026

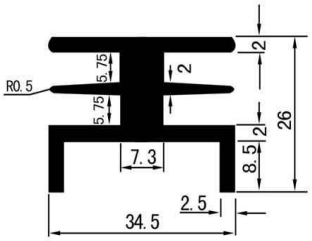

9-3-1-3-034

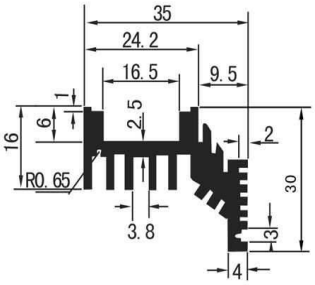

9-3-1-3-042

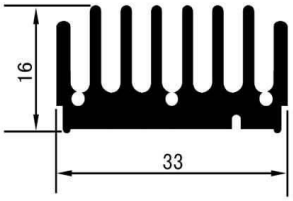

9-3-1-3-027

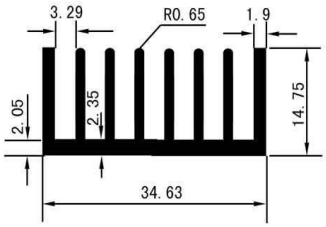

9-3-1-3-035

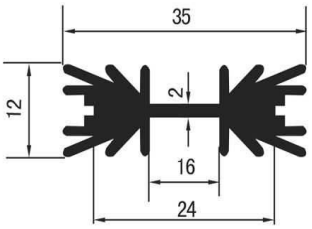

9-3-1-3-043

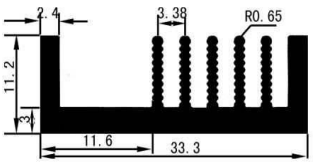

9-3-1-3-028

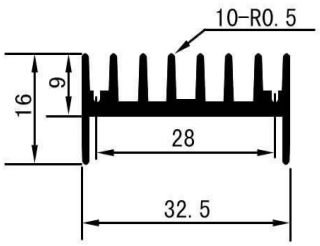

9-3-1-3-036

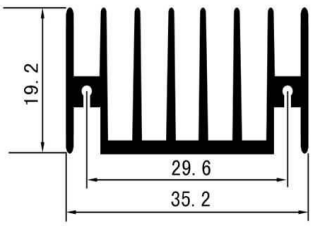

9-3-1-3-044

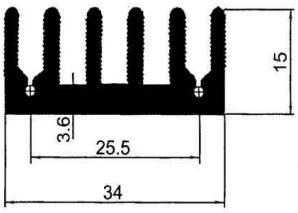

9-3-1-3-029

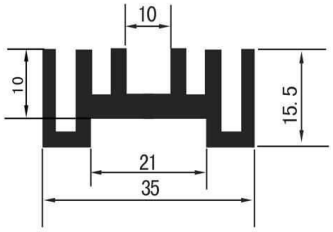

9-3-1-3-037

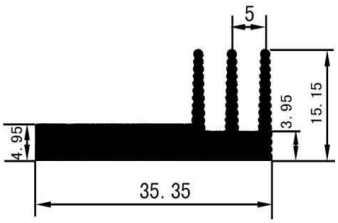

9-3-1-3-045

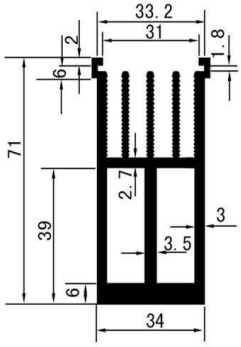

9-3-1-3-030

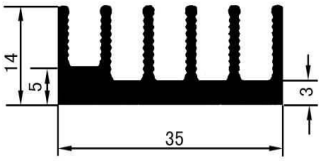

9-3-1-3-038

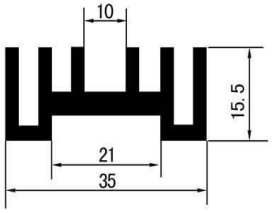

9-3-1-3-046

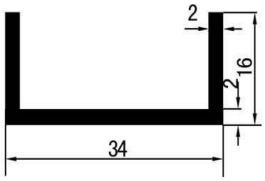

9-3-1-3-031

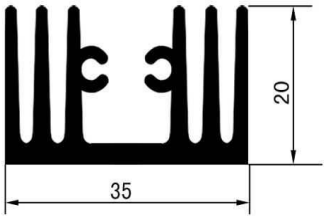

9-3-1-3-039

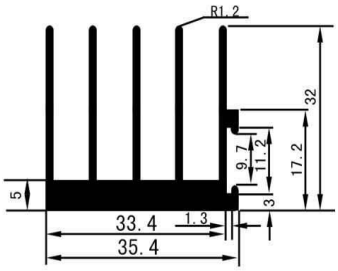

9-3-1-3-047

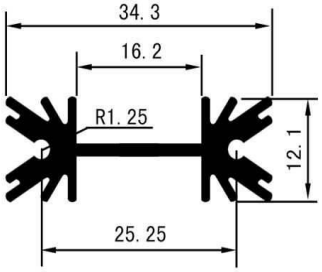

9-3-1-3-032

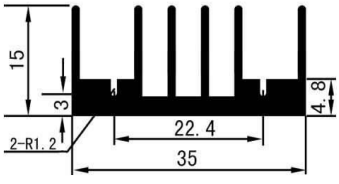

9-3-1-3-040

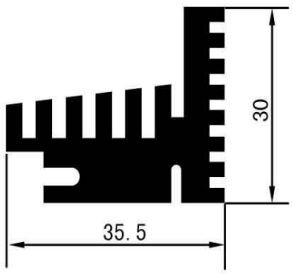

9-3-1-3-048

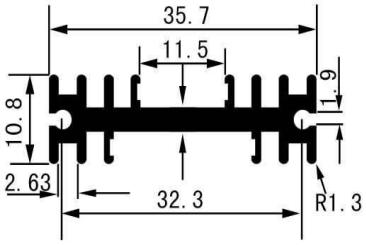

9-3-1-3-049

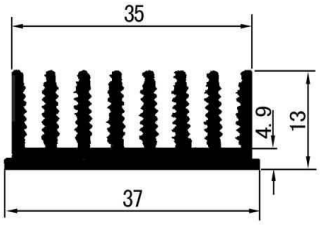

9-3-1-3-057

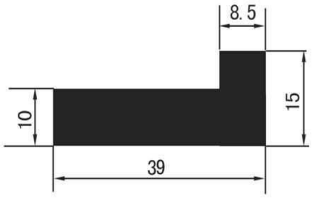

9-3-1-3-065

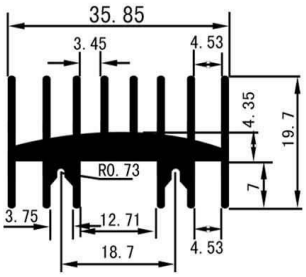

9-3-1-3-050

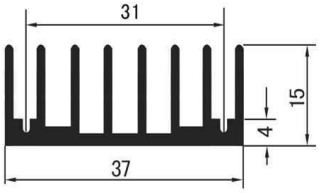

9-3-1-3-058

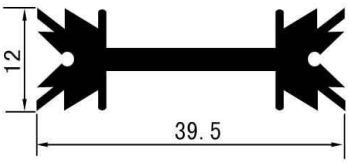

9-3-1-3-066

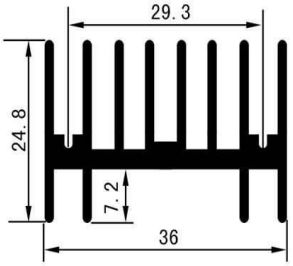

9-3-1-3-051

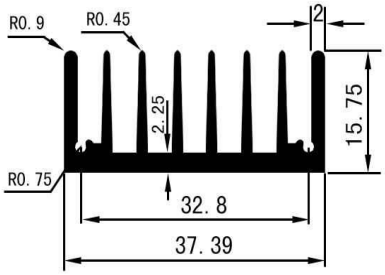

9-3-1-3-059

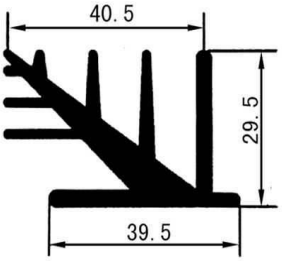

9-3-1-3-067

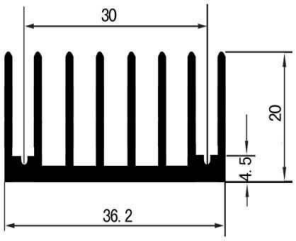

9-3-1-3-052

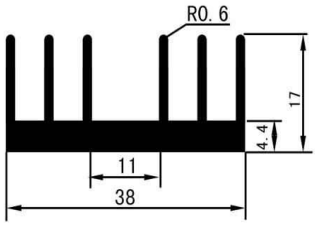

9-3-1-3-060

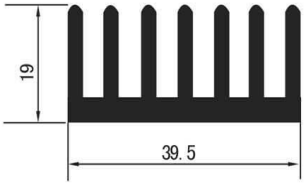

9-3-1-3-068

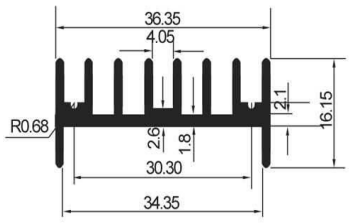

9-3-1-3-053

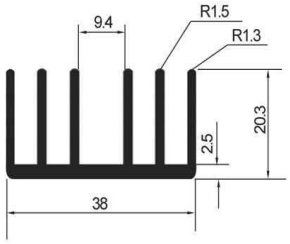

9-3-1-3-061

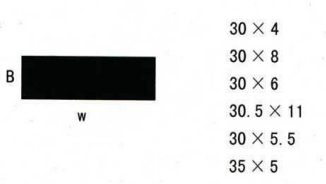

9-3-1-3-069

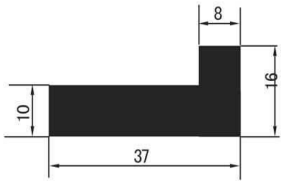

9-3-1-3-054

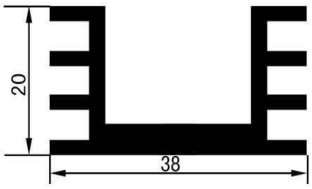

9-3-1-3-062

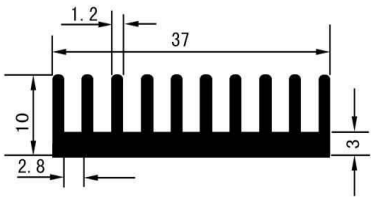

9-3-1-3-055

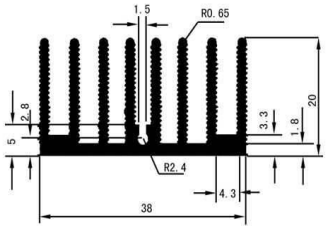

9-3-1-3-063

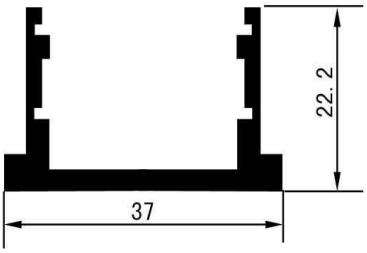

9-3-1-3-056

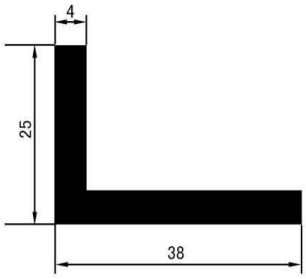

9-3-1-3-064

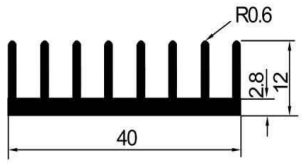

9-3-1-4-001

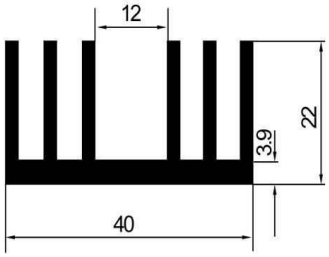

9-3-1-4-009

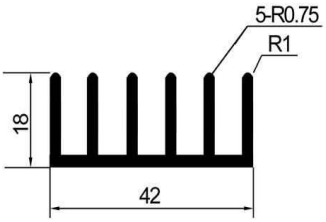

9-3-1-4-017

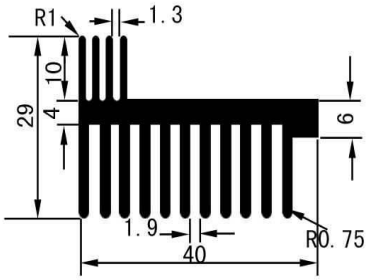

9-3-1-4-002

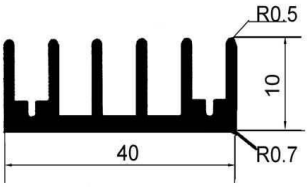

9-3-1-4-010

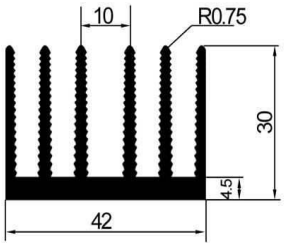

9-3-1-4-018

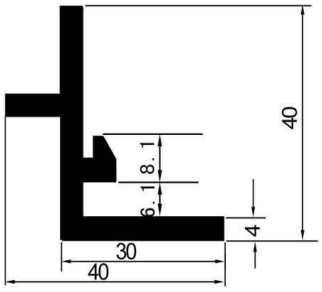

9-3-1-4-003

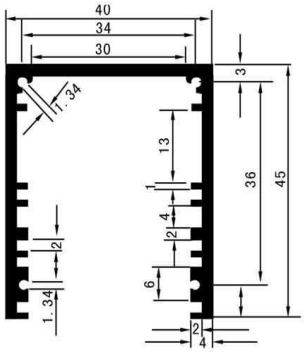

9-3-1-4-011

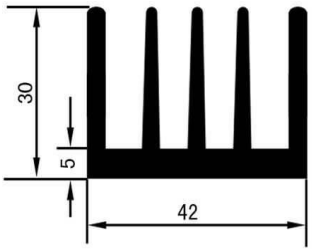

9-3-1-4-019

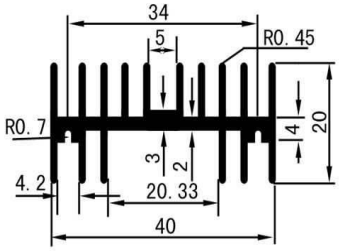

9-3-1-4-004

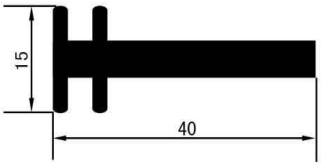

9-3-1-4-012

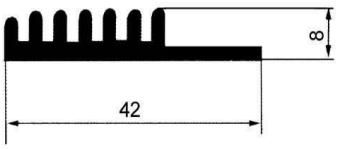

9-3-1-4-020

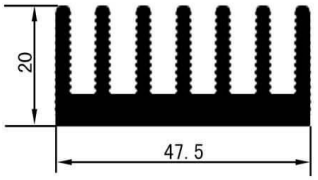

9-3-1-4-005

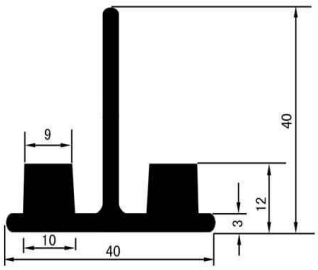

9-3-1-4-013

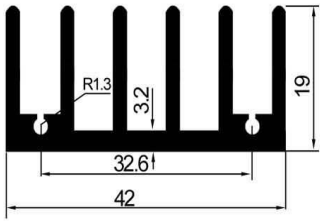

9-3-1-4-021

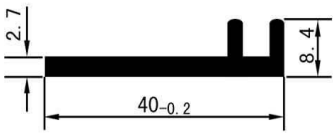

9-3-1-4-006

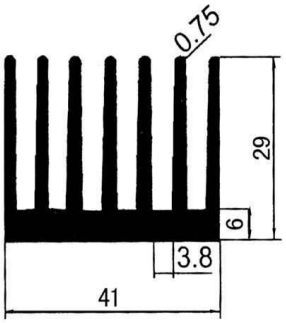

9-3-1-4-014

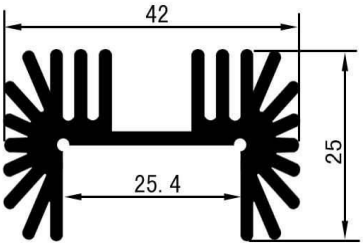

9-3-1-4-022

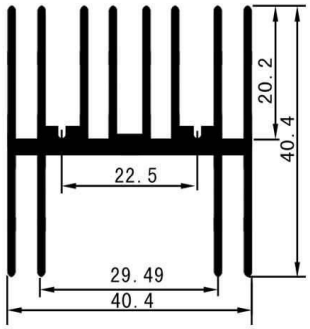

9-3-1-4-007

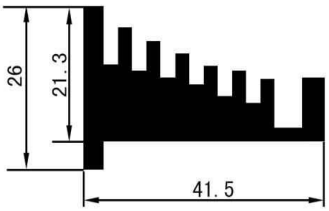

9-3-1-4-015

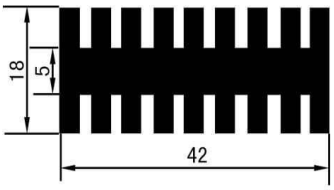

9-3-1-4-023

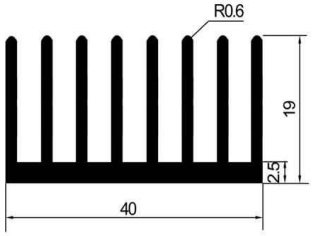

9-3-1-4-008

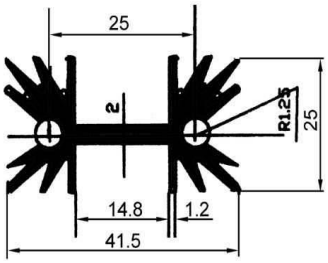

9-3-1-4-016

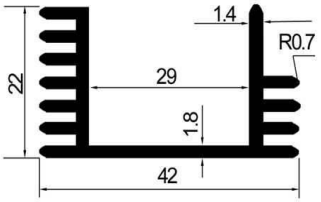

9-3-1-4-024

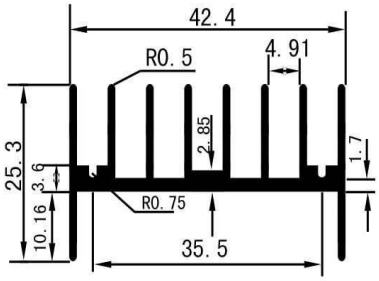

9-3-1-4-025

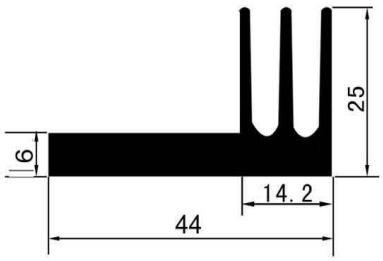

9-3-1-4-033

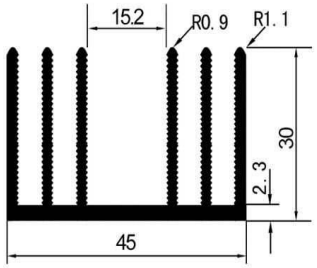

9-3-1-4-041

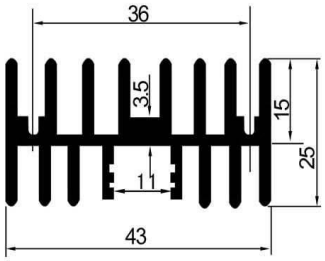

9-3-1-4-026

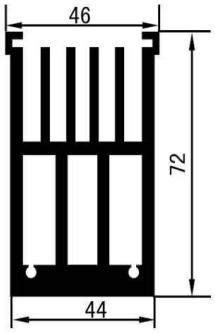

9-3-1-4-034

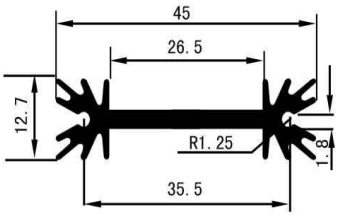

9-3-1-4-042

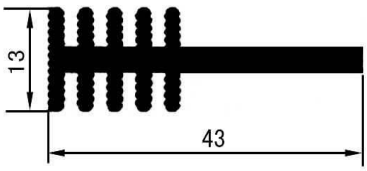

9-3-1-4-027

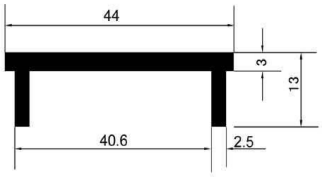

9-3-1-4-035

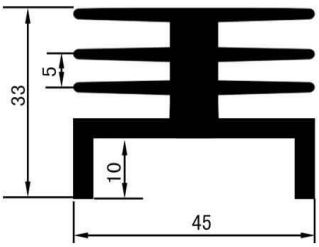

9-3-1-4-043

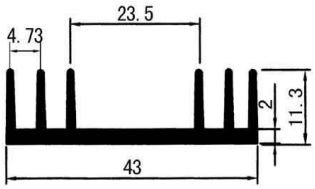

9-3-1-4-028

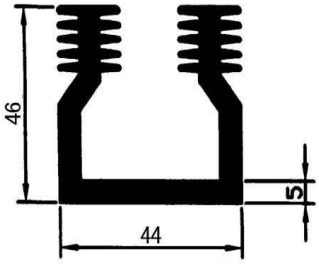

9-3-1-4-036

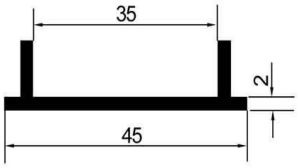

9-3-1-4-044

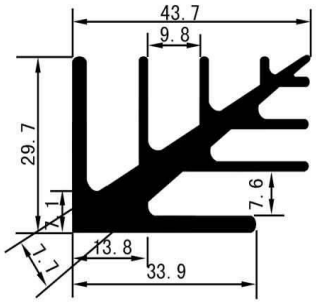

9-3-1-4-029

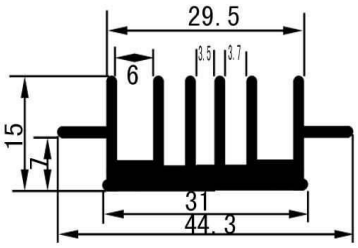

9-3-1-4-037

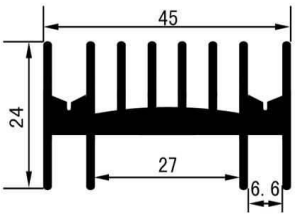

9-3-1-4-045

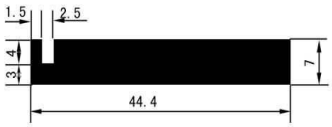

9-3-1-4-030

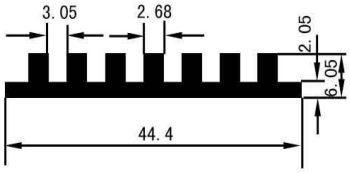

9-3-1-4-038

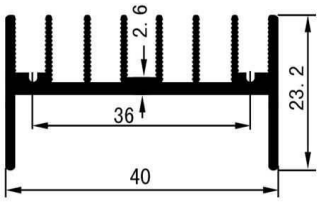

9-3-1-4-046

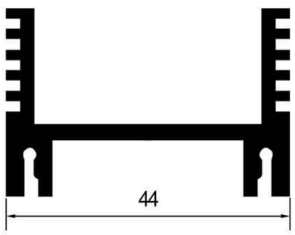

9-3-1-4-031

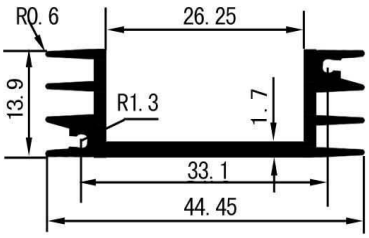

9-3-1-4-039

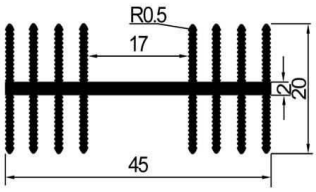

9-3-1-4-047

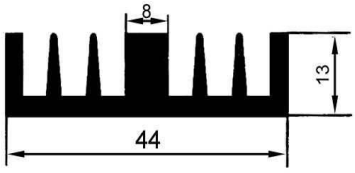

9-3-1-4-032

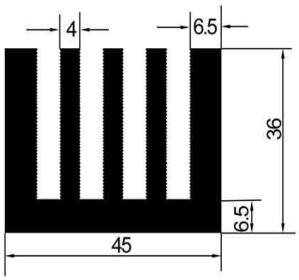

9-3-1-4-040

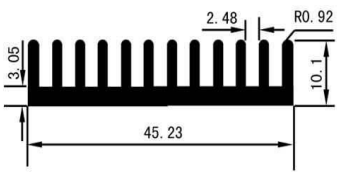

9-3-1-4-048

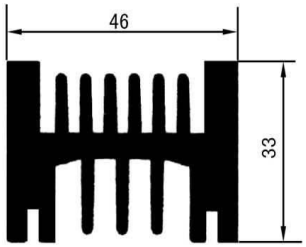

9-3-1-4-049

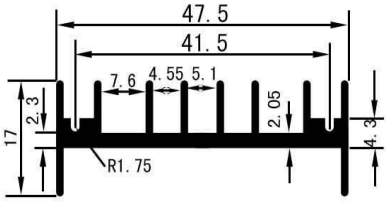

9-3-1-4-057

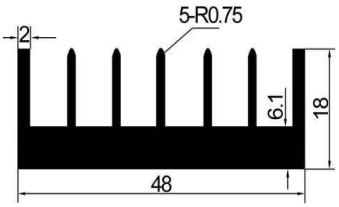

9-3-1-4-065

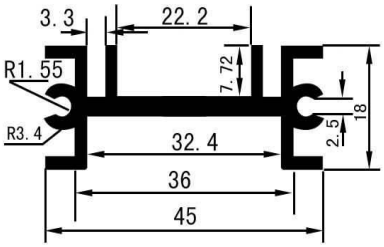

9-3-1-4-050

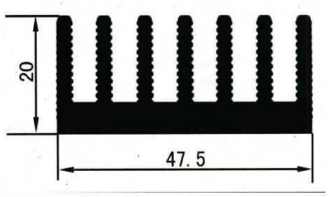

9-3-1-4-058

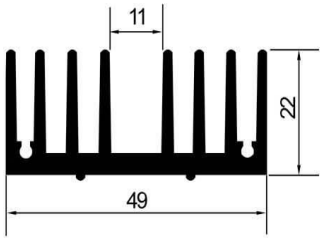

9-3-1-4-066

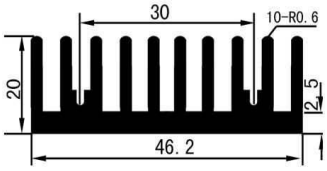

9-3-1-4-051

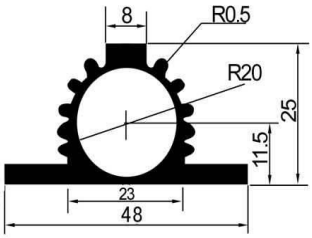

9-3-1-4-059

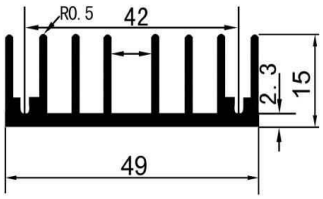

9-3-1-4-067

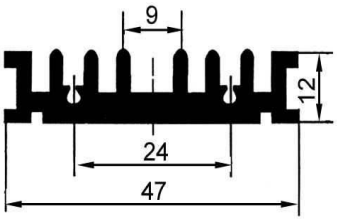

9-3-1-4-052

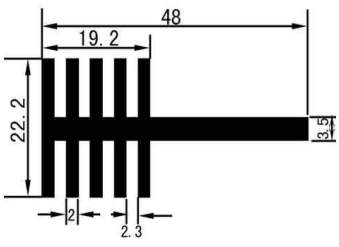

9-3-1-4-060

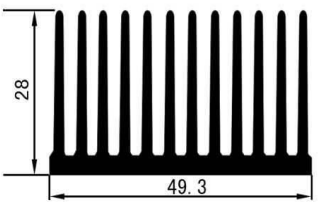

9-3-1-4-068

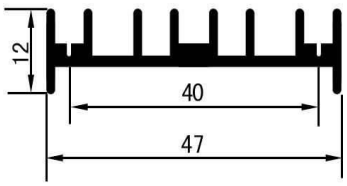

9-3-1-4-053

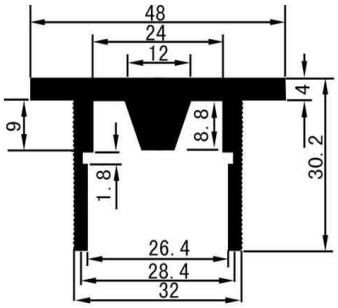

9-3-1-4-061

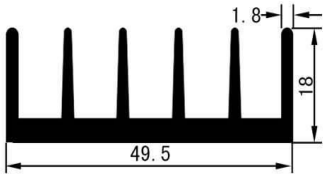

9-3-1-4-069

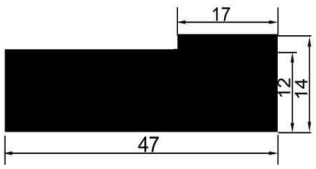

9-3-1-4-054

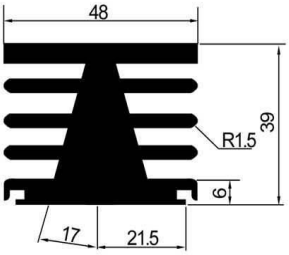

9-3-1-4-062



9-3-1-4-070

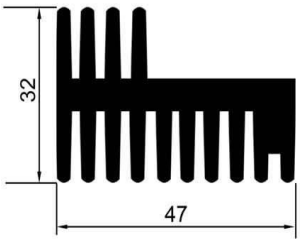

9-3-1-4-055

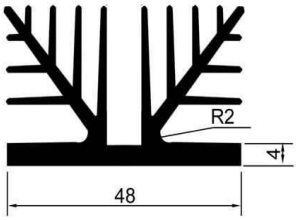

9-3-1-4-063

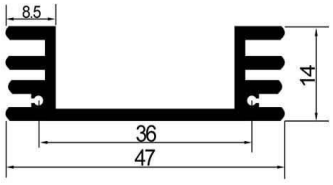

9-3-1-4-056

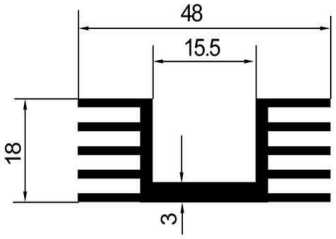

9-3-1-4-064

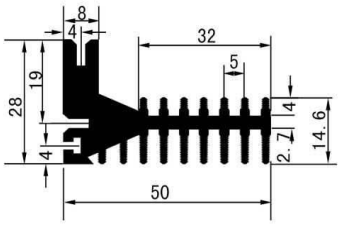

9-3-1-5-001

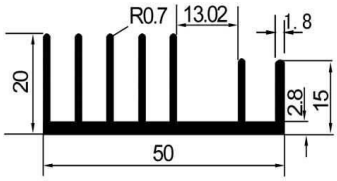

9-3-1-5-009

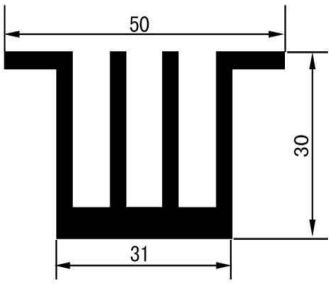

9-3-1-5-017

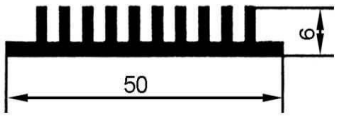

9-3-1-5-002

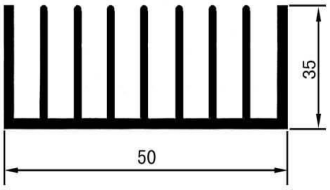

9-3-1-5-010

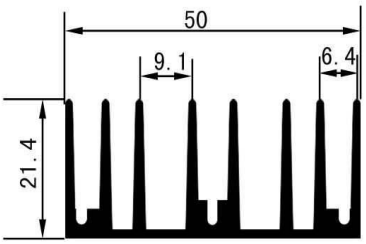

9-3-1-5-018

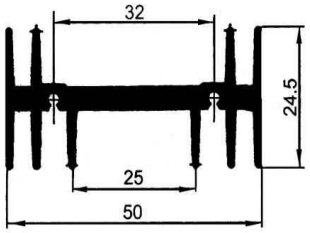

9-3-1-5-003

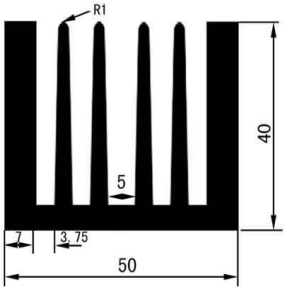

9-3-1-5-011

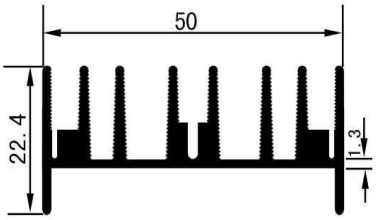

9-3-1-5-019

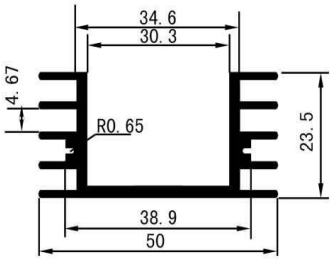

9-3-1-5-004

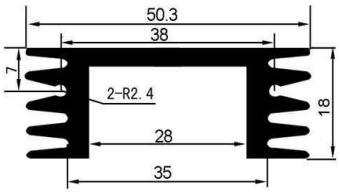

9-3-1-5-012

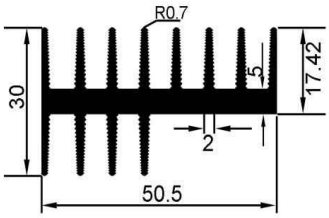

9-3-1-5-020

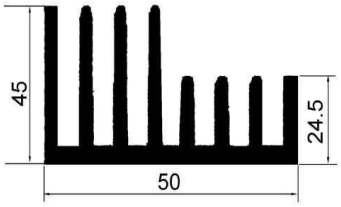

9-3-1-5-005

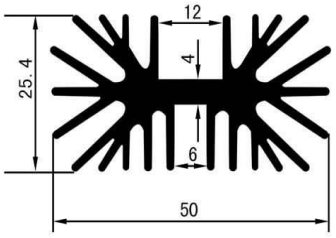

9-3-1-5-013

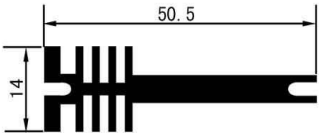

9-3-1-5-021

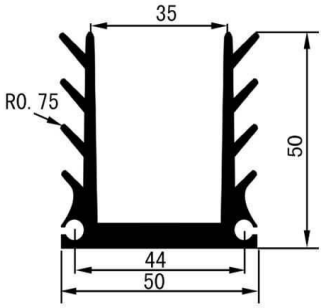

9-3-1-5-006

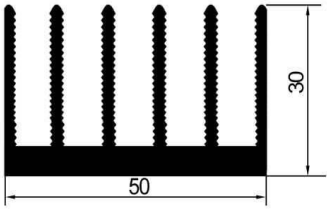

9-3-1-5-014

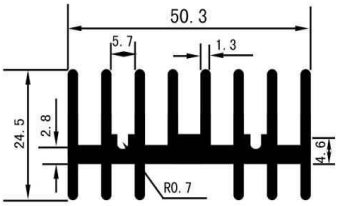

9-3-1-5-022

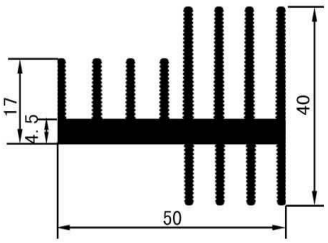

9-3-1-5-007

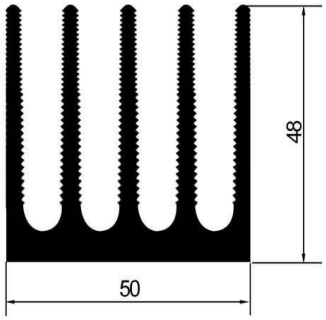

9-3-1-5-015

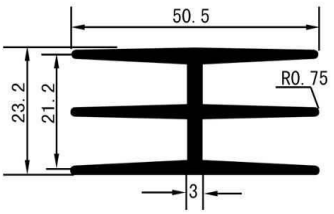

9-3-1-5-023

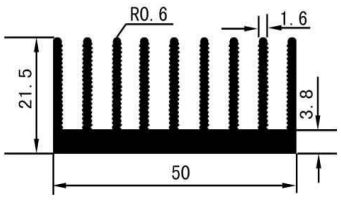

9-3-1-5-008

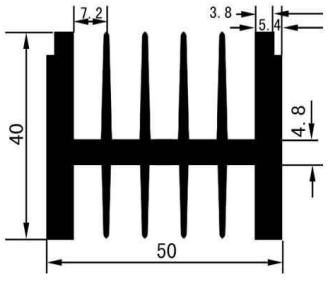

9-3-1-5-016

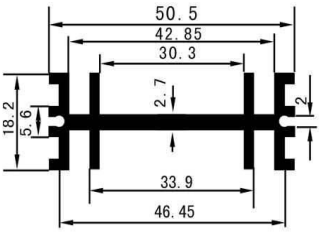

9-3-1-5-024

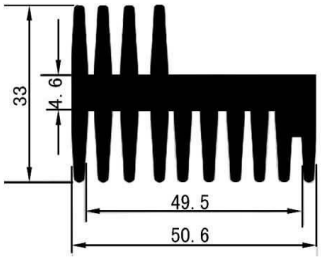

9-3-1-5-025

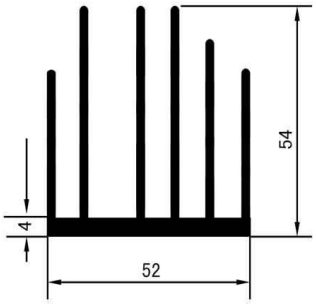

9-3-1-5-033

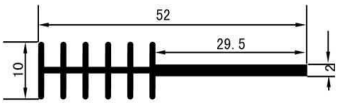

9-3-1-5-041

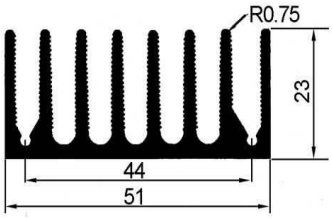

9-3-1-5-026

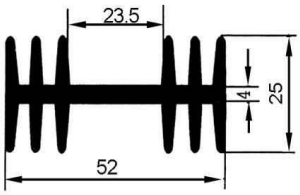

9-3-1-5-034

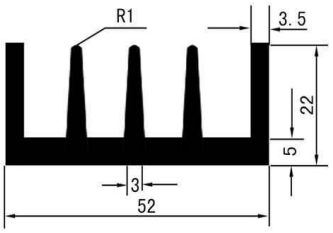

9-3-1-5-042

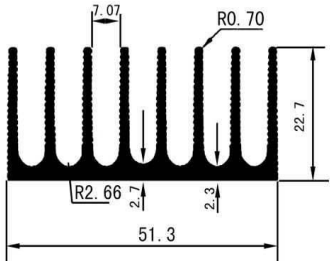

9-3-1-5-027

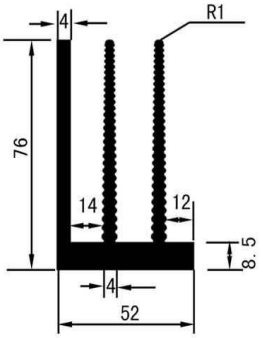

9-3-1-5-035

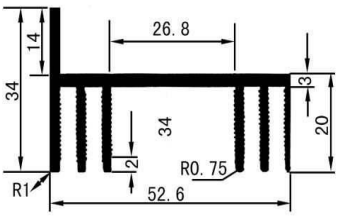

9-3-1-5-043

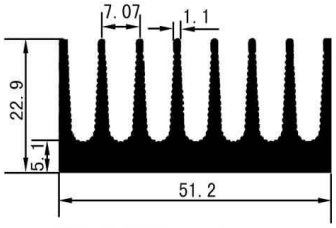

9-3-1-5-028

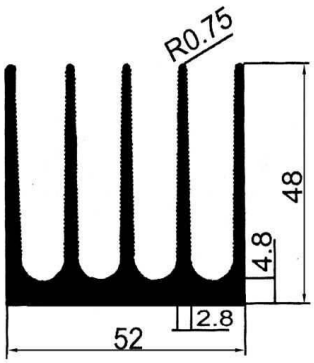

9-3-1-5-036

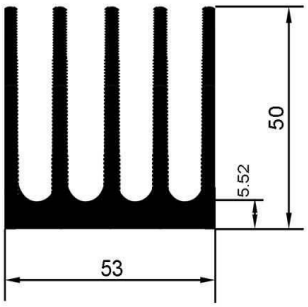

9-3-1-5-044

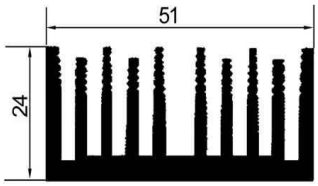

9-3-1-5-029

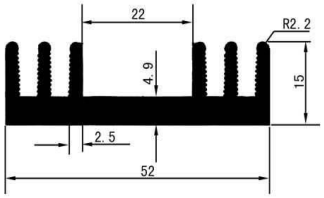

9-3-1-5-037

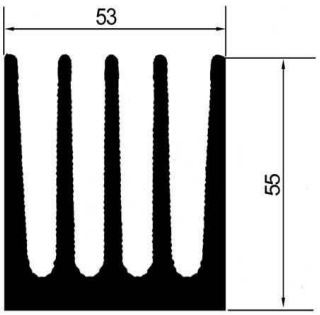

9-3-1-5-045

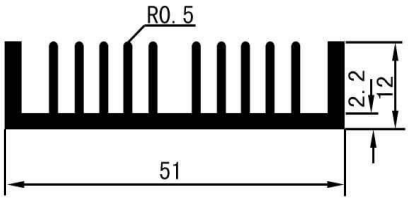

9-3-1-5-030

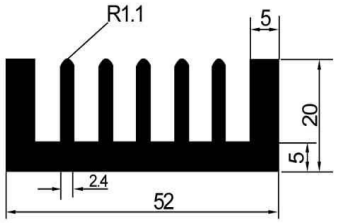

9-3-1-5-038

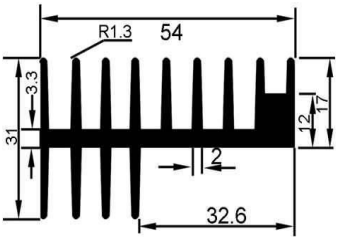

9-3-1-5-046

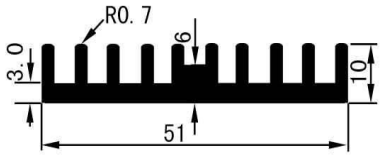

9-3-1-5-031

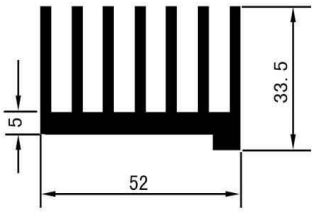

9-3-1-5-039

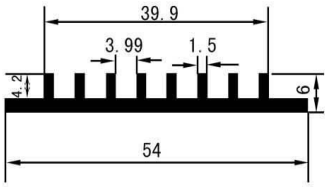

9-3-1-5-047

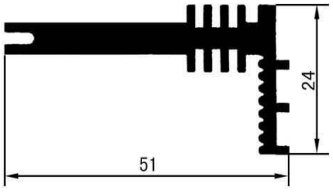

9-3-1-5-032

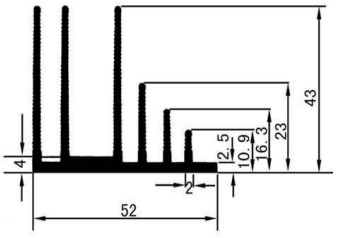

9-3-1-5-040

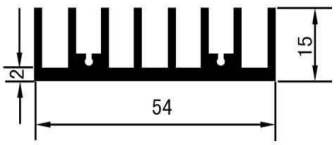

9-3-1-5-048

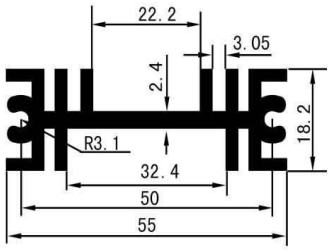

9-3-1-5-049

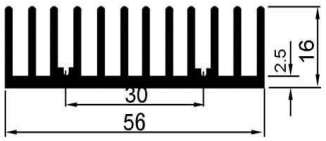

9-3-1-5-057

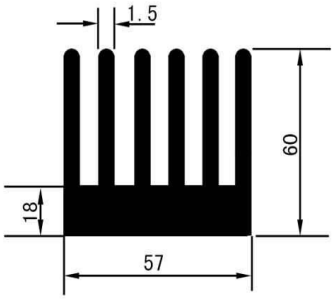

9-3-1-5-065

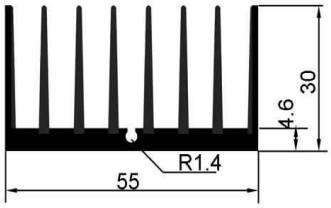

9-3-1-5-050

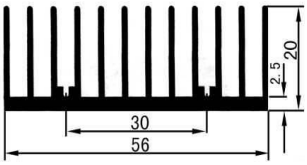

9-3-1-5-058

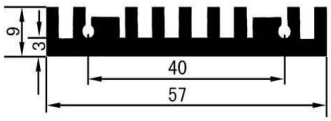

9-3-1-5-066

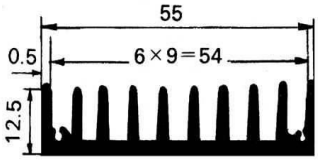

9-3-1-5-051

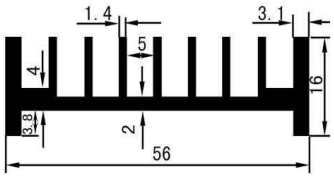

9-3-1-5-059

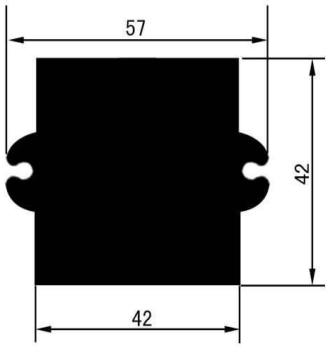

9-3-1-5-067

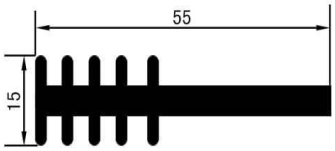

9-3-1-5-052

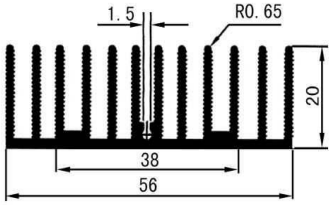

9-3-1-5-060

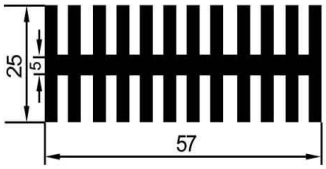

9-3-1-5-068

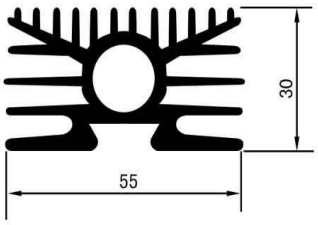

9-3-1-5-053

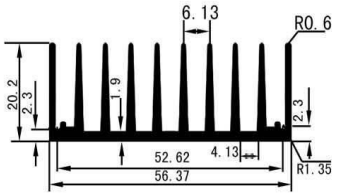

9-3-1-5-061

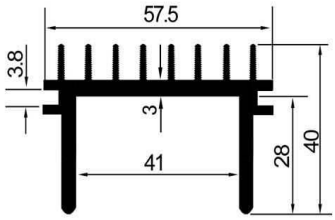

9-3-1-5-069

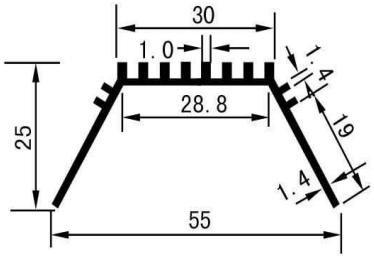

9-3-1-5-054

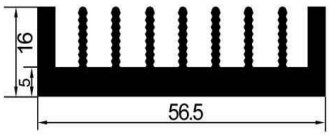

9-3-1-5-062

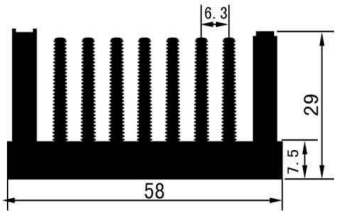

9-3-1-5-070

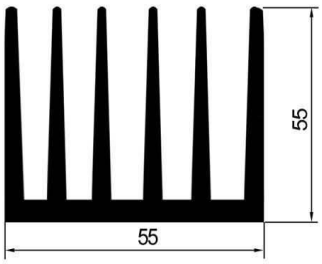

9-3-1-5-055

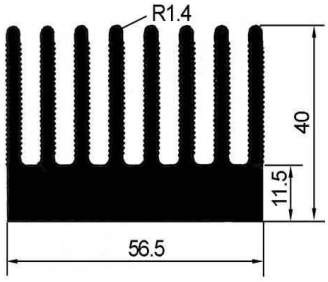

9-3-1-5-063

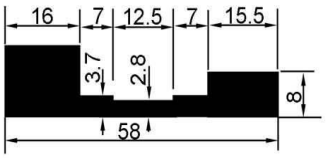

9-3-1-5-071

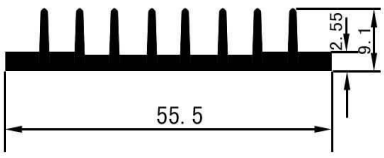

9-3-1-5-056

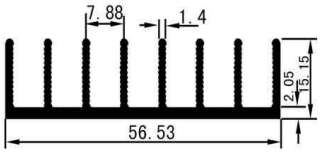

9-3-1-5-064

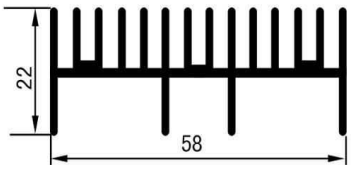

9-3-1-5-072

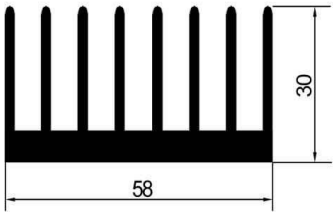

9-3-1-5-073

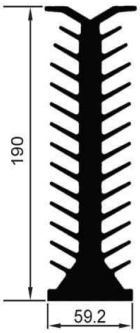

9-3-1-5-077

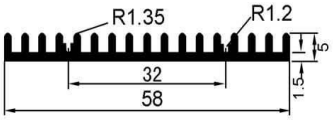

9-3-1-5-074

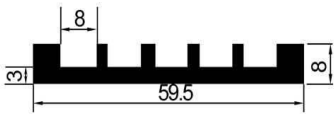

9-3-1-5-078

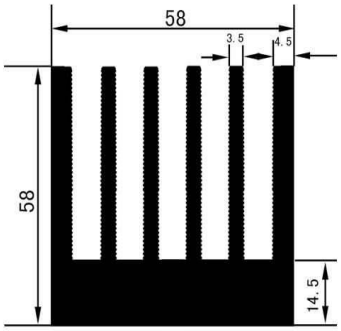

9-3-1-5-075

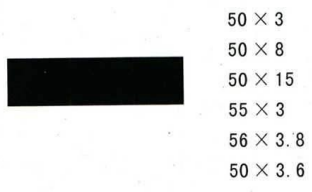

9-3-1-5-079

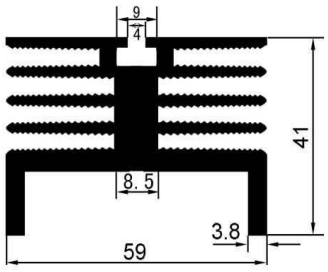

9-3-1-5-076

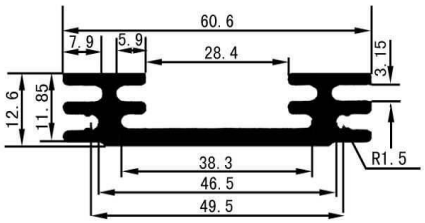

9-3-1-6-001

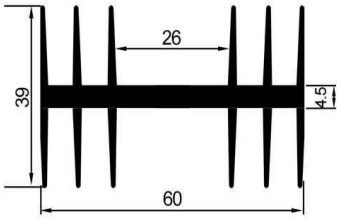

9-3-1-6-009

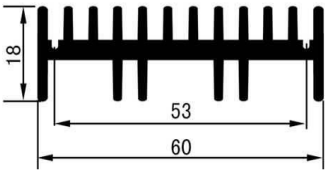

9-3-1-6-017

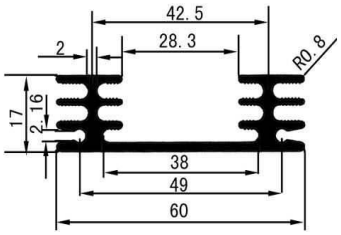

9-3-1-6-002

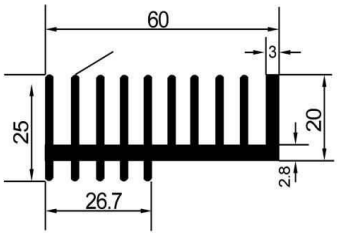

9-3-1-6-010

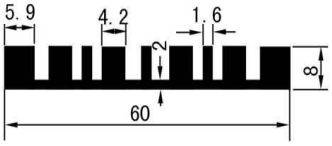

9-3-1-6-018

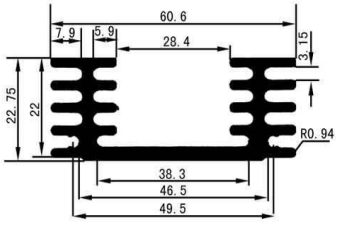

9-3-1-6-003

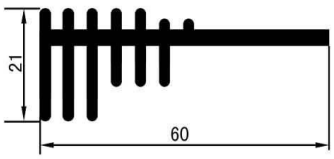

9-3-1-6-011

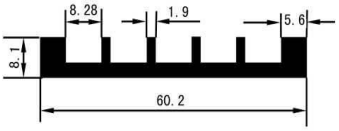

9-3-1-6-019

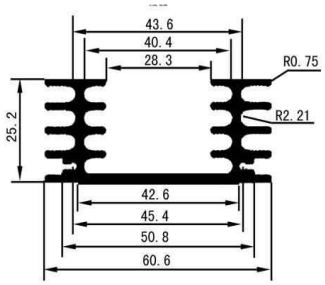

9-3-1-6-004

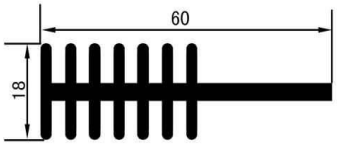

9-3-1-6-012

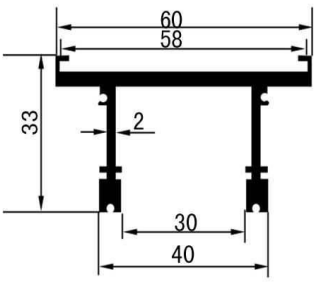

9-3-1-6-020

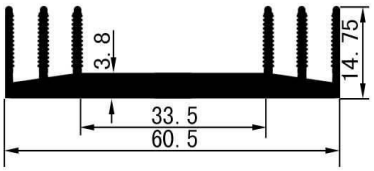

9-3-1-6-005

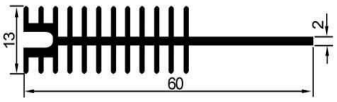

9-3-1-6-013

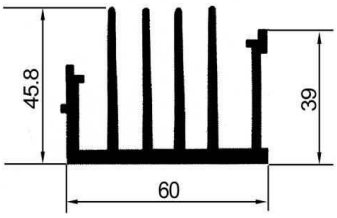

9-3-1-6-021

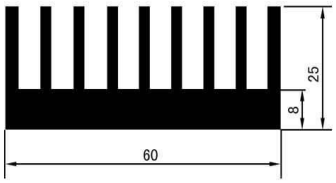

9-3-1-6-006

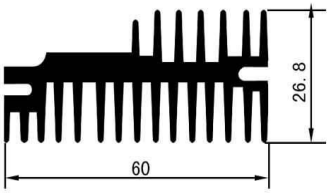

9-3-1-6-014

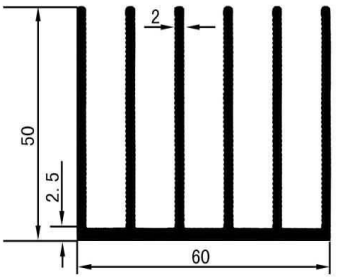

9-3-1-6-022

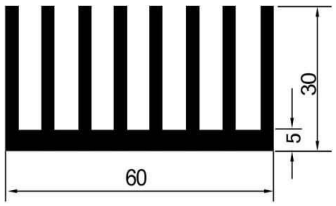

9-3-1-6-007

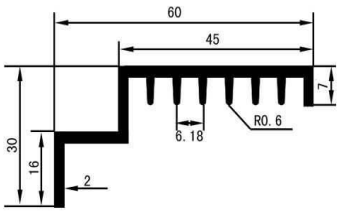

9-3-1-6-015

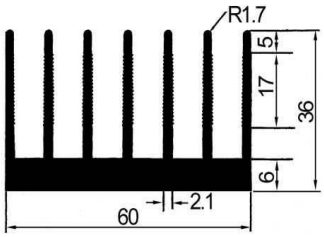

9-3-1-6-023

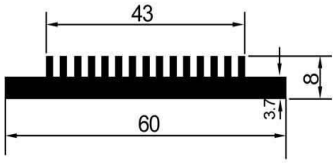

9-3-1-6-008

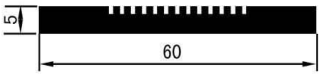

9-3-1-6-016

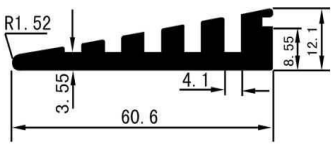

9-3-1-6-024

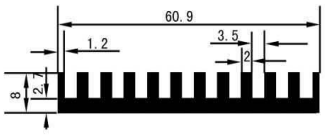

9-3-1-6-025

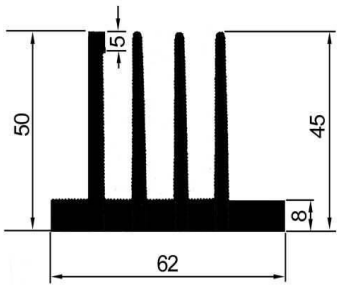

9-3-1-6-033

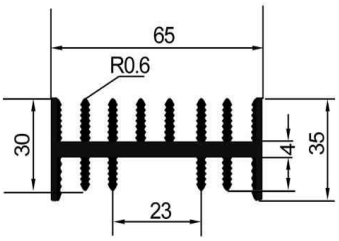

9-3-1-6-041

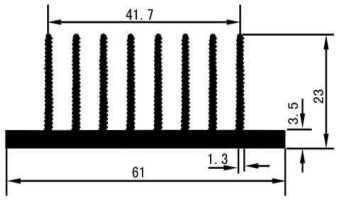

9-3-1-6-026

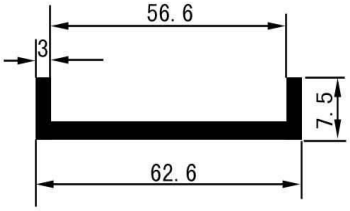

9-3-1-6-034

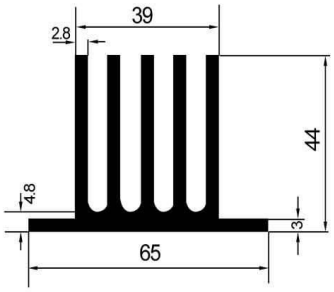

9-3-1-6-042

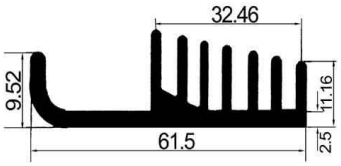

9-3-1-6-027

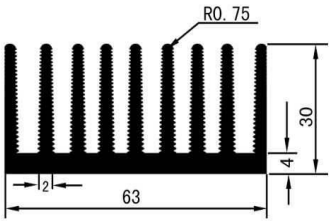

9-3-1-6-035

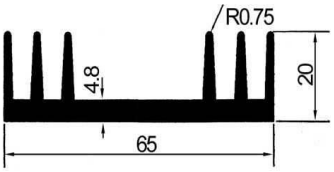

9-3-1-6-043

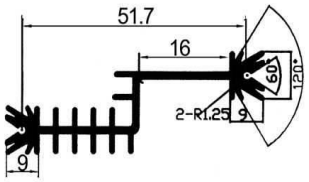

9-3-1-6-028

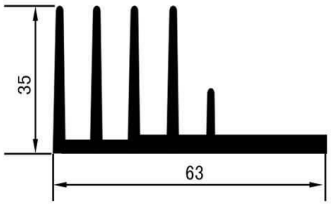

9-3-1-6-036

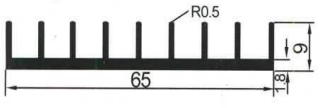

9-3-1-6-044

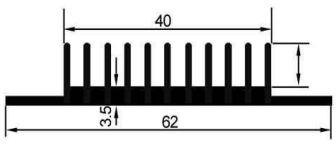

9-3-1-6-029

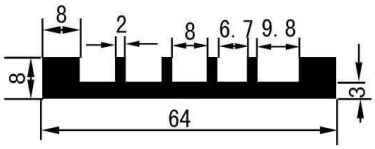

9-3-1-6-037

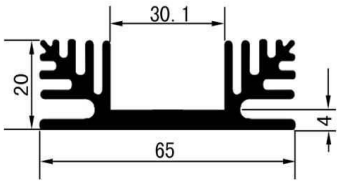

9-3-1-6-045

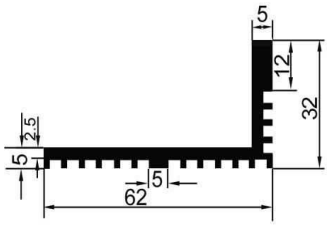

9-3-1-6-030

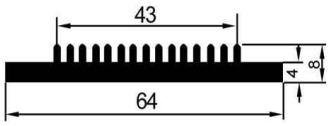

9-3-1-6-038

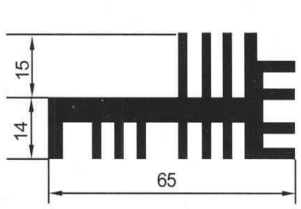

9-3-1-6-046

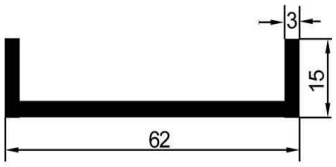

9-3-1-6-031

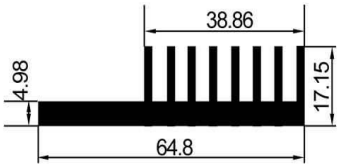

9-3-1-6-039

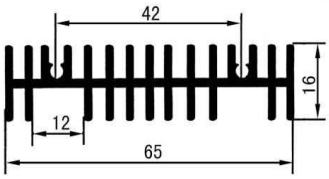

9-3-1-6-047

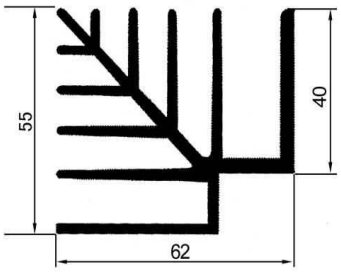

9-3-1-6-032

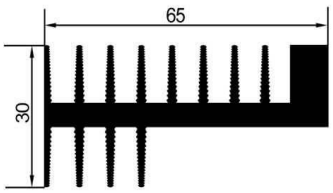

9-3-1-6-040

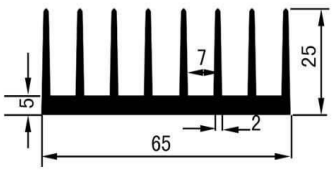

9-3-1-6-048

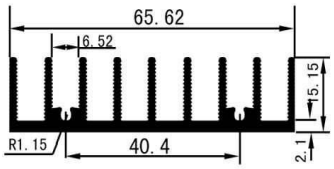

9-3-1-6-049

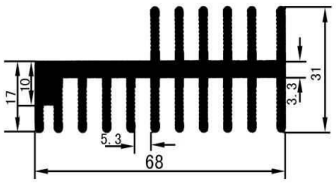

9-3-1-6-057

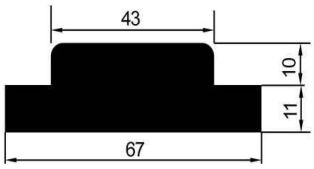

9-3-1-6-053

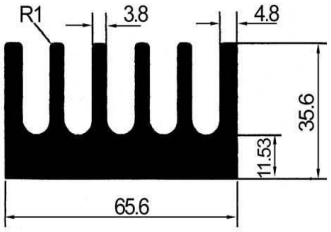

9-3-1-6-050

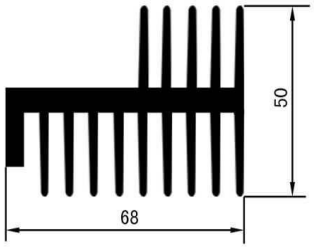

9-3-1-6-058

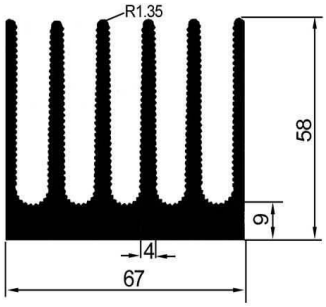

9-3-1-6-054

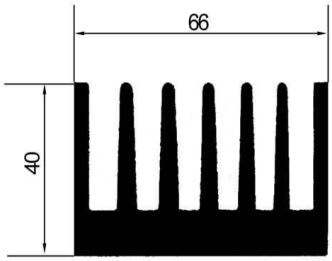

9-3-1-6-051

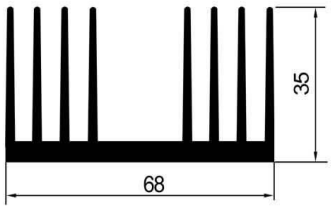

9-3-1-6-059

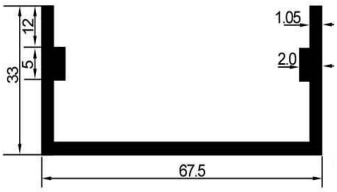

9-3-1-6-055

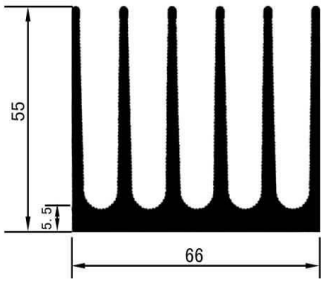

9-3-1-6-052



9-3-1-6-060

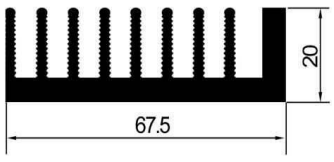

9-3-1-6-056

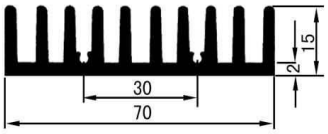

9-3-1-7-001

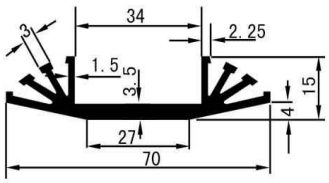

9-3-1-7-009

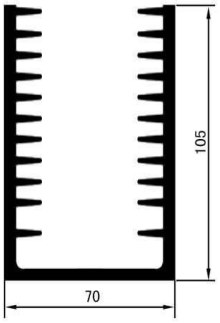

9-3-1-7-017

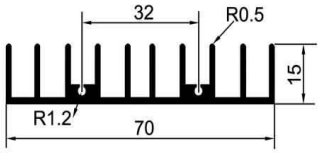

9-3-1-7-002

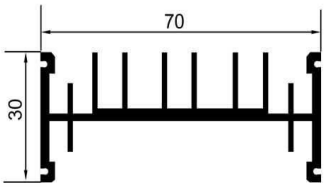

9-3-1-7-010

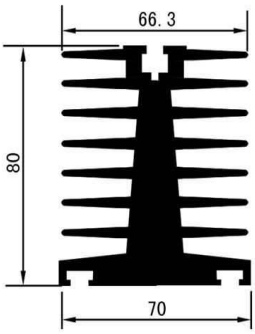

9-3-1-7-018

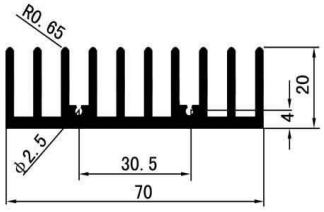

9-3-1-7-003

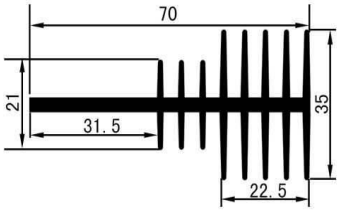

9-3-1-7-011

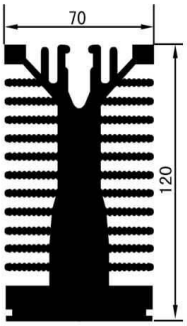

9-3-1-7-019

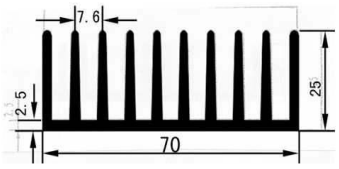

9-3-1-7-004

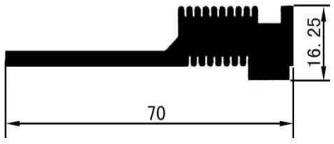

9-3-1-7-012

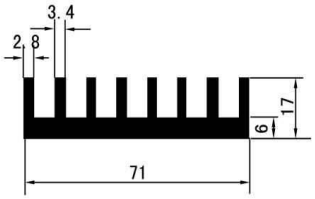

9-3-1-7-020

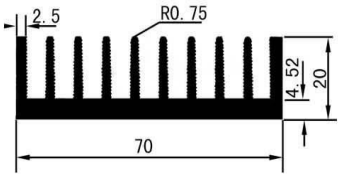

9-3-1-7-005

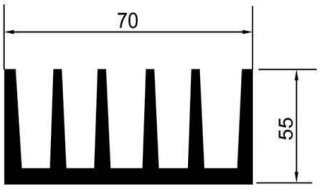

9-3-1-7-013

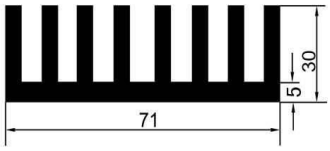

9-3-1-7-021

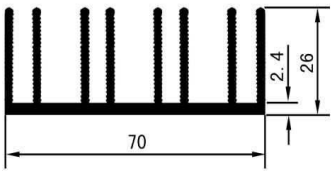

9-3-1-7-006

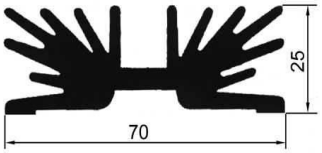

9-3-1-7-014

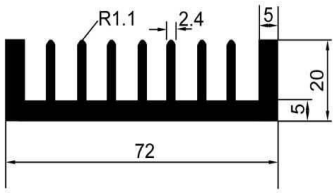

9-3-1-7-022

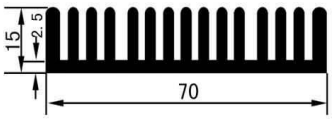

9-3-1-7-007

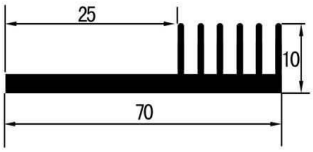

9-3-1-7-015

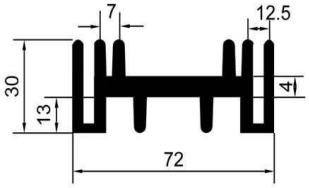

9-3-1-7-023

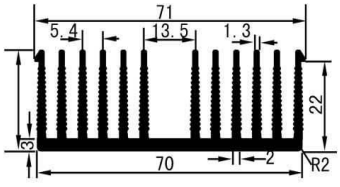

9-3-1-7-008

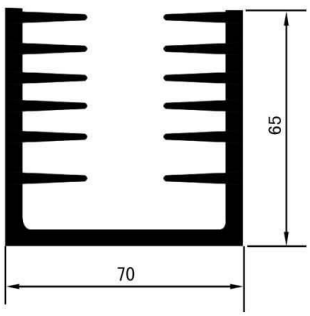

9-3-1-7-016

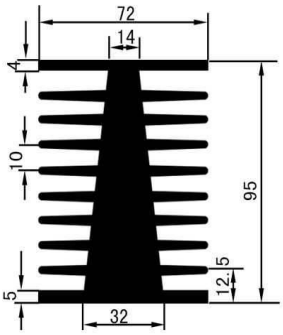

9-3-1-7-024

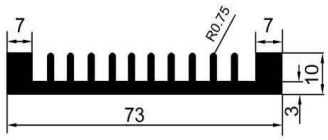

9-3-1-7-025

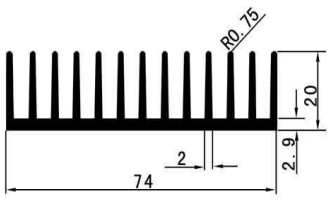

9-3-1-7-033

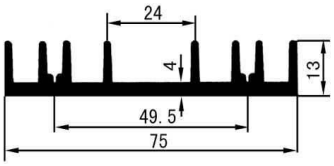

9-3-1-7-041

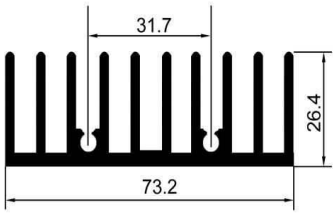

9-3-1-7-026

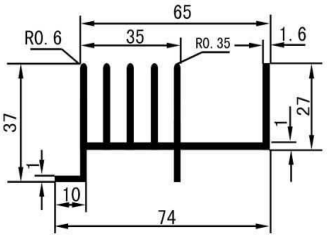

9-3-1-7-034

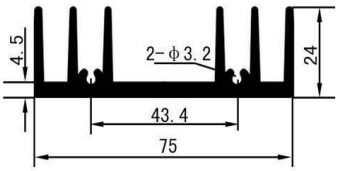

9-3-1-7-042

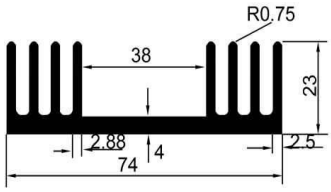

9-3-1-7-027

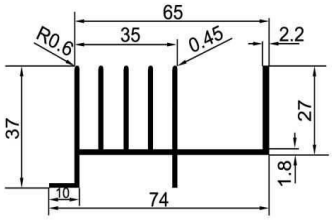

9-3-1-7-035

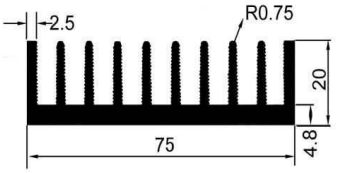

9-3-1-7-043

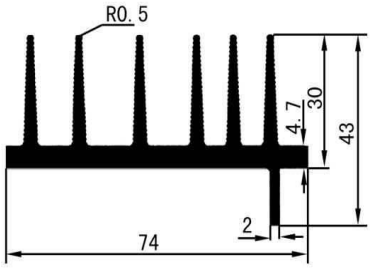

9-3-1-7-028

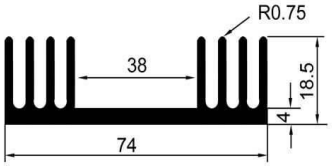

9-3-1-7-036

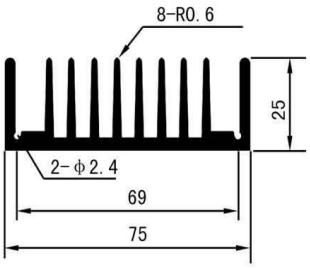

9-3-1-7-044

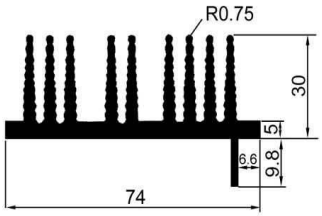

9-3-1-7-029

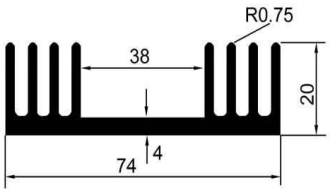

9-3-1-7-037

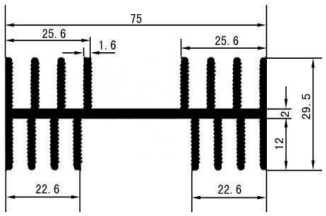

9-3-1-7-045

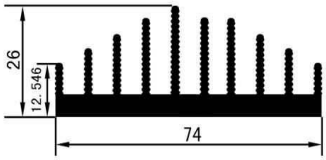

9-3-1-7-030

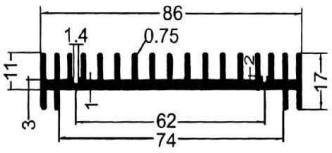

9-3-1-7-038

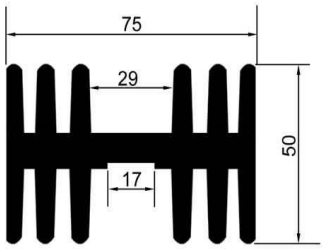

9-3-1-7-046

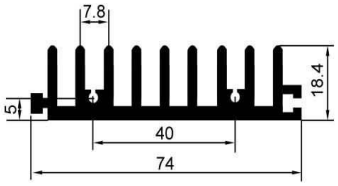

9-3-1-7-031

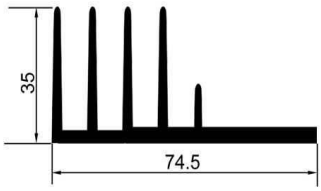

9-3-1-7-039

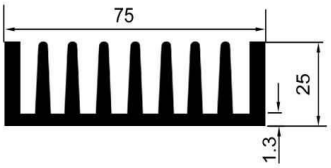

9-3-1-7-047

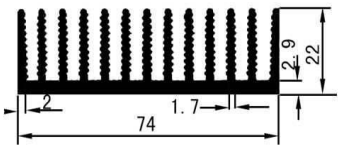

9-3-1-7-032

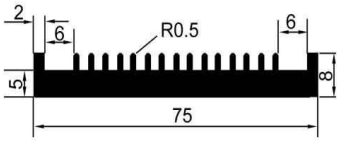

9-3-1-7-040

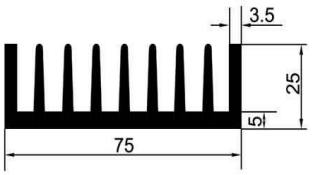

9-3-1-7-048

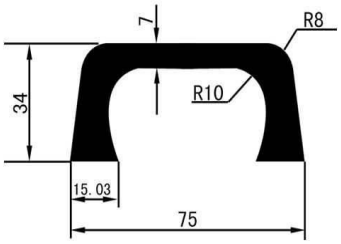

9-3-1-7-049

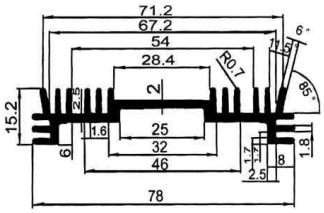

9-3-1-7-057

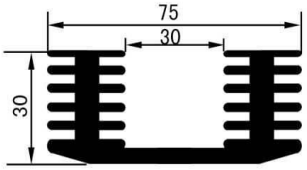

9-3-1-7-050

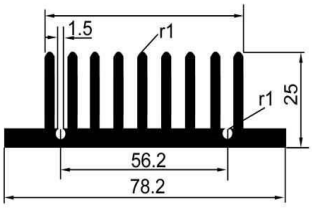

9-3-1-7-058

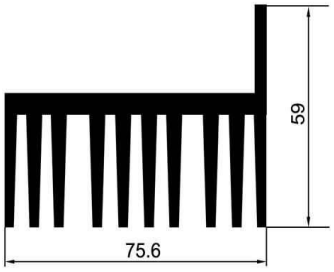

9-3-1-7-051

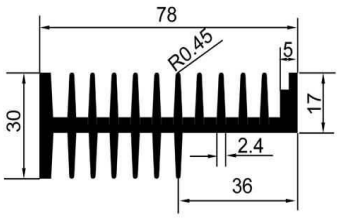

9-3-1-7-059

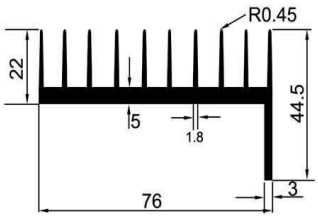

9-3-1-7-052

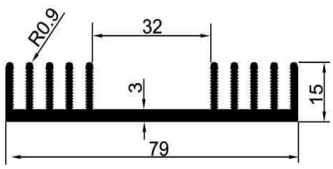

9-3-1-7-060

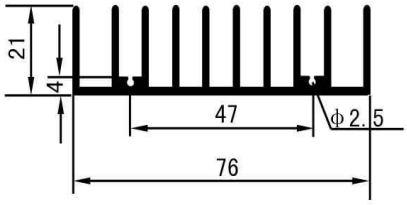

9-3-1-7-053

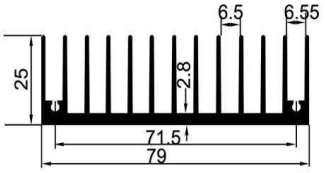

9-3-1-7-061

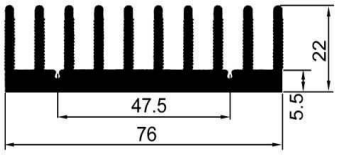

9-3-1-7-054

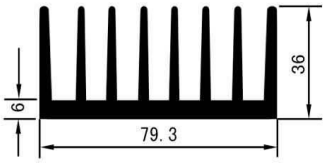

9-3-1-7-062

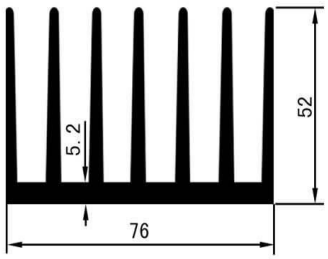

9-3-1-7-055

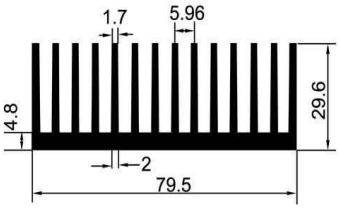

9-3-1-7-063

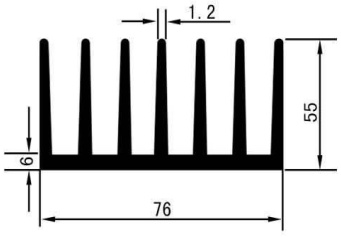

9-3-1-7-056

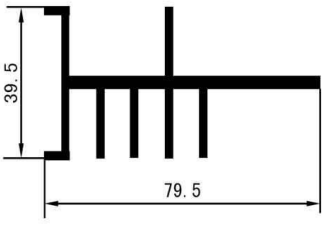

9-3-1-7-064

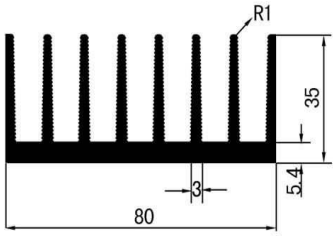

9-3-1-8-001

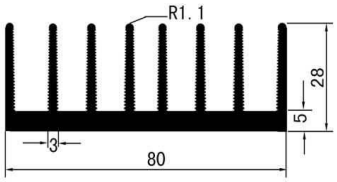

9-3-1-8-009

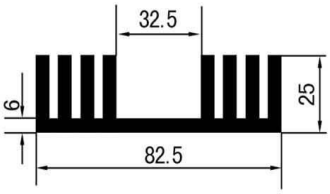

9-3-1-8-017

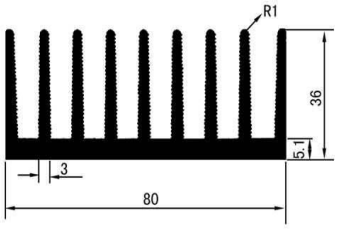

9-3-1-8-002

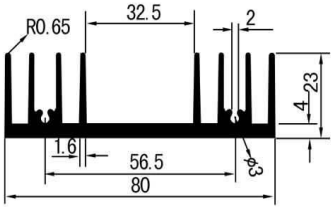

9-3-1-8-010

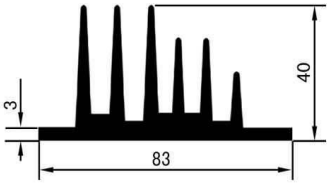

9-3-1-8-018

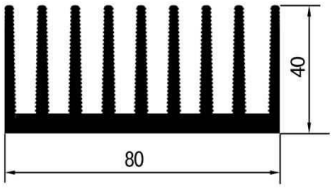

9-3-1-8-003

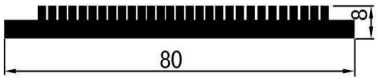

9-3-1-8-011

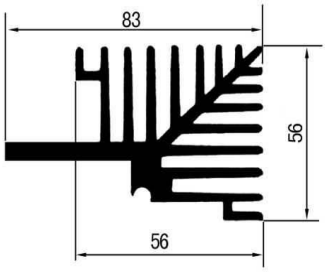

9-3-1-8-019

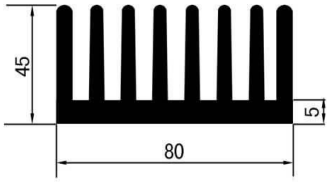

9-3-1-8-004

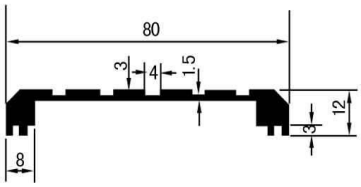

9-3-1-8-012

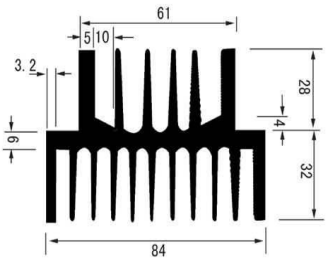

9-3-1-8-020

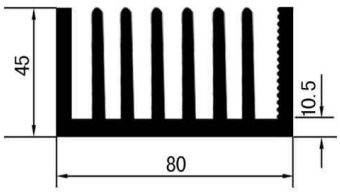

9-3-1-8-005

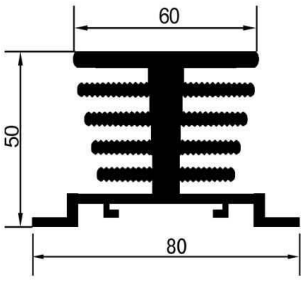

9-3-1-8-013

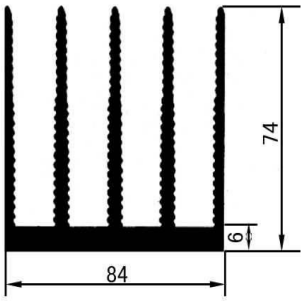

9-3-1-8-021

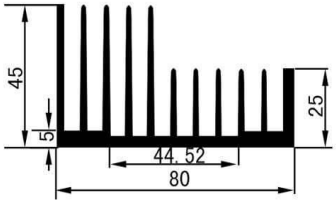

9-3-1-8-006

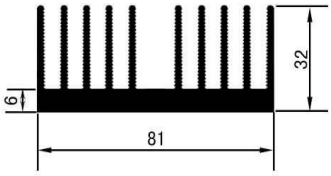

9-3-1-8-014

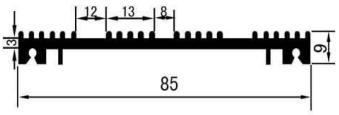

9-3-1-8-022

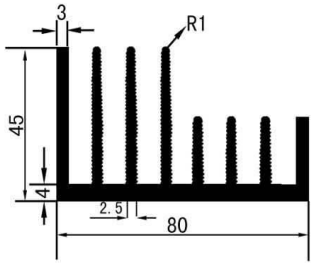

9-3-1-8-007

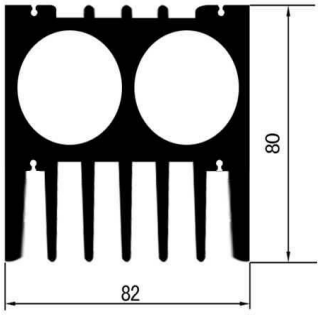

9-3-1-8-015

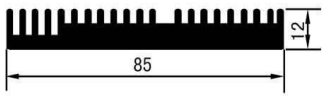

9-3-1-8-023

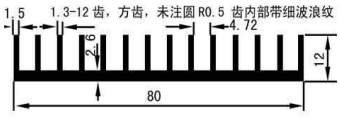

9-3-1-8-008

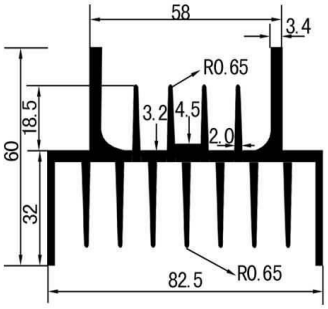

9-3-1-8-016

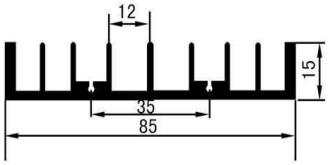

9-3-1-8-024

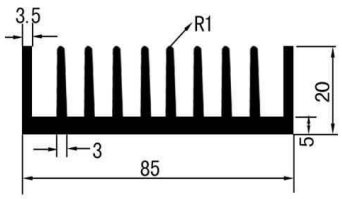

9-3-1-8-025

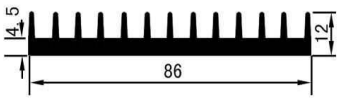

9-3-1-8-033

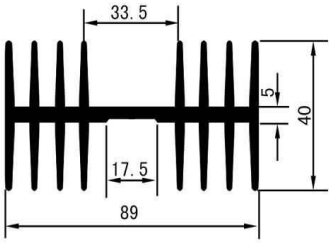

9-3-1-8-041

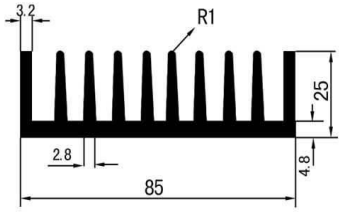

9-3-1-8-026

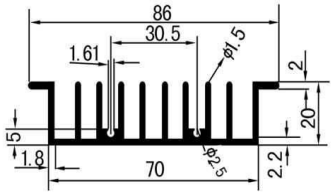

9-3-1-8-034

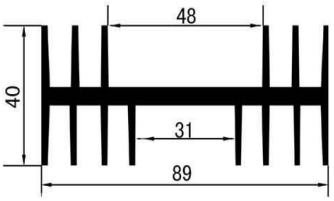

9-3-1-8-042

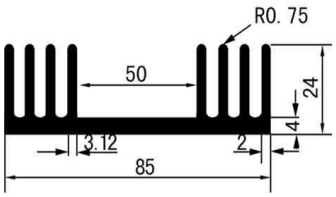

9-3-1-8-027

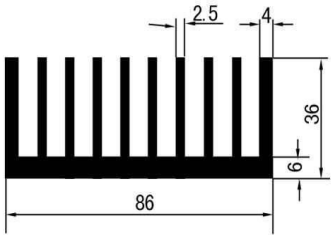

9-3-1-8-035

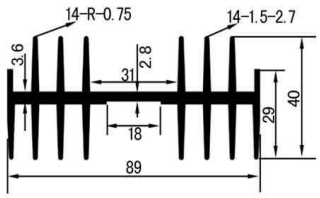

9-3-1-8-043

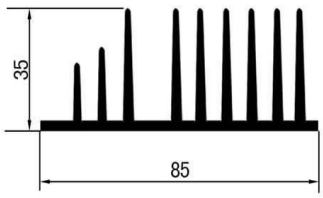

9-3-1-8-028

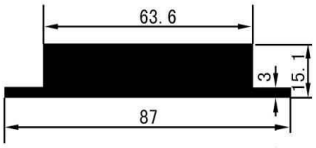

9-3-1-8-036

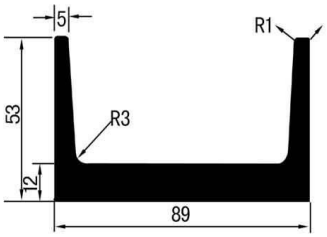

9-3-1-8-044

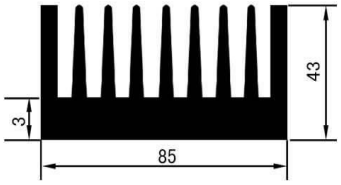

9-3-1-8-029

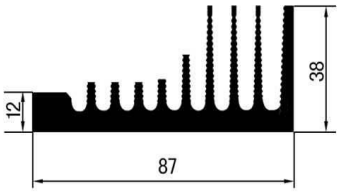

9-3-1-8-037

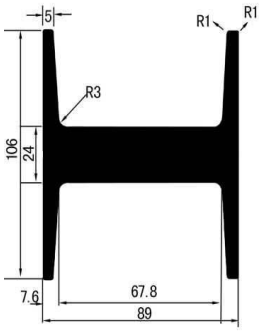

9-3-1-8-045

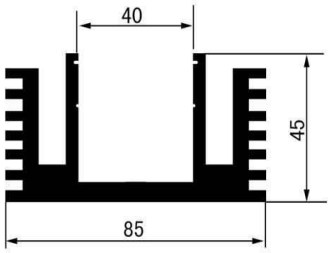

9-3-1-8-030

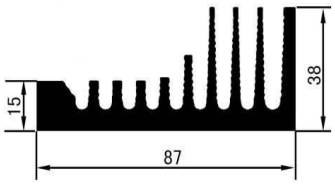

9-3-1-8-038

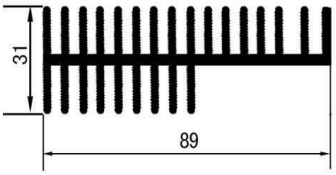

9-3-1-8-046

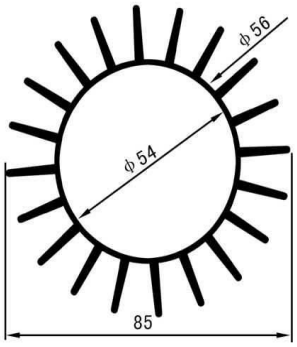

9-3-1-8-031

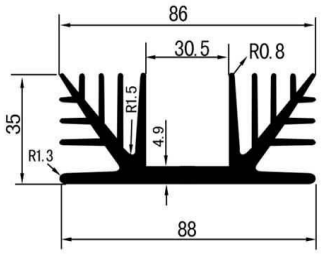

9-3-1-8-039

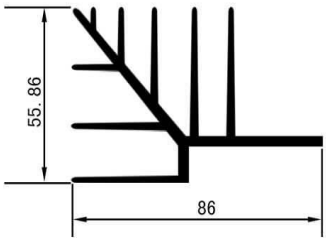

9-3-1-8-032

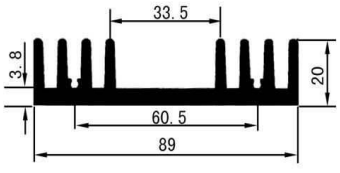

9-3-1-8-040

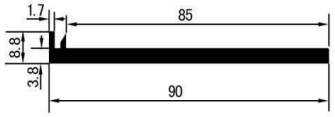

9-3-1-9-001

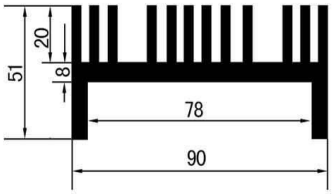

9-3-1-9-009

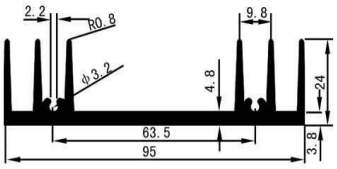

9-3-1-9-017

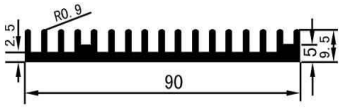

9-3-1-9-002

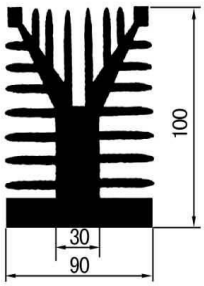

9-3-1-9-010

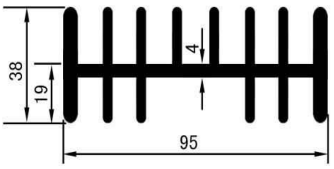

9-3-1-9-018

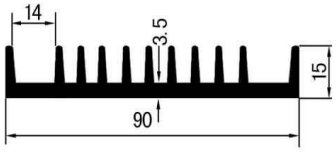

9-3-1-9-003

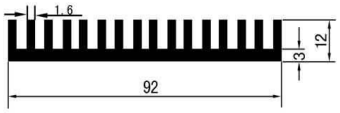

9-3-1-9-011

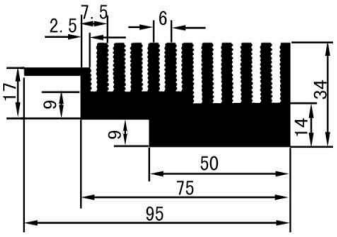

9-3-1-9-019

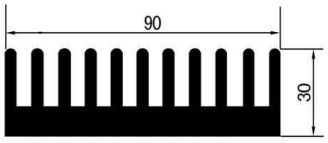

9-3-1-9-004

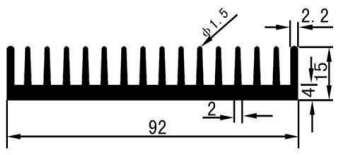

9-3-1-9-012

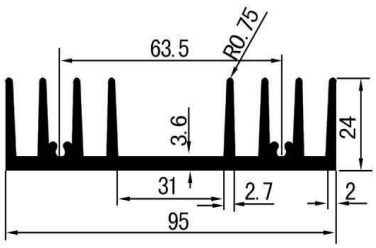

9-3-1-9-020

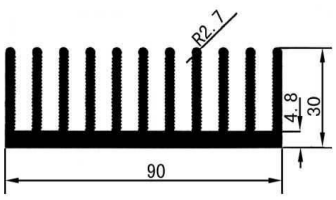

9-3-1-9-005

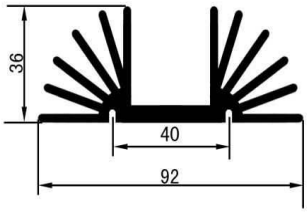

9-3-1-9-013

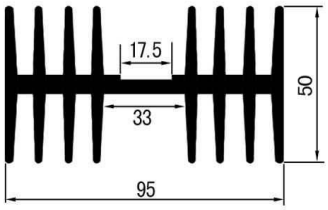

9-3-1-9-021

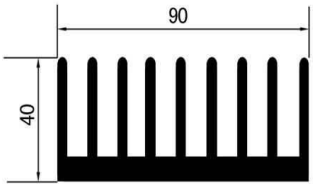

9-3-1-9-006

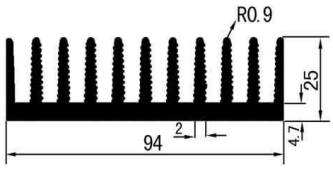

9-3-1-9-014

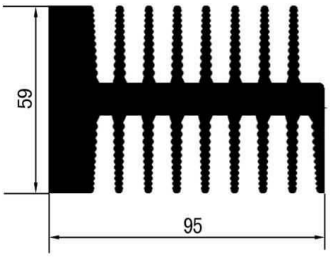

9-3-1-9-022

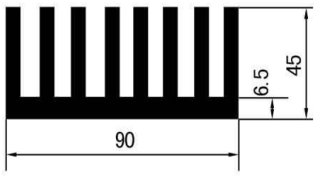

9-3-1-9-007

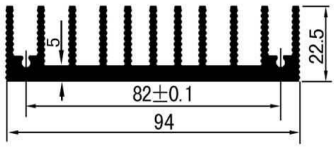

9-3-1-9-015

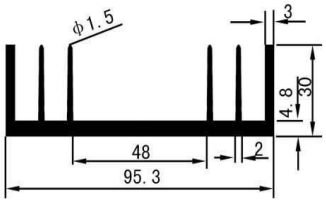

9-3-1-9-023

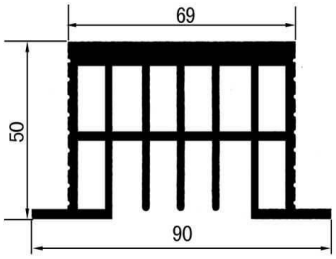

9-3-1-9-008

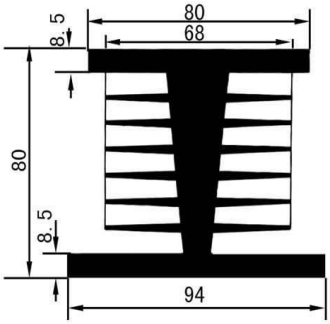

9-3-1-9-016

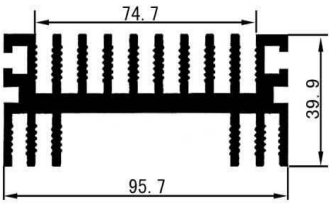

9-3-1-9-024

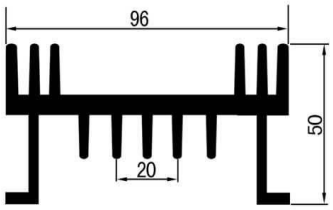

9-3-1-9-025

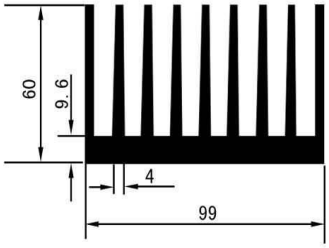

9-3-1-9-033

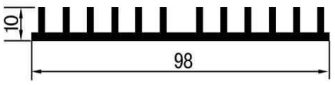

9-3-1-9-029

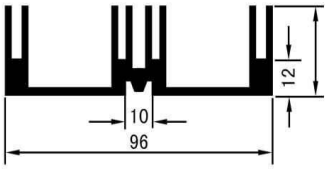

9-3-1-9-026

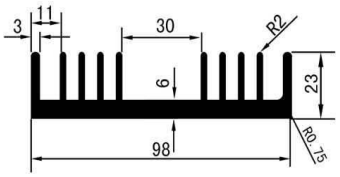

9-3-1-9-030

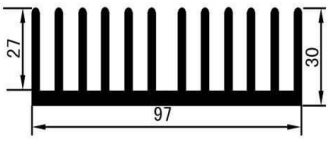

9-3-1-9-027

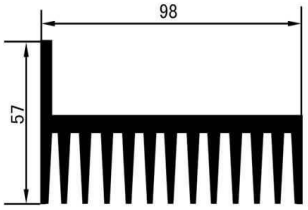

9-3-1-9-031

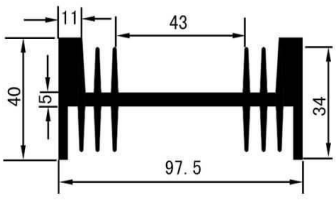

9-3-1-9-028

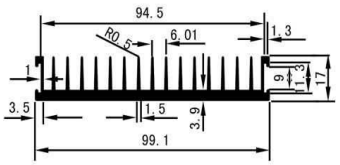

9-3-1-9-032

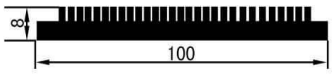

9-3-1-10-001

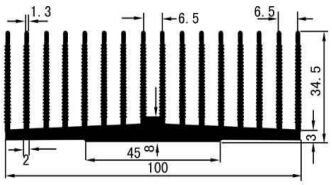

9-3-1-10-009

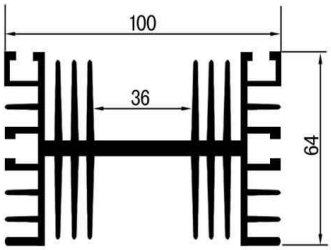

9-3-1-10-017

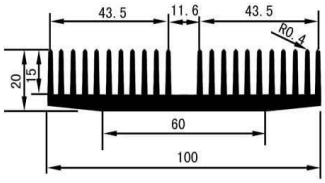

9-3-1-10-002

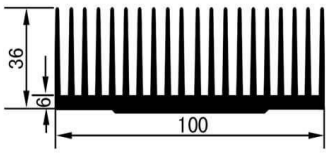

9-3-1-10-010

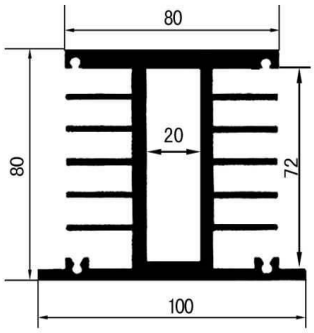

9-3-1-10-018

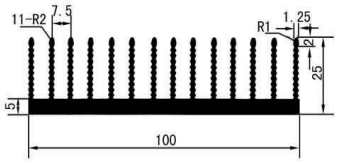

9-3-1-10-003

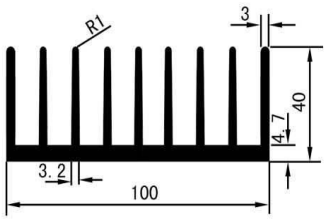

9-3-1-10-011

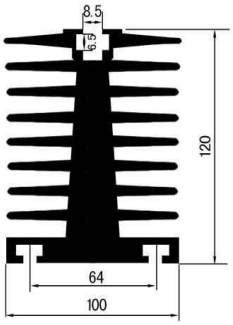

9-3-1-10-019

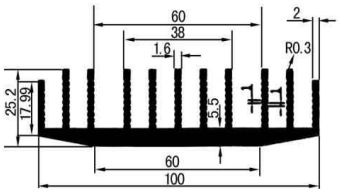

9-3-1-10-004

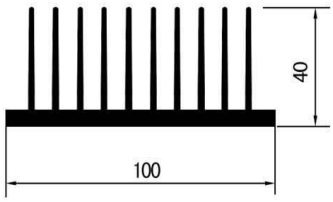

9-3-1-10-012

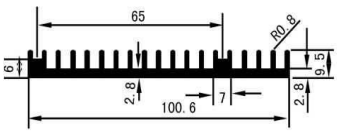

9-3-1-10-020

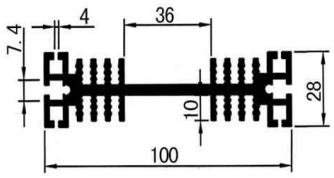

9-3-1-10-005

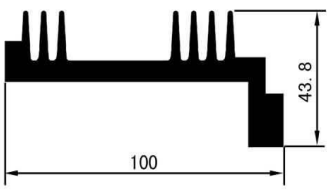

9-3-1-10-013

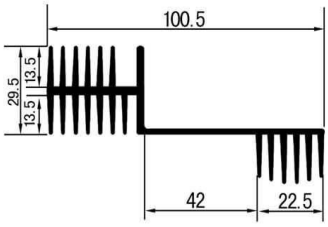

9-3-1-10-021

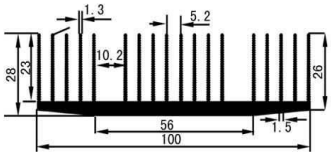

9-3-1-10-006

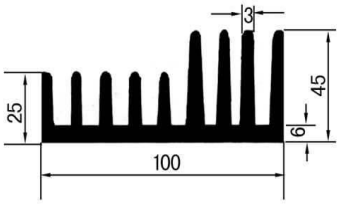

9-3-1-10-014

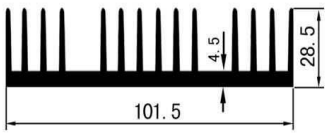

9-3-1-10-022

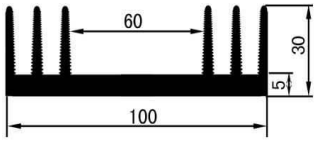

9-3-1-10-007

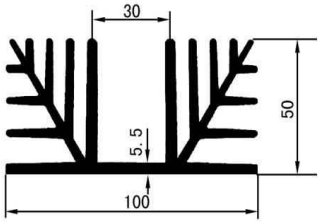

9-3-1-10-015

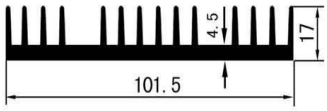

9-3-1-10-023

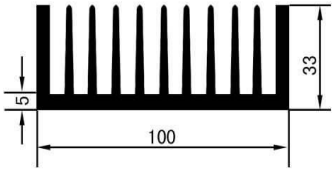

9-3-1-10-008

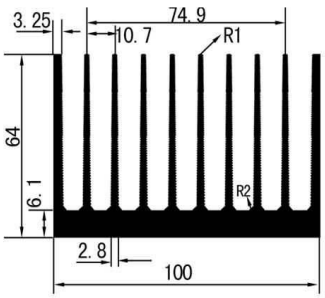

9-3-1-10-016

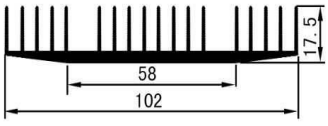

9-3-1-10-024

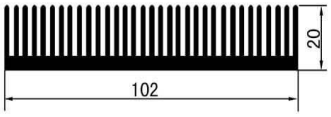

9-3-1-10-025

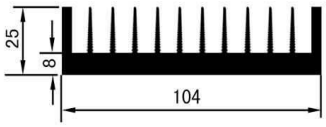

9-3-1-10-033

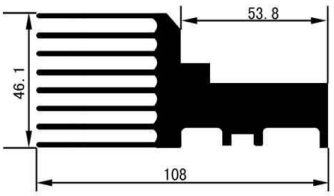

9-3-1-10-041

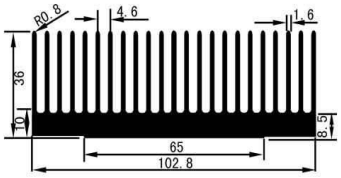

9-3-1-10-026

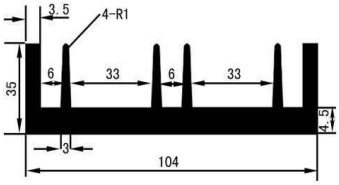

9-3-1-10-034

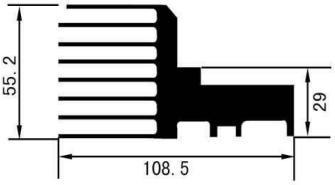

9-3-1-10-042

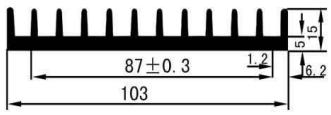

9-3-1-10-027

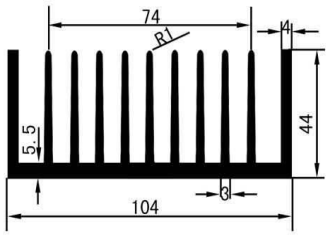

9-3-1-10-035

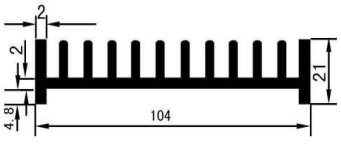

9-3-1-10-028

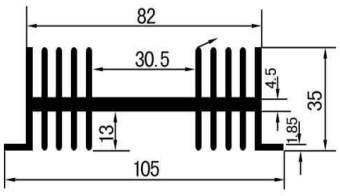

9-3-1-10-036

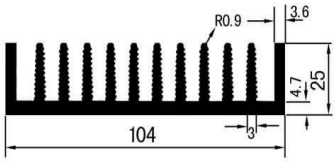

9-3-1-10-029

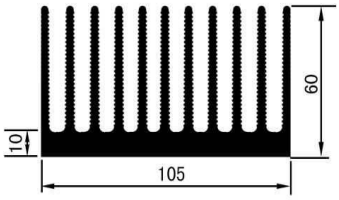

9-3-1-10-037

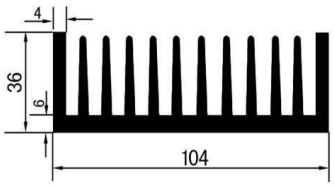

9-3-1-10-030

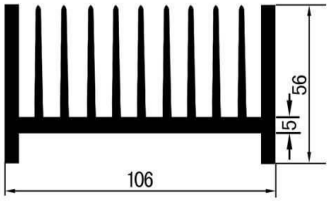

9-3-1-10-038

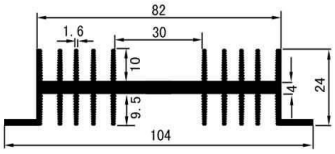

9-3-1-10-031

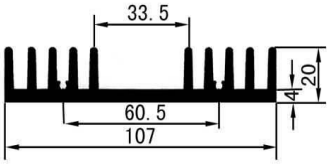

9-3-1-10-039

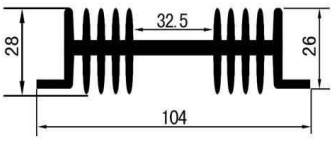

9-3-1-10-032

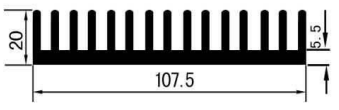

9-3-1-10-040

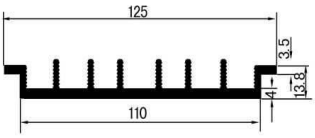

9-3-1-11-001

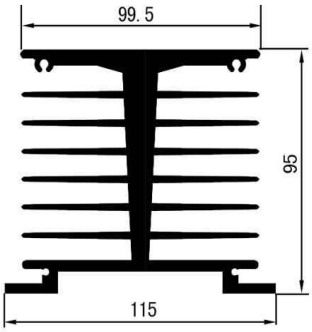

9-3-1-11-009

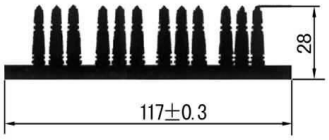

9-3-1-11-017

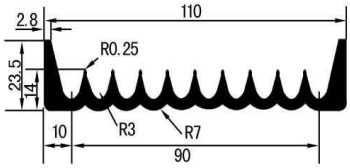

9-3-1-11-002

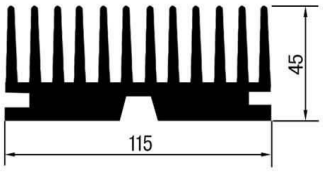

9-3-1-11-010

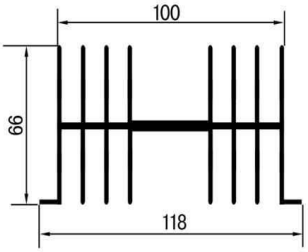

9-3-1-11-018

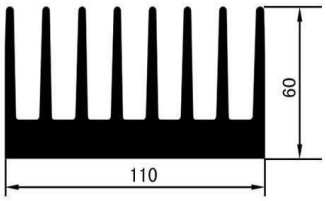

9-3-1-11-003

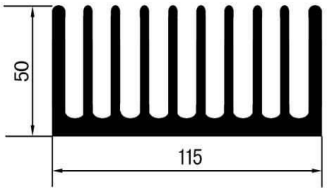

9-3-1-11-011

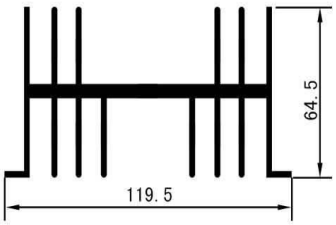

9-3-1-11-019

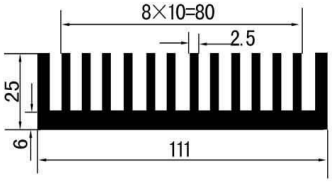

9-3-1-11-004

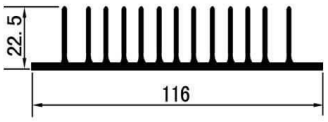

9-3-1-11-012

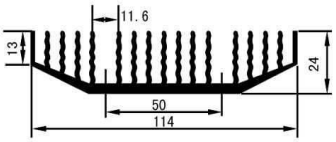

9-3-1-11-005

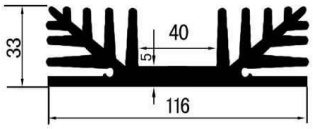

9-3-1-11-013

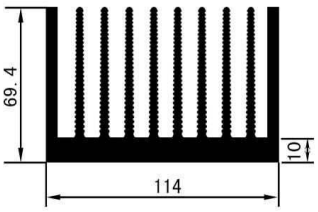

9-3-1-11-006

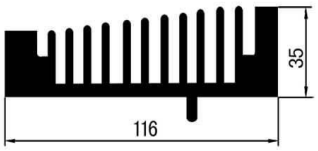

9-3-1-11-014

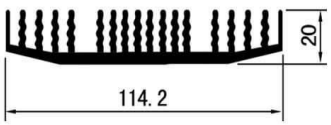

9-3-1-11-007

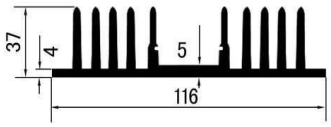

9-3-1-11-015

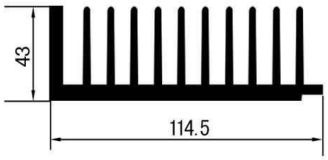

9-3-1-11-008

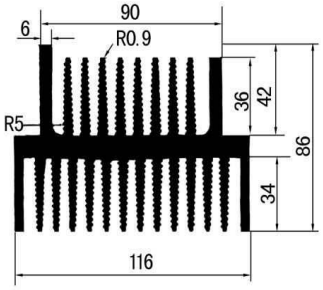

9-3-1-11-016

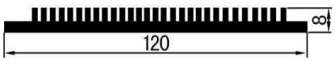

9-3-1-12-001

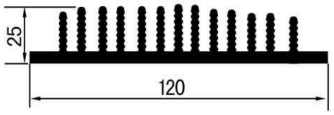

9-3-1-12-009

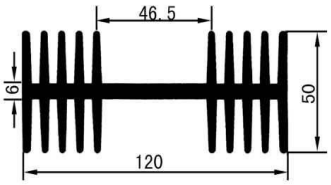

9-3-1-12-017

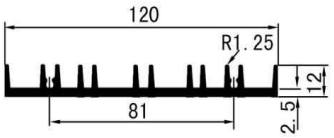

9-3-1-12-002

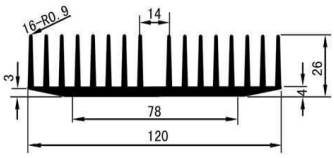

9-3-1-12-010

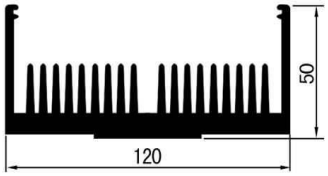

9-3-1-12-018

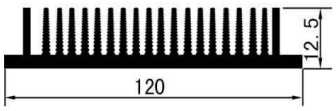

9-3-1-12-003

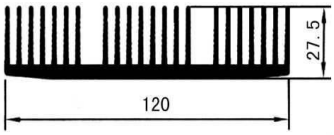

9-3-1-12-011

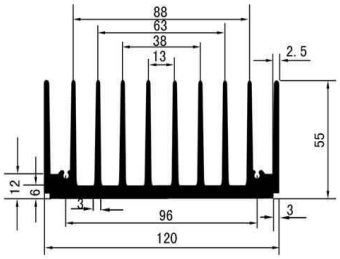

9-3-1-12-019

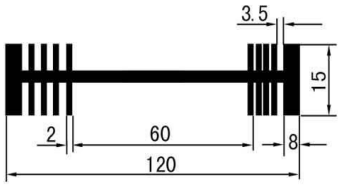

9-3-1-12-004

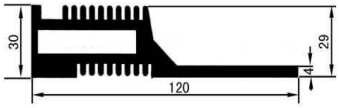

9-3-1-12-012

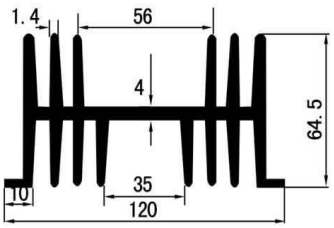

9-3-1-12-020

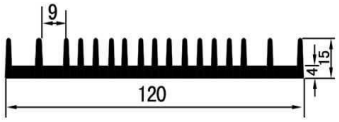

9-3-1-12-005

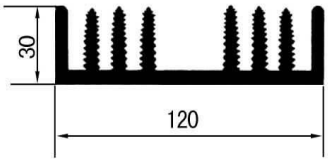

9-3-1-12-013

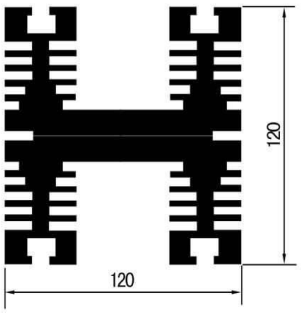

9-3-1-12-021

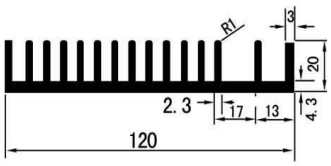

9-3-1-12-006

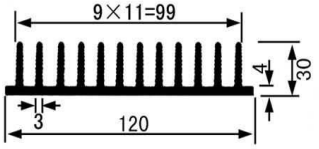

9-3-1-12-014

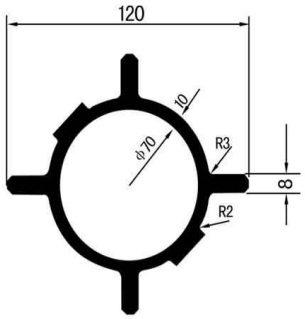

9-3-1-12-022

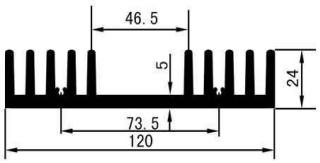

9-3-1-12-007

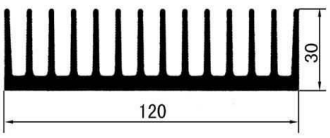

9-3-1-12-015

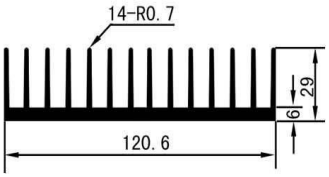

9-3-1-12-023

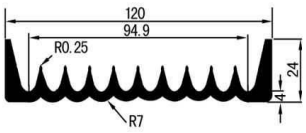

9-3-1-12-008

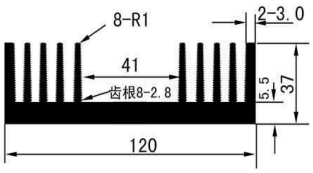

9-3-1-12-016

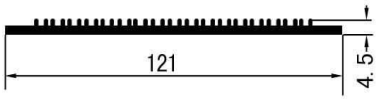

9-3-1-12-024

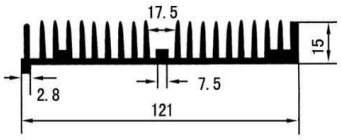

9-3-1-12-025

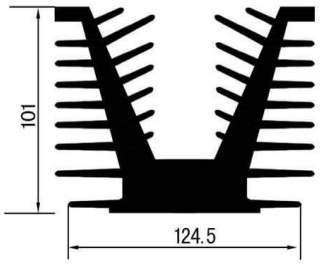

9-3-1-12-033

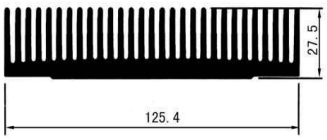

9-3-1-12-041

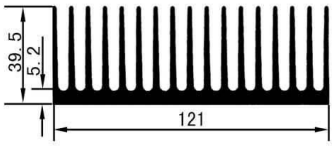

9-3-1-12-026

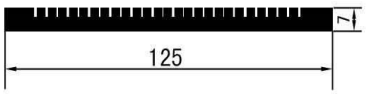

9-3-1-12-034

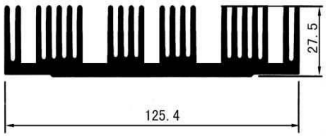

9-3-1-12-042

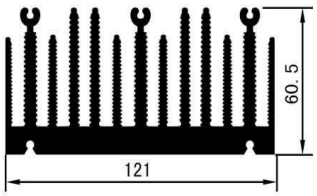

9-3-1-12-027

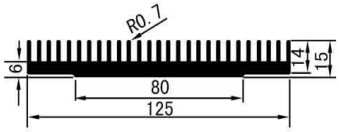

9-3-1-12-035

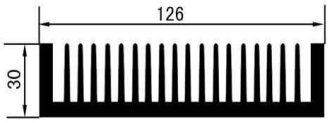

9-3-1-12-043

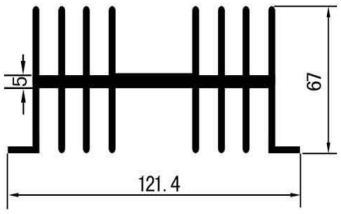

9-3-1-12-028



9-3-1-12-036

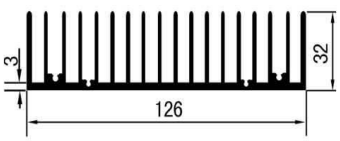

9-3-1-12-044

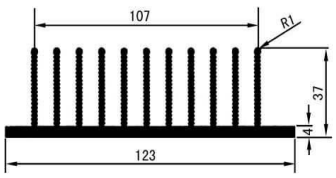

9-3-1-12-029

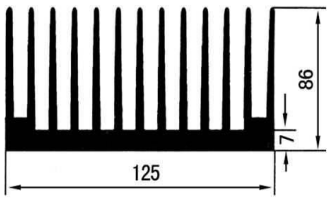

9-3-1-12-037

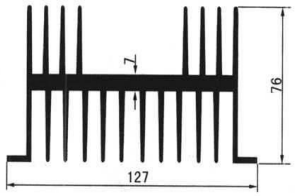

9-3-1-12-045

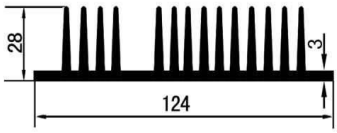

9-3-1-12-030

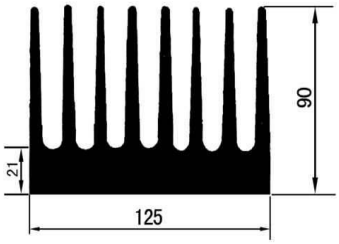

9-3-1-12-038

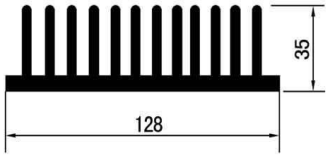

9-3-1-12-046

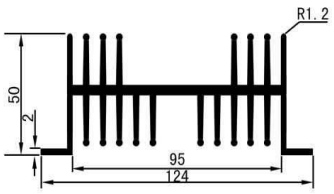

9-3-1-12-031

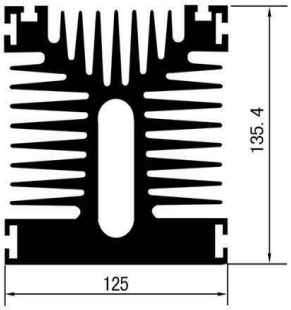

9-3-1-12-039

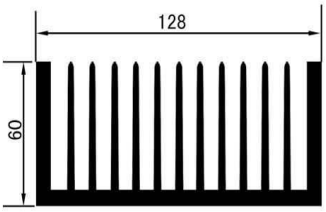

9-3-1-12-047

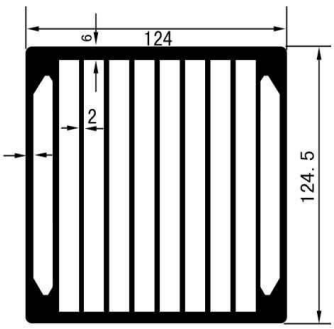

9-3-1-12-032

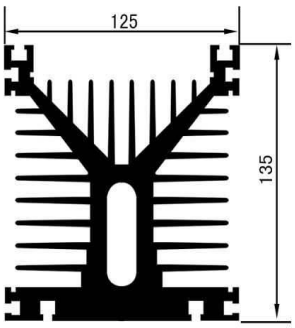

9-3-1-12-040

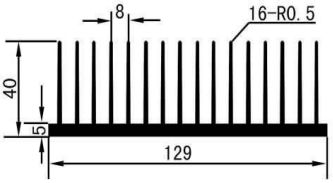

9-3-1-12-048

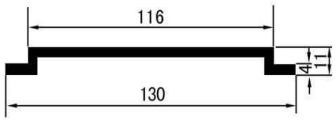

9-3-1-13-001

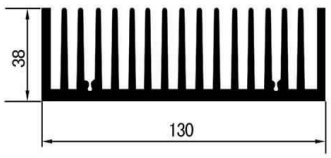

9-3-1-13-009

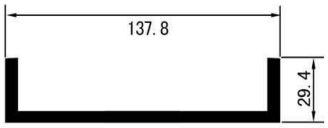

9-3-1-13-017

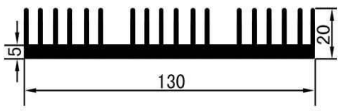

9-3-1-13-002

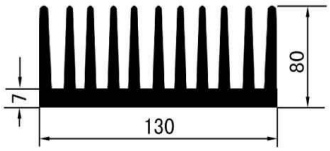

9-3-1-13-010

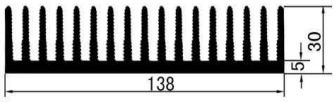

9-3-1-13-018

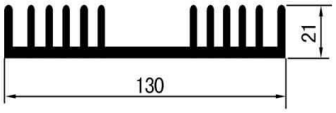

9-3-1-13-003

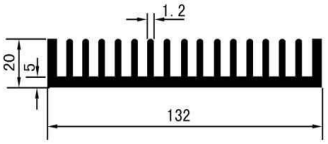

9-3-1-13-011

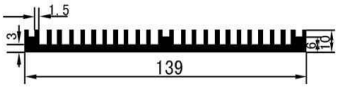

9-3-1-13-019

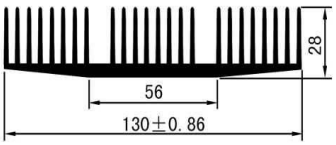

9-3-1-13-004

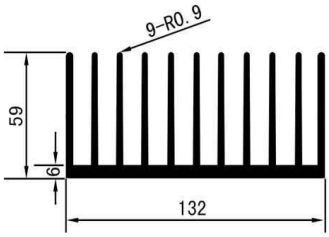

9-3-1-13-012

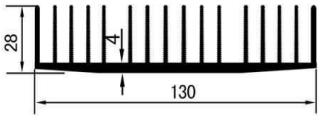

9-3-1-13-005

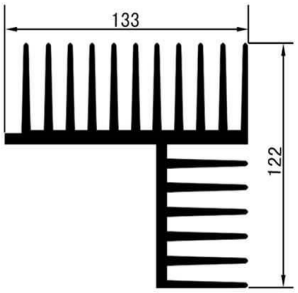

9-3-1-13-013

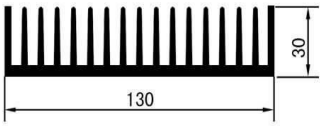

9-3-1-13-006

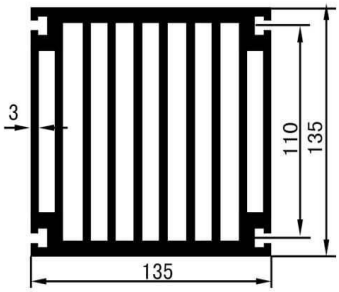

9-3-1-13-014

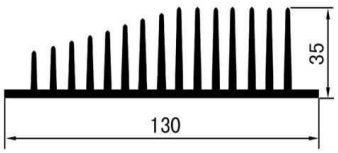

9-3-1-13-007

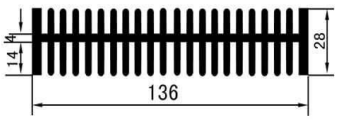

9-3-1-13-015

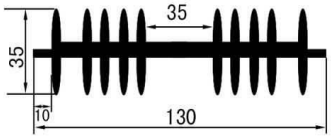

9-3-1-13-008

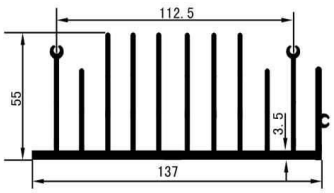

9-3-1-13-016

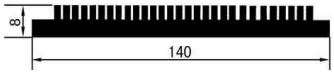

9-3-1-14-001

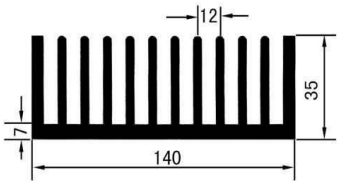

9-3-1-14-009

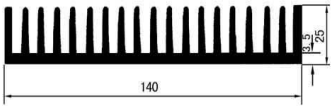

9-3-1-14-002

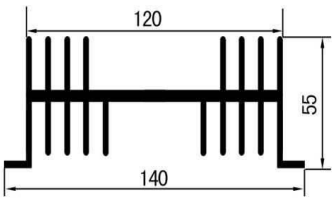

9-3-1-14-010

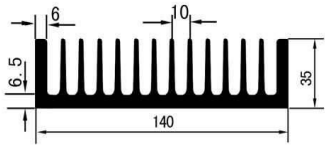

9-3-1-14-003

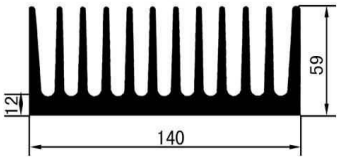

9-3-1-14-011

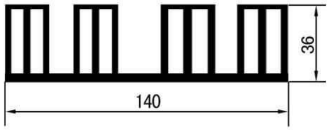

9-3-1-14-004

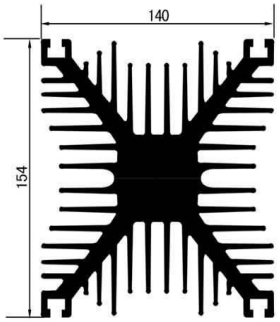

9-3-1-14-012

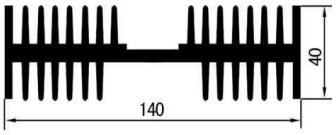

9-3-1-14-005

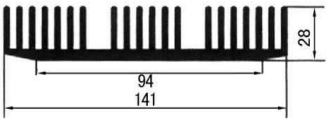

9-3-1-14-013

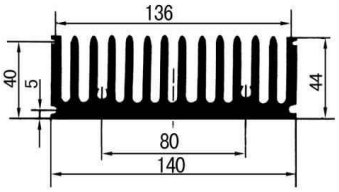

9-3-1-14-006

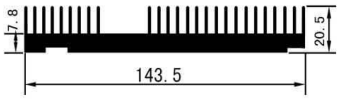

9-3-1-14-014

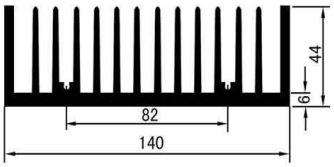

9-3-1-14-007

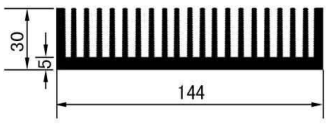

9-3-1-14-015

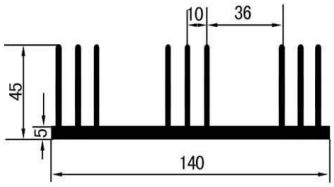

9-3-1-14-008

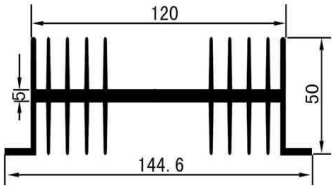

9-3-1-14-016

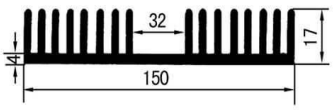

9-3-1-15-001

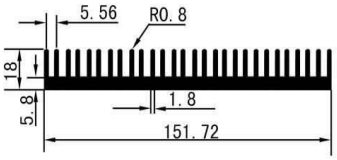

9-3-1-15-009

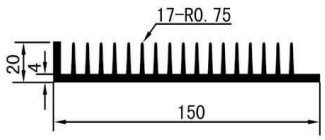

9-3-1-15-002

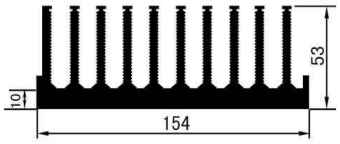

9-3-1-15-010

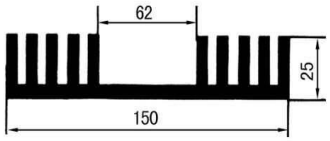

9-3-1-15-003

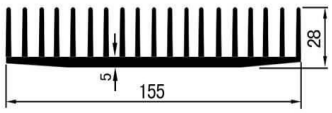

9-3-1-15-011

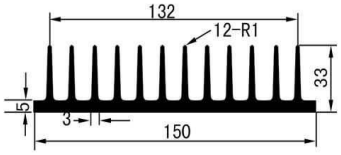

9-3-1-15-004

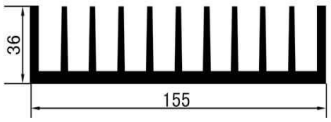

9-3-1-15-012

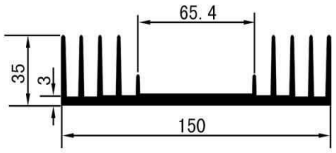

9-3-1-15-005

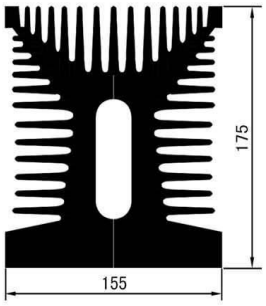

9-3-1-15-013

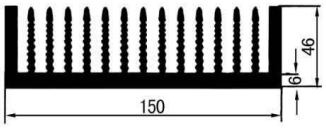

9-3-1-15-006

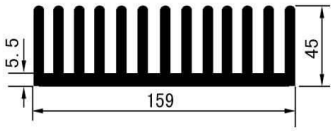

9-3-1-15-014

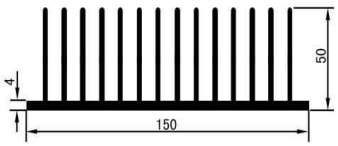

9-3-1-15-007

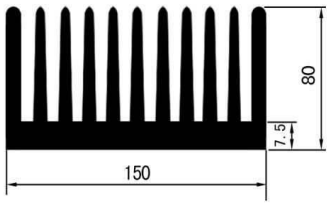

9-3-1-15-008

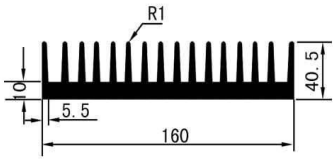

9-3-1-16-001

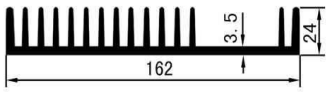

9-3-1-16-009

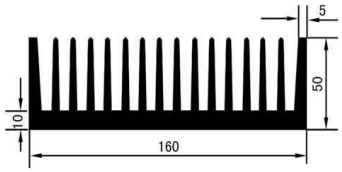

9-3-1-16-002

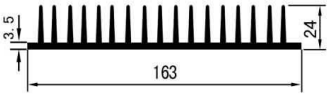

9-3-1-16-010

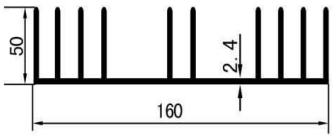

9-3-1-16-003

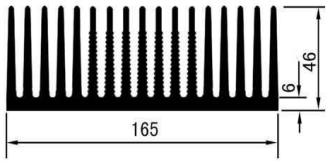

9-3-1-16-011

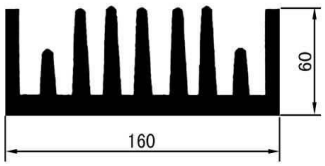

9-3-1-16-004

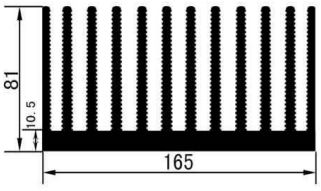

9-3-1-16-012

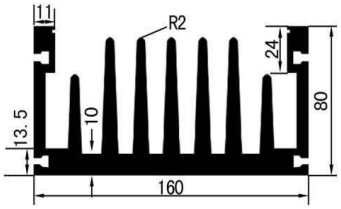

9-3-1-16-005

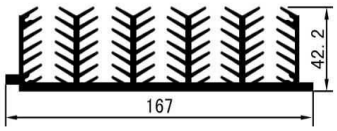

9-3-1-16-013

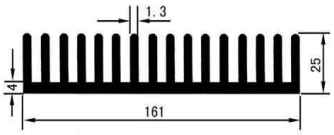

9-3-1-16-006

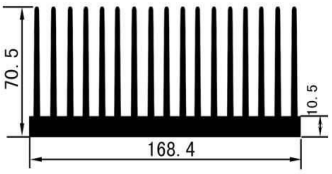

9-3-1-16-014

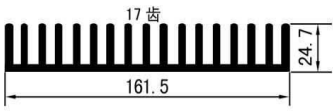

9-3-1-16-007

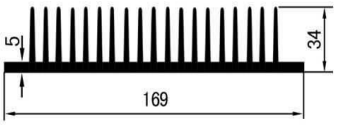

9-3-1-16-015

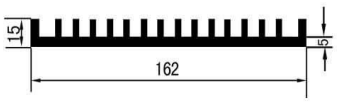

9-3-1-16-008

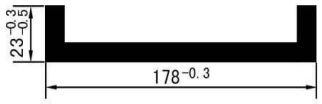

9-3-1-17-001

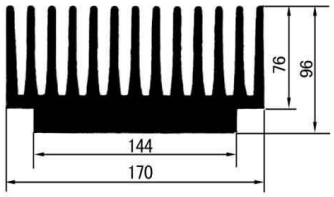

9-3-1-17-009

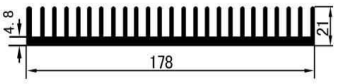

9-3-1-17-017

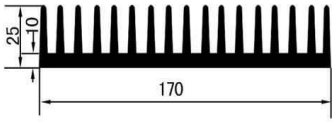

9-3-1-17-002

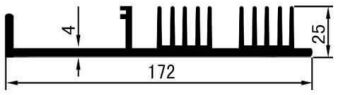

9-3-1-17-010

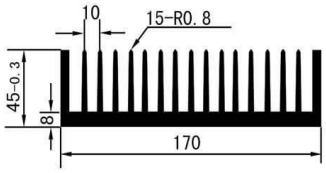

9-3-1-17-003

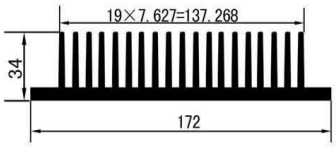

9-3-1-17-011

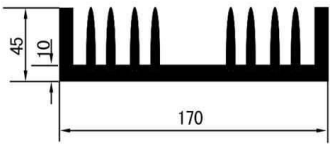

9-3-1-17-004

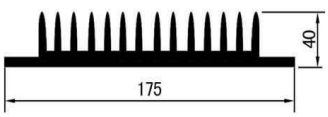

9-3-1-17-012

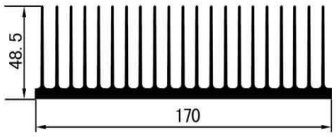

9-3-1-17-005

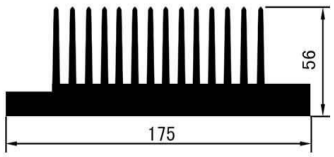

9-3-1-17-013

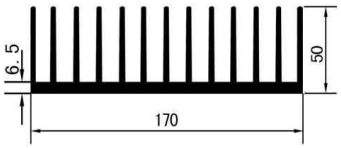

9-3-1-17-006

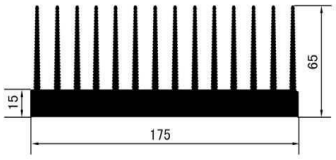

9-3-1-17-014

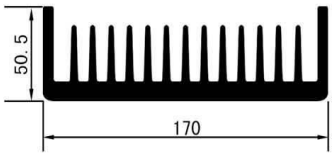

9-3-1-17-007

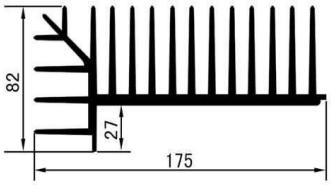

9-3-1-17-015

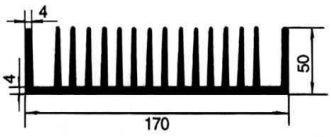

9-3-1-17-008

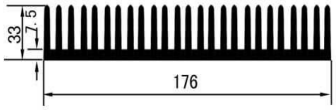

9-3-1-17-016

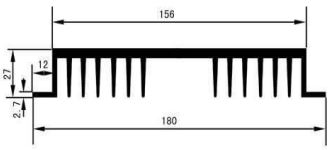

9-3-1-18-001

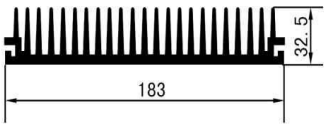

9-3-1-18-009

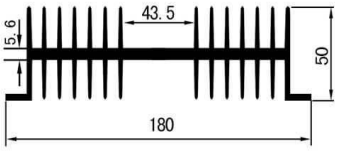

9-3-1-18-002

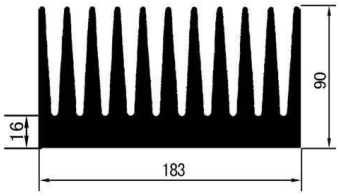

9-3-1-18-010

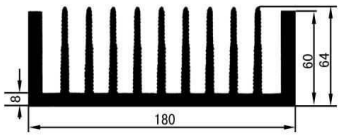

9-3-1-18-003

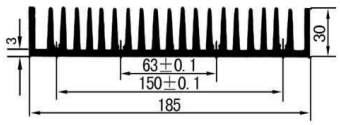

9-3-1-18-011

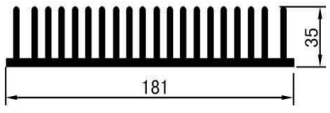

9-3-1-18-004

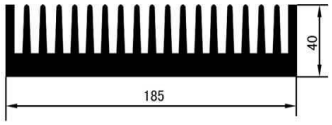

9-3-1-18-012



9-3-1-18-005

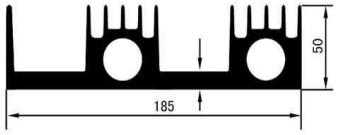

9-3-1-18-013

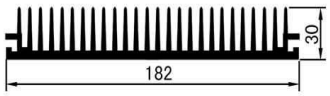

9-3-1-18-006

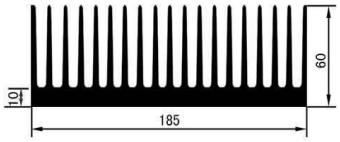

9-3-1-18-014

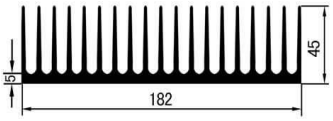

9-3-1-18-007

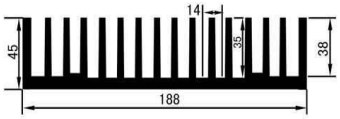

9-3-1-18-015

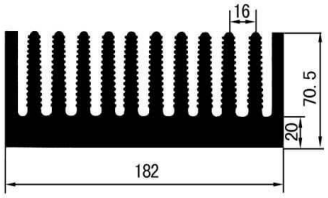

9-3-1-18-008

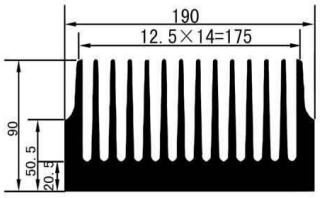

9-3-1-19-001

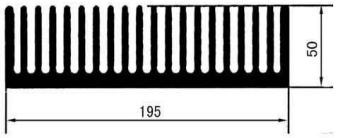

9-3-1-19-005

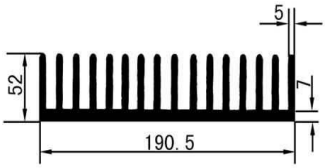

9-3-1-19-002

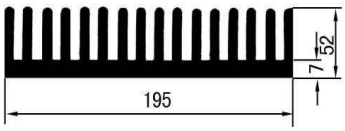

9-3-1-19-006

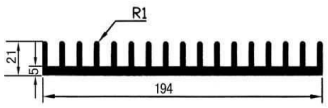

9-3-1-19-003

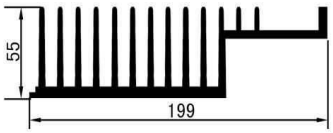

9-3-1-19-007

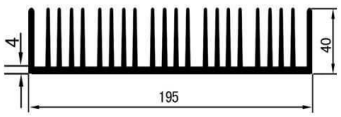

9-3-1-19-004

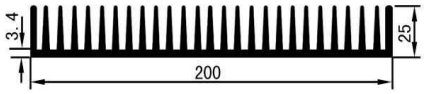

9-3-1-20-001

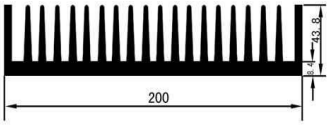

9-3-1-20-005

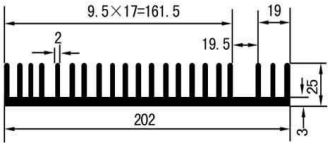

9-3-1-20-009

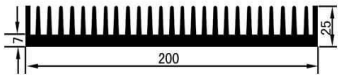

9-3-1-20-002

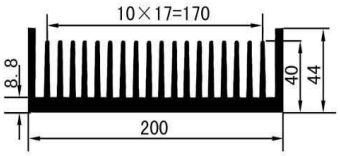

9-3-1-20-006

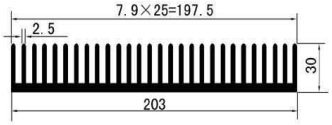

9-3-1-20-010

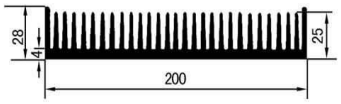

9-3-1-20-003

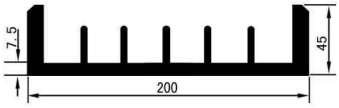

9-3-1-20-007

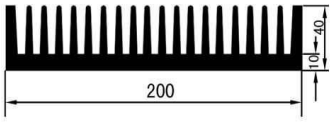

9-3-1-20-004

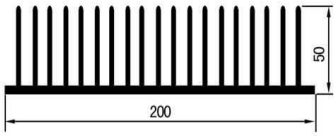

9-3-1-20-008

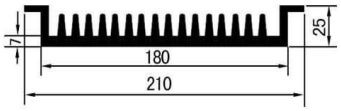

9-3-1-21-001

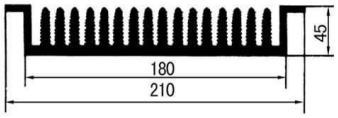

9-3-1-21-002

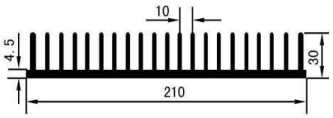

9-3-1-21-003

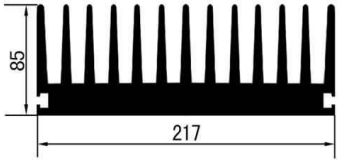

9-3-1-21-004

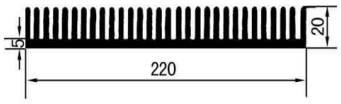

9-3-1-22-001

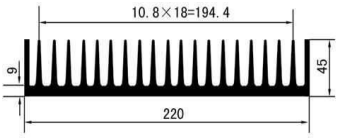

9-3-1-22-005

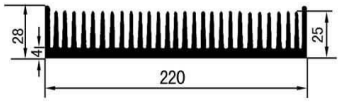

9-3-1-22-002

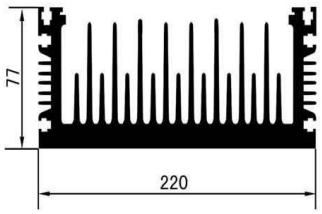

9-3-1-22-006

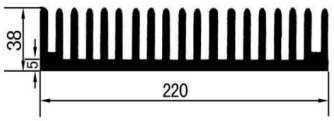

9-3-1-22-003

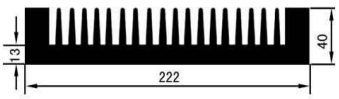

9-3-1-22-007

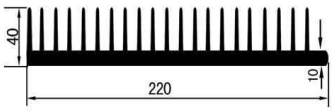

9-3-1-22-004

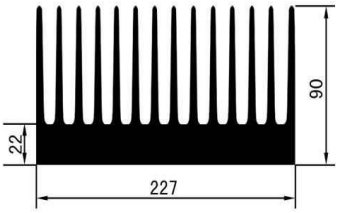

9-3-1-22-008

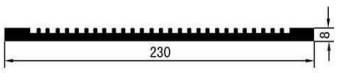

9-3-1-23-001

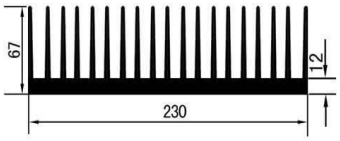

9-3-1-23-005

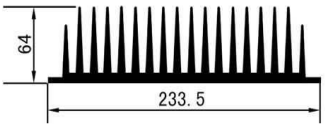

9-3-1-23-009

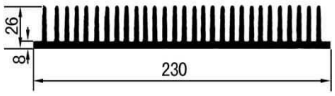

9-3-1-23-002

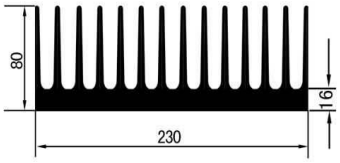

9-3-1-23-006

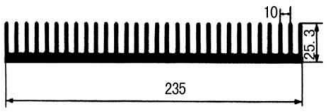

9-3-1-23-010

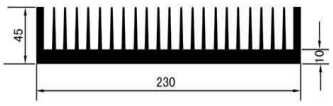

9-3-1-23-003

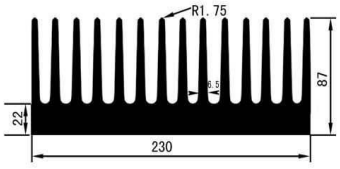

9-3-1-23-007

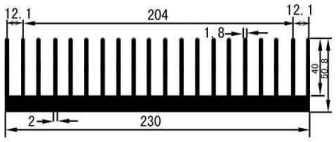

9-3-1-23-004

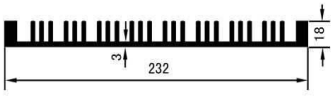

9-3-1-23-008

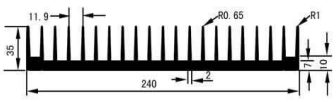

9-3-1-24-001

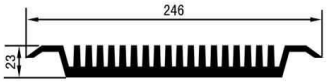

9-3-1-24-005

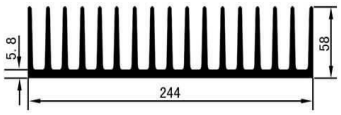

9-3-1-24-002

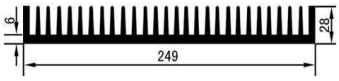

9-3-1-24-006

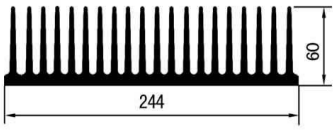

9-3-1-24-003



9-3-1-24-004

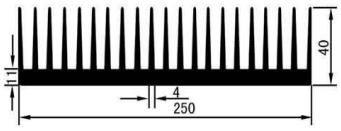

9-3-1-25-001

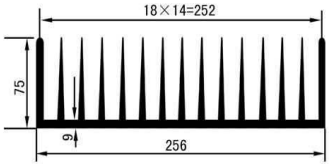

9-3-1-25-005

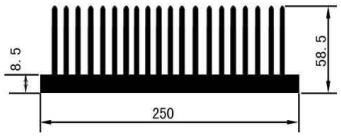

9-3-1-25-002

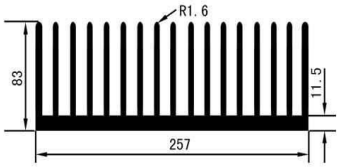

9-3-1-25-006

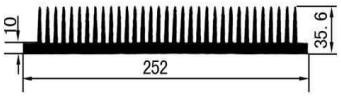

9-3-1-25-003

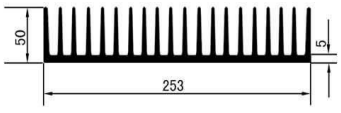

9-3-1-25-004

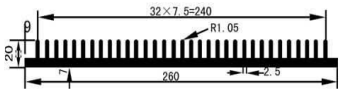

9-3-1-26-001

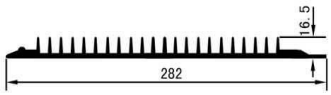

9-3-1-28-001

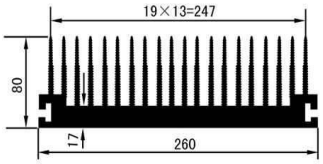

9-3-1-26-002

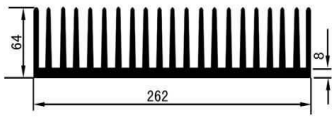

9-3-1-26-003

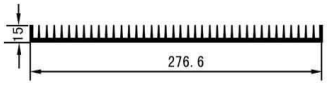

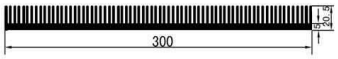

9-3-1-30-001

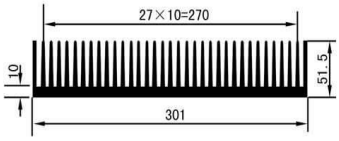

9-3-1-30-005

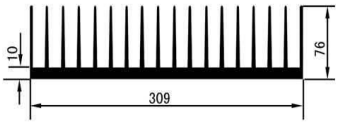

9-3-1-30-009

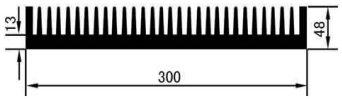

9-3-1-30-002

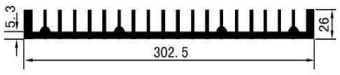

9-3-1-30-006

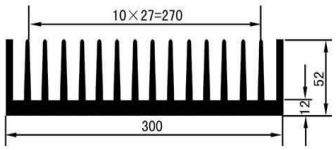

9-3-1-30-003

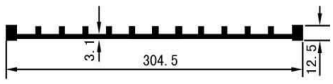

9-3-1-30-007

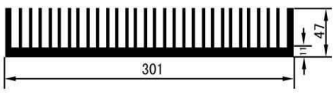

9-3-1-30-004



9-3-1-30-008

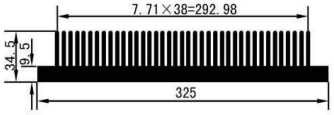

9-3-1-32-001

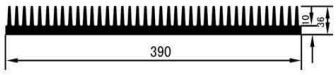

9-3-1-39-001



9-3-1-32-002

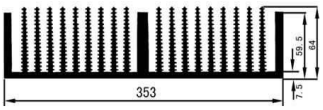

9-3-1-35-001

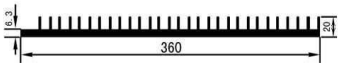

9-3-1-36-001

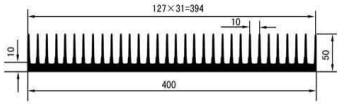

9-3-1-40-001



9-3-1-41-002

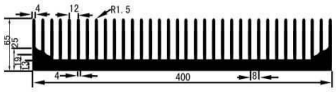

9-3-1-40-002

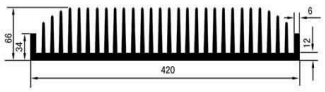

9-3-1-42-001

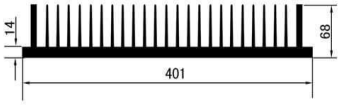

9-3-1-40-003

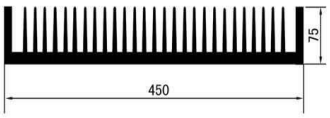

9-3-1-45-001



9-3-1-41-001

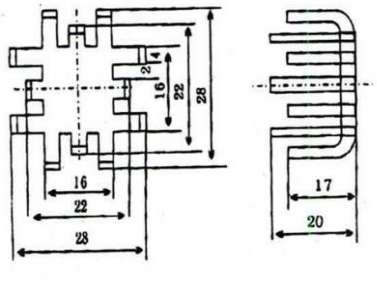

9-3-2-001

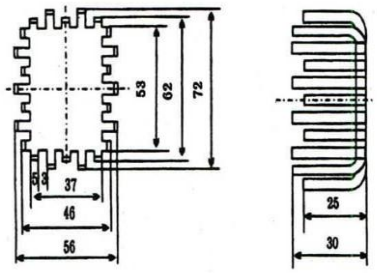

9-3-2-009

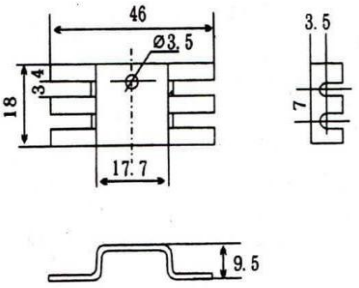

9-3-2-017

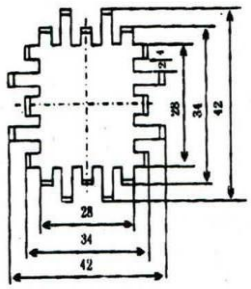

9-3-2-002

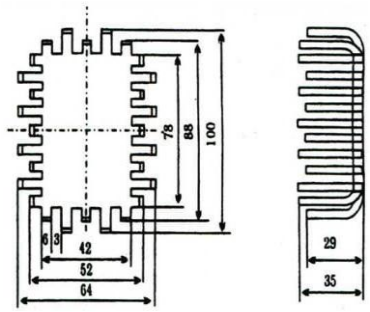

9-3-2-010

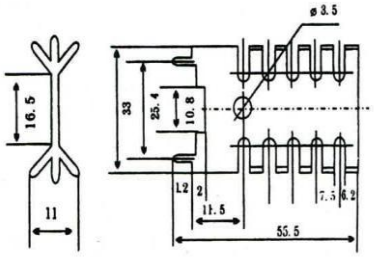

9-3-2-018

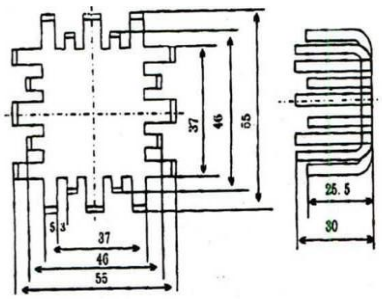

9-3-2-003

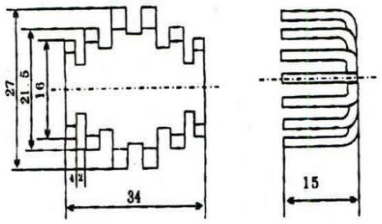

9-3-2-011

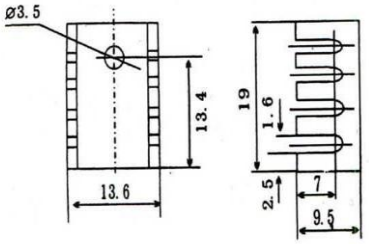

9-3-2-019

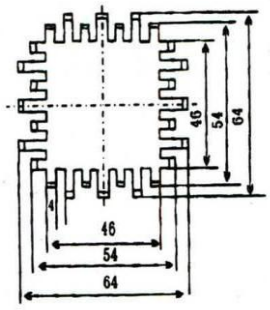

9-3-2-004

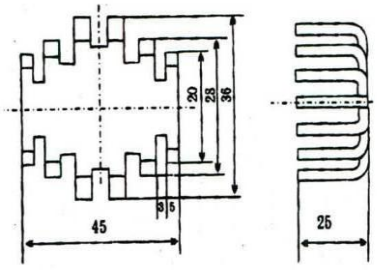

9-3-2-012

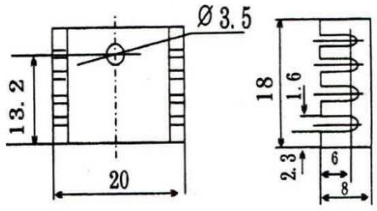

9-3-2-020

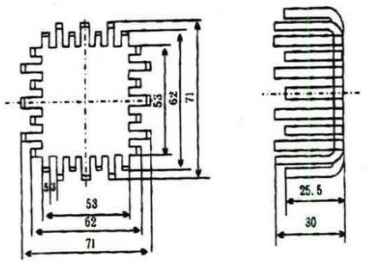

9-3-2-005

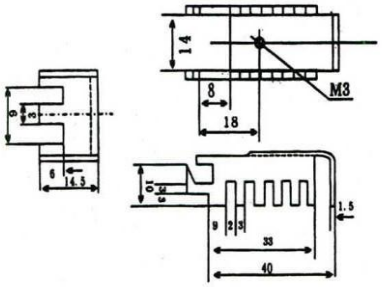

9-3-2-013

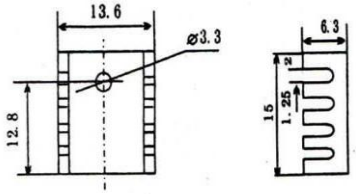

9-3-2-021

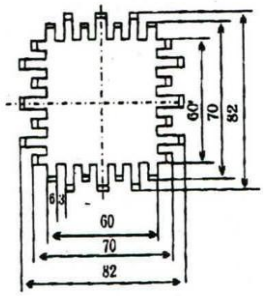

9-3-2-006

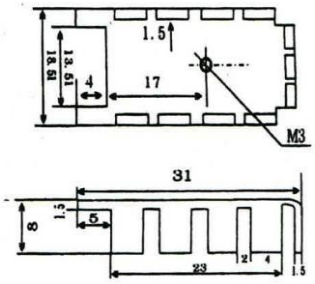

9-3-2-014

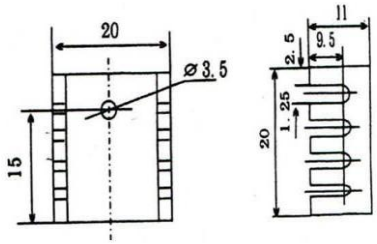

9-3-2-022

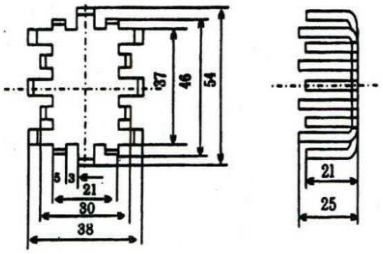

9-3-2-007

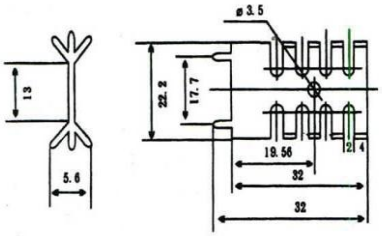

9-3-2-015

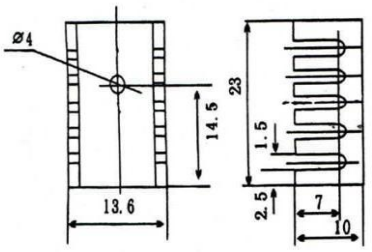

9-3-2-023

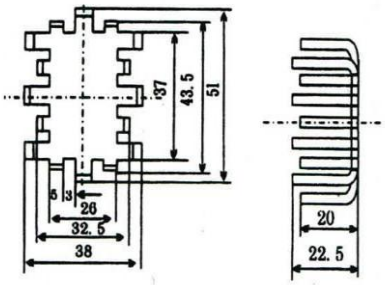

9-3-2-008

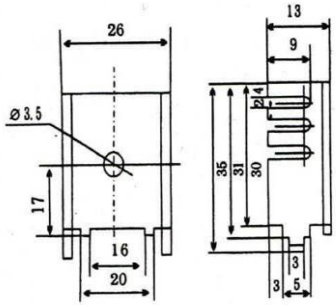

9-3-2-016

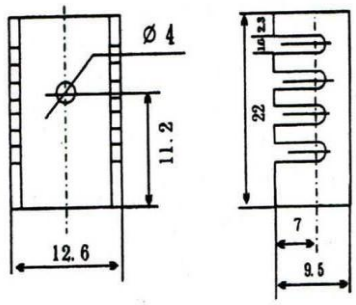

9-3-2-024

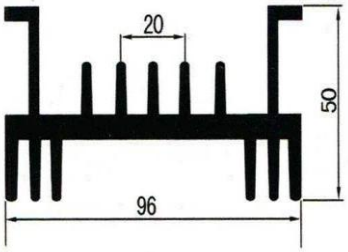

9-3-3-001

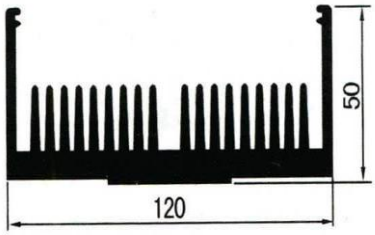

9-3-3-009

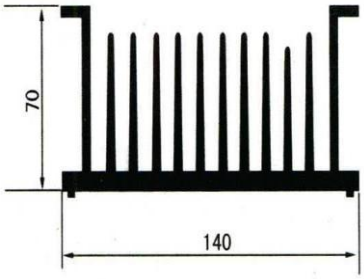

9-3-3-017

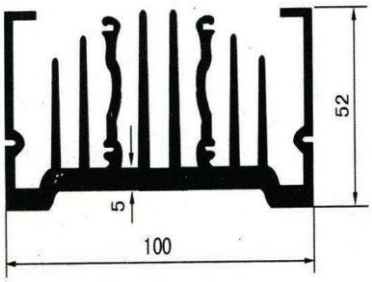

9-3-3-002

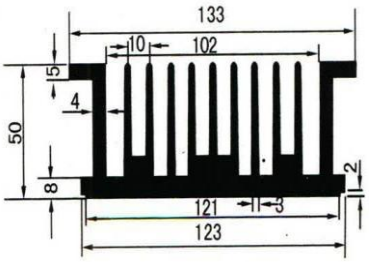

9-3-3-010

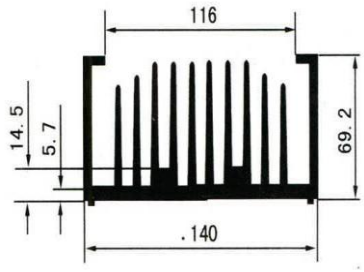

9-3-3-018

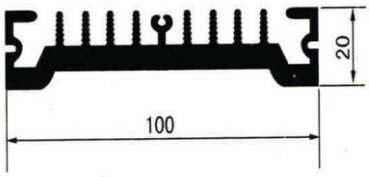

9-3-3-003

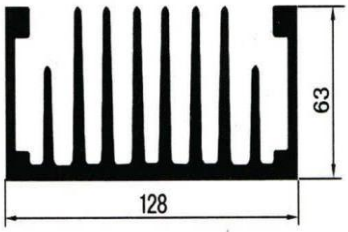

9-3-3-011

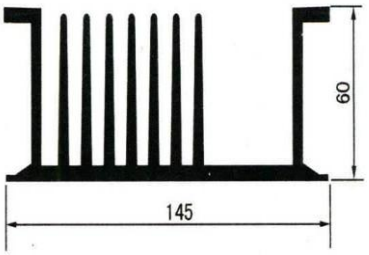

9-3-3-019

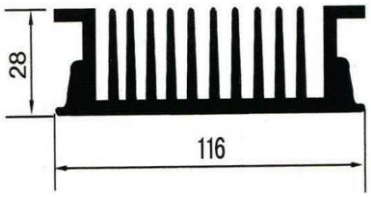

9-3-3-004

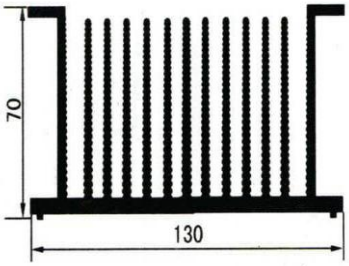

9-3-3-012

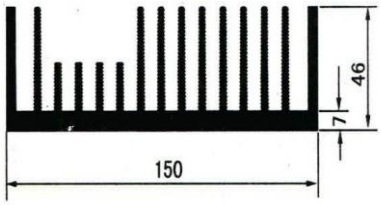

9-3-3-020

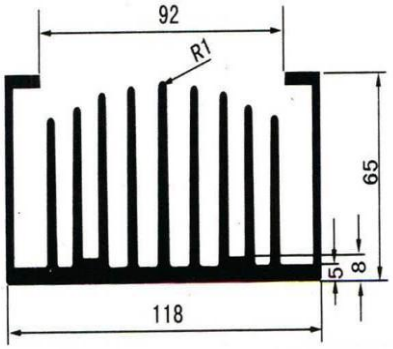

9-3-3-005

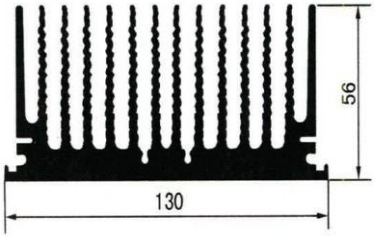

9-3-3-013

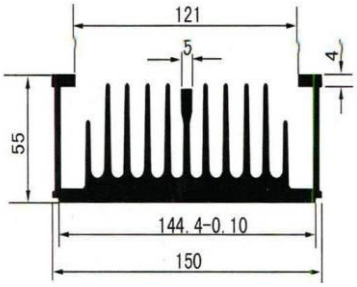

9-3-3-021

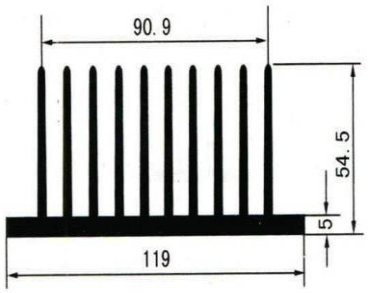

9-3-3-006

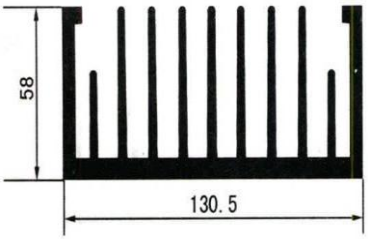

9-3-3-014

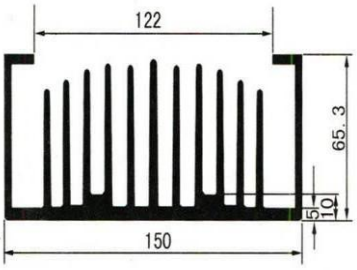

9-3-3-022

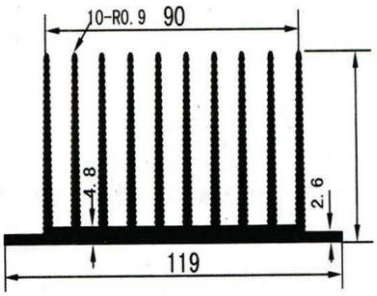

9-3-3-007

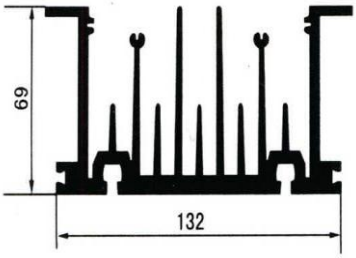

9-3-3-015

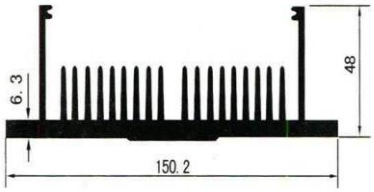

9-3-3-023

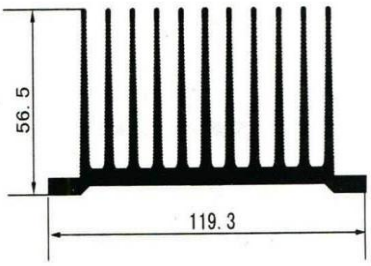

9-3-3-008

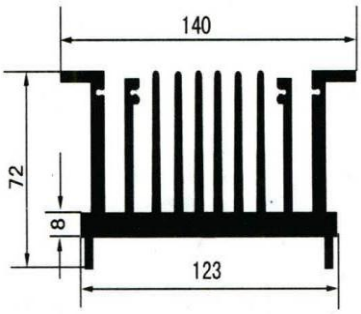

9-3-3-016

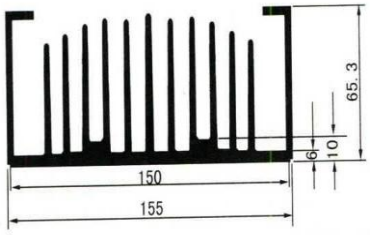

9-3-3-024

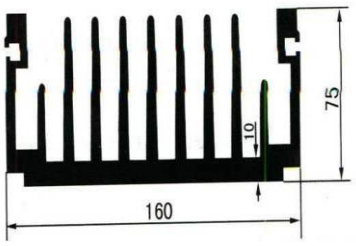

9-3-3-025

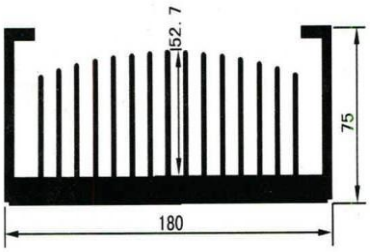

9-3-3-033

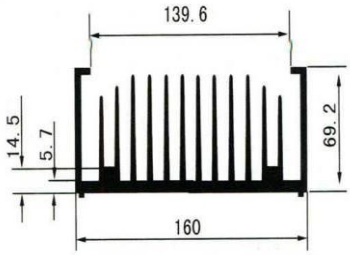

9-3-3-026

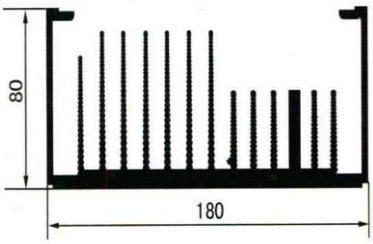

9-3-3-034

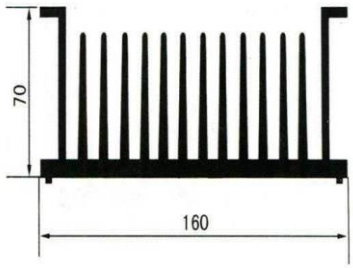

9-3-3-027

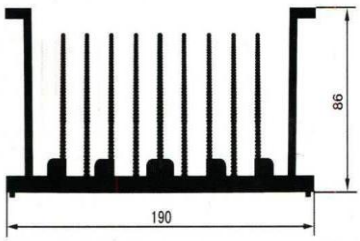

9-3-3-035

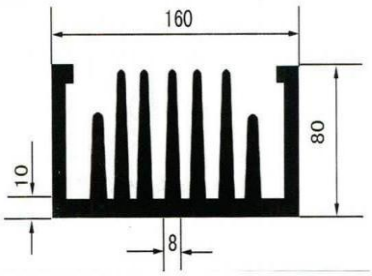

9-3-3-028

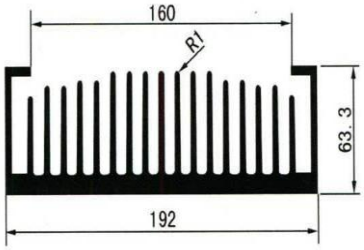

9-3-3-036

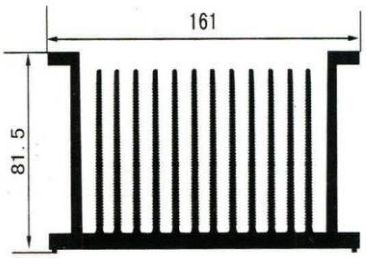

9-3-3-029

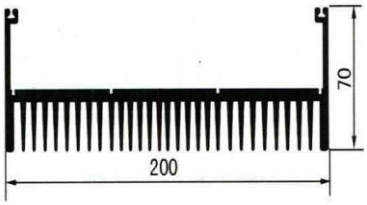

9-3-3-037

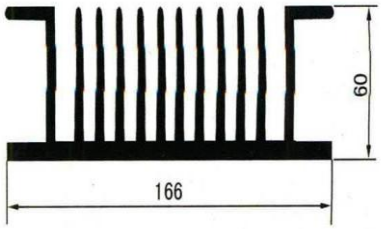

9-3-3-030

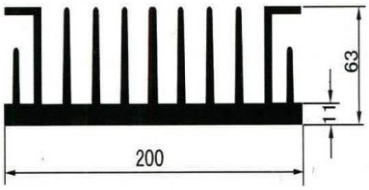

9-3-3-038

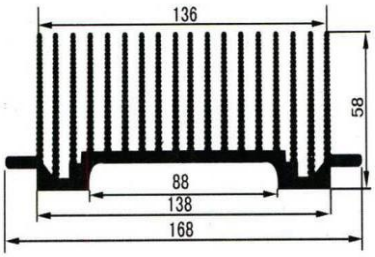

9-3-3-031

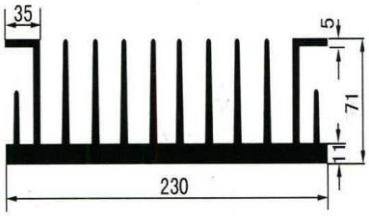

9-3-3-039

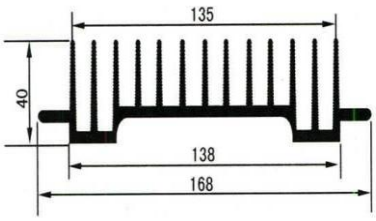

9-3-3-032

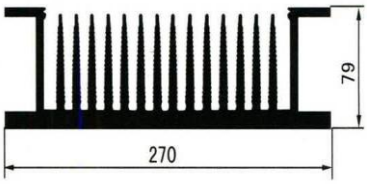

9-3-3-040

KLS

10-Active Components-Активные компоненты

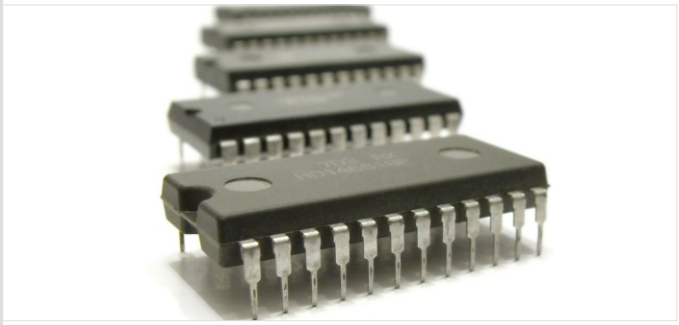

10-1 Diodes
10-2 Transistors
10-3 Thyristors and triacs
10-4 Bridge rectifiers and module

More . . .